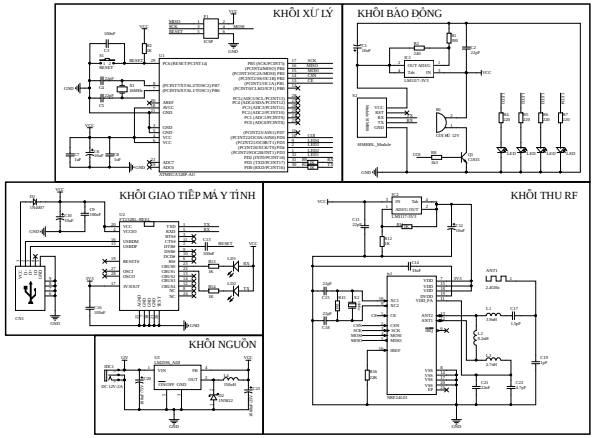

Title			
Size: A4	Number		Revision
Date: 2020/12/27		Sheet of	
File: C:\Users\Admin\Desktop\Untitled.sch		Drawn By:	