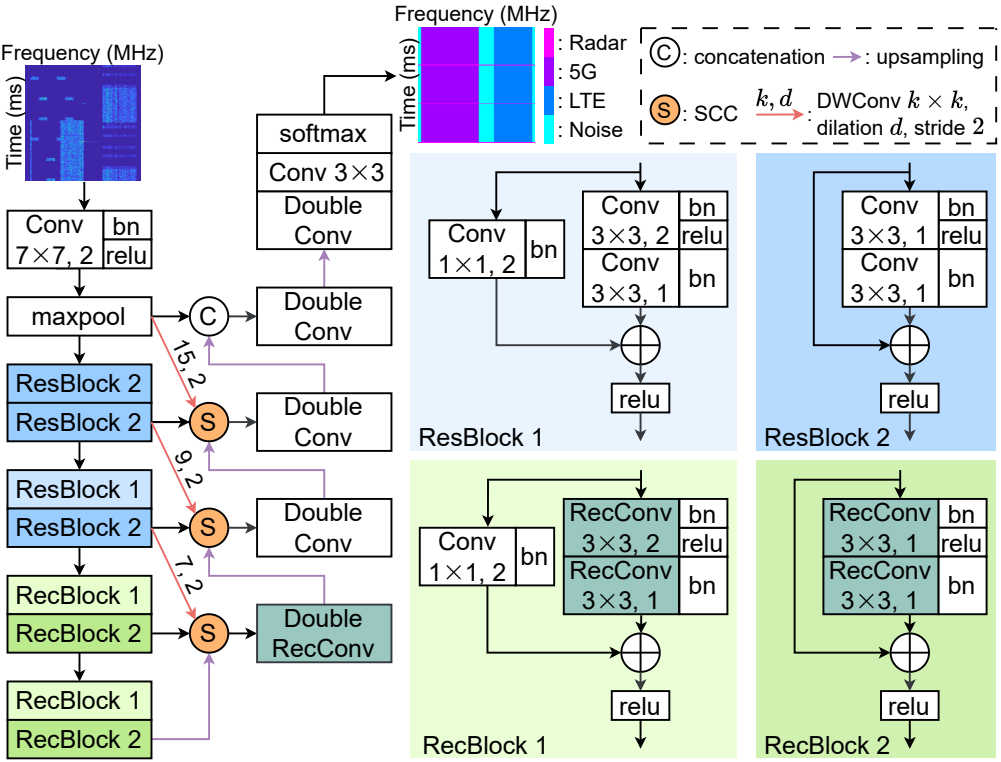
Frequency (MHz)
Time (ms)
Conv 7×7, 2
bn
relu
maxpool
ResBlock 2
ResBlock 2
ResBlock 1
ResBlock 2
RecBlock 1
RecBlock 2
RecBlock 1
RecBlock 2
15, 2
9, 2
7, 2
C
S
S
S
softmax
Conv 3×3
Double Conv
Double Conv
Double Conv
Double RecConv
Frequency (MHz)
Time (ms)
: Radar
: 5G
: LTE
: Noise
C: concatenation
: upsampling
S: SCC
k, d
: DWConv k × k, dilation d, stride 2
Conv 1×1, 2
bn
Conv 3×3, 2
bn
relu
Conv 3×3, 1
bn
relu
ResBlock 1
Conv 3×3, 1
bn
relu
Conv 3×3, 1
bn
relu
ResBlock 2
Conv 1×1, 2
bn
RecConv 3×3, 2
bn
relu
RecConv 3×3, 1
bn
relu
RecBlock 1
RecConv 3×3, 1
bn
relu
RecConv 3×3, 1
bn
relu
RecBlock 2