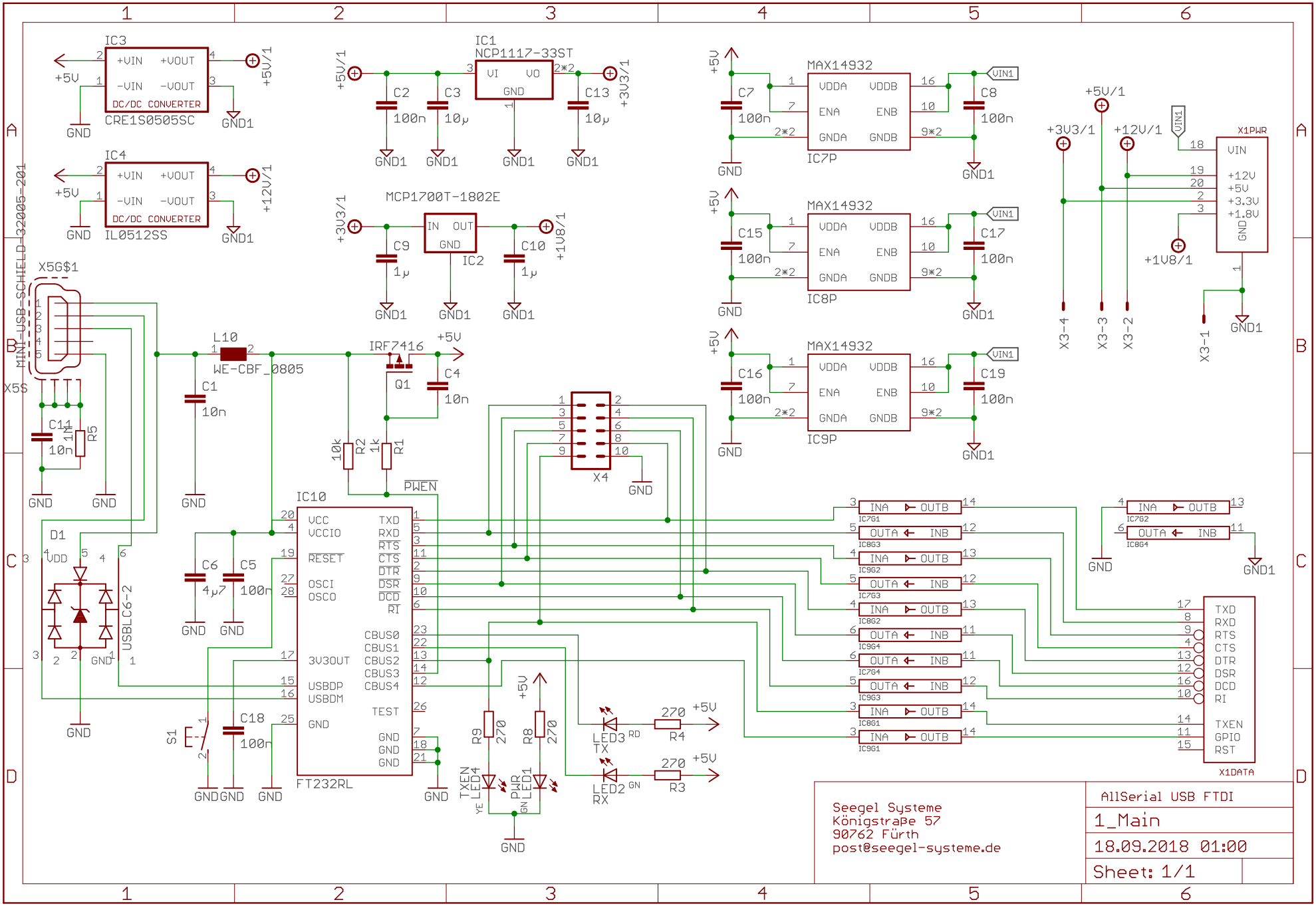
IC3
CRE1S0505SC
DC/DC CONVERTER
IC4
IL0512SS
IC1
NCP1117-33ST
MCP1700T-1802E
IC2
MAX14932
IC7P
IC8P
IC9P
X1PWR
X1DATA
X5G$1
MINI-USB-SCHIELD-32005-201
L10
WE-CBF_0805
IRF7416
Q1
IC10
FT232RL
USBLC6-2
X4
S1
LED3 TX
LED2 RX
LED4 TXEN
LED1 PWR
Seegel Systeme
Königstraße 57
90762 Fürth
post@seegel-systeme.de
AllSerial USB FTDI
1_Main
18.09.2018 01:00
Sheet: 1/1