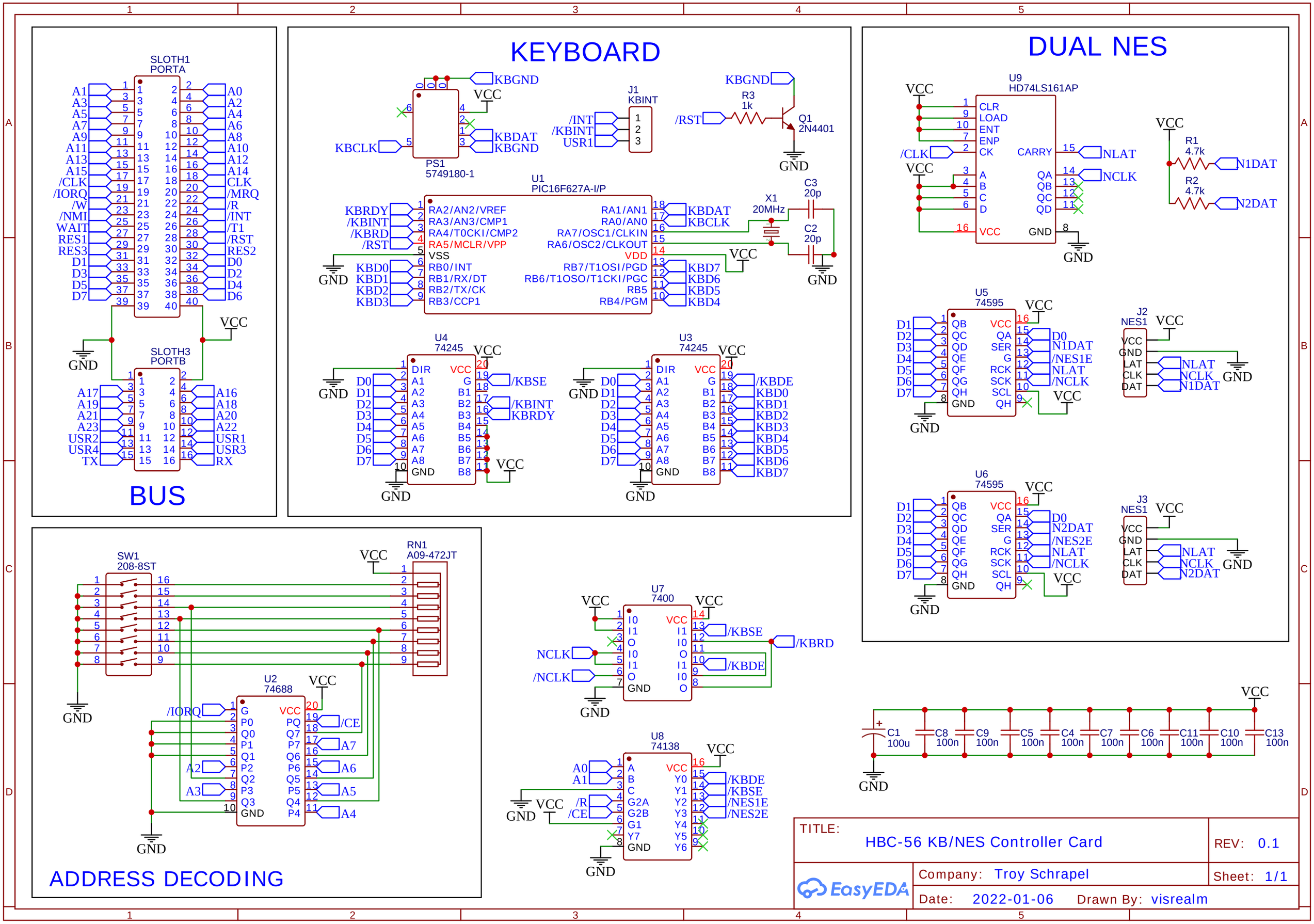
BUS
SLOTH1
PORTA
SLOTH3
PORTB
KEYBOARD
PS1
5749180-1
J1
KBINT
Q1
2N4401
U1
PIC16F627A-I/P
X1
20MHz
U4
74245
U3
74245
DUAL NES
U9
HD74LS161AP
U5
74595
U6
74595
J2
NES1
J3
NES1
ADDRESS DECODING
SW1
208-8ST
RN1
A09-472JT
U2
74688
U7
7400
U8
74138
TITLE:
HBC-56 KB/NES Controller Card
REV: 0.1
Company: Troy Schrapel
Sheet: 1/1
Date: 2022-01-06
Drawn By: visrealm
EasyEDA