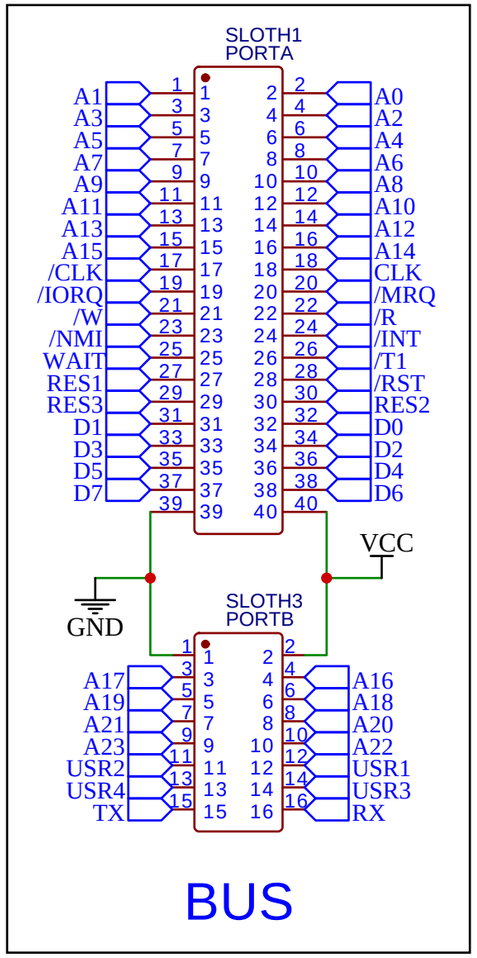

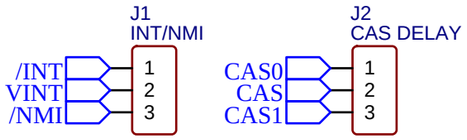

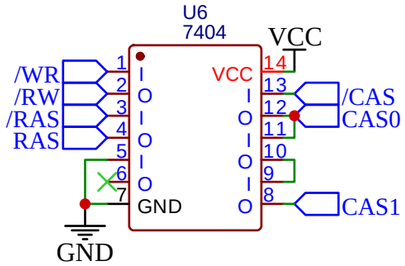

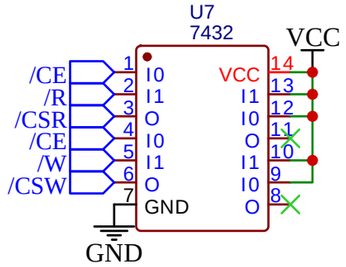

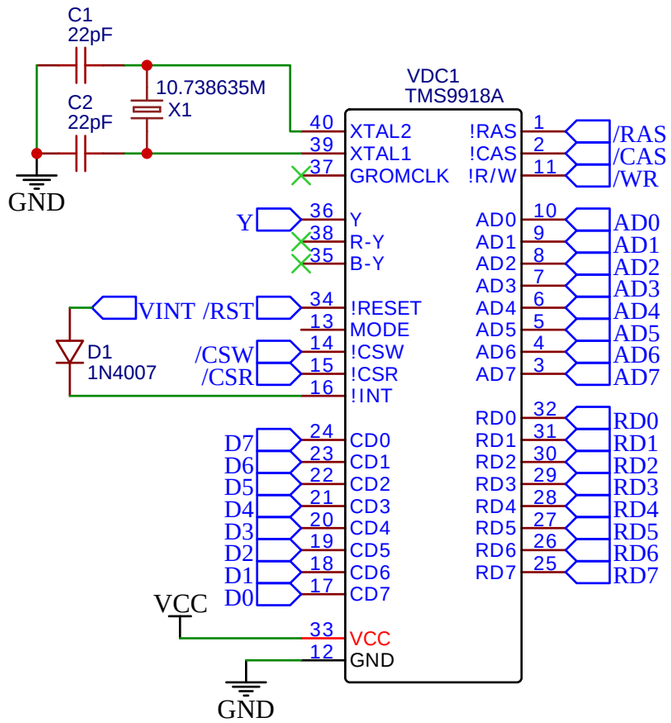

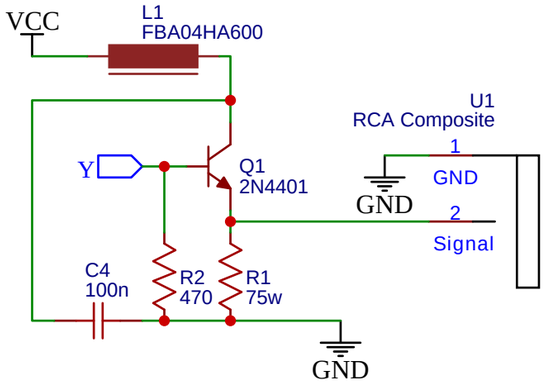

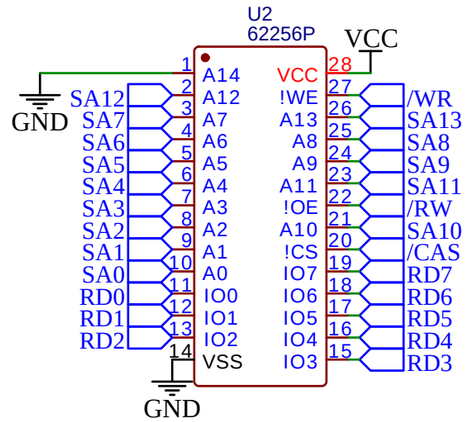

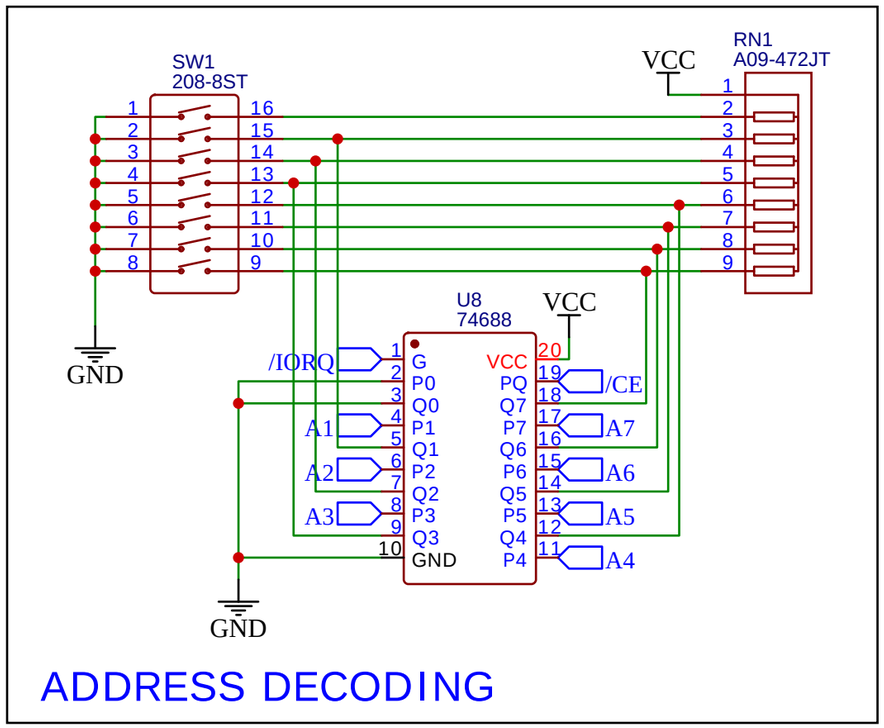

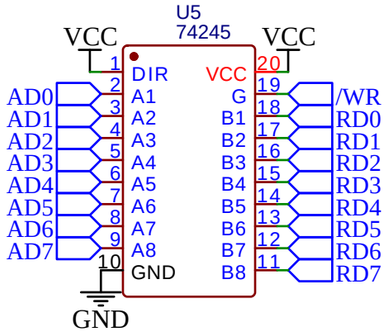

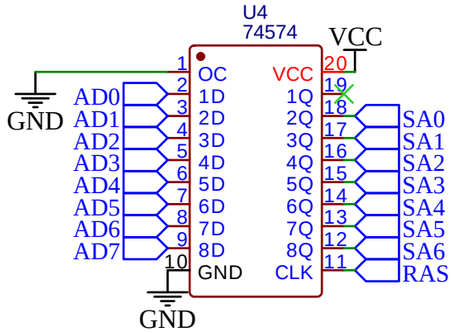

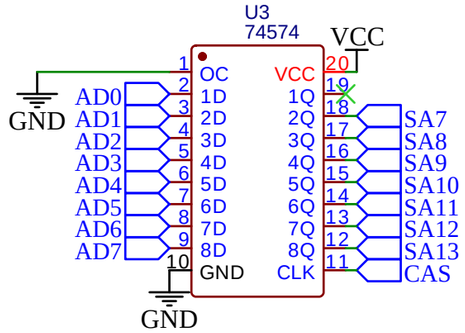

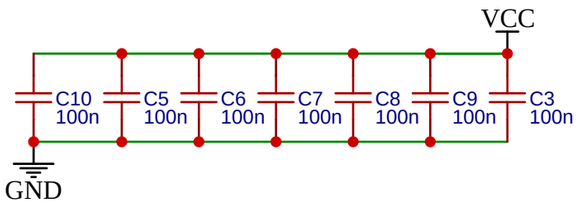

TITLE: HBC-56 TMS9918A VDP Card	REV: 0.1
Company: Troy Schrapel	Sheet: 1/1
Date: 2021-06-17 Drawn By: visrealm	

EasyEDA