Projeto No. 1

Luiz Scheuer, Enrique Scheuer,
Pedro Toledo, Maurício Dompieri

POLYMATHLAB

Vifa P17WJ00-08
ScanSpeak Discovery R2604/8330
Transmission Line Speakers

March 2024

Contents

1 Introduction **3**

2 Components **4**

3 Woofer **5**

4 Tweeter **6**

Chapter 1

Introduction

Project No. 1 is a floor standing speaker system developed for personal use by the Scheuer family in a space measuring approximately 4m x 3m ($12m^2$) with the aim of using components from renowned brands in the budget high-fidelity sound market and high-quality methodologies in the Do It Yourself (DIY) speaker building space.

A 2-way system was defined from the outset. At the beginning of the selection of drivers, models such as the ScanSpeak 22W/8534G00 Discovery 8" woofer were considered, but ultimately the choice of drivers was limited by their availability in Brazil and their cost.

Project No. 1 consists of the discontinued Vifa P17WJ00-08 6.5" model and the ScanSpeak Discovery R2604/8330 tweeter. Originally, the Vifa XT25BG60-04 tweeter had been chosen, but after being damaged during transportation by a commercial production company that rented the speakers, Project No. 1 received the ScanSpeak tweeter.

In terms of the cabinet/box, the Martin King's transmission line (TL) architecture with a 5:1 taper was chosen with a QB3 alignment and leakage QL = 7.

Chapter 2

Components

Table 2.1: Components

Component	Brand	Name/Type
Woofer	Vifa	P17JW00-08
Tweeter	ScanSpeak	Discovery R2604/8330
Active Crossover	miniDSP	miniDSP 2x4 HD
Binding Posts	HIFIDIY LIVE	
Banana Plugs	Nakamichi	
Speaker Wire	Tiaflex	Polarized 2 x 2,5mm^2
RCA Cable 1	Ley Line	Baikal
RCA Cable 2	Ley Line	Nazca

Chapter 3

Woofer

Vifa P17JW00-08

Nominal impedance [ohm]	8
Voice coil resistance [ohm]	5.8
Nominal power [W]	40
Short term max power [W]	350
Long term max power [W]	150
Operating power [W]	6.3
Sensitivity [dB]	88
Frequency range [Hz]	37-5000
Free air resonance [Hz]	37
Voice coil diameter [mm]	32
Voice coil height [mm]	14
Air gap height [mm]	6
Voice coil inductance [mH]	0.55
Eff. diaphragm Area [cm²]	136
Moving mass [g]	14
Magnet weight [g]/[oz]	415/14.6
Force factor [Bl]	6.5
VAS [l]	34.7
Qms	1.55
Qes	0.45
Qts	0.35

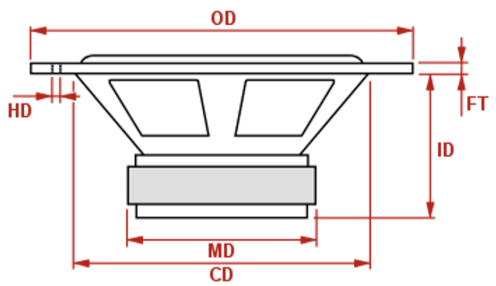

OD:	170 mm	CD:	146 mm
FT:	4.2 mm	ID:	71.3 mm
MD:	91.8 mm	HD:	4xø5@ø162

Figure 3.1: Tweeter Frequency Response

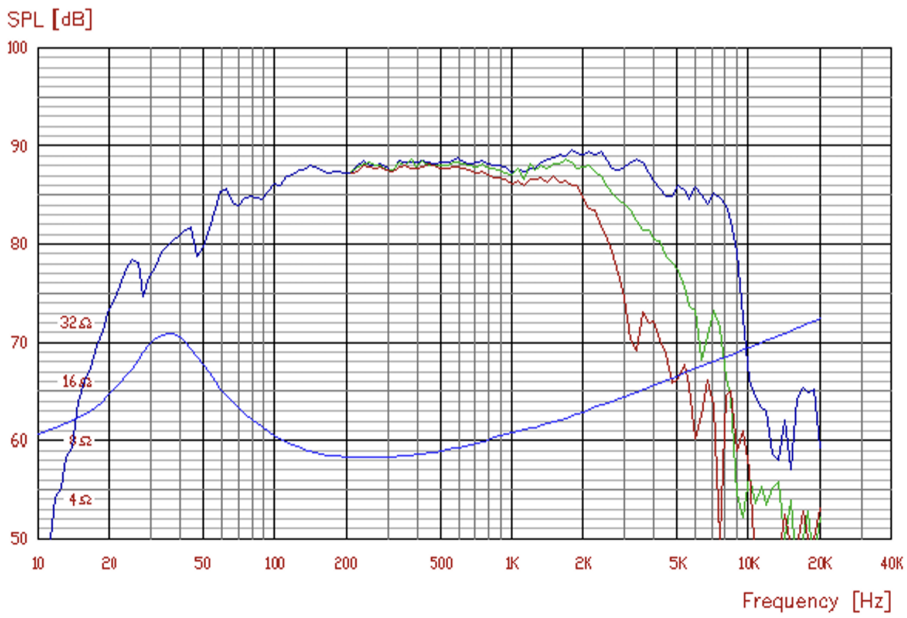

Frequency response: 2.83V / 1m

Figure 3.2: Tweeter Frequency Response

Chapter 4

Tweeter

ScanSpeak Discovery R2604/8330

T-S Parameters:	
Resonance frequency [fs]	440 Hz
Mechanical Q factor [Qms]	2.18
Electrical Q factor [Qes]	0.46
Total Q factor [Qts]	0.38
Force factor [Bl]	2.3 Tm
Mechanical resistance [Rms]	0.38 kg/s
Moving mass [Mms]	0.3 g
Compliance [Cms]	0.44 mm/N
Effective diaph. diameter [D]	26 mm
Effective piston area [Sd]	5.4 cm²
Equivalent volume [Vas]	0.02 l
Sensitivity (2,83V/1m)	92 dB

Mechanical Data:	
Voice coil diameter	26 mm
Voice coil height	2.2 mm
Voice coil layers	2
Gap height	2.5 mm
Linear excursion	± 0.2 mm
Max mech. excursion	± 1.6 mm
Unit weight	0.8 kg
Cabinet Displacement Volume	0.18 l

(a) Tweeter Specifications (1)

Electrical Data:	
Nominal impedance [Zn]	4 Ω
Minimum impedance [Zmin]	3.6 Ω
Maximum impedance [Zo]	16.8 Ω
DC resistance [Re]	2.9 Ω
Voice coil inductance [Le]	0.02 mH

Power Handling:	
100h RMS noise test (IEC 18.4)	100 W
Long-term max power (IEC 18.2)	- W
X-over: 2. order HP Butterworth, 2.5 kHz	

Key Features:
Extended Frequency To Above 40KHz
Very Low Resonance Frequency - 450Hz
Low Distortion
High sensitivity - 92dB
Dual Ring Radiator diaphragm (Patent)
Wave-guide center plug (Patent)

Recommendations (please see Tech Note):	
Operating frequency range:	2500-30000 Hz
Cabinet volume - closed box:	N.a.
Cabinet volume - vented box:	N.a.

(b) Tweeter Specifications (2)

Figure 4.1: Tweeter Specifications

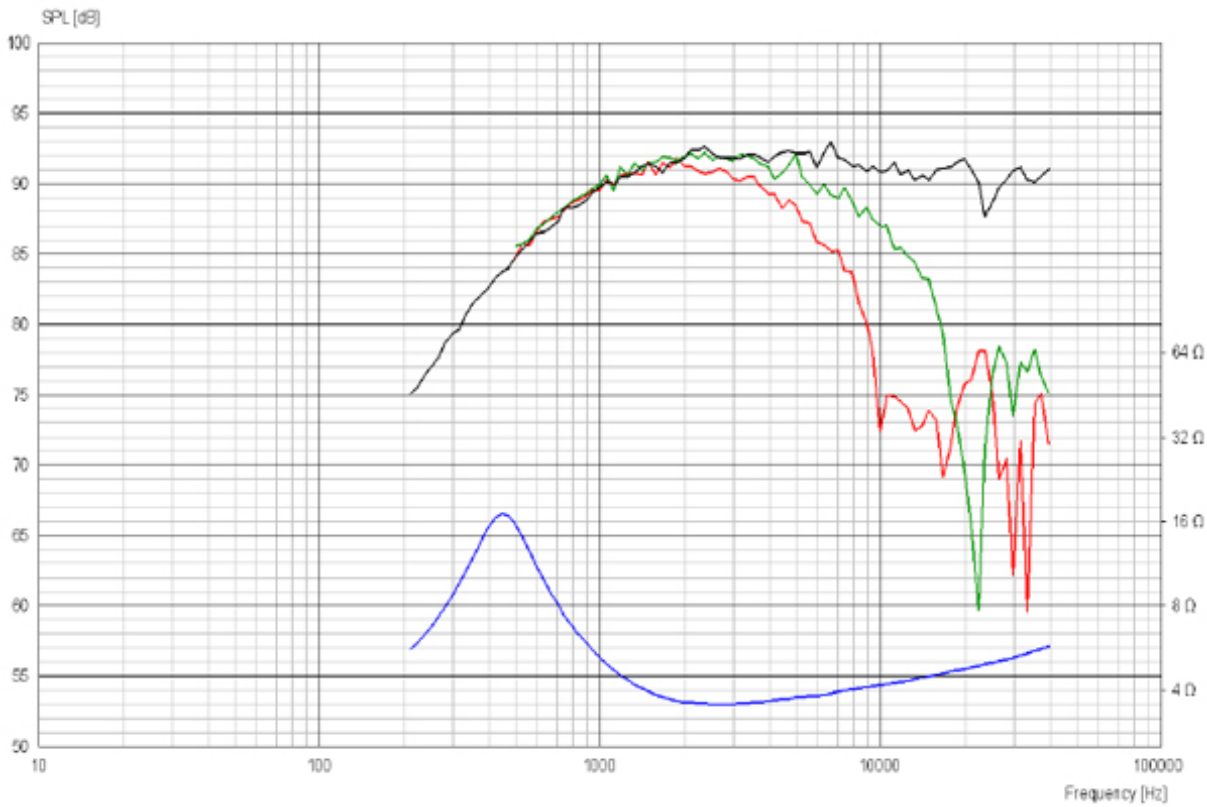

Figure 4.2: Tweeter Frequency Response

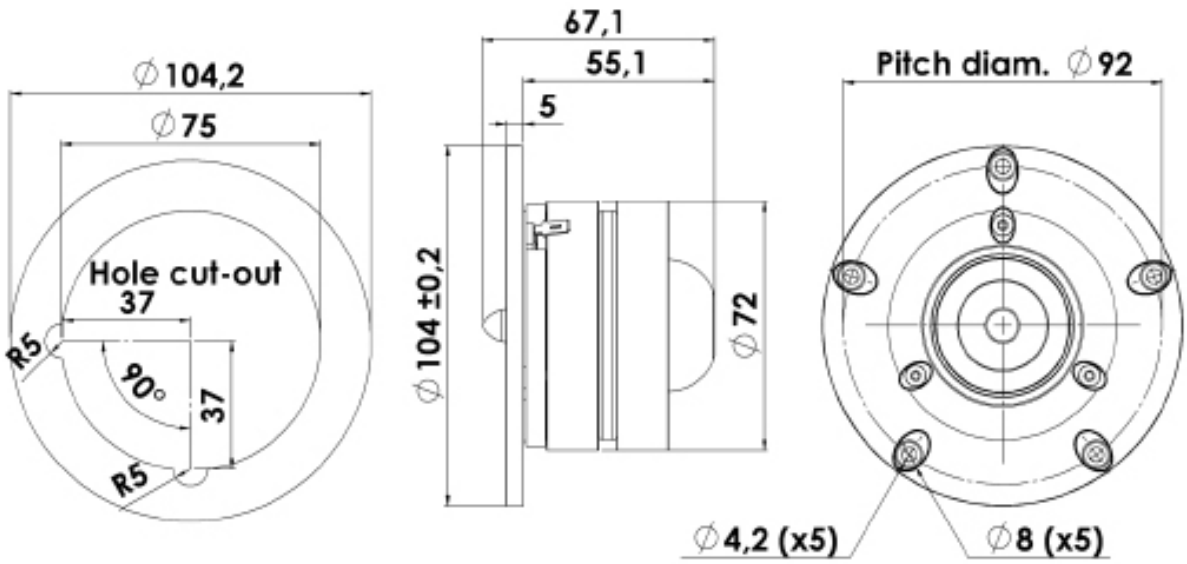

Figure 4.3: Tweeter Dimensions

Contact for full document.
polymathlab2024@gmail.com