Projeto No. 1

Luiz Scheuer, Enrique Scheuer,
Pedro Toledo, Maurício Dompieri

POLYMATHLAB

Vifa P17WJ00-08
ScanSpeak Discovery R2604/8330
Transmission Line

March 2024

Contents

1 Introduction **3**

2 Components **4**

3 Woofer **5**

4 Tweeter **6**

5 Initial Measurements and Burn-In **8**

6 Bass Reflex Alignment and Calculations **9**

7 Transmission Line **10**

8 Box Architecture **12**

9 Speaker Manufacturing **13**

Chapter 1

Introduction

Project No. 1 is a system developed for personal use by the Scheuer family in a space measuring approximately 4m x 3m ($12m^2$) with the aim of using components from renowned brands in the budget high-fidelity sound market and high-quality methodologies in the Do It Yourself (DIY) speaker building space.

A 2-way system was defined from the outset. At the beginning of the selection of drivers, models such as the ScanSpeak 22W/8534G00 Discovery 8" woofer were considered, but ultimately the choice of drivers was limited by their availability in Brazil and their cost.

Project No. 1 consists of the discontinued Vifa P17WJ00-08 6.5" model and the ScanSpeak Discovery R2604/8330 tweeter. Originally, the Vifa XT25BG60-04 tweeter had been chosen, but after being damaged during transportation by a commercial production company that rented the speakers, Project No. 1 received the ScanSpeak tweeter.

In terms of the cabinet/box, the Martin King's transmission line (TL) architecture with a 5:1 taper was chosen with a QB3 alignment and leakage QL = 7.

Chapter 2

Components

Table 2.1: Components

Component	Brand	Name/Type
Woofer	Vifa	P17JW00-08
Tweeter	ScanSpeak	Discovery R2604/8330
Active Crossover	miniDSP	miniDSP 2x4 HD
Binding Posts	HIFIDIY LIVE	
Banana Plugs	Nakamichi	
Speaker Wire	Tiaflex	Polarized 2 x 2,5mm^2
RCA Cable 1	Ley Line	Baikal
RCA Cable 2	Ley Line	Nazca

Chapter 3

Woofer

Nominal impedance [ohm]	8
Voice coil resistance [ohm]	5.8
Nominal power [W]	40
Short term max power [W]	350
Long term max power [W]	150
Operating power [W]	6.3
Sensitivity [dB]	88
Frequency range [Hz]	37-5000
Free air resonance [Hz]	37
Voice coil diameter [mm]	32
Voice coil height [mm]	14
Air gap height [mm]	6
Voice coil inductance [mH]	0.55
Eff. diaphragm Area [cm²]	136
Moving mass [g]	14
Magnet weight [g]/[oz]	415/14.6
Force factor [Bl]	6.5
VAS [l]	34.7
Qms	1.55
Qes	0.45
Qts	0.35

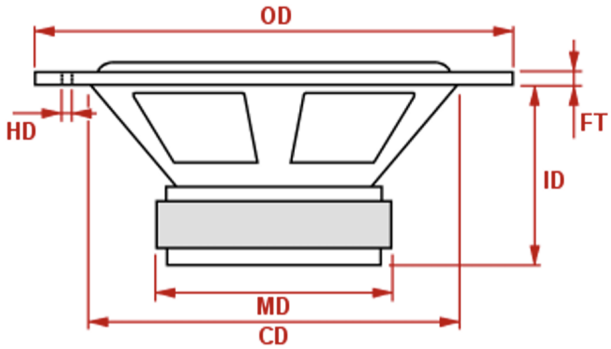

OD:	170 mm	CD:	146 mm
FT:	4.2 mm	ID:	71.3 mm
MD:	91.8 mm	HD:	4xø5@ø162

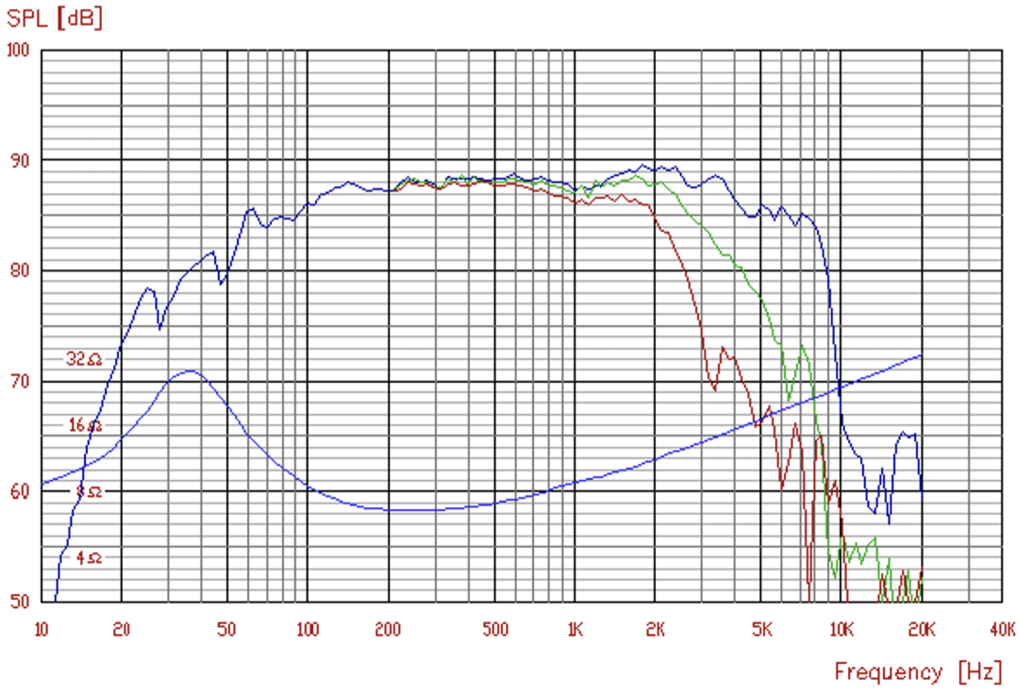

Frequency response: 2.83V / 1m

Chapter 4

Tweeter

ScanSpeak Discovery R2604/8330

T-S Parameters:	
Resonance frequency [fs]	440 Hz
Mechanical Q factor [Qms]	2.18
Electrical Q factor [Qes]	0.46
Total Q factor [Qts]	0.38
Force factor [Bl]	2.3 Tm
Mechanical resistance [Rms]	0.38 kg/s
Moving mass [Mms]	0.3 g
Compliance [Cms]	0.44 mm/N
Effective diaph. diameter [D]	26 mm
Effective piston area [Sd]	5.4 cm²
Equivalent volume [Vas]	0.02 l
Sensitivity (2,83V/1m)	92 dB

Mechanical Data:	
Voice coil diameter	26 mm
Voice coil height	2.2 mm
Voice coil layers	2
Gap height	2.5 mm
Linear excursion	± 0.2 mm
Max mech. excursion	± 1.6 mm
Unit weight	0.8 kg
Cabinet Displacement Volume	0.18 l

(a) Tweeter Specifications (1)

Electrical Data:	
Nominal impedance [Zn]	4 Ω
Minimum impedance [Zmin]	3.6 Ω
Maximum impedance [Zo]	16.8 Ω
DC resistance [Re]	2.9 Ω
Voice coil inductance [Le]	0.02 mH

Power Handling:	
100h RMS noise test (IEC 18.4)	100 W
Long-term max power (IEC 18.2)	- W
X-over: 2. order HP Butterworth, 2.5 kHz	

Key Features:
Extended Frequency To Above 40KHz
Very Low Resonance Frequency - 450Hz
Low Distortion
High sensitivity - 92dB
Dual Ring Radiator diaphragm (Patent)
Wave-guide center plug (Patent)

Recommendations (please see Tech Note):	
Operating frequency range:	2500-30000 Hz
Cabinet volume - closed box:	N.a.
Cabinet volume - vented box:	N.a.

(b) Tweeter Specifications (2)

Figure 4.1: Tweeter Specifications

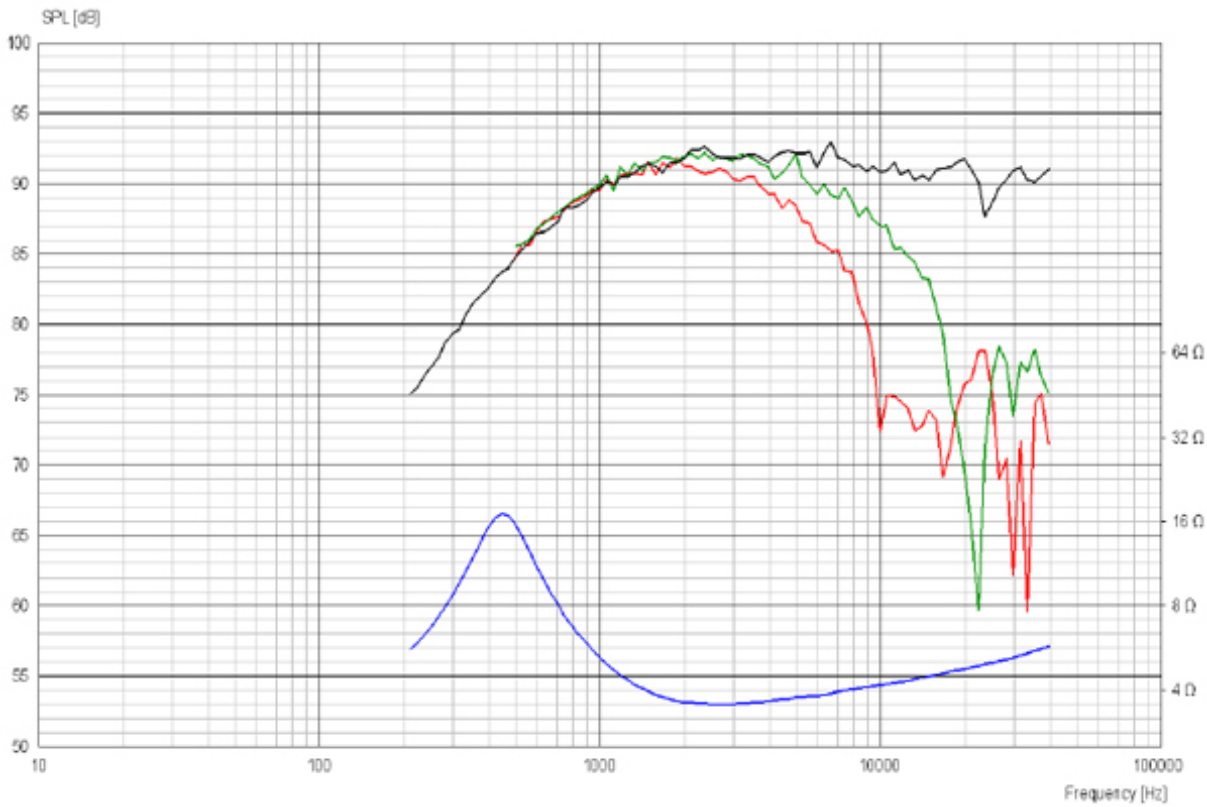

Figure 4.2: Tweeter Frequency Response

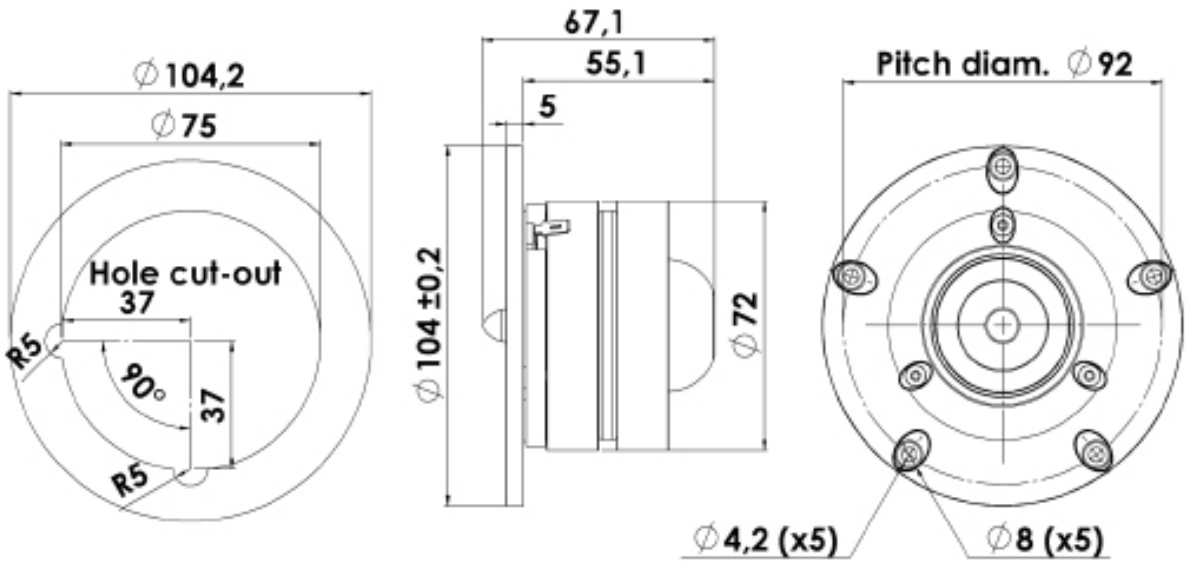

Figure 4.3: Tweeter Dimensions

Chapter 5

Initial Measurements and Burn-In

Table 5.1: Initial Measurements

	Pre-Burn-In (2024-3-30)		Post-Burn-In (2024-4-2)		Final		Evolução S/ Inicial)		Desvio S/ Nominal	
	Woofer_1	Woofer_2	Woofer_1	Woofer_2	Média	Desvio Par	Woofer_1	Woofer_2	Woofer_1	Woofer_2
Fs (Hz)	43.4	45.6	39.8	40.8	40.3	1.20%	−8.30%	−10.50%	7.60%	10.30%
Qes	0.51	0.56	0.45	0.48	0.47	3.20%	−12.10%	−14.00%	0.00%	6.70%
Qms	3.33	3.72	3.34	3.46	3.40	1.80%	0.40%	−7.00%	115,50%	123.20%
Qts	0.44	0.49	0.40	0.42	0.41	2.40%	−9.90%	−13.40%	14.30%	20.00%
Vas (L)	17.2	15.9	21.0	20.5	20.8	−1.20%	22.0%	28.90%	−39.50%	−40.90%

Initially, pre-burn-in and post-burn-in measurements of the Thiele/Small (T/S) parameters Fs, Vas, Qme, Qes and Qts were taken by Maurício from both woofers (Woofer_1 and Woofer_2), and were compared with the nominal catalog values. The measurements were made with the assistance of the Soundeasy software and a simple USB sound card. Table 5 shows the measurements.

Chapter 6

Bass Reflex Alignment and Calculations

The value of Qts from the final measurements is used to calculate the air volume V_b, the tuning frequency F_b, and F_3.

Qts is defined by

$$Q_{ts} = Q_{ms} + Qes. \tag{6.1}$$

Then, the 3rd order Quasi-Butterworth (QB3) with a leakage of QL = 7 from Vance Dickason's (REFERENCE) alignment tables was chosen for this project.

Table 6.1: Initial Measurements

QB3, QL = 7				
Q_{ts}	H	α	F_3/F_s	Peak-dB
0.41	0.9889	1.0065	0.9776	0

The air volume V_{as} is calculated by

$$V_b = \frac{V_{as}}{\alpha}. \tag{6.2}$$

The resonant frequency $\mathrm{F_b}$ is calculated by

$$F_b = H \cdot F_s. \tag{6.3}$$

The software AJ Vented Designer 2.0 (REFERENCE).

Qts, Qes, Fs, Vas, Pmax, driver diameter, Xmax, Dp and number of ports were used as inputs to calculate the port length.

Chapter 7

Transmission Line

Transmission line systems can take many forms, depending on the choice of drivers, cabinets, alignments, internal architecture, and other variables.

The geometry of the transmission line impacts the sound reproduced by the speaker. The variable cross-sectional area between the closed and open ends determines whether a line is tapered or flared. A taper ratio TR of 5:1 (0.2) and therefore a scale factor SF of 0.71 was chosen.

To determine the length of the transmission line L, the following formula, presented by Martin King [3], is used.

$$L = \frac{SF \times 344}{4 \times F_b}, \tag{7.1}$$

where SF is a scale factor that considers the line geometry and F_b is the tuning/resonant frequency of the cabinet.

To define the cross-sectional area of the tip where the speaker is installed, the following equation is used:

$$S_0 = V_b \cdot \frac{1}{\frac{1}{2} \cdot (1 + TR) \cdot L}. \tag{7.2}$$

S_0 is used to calculate the cross-sectional area of the open end of the transmission line S_L:

$$S_L = TR \cdot S_0. \tag{7.3}$$

Figure 3 (REFERENCE FIGURE) shows the different types of transmission line geometry:

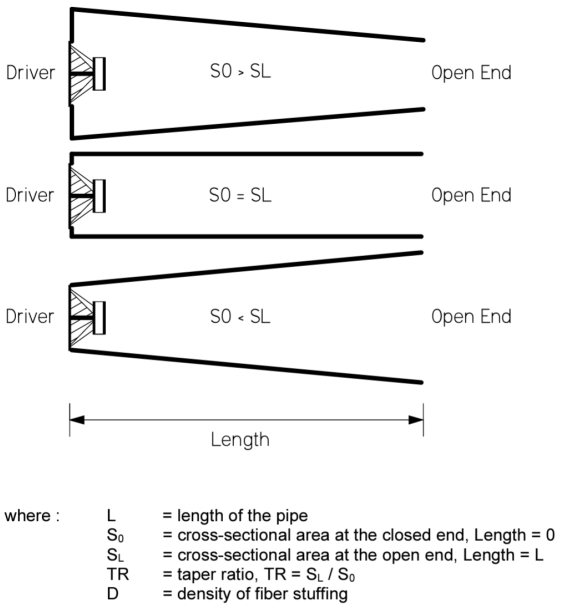

The transmission line volume V_{TL} can also be calculated based on the values of S_0, S_L and L:

$$V_{TL} = \frac{1}{2} \cdot (S_0) + S_L \cdot L. \tag{7.4}$$

Chapter 8

Box Architecture

After calculating the values of cross-sectional areas S_0 and S_L, the length of the transmission line L and the volume of the box V_{TL}, possible transmission line geometries that meet the mentioned values are designed.

First, it is known that the tweeter should be positioned 830 mm from the base of the box, since this is the level at ear height. From this variable, the rest of the components are measured and designed.

The width was chosen as 200 mm, the depth as 250 mm and the height as 897.1 mm. This leaves 15 mm of distance between the top of the tweeter and the top of the box, and 15 mm between the sides of the woofer and the baffle. There is a distance of 15 mm between the lower limit of the tweeter and the upper limit of the woofer.

Then, knowing that the defined dimensions result in an internal volume greater than the calculated V_{TL} of 20.67 L, internal shelves of 15 mm x 170 mm x 220 mm were introduced to reduce the volume. One shelf was located between the tweeter and the woofer, and a second just below the end of the transmission line ($S_L = 44.96$ cm^2).

The transmission line starts at a cross-sectional area $S_0 = 224.8$ cm^2 and ends at a cross-sectional area $S_L = 44.96$ cm^2, thus configuring a taper ratio of 5:1. The TL is 1,513 m long and passes through 2 horizontal bulkheads of different heights and lengths.

The upper horizontal bulkhead has a length of 132.24 mm so that SL is 224.8 cm^2, adding 15 mm to accommodate the width of the vertical bulkhead, totaling a length of 147.24 mm.

The vertical bulkhead has an inclination of 83.1° and a length of 311.42 mm, and the first bend of the LT occurs when the vertical bulkhead reaches 110 mm of distance between the sides and top of the box.

The upper horizontal bulkhead added to the vertical bulkhead has a volume of 1,116 L.

In terms of taper, the first reduction occurs with the introduction of a vertical bulkhead inclined at 83.1°. After it, horizontal bulkheads follow with different heights and spacings with the objective of reaching an SL output (full 5:1 taper) of 44.96 cm^2.

Rockwool stuffing was placed in the first 2/3 of the transmission line.

Chapter 9

Speaker Manufacturing

The speaker boxes are made of 15 mm medium-density fiberboard (MDF) and are finished with Freijó laminate.

The cut MDF pieces for both speaker towers have the following measurements:

- 8x 170 mm x 220 mm (top and bottom, upper and lower bulkheads);
- 4x 200 mm x 898 mm (baffle and backside);
- 4x 220 mm x 898 mm (sides);
- 2x 170 mm x 194 mm (horizontal bulkhead);
- 2x 170 mm x 171 mm (horizontal bulkhead);
- 2x 148 mm x 170 mm (horizontal bulkhead);
- 2x 312 mm x 170 mm (vertical bulkhead).

All pieces were then cut to their precise measurements, specified in the previous chapter.