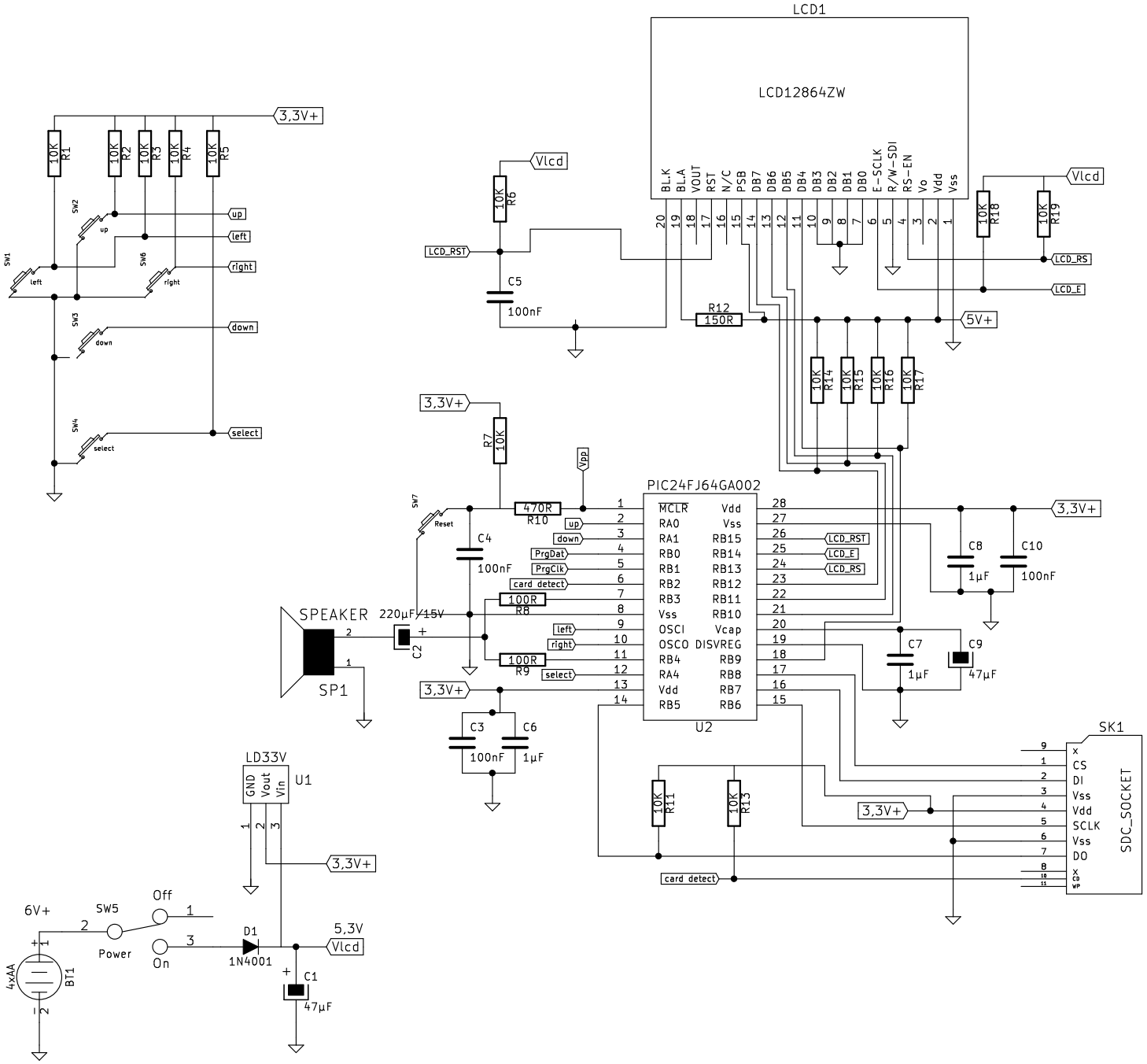
LCD1
LCD12864ZW
BLK
BLA
VOUT
RST
N/C
PSB
DB7
DB6
DB5
DB4
DB3
DB2
DB1
DB0
E-SCLK
R/W-SDI
RS-EN
Vo
Vdd
Vss
Vlcd
10K R6
LCD_RST
C5
100nF
R12
150R
5V+
10K R18
10K R19
LCD_RS
LCD_E
10K R14
10K R15
10K R16
10K R17
3,3V+
R7
10K
Vpp
PIC24FJ64GA002
MCLR
RA0
RA1
RB0
RB1
RB2
RB3
Vss
OSCI
OSCO
RB4
RA4
Vdd
RB5
Vdd
Vss
RB15
RB14
RB13
RB12
RB11
RB10
Vcap
DISVREG
RB9
RB8
RB7
RB6
U2
SW7
Reset
470R
R10
up
down
PrgDat
PrgClk
card detect
100R
R8
left
right
100R
R9
select
C4
100nF
SPEAKER
SP1
220µF/15V
C2
C3
100nF
C6
1µF
C8
1µF
C10
100nF
C7
1µF
C9
47µF
SK1
SDC_SOCKET
x
CS
DI
Vss
Vdd
SCLK
Vss
DO
x
CD
WP
10K R11
10K R13
card detect
LD33V
GND
Vout
Vin
U1
3,3V+
10K R1
10K R2
10K R3
10K R4
10K R5
SW1
SW2
SW3
SW4
SW6
up
left
right
down
select
6V+
SW5
Off
Power
On
4xAA
BT1
D1
1N4001
5,3V
Vlcd
C1
47µF