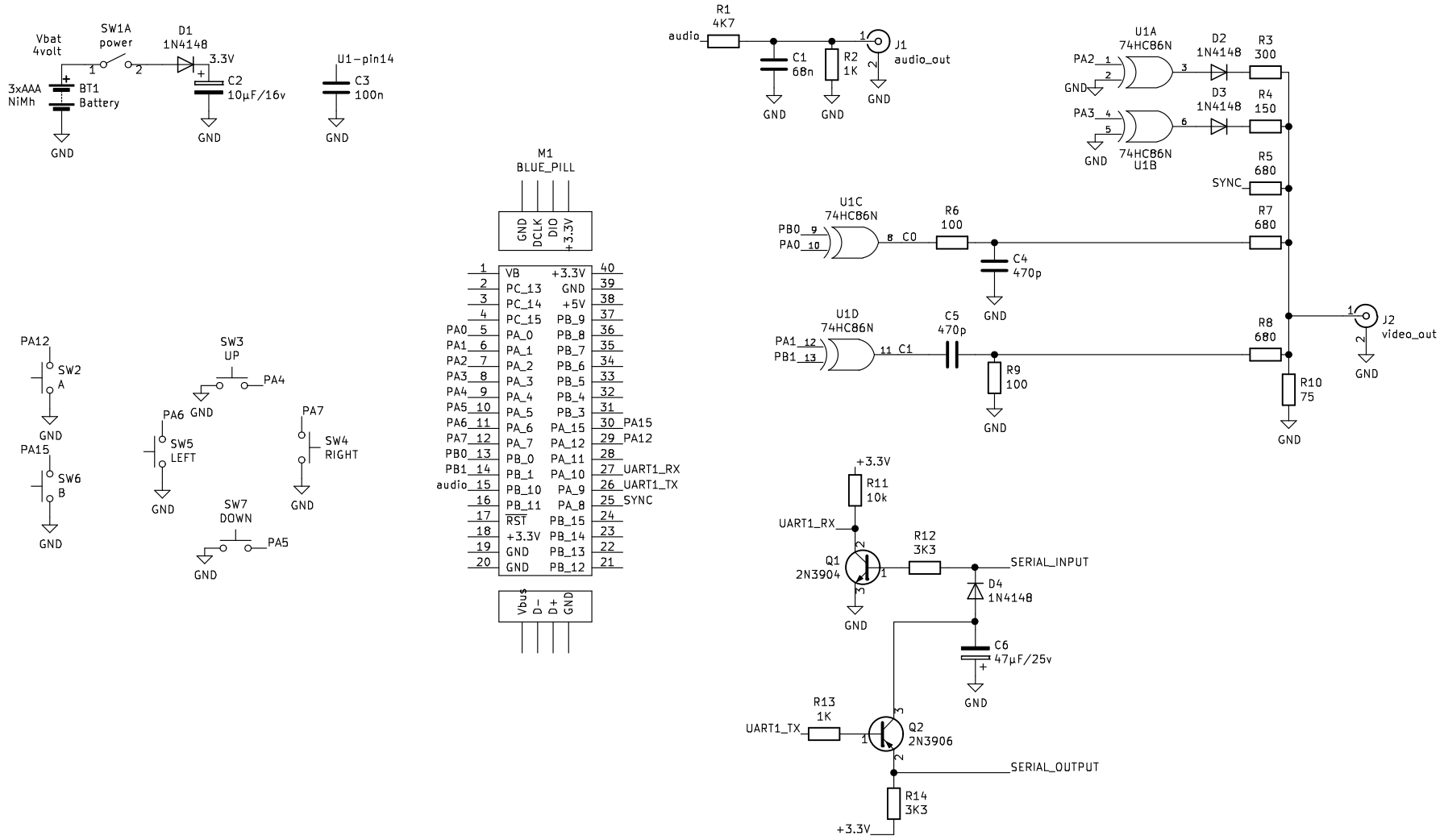

Copyright Jacques Deschênes, 2019
licence: CC-BY-SA 4.0
REF: https://creativecommons.org/licenses/by-sa/4.0/

Sheet: /
File: bp-chipcon.sch

Title:

Size: A4	Date: 2019-05-19	Rev:
KiCad E.D.A. kicad 5.0.2-bee76a070ubuntu16.04.1		Id: 1/1

This work is licensed under the Creative Commons Attribution-ShareAlike 4.0 International License.
To view a copy of this license, visit
http://creativecommons.org/licenses/by-sa/4.0/
or send a letter to Creative Commons, PO Box 1866, Mountain View, CA 94042, USA.