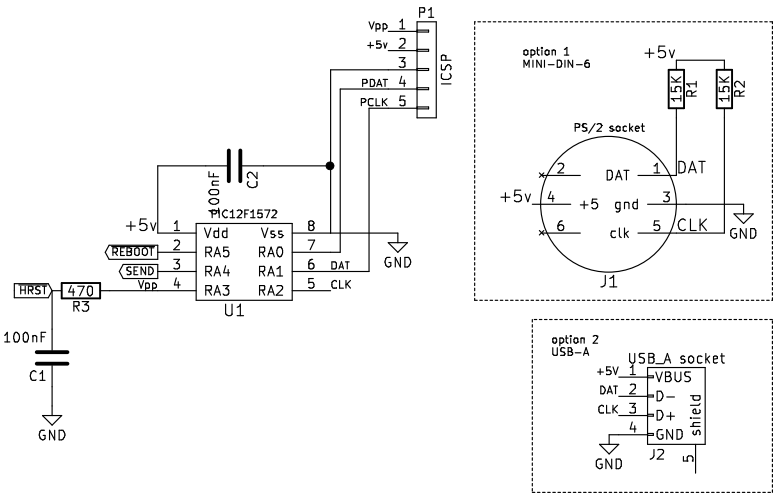

licence: CC-BY-SA

Sheet: /
File: ps2_rs232.sch

Title:

Size: A4	Date:	**Rev:**
KiCad E.D.A. kicad 4.0.4+e1-630848ubuntu16.04.1-stable		Id: 1/1