Rev: 1.0	Rev note: upissued to v1.0	Date: 26/05/2015
Rev: 0.5	Rev note: moved connections to low end of J1	Date: 24/05/2015
Rev: 0.4	Rev note: adjusted to use all resistor arrays	Date: 12/05/2015

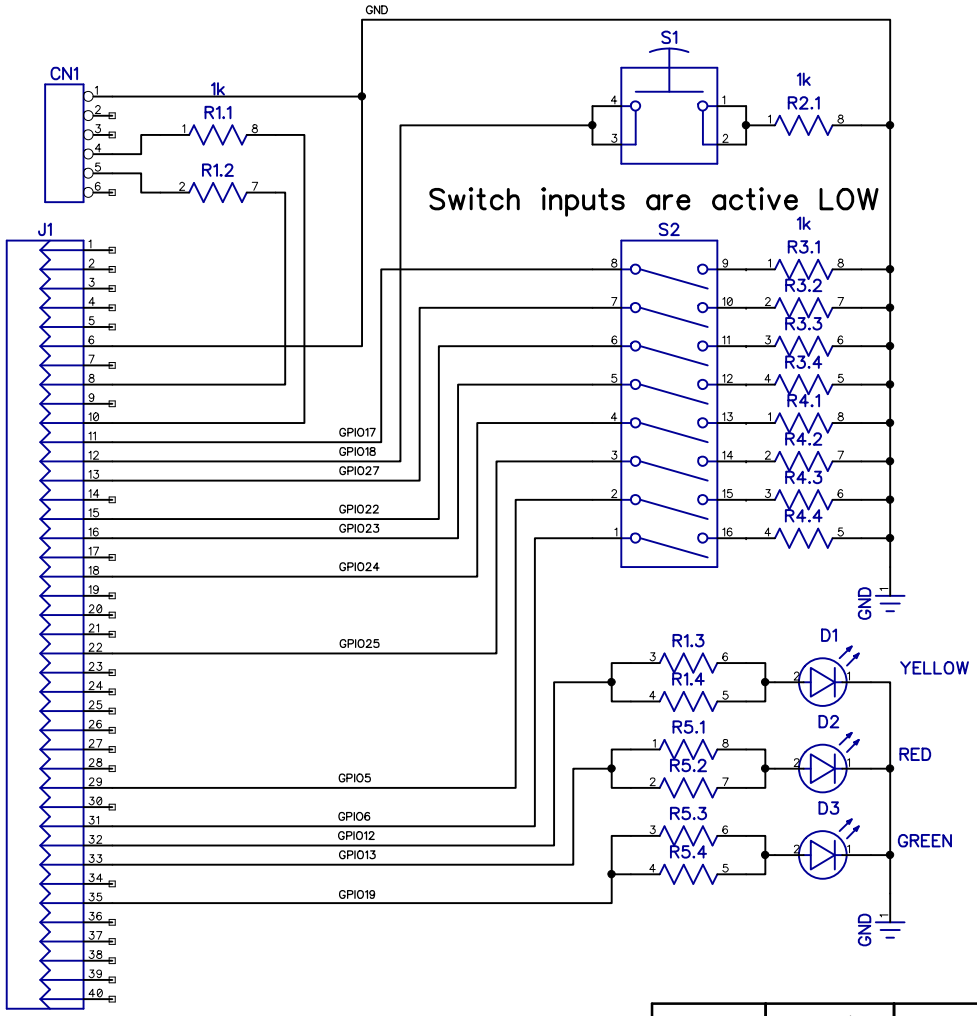

Switch inputs are active LOW

LEDs are active HIGH

Itemref	Quantity	Raspberry Pi A+/B+ Utility Board		Article No./Reference	
Designed by SD	Checked by	Approved by - date - 00/00/00	File name	Date 00/00/00	Scale 1:1
				Edition 0	Sheet 1/1