| | | |
|---|---|---|
| Rev: 1.0 | Rev note: upissued to v1.0 | Date: 26/05/2015 |
| Rev: 0.5 | Rev note: moved connections to low end of J1 | Date: 24/05/2015 |
| Rev: 0.4 | Rev note: adjusted to use all resistor arrays | Date: 12/05/2015 |

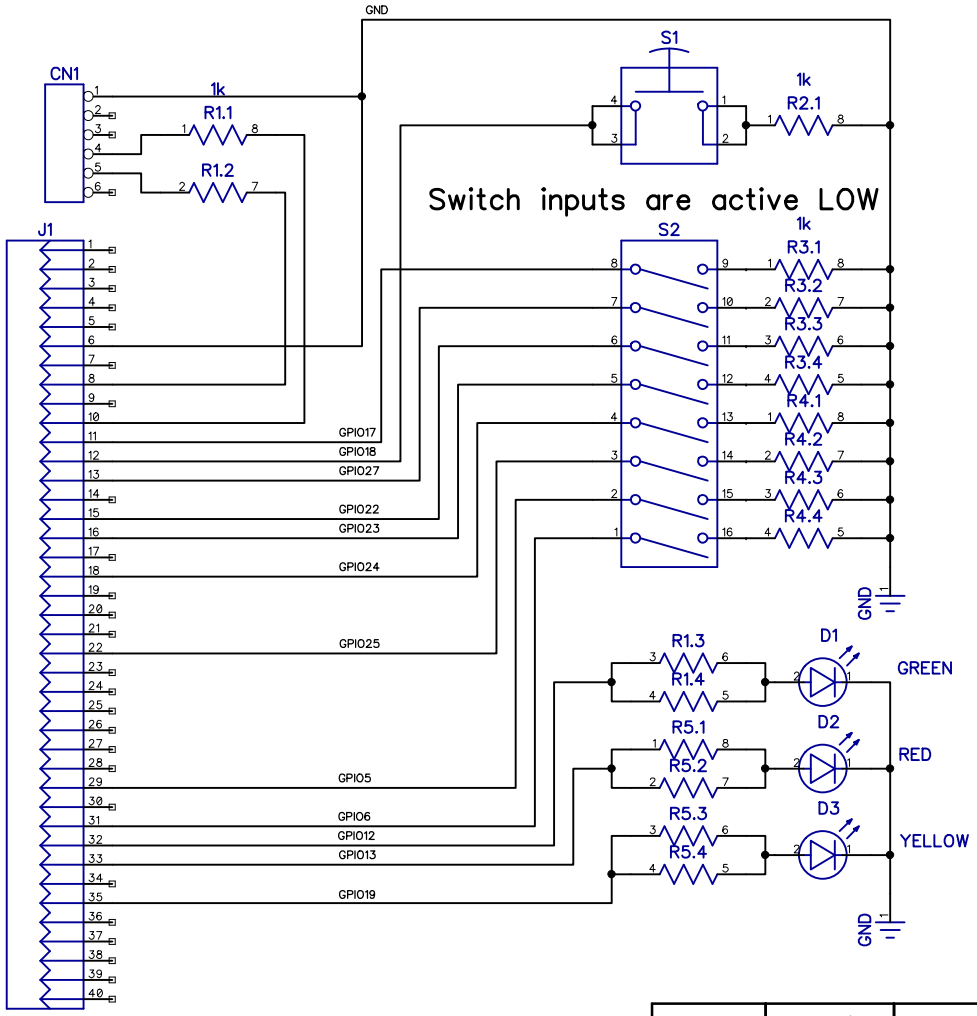


| Itemref | Quantity | Raspberry Pi A+/B+ Utility Board | | Article No./Reference | |
|---|---|---|---|---|---|
| Designed by SD | Checked by | Approved by - date - 00/00/00 | File name | Date 00/00/00 | Scale 1:1 |
| | | | | Edition 0 | Sheet 1/1 |