AGF-RC ELECTRONIC TECHNOLOGY CO.,LTD

PRODUCT SPECIFICATION

SA75CVSW V2

Control System	Pulse width modulation control
Refresh Rate	333Hz
Neutral Position	1520uS
Signal Mode	Digital
Dead Band	2 uSec
Operating Voltage	10V ~ 13V
Operating Temperature	-15C°~ +70C°
Bearing	Double Ball Bearings
Mechanical Angle	No Limit
Size	40*20*41.5mm
Net Weight	82g
Wire	TYU + JST 300mm / 22AWG
Operating Travel	180°±10°
Signal Range	500 to 2500 uSec

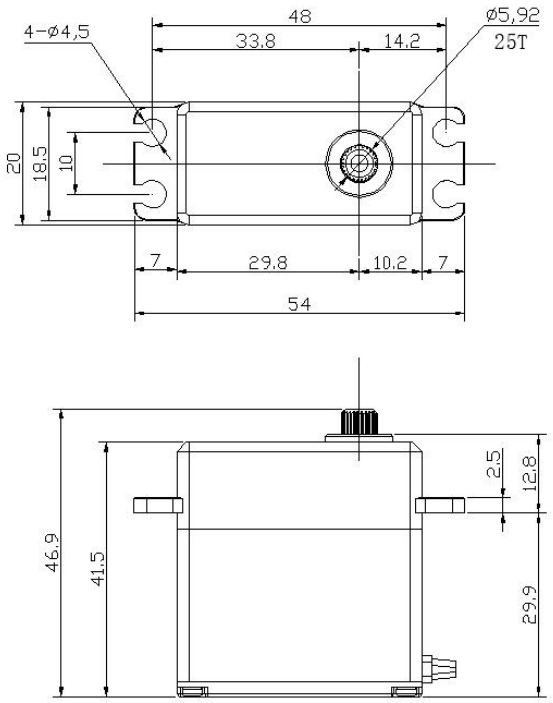

Stall Torque	39.0 kg-cm (542 oz-in) @ 11.1V 42.0 kg-cm (583 oz-in) @ 12.0V 45.0 kg-cm (625 oz-in) @ 12.6V	**Unload Current**	480mA @ 11.1V 550mA @ 12.0V 580mA @ 12.6V
Operating Speed	0.105sec/60° @ 11.1V 0.093sec/60° @ 12.0V 0.090sec/60° @ 12.6V	**Loading Current**	4000mA @ 11.1V 4500mA @ 12.0V 4800mA @ 12.6V

Direction	☑ CCW	☐ CW		
Waterproof Level	☐ IP65	☑ IP67		
Servo Mode	☑ Regular Servo	☑ Servo Winch	☐ Multiple-Rotation Servo	
Angle Sensor	☐ Potentiometer	☑ Magnet Angle Sensor		
Motor Type	☐ Brushless	☑ Coreless	☐ DC	
Motor Drive	☑FET Drive	☐ IC Drive	☐ Transistor Drive	
Programmable	☑ Yes	☐ No		
Gear Material	☑ Strength Steel	☑ Titanium	☐ Copper	☐ Plastic
Horn Gear Spline	☑ 25T-φ5.92mm	☐ 25T-φ4.94mm	☐ Other_____	
Case Material	☑ AL6061T6	☐ AL+Plastic	☐ Plastic	
Bearing Material	☑ Metal	☐ Plastic		
Horn Accessories	☐ AL6061T6	☑ Plastic		
Wire Color	Battery Negative:	☑ Black	☐ Brown	
	Battery Positive:	☐ Black	☑ Red	
	Signal:	☑ Grey	☐ White	☐ Orange
	Signal Negative:	☑ Black	☐ White	☐ Orange

PRODUCT SPECIFICATION