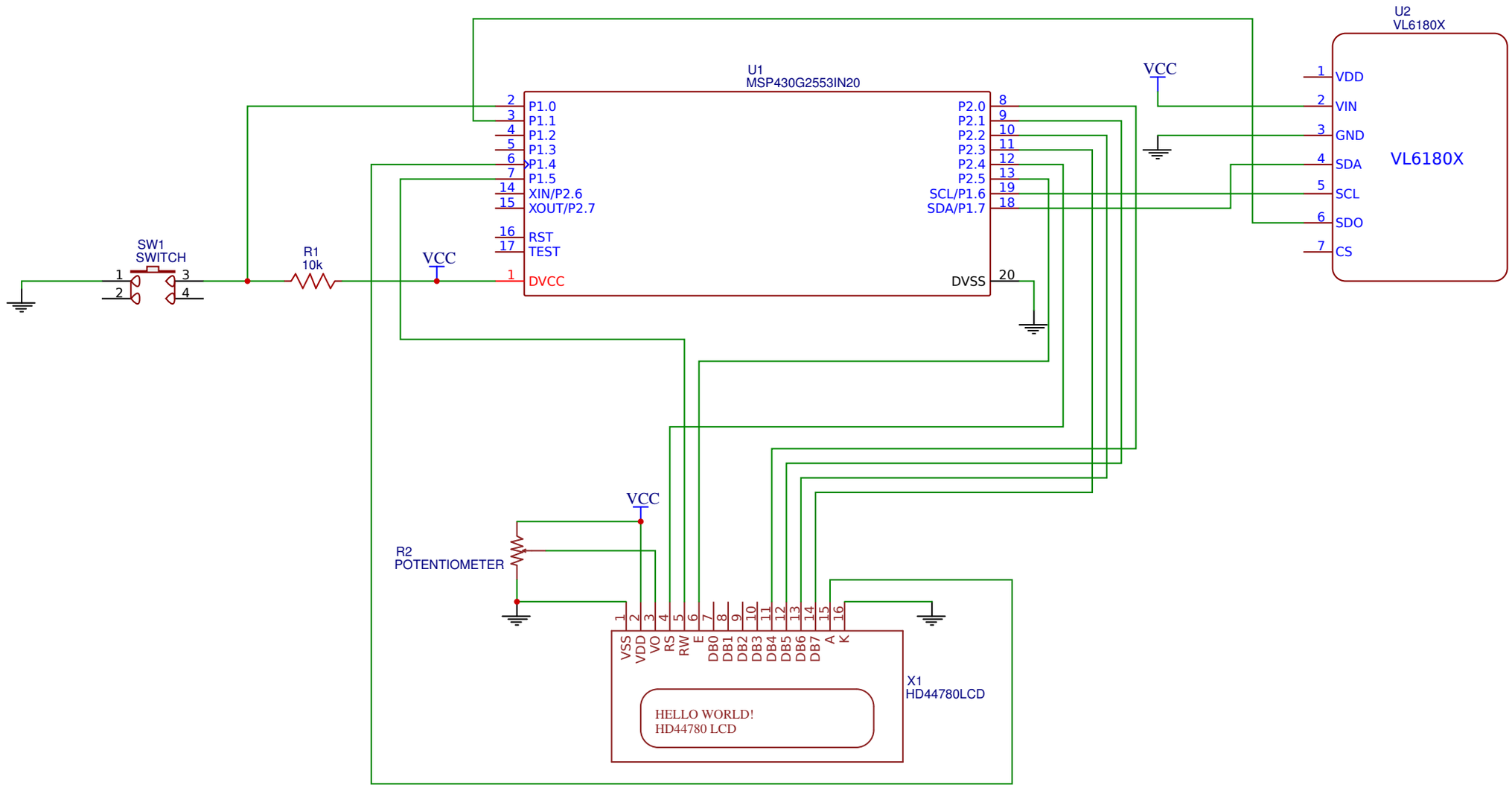

TITLE: New Schematic	REV: 1.0
Date: 2018-01-12	Sheet: 1/1
EasyEDA V4.11.9	Drawn By: Your Name