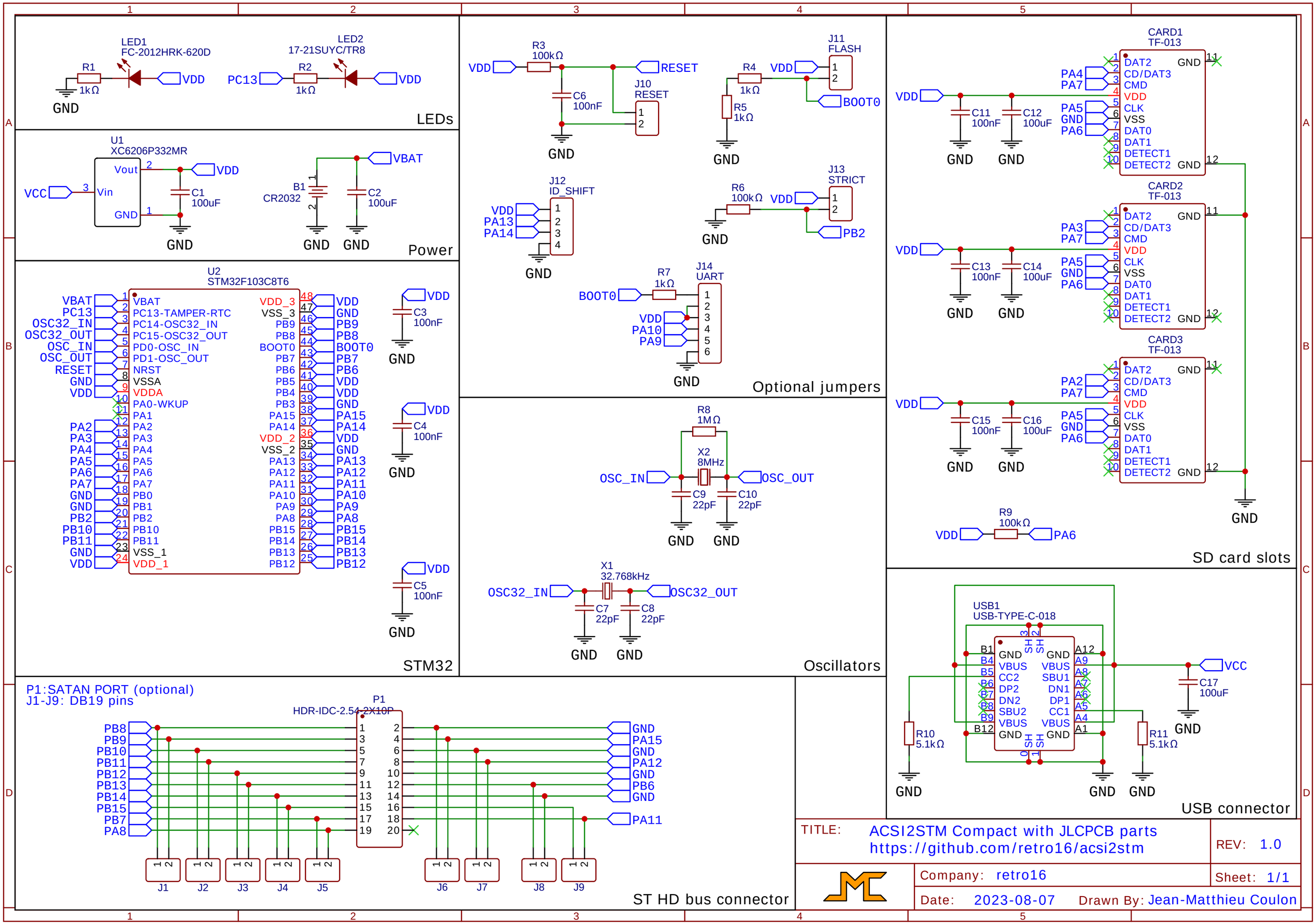
LED1
FC-2012HRK-620D
R1
1kΩ
VDD
GND
LED2
17-21SUYC/TR8
PC13
R2
1kΩ
VDD
LEDs
U1
XC6206P332MR
VCC
Vin
Vout
GND
VDD
C1
100uF
VBAT
B1
CR2032
C2
100uF
GND
Power
U2
STM32F103C8T6
VBAT
PC13
OSC32_IN
OSC32_OUT
OSC_IN
OSC_OUT
RESET
GND
VDD
PA2
PA3
PA4
PA5
PA6
PA7
PB2
PB10
PB11
PC13-TAMPER-RTC
PC14-OSC32_IN
PC15-OSC32_OUT
PD0-OSC_IN
PD1-OSC_OUT
NRST
VSSA
VDDA
PA0-WKUP
PA1
PA2
PA3
PA4
PA5
PA6
PA7
PB0
PB1
PB2
PB10
PB11
VSS_1
VDD_1
VDD_3
VSS_3
PB9
PB8
BOOT0
PB7
PB6
PB5
PB4
PB3
PA15
PA14
VDD_2
VSS_2
PA13
PA12
PA11
PA10
PA9
PA8
PB15
PB14
PB13
PB12
C3
100nF
C4
100nF
C5
100nF
STM32
R3
100kΩ
C6
100nF
J10
RESET
J11
FLASH
R4
1kΩ
R5
1kΩ
BOOT0
J12
ID_SHIFT
PA13
PA14
J13
STRICT
R6
100kΩ
PB2
J14
UART
R7
1kΩ
PA10
PA9
Optional jumpers
R8
1MΩ
X2
8MHz
C9
22pF
C10
22pF
X1
32.768kHz
C7
22pF
C8
22pF
OSC32_IN
OSC32_OUT
Oscillators
CARD1
TF-013
CARD2
TF-013
CARD3
TF-013
DAT2
CD/DAT3
CMD
CLK
VSS
DAT0
DAT1
DETECT1
DETECT2
C11
100nF
C12
100uF
C13
100nF
C14
100uF
C15
100nF
C16
100uF
R9
100kΩ
PA6
SD card slots
USB1
USB-TYPE-C-018
VBUS
CC2
DP2
DN2
SBU2
SBU1
DN1
DP1
CC1
R10
5.1kΩ
R11
5.1kΩ
C17
100uF
USB connector
P1:SATAN PORT (optional)
J1-J9: DB19 pins
P1
HDR-IDC-2.54-2X10P
PB8
PB9
PB10
PB11
PB12
PB13
PB14
PB15
PB7
PA8
GND
PA15
PA12
PB6
PA11
J1
J2
J3
J4
J5
J6
J7
J8
J9
ST HD bus connector
TITLE:
ACSI2STM Compact with JLCPCB parts
https://github.com/retro16/acsi2stm
REV: 1.0
Company: retro16
Sheet: 1/1
Date: 2023-08-07
Drawn By: Jean-Matthieu Coulon