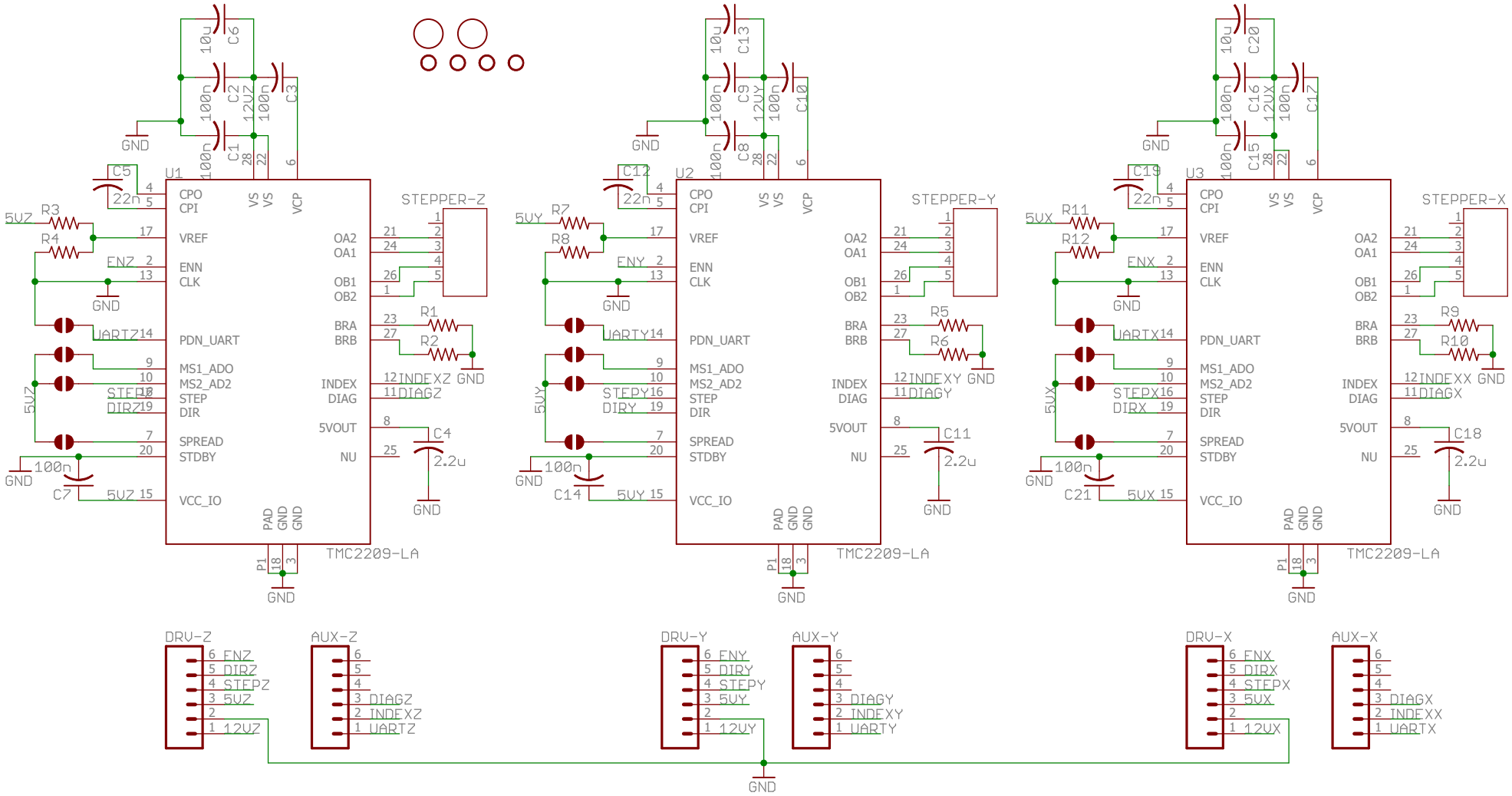
U1
U2
U3
TMC2209-LA
CPO
CPI
VS
VS
VCP
VREF
ENN
CLK
PDN_UART
MS1_ADO
MS2_AD2
STEP
DIR
SPREAD
STDBY
VCC_IO
OA2
OA1
OB1
OB2
BRA
BRB
INDEX
DIAG
5VOUT
NU
PAD
GND
GND
P1
STEPPER-Z
STEPPER-Y
STEPPER-X
DRV-Z
AUX-Z
DRV-Y
AUX-Y
DRV-X
AUX-X
6 ENZ
5 DIRZ
4 STEPZ
3 5VZ
1 12VZ
3 DIAGZ
2 INDEXZ
1 UARTZ
6 ENY
5 DIRY
4 STEPY
3 5VY
1 12VY
3 DIAGY
2 INDEXY
1 UARTY
6 ENX
5 DIRX
4 STEPX
3 5VX
1 12VX
3 DIAGX
2 INDEXX
1 UARTX
GND