Lab: Circuitos Electricos

$V_{load} = \frac{7.071 \cdot (800)}{1800} = 3.14V$

$p_{load\ exp} \frac{(3.15)^2}{500} = 12.3mW$

$V_{load} \frac{7.071 / (1700)}{2,200} = 3.86V$

$p_{load} = \frac{3.87}{1,200} = 12.48mW$

$V_{load} = \frac{7.071 (800)}{2800} = 4.54V$

$p_{load} = \frac{4.54}{1800} = 1.55mW$

$V_{load} = \frac{7.071 (3000)}{4000} = 5.3V$

$p_{load} = \frac{5.32}{3000}^2 = 9.47mW$

Credeel

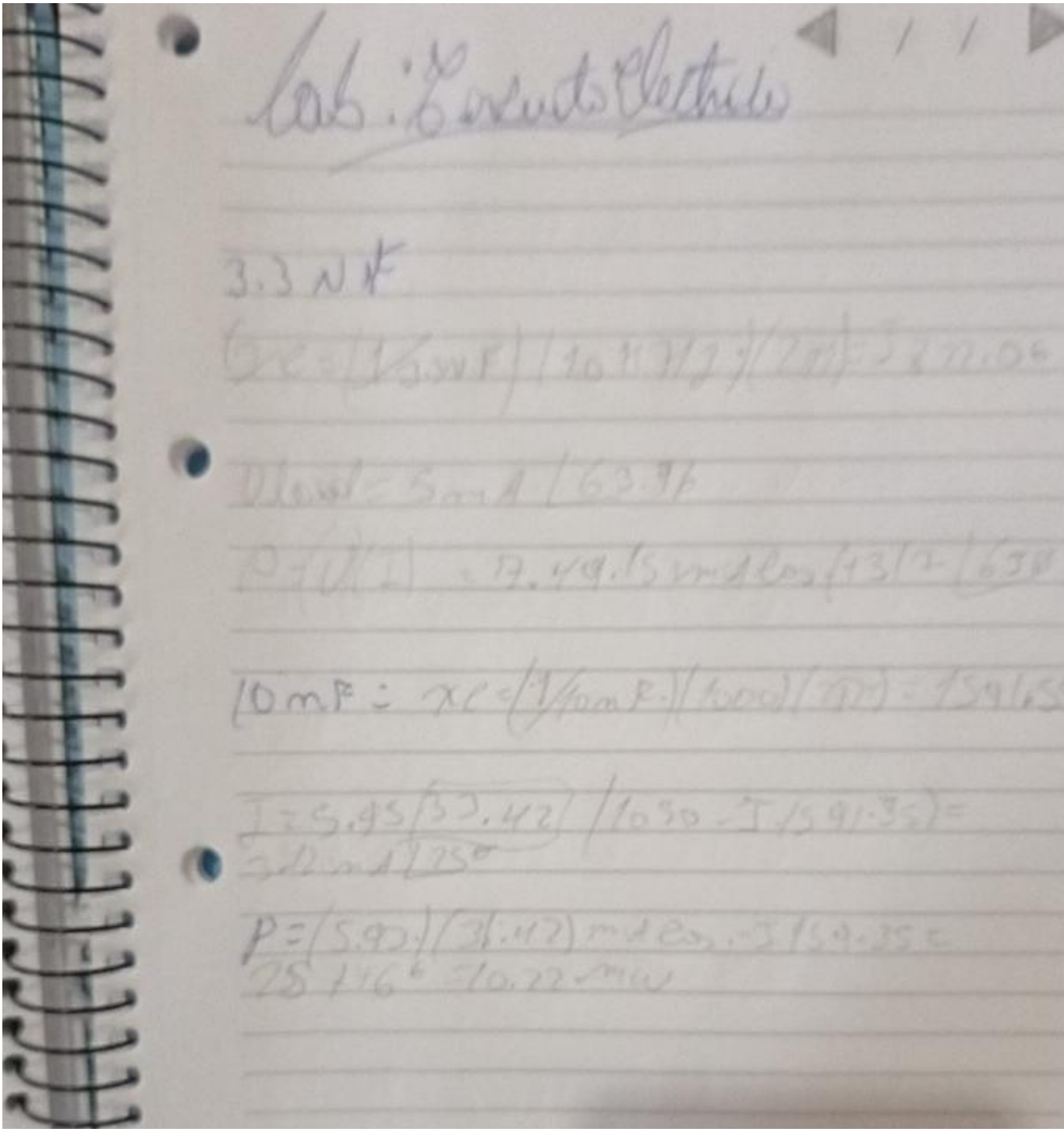

Lab: Circuito Electrico

3.3 nF

$Q_C = (1/3.3nF)(10117/2)(2\pi) = 3822.06$

$V_{load} = 5mA \angle 63.96$

$P = (V)(I) = 7.49.15 mA \cos(13)2 \angle 63.96$

10 nF: $X_C = (1/10nF)(1000)(2\pi) = 1591.55$

$I = 5.95 \angle 33.42 / 1030 - J(591.35) =$
$3.2 mA \angle 25°$

$P = (5.95)(33.42) mA \cos - J(59.35) =$
$25 + 16° = 10.22 mW$

lab: Circuits

V. load theory

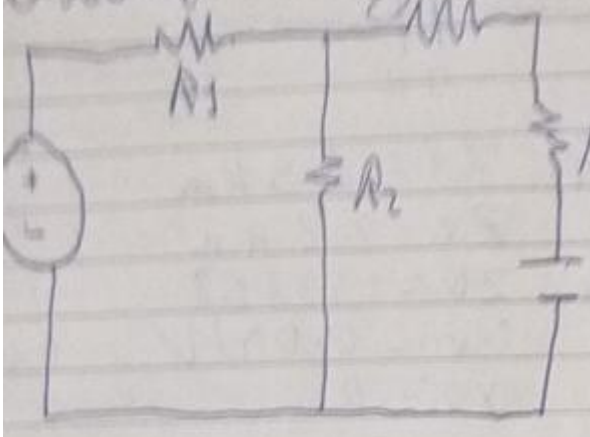

$V_{IN} = 1\,\Omega$
$R_2 = 10\,k\Omega$
$R_1 = 1.5\,k\Omega$
$R_2 = 2.2\,k\Omega$
$L = 10\,mH$
$R_1 = 1\,k\Omega$
$C = 0.1\,\mu F$

$X_L = 20.10\,mH \cdot 10\,k\Omega = j\,628.32$

$X_C = (1/2\pi)(0)(1\,\mu F)(10\,k\,Hz) = j\,159.13$

$Z_{23} = V_{23} = \frac{(2200)(6100 + j\,496.17)}{2200 + 1000 + j\,469.17}$

$19.33 + j\,2$

$19.33 + j\,21.7 \cdot C2$

$V_{R1C1} = V_{23} \cdot \frac{(R_1 + X_C)}{X_L + R_L + X_C}$

$0.201 - j\,0.0854$

$218\,mV\,L = 23.02$

lab: Circuits

V. load theory

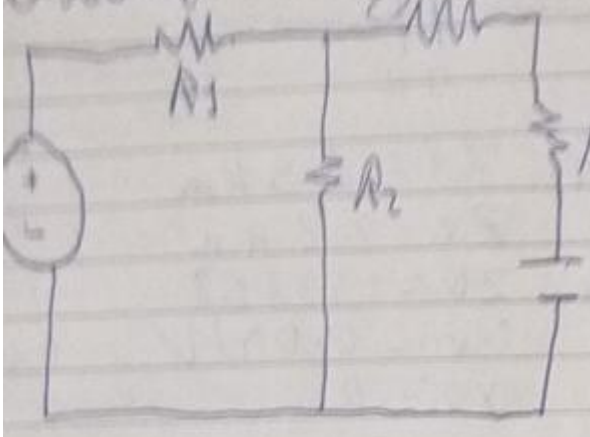

$V_{IN} = 1\,\Omega$
$R_2 = 10\,k\Omega$
$R_1 = 1.5\,k\Omega$
$R_2 = 2.2\,k\Omega$
$L = 10\,mH$
$R_1 = 1\,k\Omega$
$C = 0.1\,\mu F$

$X_L = 20.10\,mH \cdot 10\,k\Omega = j\,628.32$

$X_C = (1/2\pi)(0)(1\,\mu F)(10\,k\,Hz) = j\,159.13$

$Z_{23} = V_{23} = \frac{(2200)(6100 + j\,496.17)}{2200 + 1000 + j\,469.17}$

$19.33 + j\,2$

$19.33 + j\,21.7 \cdot C2$

$V_{R1C1} = V_{23} \cdot \frac{(R_1 + X_C)}{X_L + R_L + X_C}$

$0.201 - j\,0.0854$

$218\,mV\,L = 23.02$

Lab: Circuitos Electricos

$V_{load} = \frac{7.071 \cdot (800)}{1800} = 3.14V$

$p_{load\ exp} \frac{(3.15)^2}{500} = 12.3mW$

$V_{load} \frac{7.071 / (1700)}{2,200} = 3.86V$

$p_{load} = \frac{3.87}{1,200} = 12.48mW$

$V_{load} = \frac{7.071 (800)}{2800} = 4.54V$

$p_{load} = \frac{4.54}{1800} = 1.55mW$

$V_{load} = \frac{7.071 (3000)}{4000} = 5.3V$

$p_{load} = \frac{5.32}{3000}^2 = 9.47mW$

Credeel

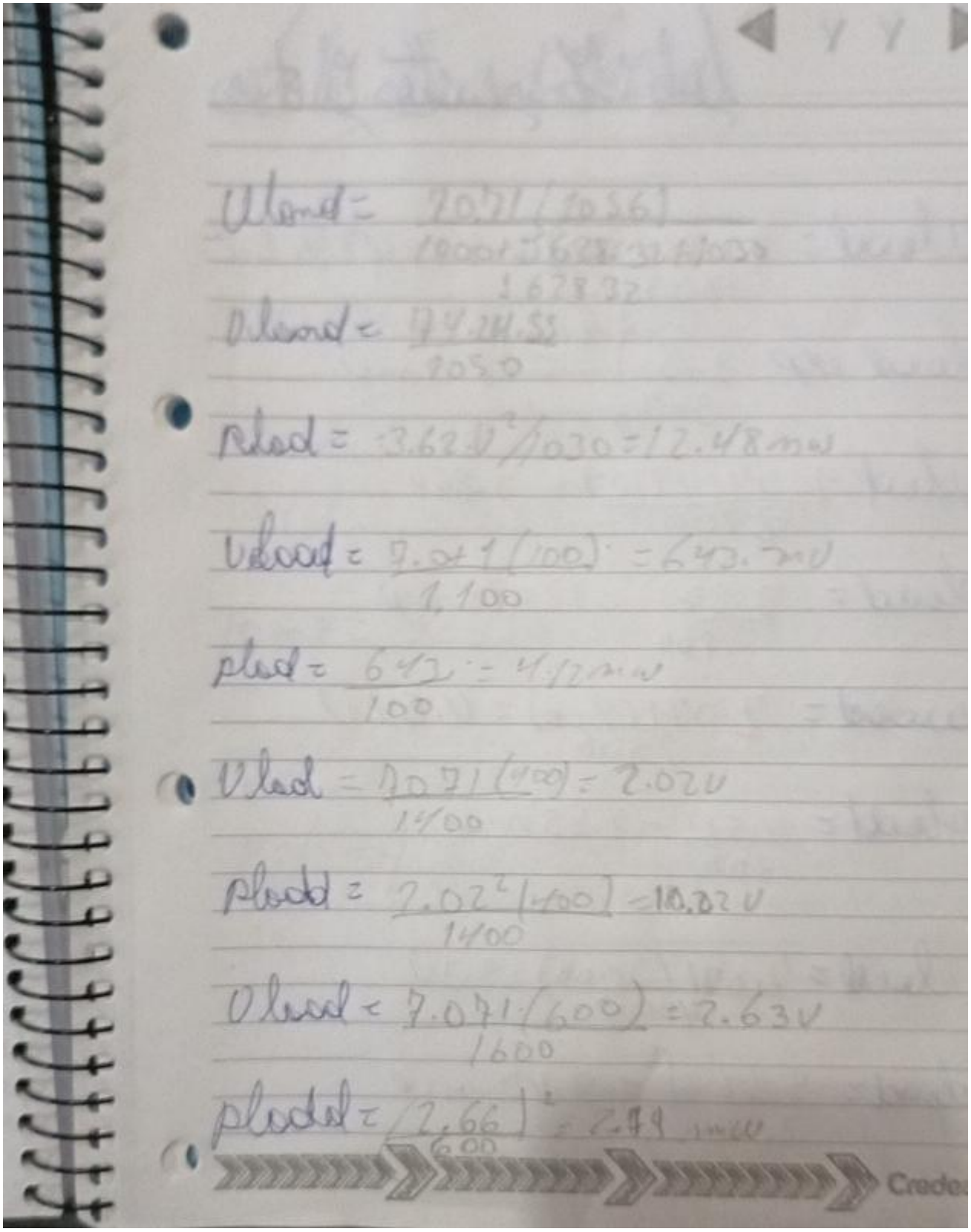

Esquema **Table 12.2**

Variable Cload

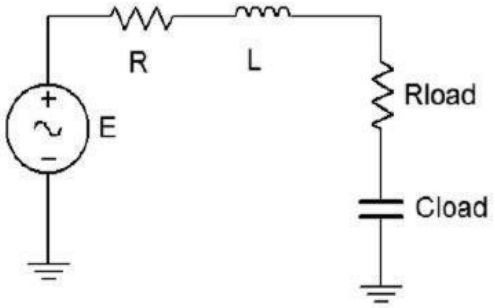

Figure 12.1

Cload	Vload Theory	Vload Exp	Pload Exp
1nF	7.31V	7.31V	225uW
3.3nF	7.47V	1.61V	2.5mW
10nF	5.95V	5.93V	10.33mW
33nF	3.97V	3.94V	12.42mW
47nF	3.78V	3.74V	12.2mW
1µF	3.57	3.55V	11.84mW

Table 12.3

Fotos de multisim

Data Tables

Variable Rload

Zsource	1223.64∠30.90 / 1223.64∠-30.90
Zload	1.05kΩ
Rload	
Cload	25.33nF

1.5kΩ

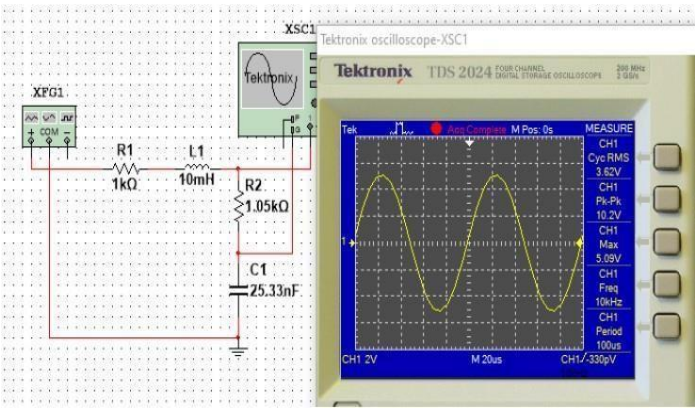

Table 12.1
Variable Rload

Rload	Vload Theory	Vload Exp	Pload Exp
1.05kΩ	3.62V	3.62V	12.48mW
100Ω	643mV	642mV	4.12mW
400Ω	2.02V	2.02V	10.2mW
600Ω	2.65V	2.66V	11.79mW
800Ω	3.14V	3.15V	12.4mW
1.2kΩ	3.86V	3.87V	1248mW
1.8kΩ	4.54V	4.56V	11.55mW
3kΩ	5.3V	5.32V	9.43mW
10kΩ	6.43V	6.42V	4.12mW

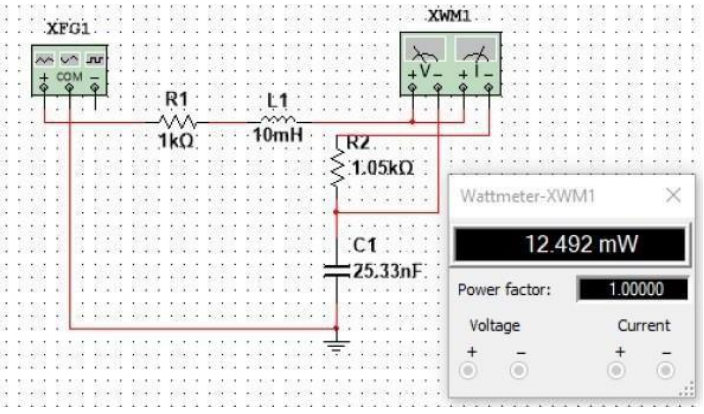

100Ω

600Ω

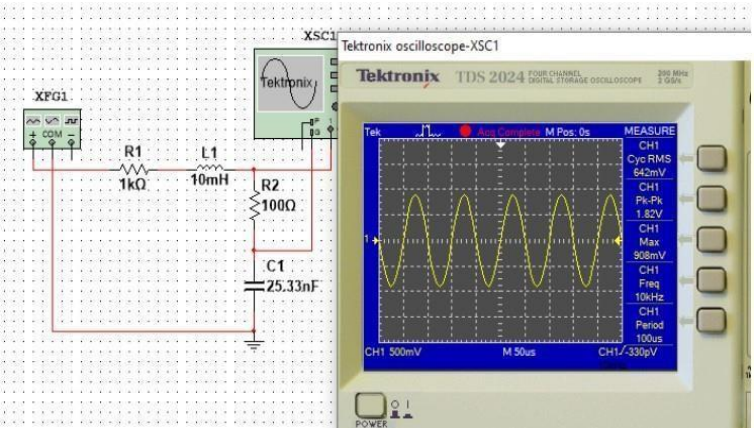
XSC1
Tektronix oscilloscope-XSC1
Tektronix
TDS 2024
XFG1
R1
1kΩ
L1
10mH
R2
100Ω
C1
25.33nF

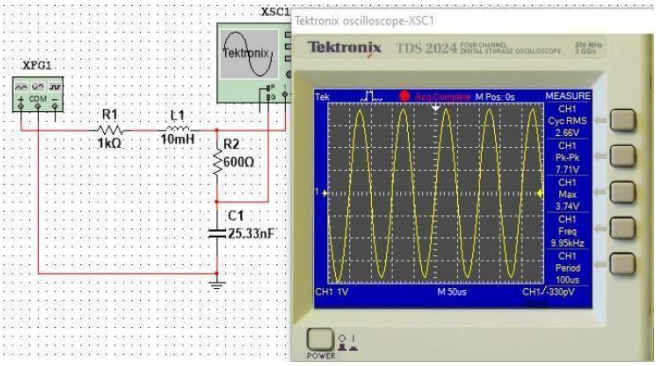
XSC1
Tektronix oscilloscope-XSC1
Tektronix
TDS 2024
XFG1
R1
1kΩ
L1
10mH
R2
600Ω
C1
25.33nF

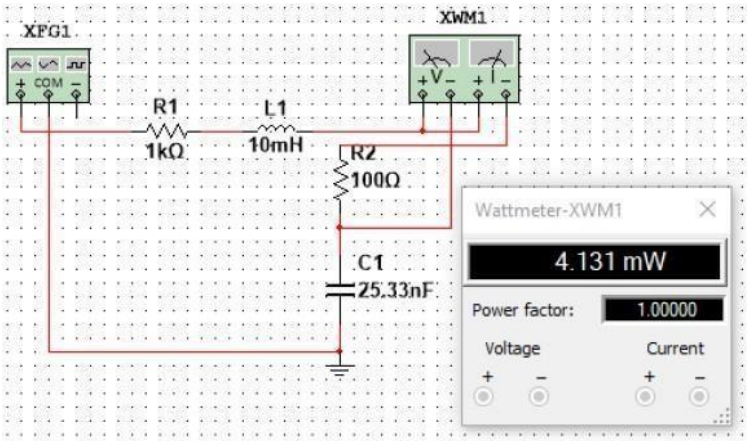
XFG1
XWM1
R1
1kΩ
L1
10mH
R2
100Ω
C1
25.33nF
Wattmeter-XWM1
4.131 mW
Power factor:
1.00000
Voltage
Current

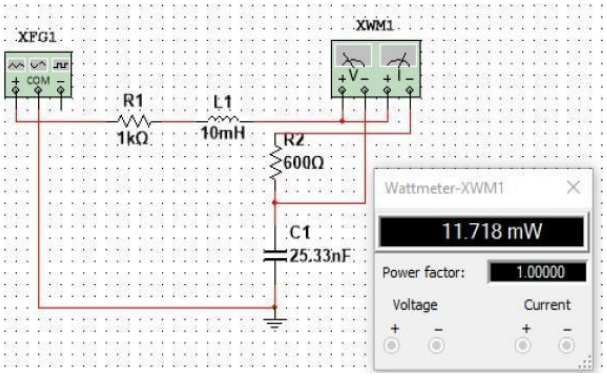
XFG1
XWM1
R1
1kΩ
L1
10mH
R2
600Ω
C1
25.33nF
Wattmeter-XWM1
11.718 mW
Power factor:
1.00000
Voltage
Current

800Ω

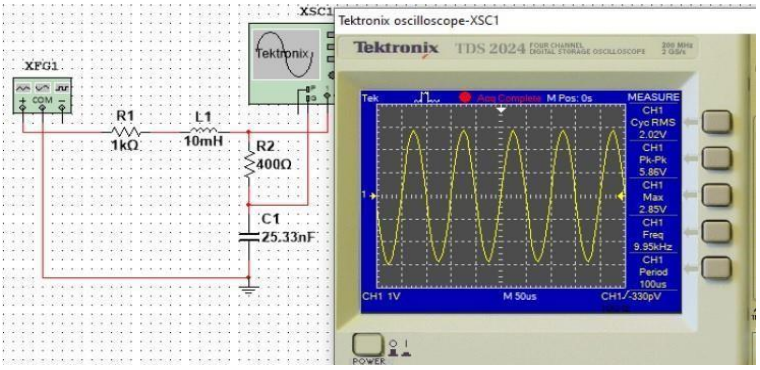
XSC1
Tektronix oscilloscope-XSC1
Tektronix
TDS 2024
XFG1
R1
1kΩ
L1
10mH
R2
400Ω
C1
25.33nF

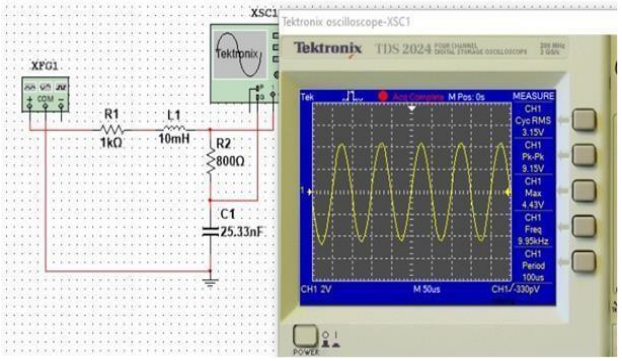
XSC1
Tektronix oscilloscope-XSC1
Tektronix
TDS 2024
XFG1
R1
1kΩ
L1
10mH
R2
800Ω
C1
25.33nF

400Ω

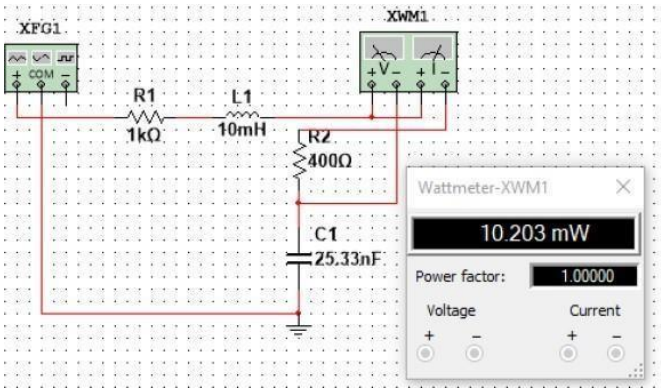
XFG1
XWM1
R1
1kΩ
L1
10mH
R2
400Ω
C1
25.33nF
Wattmeter-XWM1
10.203 mW
Power factor:
1.00000
Voltage
Current

1.2kΩ

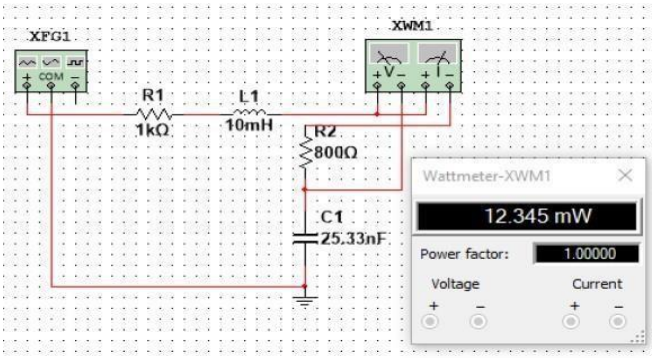
XFG1
XWM1
R1
1kΩ
L1
10mH
R2
800Ω
C1
25.33nF
Wattmeter-XWM1
12.345 mW
Power factor:
1.00000
Voltage
Current

3kΩ

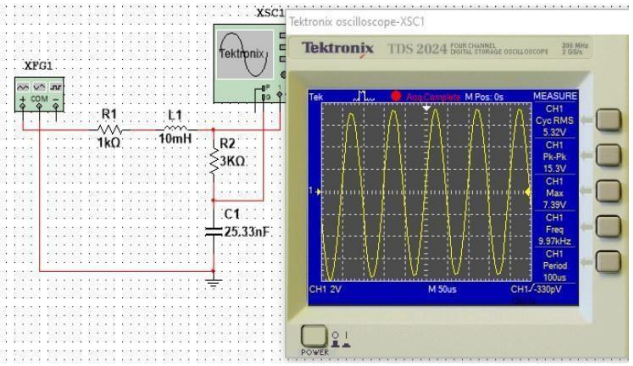
XSC1
Tektronix oscilloscope-XSC1
Tektronix
TDS 2024
XFG1
R1
1kΩ
L1
10mH
R2
3KΩ
C1
25.33nF

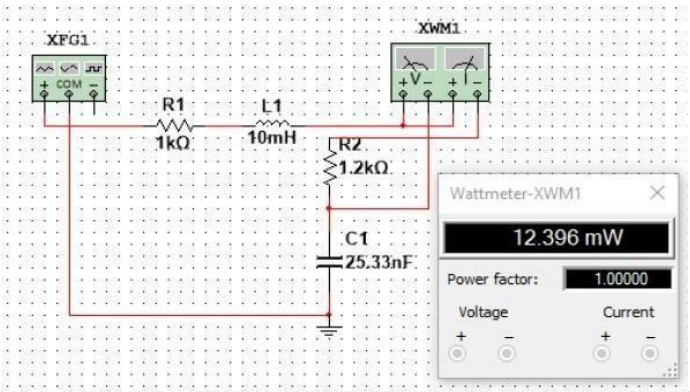
XFG1
XWM1
R1
1kΩ
L1
10mH
R2
1.2kΩ
C1
25.33nF
Wattmeter-XWM1
12.396 mW
Power factor:
1.00000
Voltage
Current

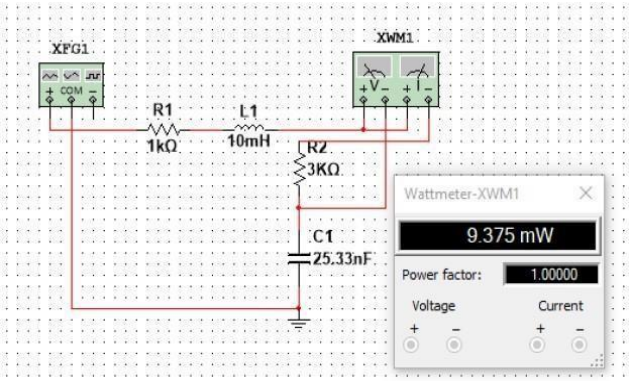
XFG1
XWM1
R1
1kΩ
L1
10mH
R2
3KΩ
C1
25.33nF
Wattmeter-XWM1
9.375 mW
Power factor:
1.00000
Voltage
Current

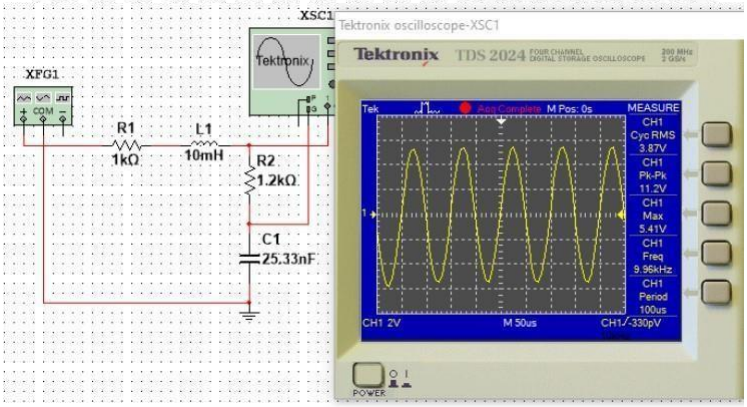
XSC1
Tektronix oscilloscope-XSC1
Tektronix
TDS 2024
XFG1
R1
1kΩ
L1
10mH
R2
1.2kΩ
C1
25.33nF

1.8kΩ

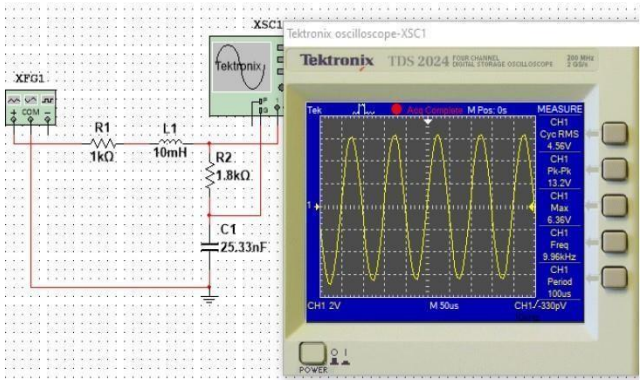

10kΩ

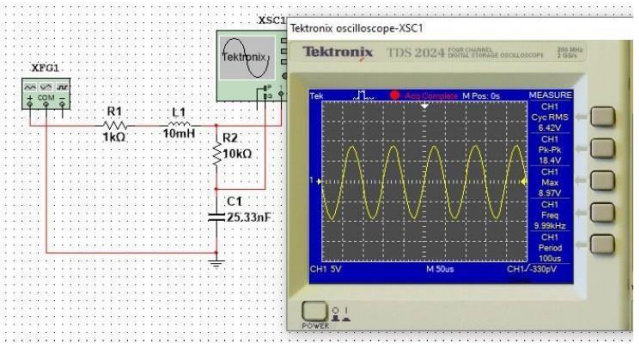

Variable Cload

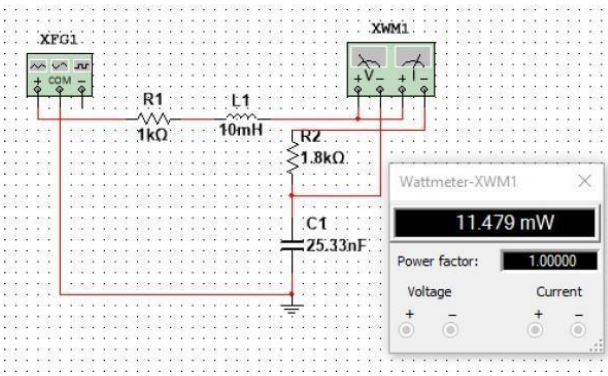

1nF

10nF

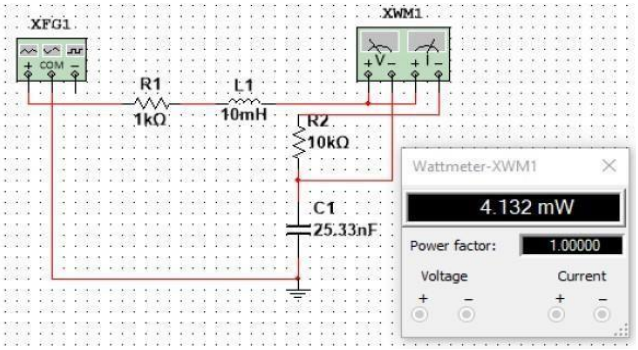

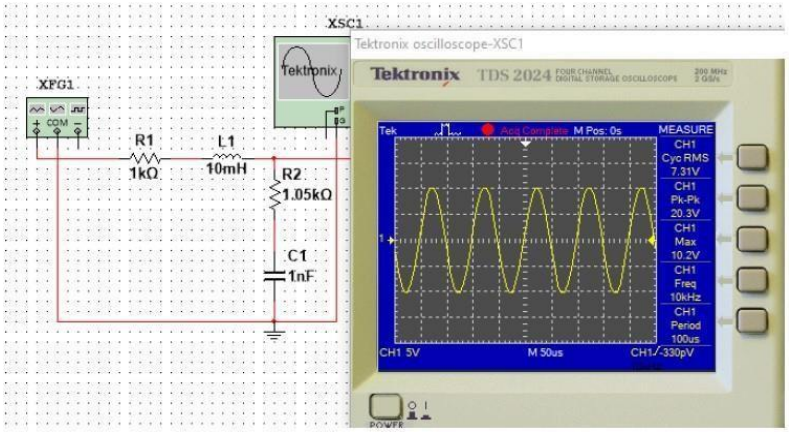

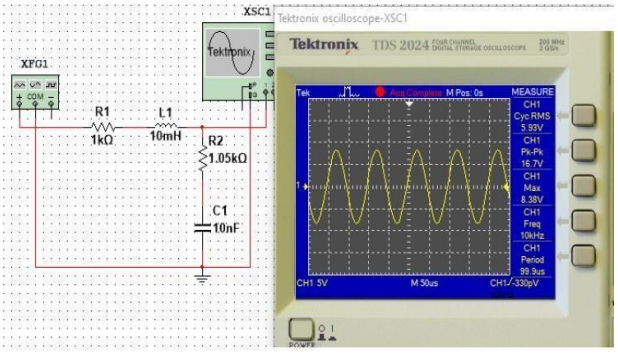

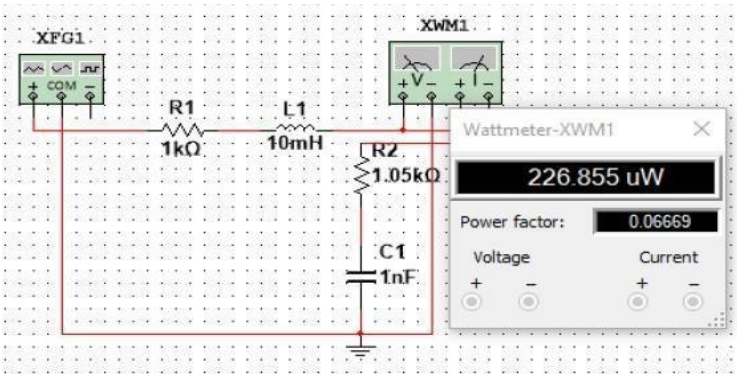

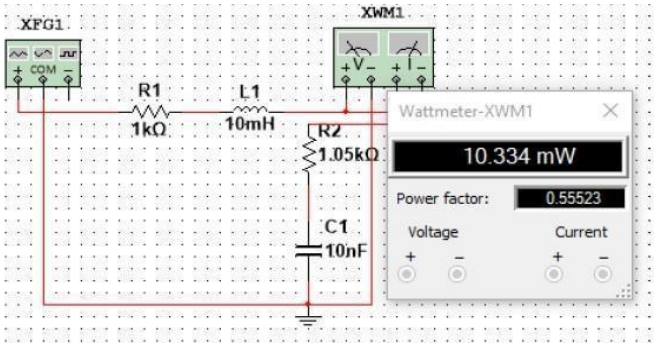

3.3nF **33nF**

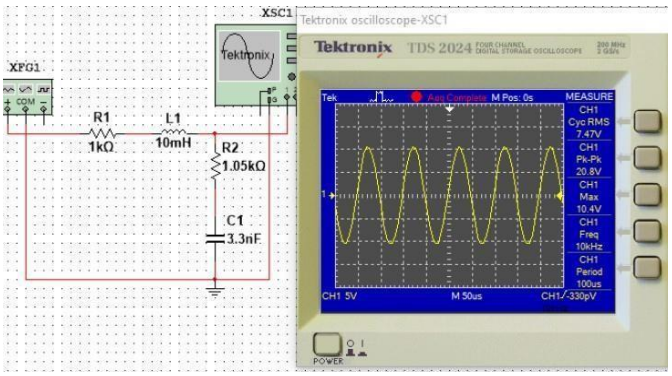

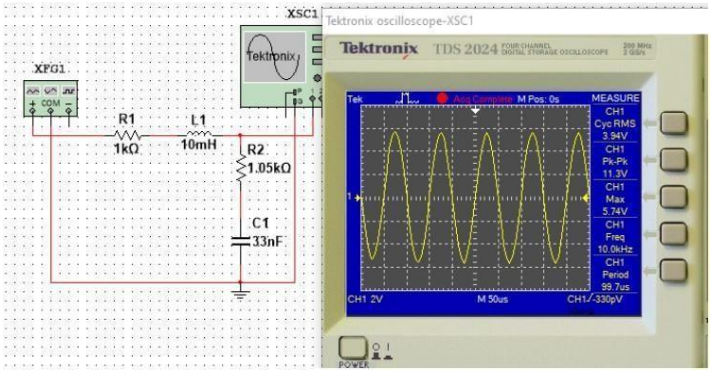

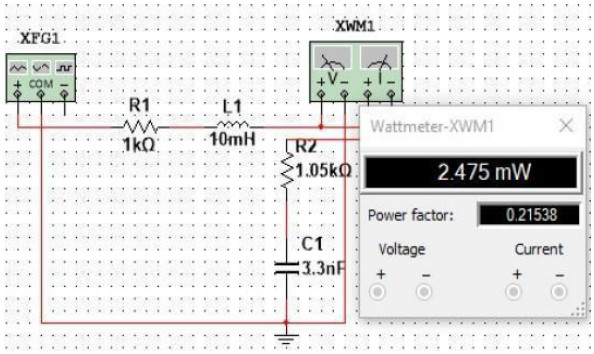

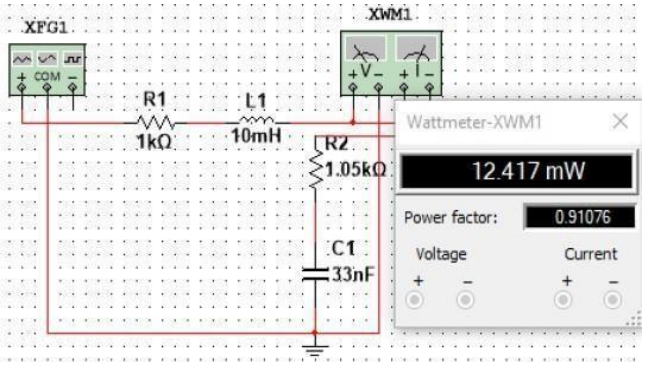

47nF

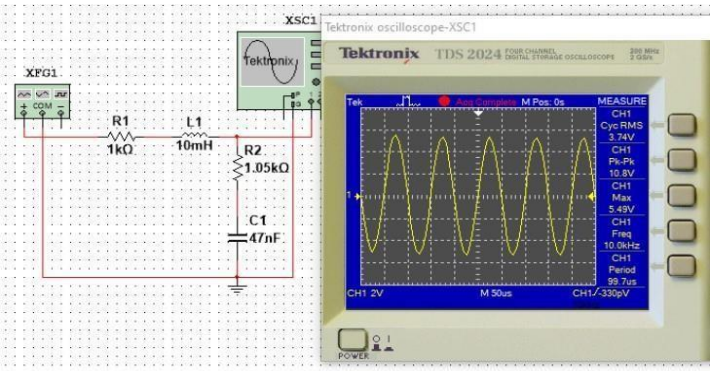

Generate a plot of Pload with respecto to Rload and another of Pload with respect to Cload.

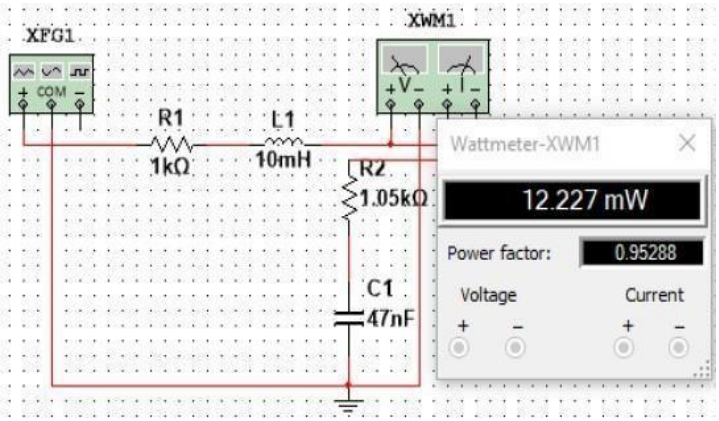

1µF

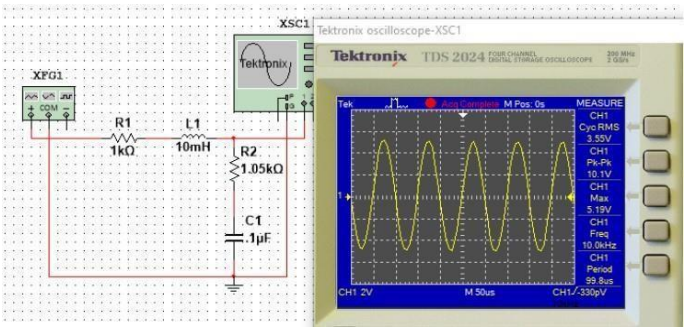
XSC1
Tektronix oscilloscope-XSC1
Tektronix
TDS 2024
XFG1
R1
1kΩ
L1
10mH
R2
1.05kΩ
C1
.1µF

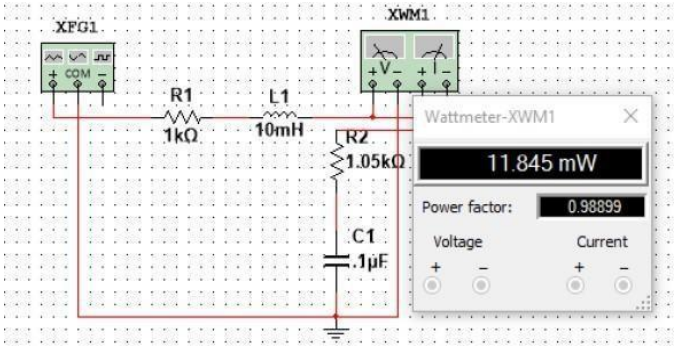
XFG1
XWM1
R1
1kΩ
L1
10mH
R2
1.05kΩ
C1
.1µF
Wattmeter-XWM1
11.845 mW
Power factor:
0.98899
Voltage
Current

Potencia en mW en función de la capacitancia en nF
14
12
10
8
6
4
2
0
0
20
40
60
80
100
120