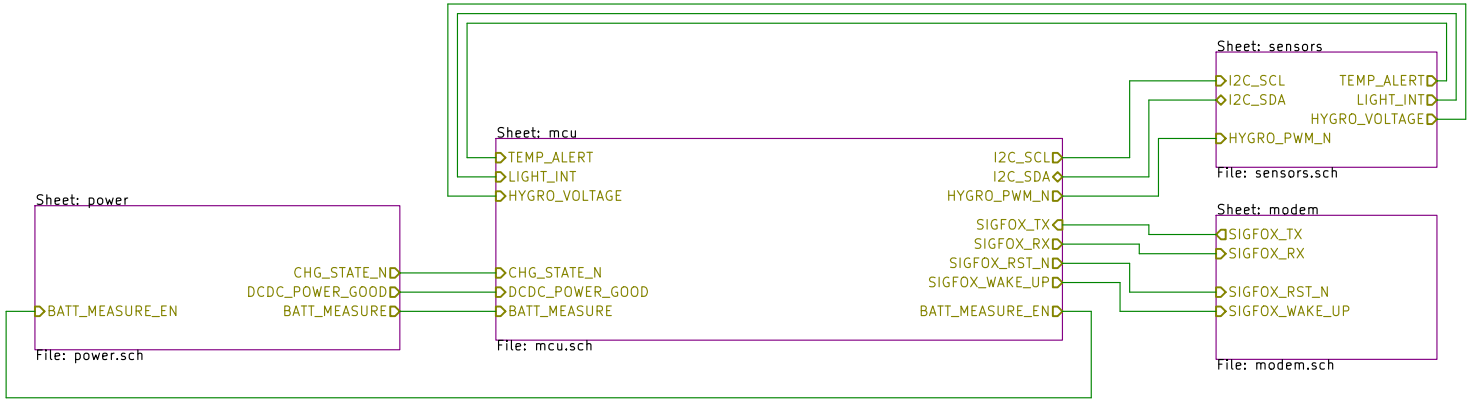

Sheet: /
File: plant_monitor.sch

Title:

Size: A4	Date:	**Rev:**
KiCad E.D.A. kicad (5.1.6)-1		Id: 1/5

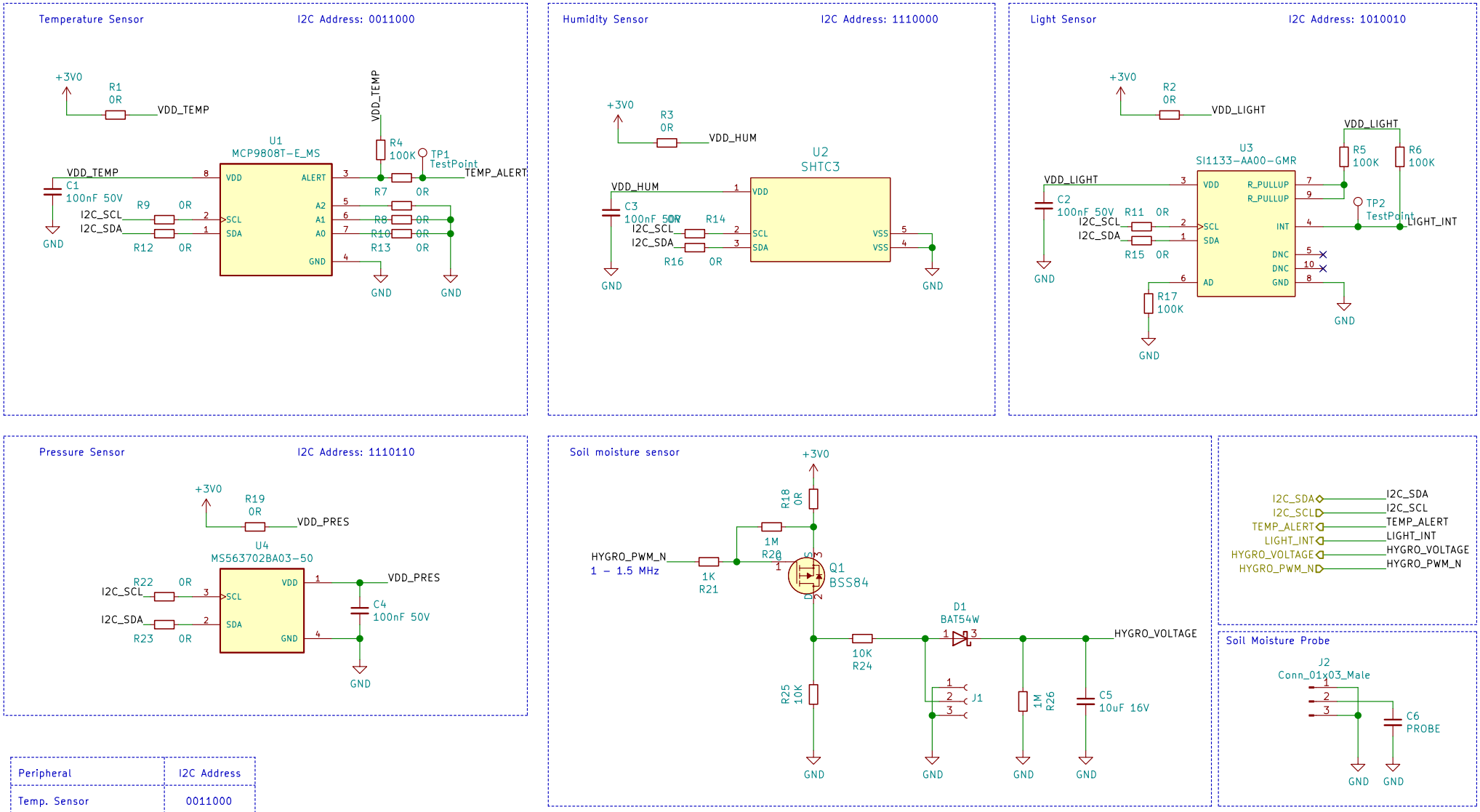

Peripheral	I2C Address
Temp. Sensor	0011000
Hum. Sensor	1110000
Light Sensor	1010010
Pressure Sensor	1110110

Sheet: /sensors/
File: sensors.sch

Title:

Size: A4 | Date: | **Rev:**

KiCad E.D.A. kicad (5.1.6)-1 | Id: 2/5

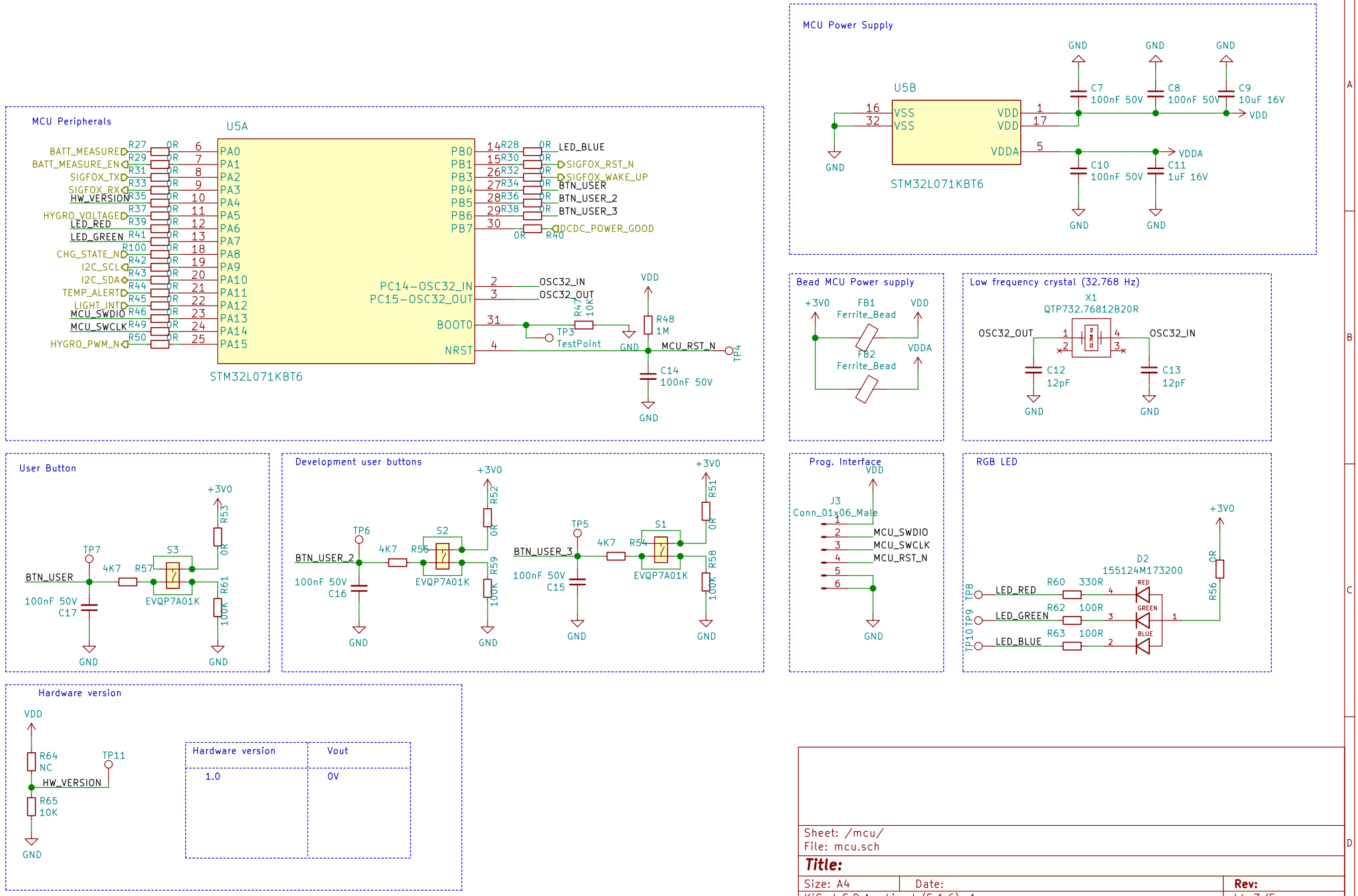
MCU Peripherals
U5A
STM32L071KBT6
BATT_MEASURE
BATT_MEASURE_EN
SIGFOX_TX
SIGFOX_RX
HW_VERSION
HYGRO_VOLTAGE
LED_RED
LED_GREEN
CHG_STATE_N
I2C_SCL
I2C_SDA
TEMP_ALERT
LIGHT_INT
MCU_SWDIO
MCU_SWCLK
HYGRO_PWM_N
LED_BLUE
SIGFOX_RST_N
SIGFOX_WAKE_UP
BTN_USER
BTN_USER_2
BTN_USER_3
DCDC_POWER_GOOD
OSC32_IN
OSC32_OUT
MCU_RST_N
TP3
TestPoint
TP4
MCU Power Supply
U5B
STM32L071KBT6
VDD
VDDA
GND
Bead MCU Power supply
+3V0
FB1
Ferrite_Bead
FB2
Ferrite_Bead
Low frequency crystal (32.768 Hz)
X1
QTP732.76812B20R
C12
12pF
C13
12pF
User Button
BTN_USER
TP7
S3
EVQP7A01K
Development user buttons
TP6
BTN_USER_2
S2
TP5
BTN_USER_3
S1
Prog. Interface
J3
Conn_01x06_Male
MCU_SWDIO
MCU_SWCLK
MCU_RST_N
RGB LED
D2
155124M173200
LED_RED
LED_GREEN
LED_BLUE
Hardware version
HW_VERSION
TP11
R64
NC
R65
10K
Hardware version
Vout
1.0
0V
Sheet: /mcu/
File: mcu.sch
Title:
Size: A4
Date:
Rev:
KiCad E.D.A. kicad (5.1.6)-1
Id: 3/5

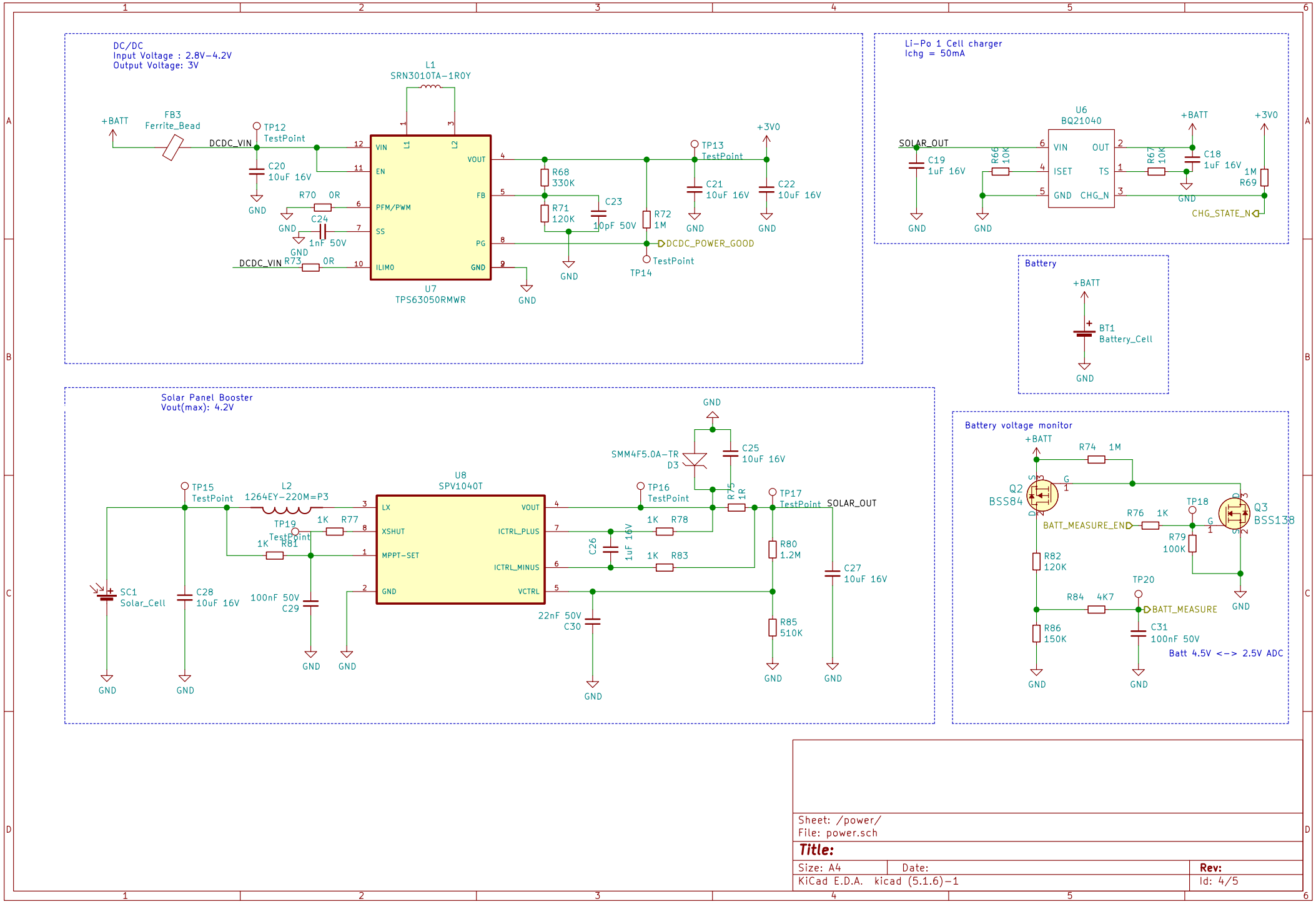
DC/DC
Input Voltage : 2.8V-4.2V
Output Voltage: 3V
+BATT
FB3
Ferrite_Bead
DCDC_VIN
TP12
TestPoint
C20
10uF 16V
GND
L1
SRN3010TA-1R0Y
VIN
EN
PFM/PWM
SS
ILIM0
VOUT
FB
PG
GND
U7
TPS63050RMWR
R70 0R
C24
1nF 50V
R73 0R
R68
330K
R71
120K
C23
10pF 50V
R72
1M
DCDC_POWER_GOOD
TP13
TestPoint
TP14
C21
10uF 16V
+3V0
C22
10uF 16V
Li-Po 1 Cell charger
Ichg = 50mA
U6
BQ21040
SOLAR_OUT
C19
1uF 16V
R66
10K
VIN
ISET
GND
OUT
TS
CHG_N
R67
10K
C18
1uF 16V
1M
R69
CHG_STATE_N
Battery
BT1
Battery_Cell
Solar Panel Booster
Vout(max): 4.2V
SC1
Solar_Cell
C28
10uF 16V
TP15
TestPoint
L2
1264EY-220M=P3
TP19
TestPoint
1K R77
1K R81
100nF 50V
C29
U8
SPV1040T
LX
XSHUT
MPPT-SET
GND
VOUT
ICTRL_PLUS
ICTRL_MINUS
VCTRL
SMM4F5.0A-TR
D3
C25
10uF 16V
TP16
TestPoint
R75
1R
1K R78
C26
1uF 16V
1K R83
22nF 50V
C30
TP17
TestPoint
SOLAR_OUT
R80
1.2M
R85
510K
C27
10uF 16V
Battery voltage monitor
R74 1M
Q2
BSS84
BATT_MEASURE_EN
R76 1K
TP18
R79
100K
Q3
BSS138
R82
120K
R84 4K7
TP20
BATT_MEASURE
C31
100nF 50V
R86
150K
Batt 4.5V <-> 2.5V ADC
Sheet: /power/
File: power.sch
Title:
Size: A4
Date:
Rev:
KiCad E.D.A. kicad (5.1.6)-1
Id: 4/5

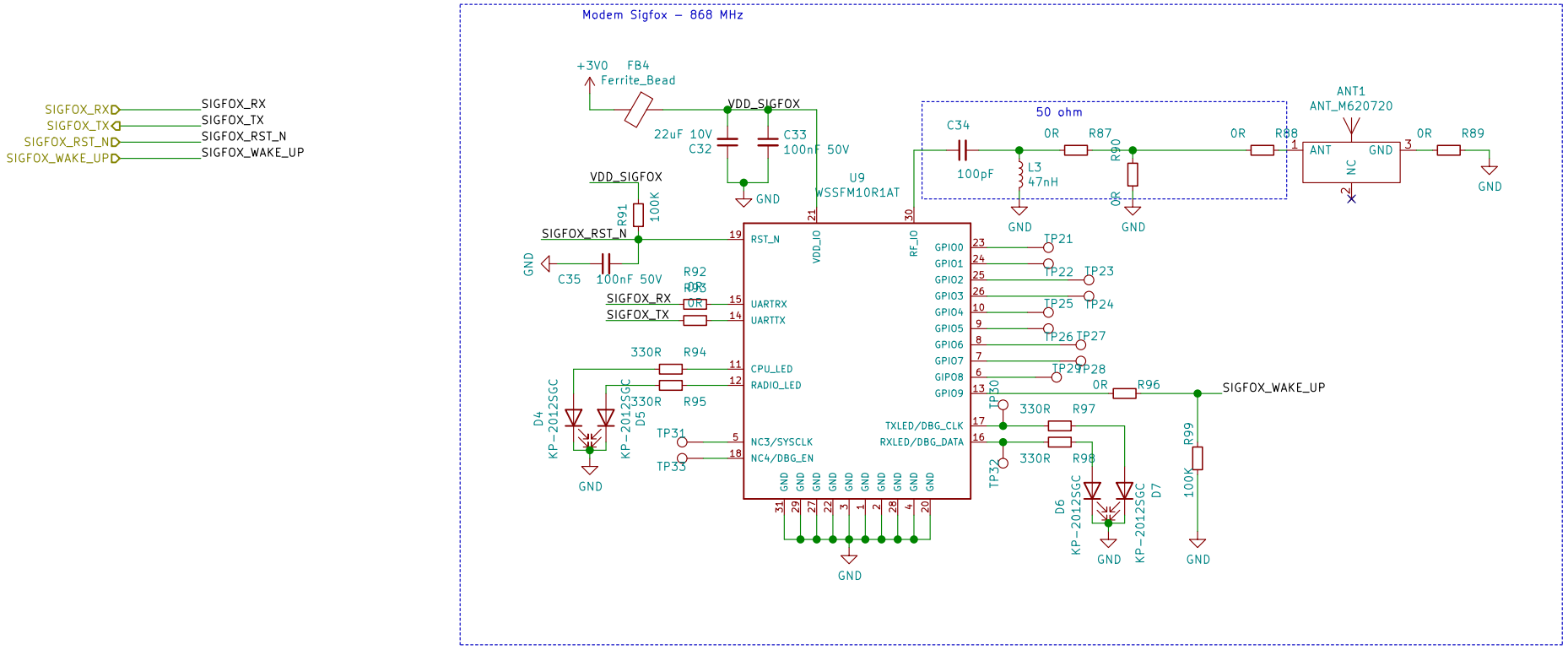

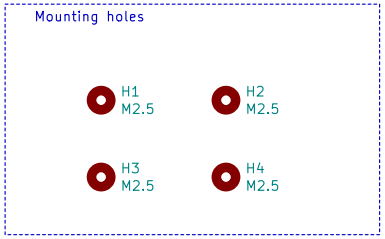

Sheet: /modem/
File: modem.sch

Title:

Size: A4	Date:	Rev:
KiCad E.D.A. kicad (5.1.6)-1		Id: 5/5