Detection and Localization of Cable Faults by Time and Frequency Domain Measurements

Qinghai Shi, Uwe Troeltzsch and Olfa Kanoun

Chair for Measurement and Sensor Technology, Chemnitz University of Technology, Chemnitz, Germany
qinghai.shi@etit.tu-chemnitz.de, kanoun@ieee.org

ABSTRACT

The localization of cable faults is very important for communication systems, power distribution systems and vehicles. Reflectometry methods are often used to detect and locate cable faults. A high-frequency signal is send down the cable. The reflected signal includes information about changes of cable impedance. With measurement of the time or phase delay the faults can be detected and located. These methods are used to detect open and short circuits. There are also techniques available for detecting frays, joints and other small anomalies. This paper describes and simulates different wire test methods that suitable for portable or in-situ test equipment and compares their advantages and disadvantages. The methods compared are the time domain reflectometry (TDR), time frequency domain reflectometry (TFDR) and frequency domain reflectometry (FDR).

Index Terms— Cable faults detection and location, Frequency domain reflectometry (FDR), digital signal processing (DSP), time domain reflectometry (TDR), time frequency domain reflectometry (TFDR) and cable fault location.

1. INTRODUCTION

Different reflectometry methods are used to detect and locate faults on wiring. Generally, a high-frequency signal is send down the cable. The reflected signal includes information about changes of cable impedance and can be therefore used to detect open and short circuits. Furthermore different techniques are available for detecting frays, joints and other small anomalies. The following sections describe several different types of reflectometry, each distinguished by the type of incident signal used [1]-[5]. Time domain reflectometry (TDR) uses a pulse or half sine signal. Frequency domain reflectometry (FDR) uses a set of stepped sine waves. Ultra wide-band (UWB) based TDR or Time-frequency Domain (TFDR) called uses a linearly modulated chirp signal with a Gaussian envelope [6]-[10]. These methods were subjected to Matlab Simulations with the aim to compare them concerning ease of use and interpretation, cost, ability to detect and locate the faults of the cable and determine the types of the faults and ability to analyze branched networks. The theoretical accuracy is compared for each method.

2. TRANSMISSION LINE MODEL

The transmission line model composes of discrete resistors, inductors, capacitors and conductance. A length z of transmission line can conceptually be divided into an infinite number of increments of length Δz (dz) such that series and shunt R', L' G' and C' are given as shown in Figure 1. Each of the parameters R', L' and G' is frequency dependent. For example, R' and L' will change in value due to skin effect and proximity effect. G' will change in value due to frequency dependent dielectric loss [11]-[16].

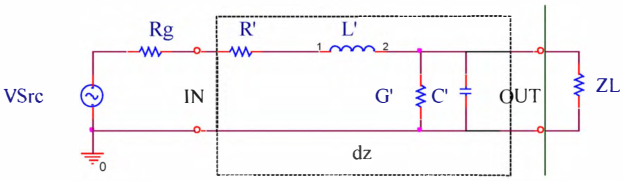

Figure 1. The model of a transmission line

V_{Src} is the voltage of signal generator. R_g is the inside resistor of signal generator. Z_L is the load impedance. The frequency dependency of the characteristic Impedance of a Transmission Line (TL) Z_0 can be described by the following equations:

$$Z_0 = \frac{\sqrt{R'+j\omega L'}}{\sqrt{G'+j\omega C'}} \quad (1)$$

The parameters ω, R', L', G' and C' which are the angular frequency ω (rad/sec), series resistance in Ω/m, series inductance in H/m, the shunt conductance in Ω^{-1}/m, and the shunt capacitance in F/m. An ideal transmission line is lossless. That is, R' and G' are zero. For such a lossless line, the characteristic impedance of the cable is given by the familiar formula:

$$Z_0 = \frac{\sqrt{L'}}{\sqrt{C'}} \quad (2)$$

The propagation constant of the transmission line with attenuation constant α and phase constant β is:

$$\gamma = \alpha + j \cdot \beta = \sqrt{(R'+j\omega L') \cdot (G'+j\omega C')} \quad (3)$$

978-1-4244-7534-6/10/$26.00 ©2010 IEEE

The cable's impedance measured at given position z from the load impedance Z_L is:

$$Z_{in}(z) = Z_0 \frac{Z_L + Z_0 \cdot \tanh(\gamma \cdot z)}{Z_0 + Z_L \cdot \tanh(\gamma \cdot z)} \quad (4)$$

For a lossless transmission line, it can be shown:

$$Z_{in}(z) = Z_0 \frac{Z_L + jZ_0 \cdot \tan(\beta \cdot z)}{Z_0 + jZ_L \cdot \tan(\beta \cdot z)} \quad (5)$$

3. TIME DOMAIN REFLECTOMETRY

TDR is the most popular technique to locate cable faults (Figure 2). The TDR method works by sending a short rectangular voltage step or a pulse down the cable. The wave can be reflected whenever a signal traveling in a cable line encounters an impedance discontinuity (Figure 3). The amount of signal reflected back is calculated by the reflection coefficient.

$$\rho = \frac{Z_L - Z_0}{Z_L + Z_0} = r \cdot e^{j\phi} = r\angle\phi \quad (6)$$

Where Z_0 is the characteristic impedance of the cable and Z_L is the impedance at the discontinuity. ρ is the reflection coefficient. The type of the faults can be estimated from the amplitude of the reflected signal. For example, the cable has an open circuit then ρ is 1, a short circuit then ρ is -1 and a matching then ρ is 0 by lossless transmission line. In the cases of short circuit, open circuit, or matching, the reflection coefficient ρ is real. However, in the cases of water, joints, and gauge changes, the reflection coefficient is complex.

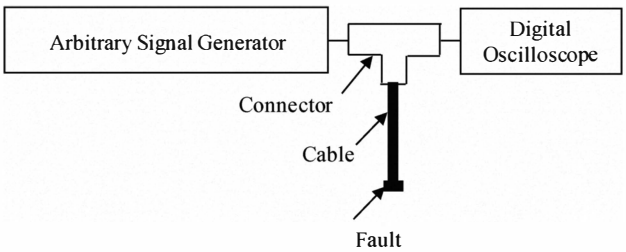

Figure 2. Block diagram of TDR system

The TDR response of a branched wire network is shown in Figure 3. The source of each reflection is marked on the figure. The distance d between a reflection point and the injection point is given by

$$d = \frac{\upsilon \cdot t}{2} \quad (7)$$

Where ν is the frequency dependent propagation velocity of the signal into the cable and t is the time interval between the incident signal and the reflected signal.

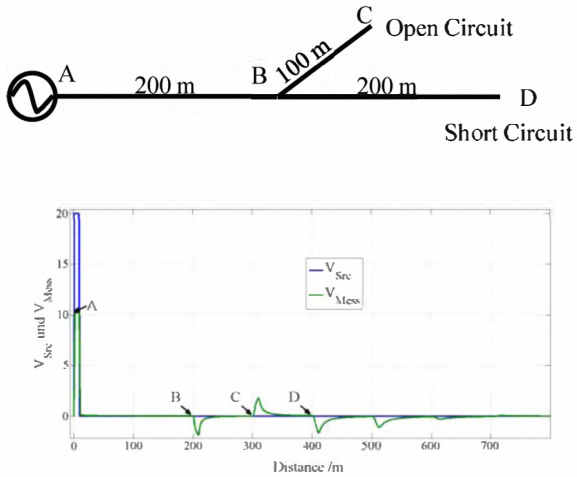

Figure 3. a) Network topology, b) TDR result of the network

The main problem in cables is to define exactly the propagation velocity ν which depends on the frequency, on wire properties and on the mode injection of the signal. To calculate the frequency dependent propagation velocity of the signal, we begin with the phase constant β (rad/meter) as given below in terms of the parameters R', L', G' and C'. Angular frequency ω (rad/sec) divided by β yields the frequency dependent propagation velocity of the signal into the cable. In practical cable application, neglecting losses, the propagation velocity ν of the cable is generally defined as a percentage of the speed of light c and can be calculated by transmission line model or measured. For a cable the propagation velocity ν of the differential mode can be approximated, neglecting losses and frequency dependent variation in the internal dielectric insulation by (9), where εr is the relative permittivity of the cable dielectric and c is the light propagation velocity $c = 3 \cdot 10^8$ m/s. This approximation used in (9) leads to a small error which does not alter significantly the defect localization for cables at high frequency.

$$\beta = \sqrt{\frac{1}{2}[\sqrt{(R'^2+\omega^2L'^2)\cdot(G'^2+\omega^2C'^2)} - R'G'+\omega^2L'C']} \quad (8)$$

$$\nu = \frac{\omega}{\beta} \cong \frac{1}{\sqrt{L'C'}} = \frac{c}{\sqrt{\varepsilon_r}} \quad (9)$$

TDR method can be easily applied, but it has some disadvantages. Large change of the impedance in the cable (open or short circuits) can be easily detected because of the large reflections but small changes of the impedance in the cable (junctions, frays, etc.) are more difficult to detect because of the smaller reflections. When the cable to be tested is too short, reflect wave can be received almost immediately after sending out the transmitted incident signal. Therefore two signals can overlap each other. Then the time interval between the incident and reflected signals is very difficult to measure

or cannot be measured. The distortion because of narrow pulse width and large frequency bandwidth would make it hard to clarify the edge of incident signal and reflected signal, thus it is impossible to measure the exact time interval. To overcome this problem, the incident signal should be narrow enough, and a fast-rise time pulse generator and a fast voltage sampler is often used to capture the time interval between the incident signal and reflected signal. This can be expensive. Moreover, the narrower the widths of the incident signal the smaller amount of the source energy and the broader the bandwidth should be. However, it causes a sharp dispersion and attenuation of the observed reflection in the time domain. The reflected signal would be sharp deformed and smaller. One of the limitations of TDR-method is all results in reflections and multiple reflections that show up in the reflectometry trace and it is difficult to extract the network topology from the reflectometry trace. Automatic methods for extracting the topology are under development and have achieved initial success. Thus, TDR-method is able to test branched networks with an automatic network topology extraction algorithm.

4. TIME FREQUENCY DOMAIN REFLECTOMETRY

TFDR works on the similar principle as the TDR method except using the incident signal that is a linear chirp signal with Gaussian envelope which is fitted in the time-frequency domain for the cable under test. The incident signal form an arbitrary waveform generator (AWG) is generated and transmitted down to the cable. When this signal reaches at the end of the cable or a fault on the cable, all or part of the incident signal can be reflected back to the point where analog-digital-converter (ADC) is (Figure 4). A coupler is used to separate the received signal coming from the cable under investigation from the incident signal.

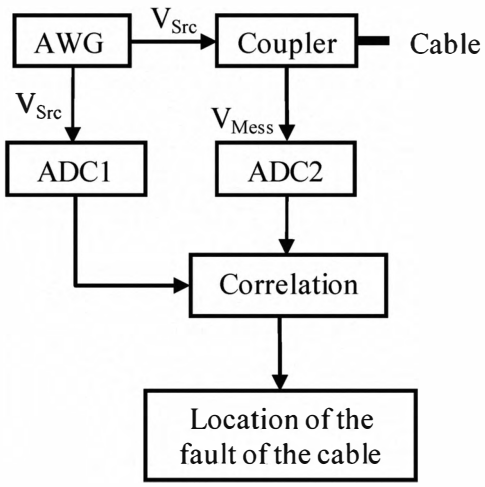

Figure 4. Block diagram of TFDR system

The cross-correlation between the incident signal and reflected signal can be used to locate the fault of the cable. The TFDR response of a branched wire network is shown in Figure 5. The source of each reflection is marked on the figure. The cross-correlation between the incident and reflected signals can be used to detect and locate the faults of the cable. h(t) is defined as the transfer function of the cable system. It is modeled as a linear filter, as

$$h(t) = \sum_{k=0}^{N-1} a_k \cdot \delta(t - \tau_k) \tag{10}$$

Where N is the number of scaled (a_k), time delayed (τ_k) represented by the Dirac delta function (δ). It is important to note that this is a wide band model that can be used to obtain the response, $V_{Mess}(t)$, of the cable to the transmission of the incident signal $V_{Src}(t)$ by convolving $V_{Src}(t)$ with h(t) and adding noise

$$V_{Mess}(t) = V_{Src}(t) \otimes h(t) + n(t) \tag{11}$$

The cross-correlation between the incident and reflected signal can be calculated:

$$\begin{aligned} r_{xy}(l) &= \sum_{n=-\infty}^{+\infty} V_{Src}(n) \cdot V_{Mess}(n-l) \\ &= \sum_{n=-\infty}^{+\infty} V_{Src}(n) \cdot (V_{Src}(n-l) \otimes h(n-l) + n(n-l)) \\ &= \sum_{n=-\infty}^{+\infty} (V_{Src}(n) \cdot V_{Src}(n-l) \otimes h(n-l) + V_{Src}(n) \cdot n(n-l)) \\ &= r_{xx}(l) \otimes h(l) + r_{xn}(l) = r_{xx}(l) \otimes h(l) \end{aligned} \tag{12}$$

Where l is number of shift parameter, r_{xy} is the cross-correlation between $V_{Src}(n)$ and $V_{Mess}(n)$, r_{xx} is the autocorrelation of the discrete incident signal $V_{Src}(n)$, r_{xn} is the cross-correlation between $V_{Src}(n)$ and the system noise n(n). r_{xn} is zero. Therefore the TFDR-method is not sensitive to noise and provides a better resolution and accuracy of the detection and localization of cable faults.

With the use of time-frequency cross-correlation function of the respective time-frequency distributions of the incident and reflected signals TFDR can detect and locate the weak reflected signals better than TDR. Therefore it contributes a better accurate and sensitive detection and localization of the faults than TDR. The distortion of the incident signal can be minimized because of the limiting the frequency bandwidth. But die advantages of TFDR-method are that, the coupler must be used to separate the incident and reflected signal, an arbitrary waveform generator with high frequency bandwidth must be used to generate an ultra wide band signal as the incident signal. They are therefore more expensive than TDR method. The types of the faults cannot be distinguished by the TFDR-method because of lose the information of the

amplitude of the reflected signals. Another disadvantage is the cable has higher attenuation at higher frequencies which limits the measurement range. So TFDR is only suitable for detection and localization of faults of short cables.

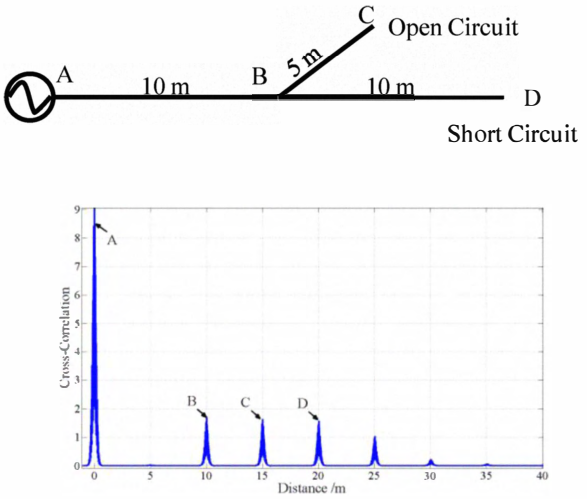

Figure 5. a) Network topology, b) TFDR cross-correlation of the network

5. FREQUENCY DOMAIN REFLECTOMETRY

A FDR block diagram shown in Figure 6, a waveform generator provides a set of sine waves that is stepped over a given bandwidth (f_s through f_e) with a frequency step size Δf. A coupler is used to separate the received signal coming from the cable under investigation from the incident signal. The mixer multiplies the two signals, which gives signals at the sum and difference of their two frequencies. The phase shift between the incident and reflected signal, which is used to determine the length of the cable and location of the faults, can be measured. An analog-to-digital converter (ADC) is used to read the mixed output signal acts as a low-pass filter (LPF) and removes the high frequency components. Then the signal is digitized, and is send to PC. The Discrete Fourier transform (DFT) is used to estimate the location of the discontinuities on the cable. With digital signal processing (DSP) the measurements of this method have much more resolution and accuracy than TDR. The location of faults by FDR is clearly visible. FDR can be set to sweep over the frequency range of an operational system, making it useful in bandwidth-limited systems.

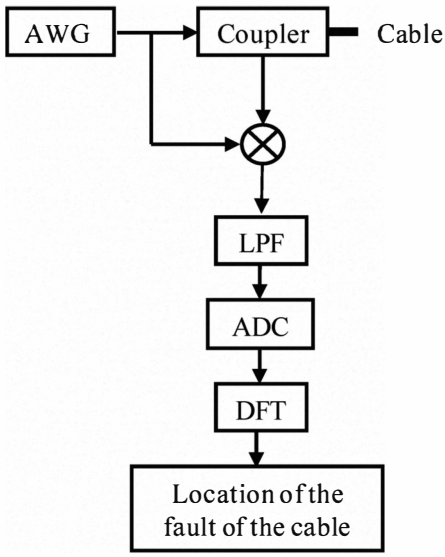

Figure 6. Block diagram of FDR system

First we consider a cable has only one fault. The incident signal travels through the cable until it reaches at the end of the cable or the fault where the impedance changes. Then all or a portion of energy can be reflected back to the transmitter. Because of the round trip, the reflected signal has a phase difference $e^{-2j\beta z}$ with respected to the transmitted signal. This is caused by the delay of the round trip. With fixed delay, the difference of phase between the transmitted and received signals increases as frequency increases. The trace from low-pass filter is stepped over a range of frequency from f_s to f_e (bandwidth $f_{BW} = f_e - f_s$) in step of Δf and is a decaying sinusoid trace as illustrated in Figure 7. The number of cycles in waveform of the trace is proportional to the distance to the fault.

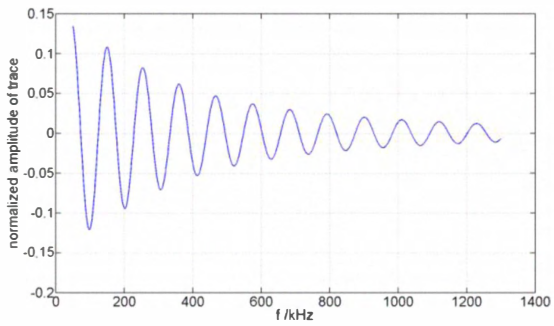

Figure 7. Normalized amplitude of the trace from low-pass filter

The FDR response of a branched wire network is shown in Figure 8. The source of each reflection is marked on the figure.

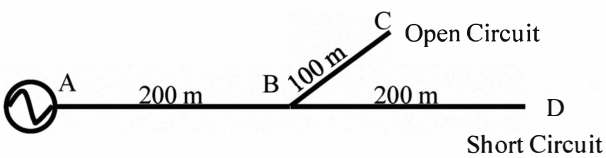

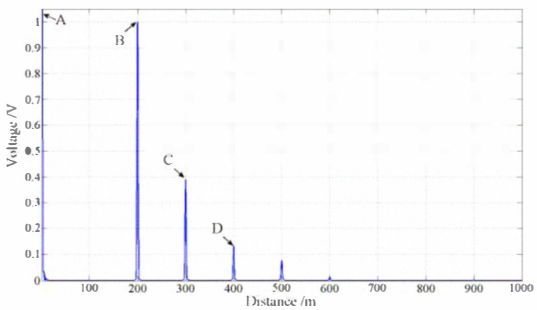

Figure 8. a) Network topology, b) Fourier transforms of the FDR of the network

The range of the system is limited by the Nyquist Criterion. As the requirement of the basic premise of communication theory the decaying sinusoid trace must be sampled twice per period in order to take an accurate DFT. The signal travels down the cable and back, the maximal cable length (Lmax) that can be measured on an ideal wire is half the allowable range and limited by the frequency step size and Nyquist criterion [17]-[18]:

$$L_{\max} = \frac{\upsilon}{4 \cdot \Delta f} \tag{13}$$

The frequency step $\Delta f = 20$ kHz are used in this research. Then the range are 2500m and 50m for cables with a propagation velocity approximately 2/3 the speed of light. The accuracy of distance measurement (L_{min}) is decided by the resolution of the DFT (N_{DFT}) that is used to find the number of cycle of the amplitude of the cable's impedance and given by equation (14) with the number of points in the DFT (N_{DFT}). For this system with $\Delta f = 20$ kHz and $N_{DFT} = 2048$, the accuracy of this system is 2.44m by $\Delta f = 20$ kHz.

$$L_{\min} = \frac{\upsilon}{2N_{DFT}\Delta f} \tag{14}$$

When compared with TDR-method, FDR-method provides better sensitivity and resolution. The faults of the cable can more accurately detect and located. The disadvantages are that the expensive directional coupler must be used to separate the incident and reflected signals; the types of the faults cannot be exactly distinguished.

6. CONCLUSION

The Properties of TDR, TFDR and FDR-method are compared and summarized in this section. The transmission line mode for twisted pair cable is used to simulate in these methods. Actually all of these methods can be used to detect and locate faults in coaxial cable.

All of the reflectometry methods have the potential to locate and detect faults on branched wire network. Individual peaks will be shown in their response for each reflection point. TDR-method is easy to realize and can identify the type of cable faults. Therefore there are several TDR products available on the market. But TDR-method is sensitive to noise. Any noise which may be as large as or larger than the TDR signal will corrupt the TDR trace. Then the time interval between the incident and reflected signals cannot exactly be measured. Large change of the impedance in the cable can be easily detected because of the large reflections but small changes of cable impedance are more difficult to detect because of the smaller reflections. When the cable is shorter than 100 meter, the sample time must be smaller than 100ns and the incident signal should be narrow enough. Then a fast-rise time pulse generator and a fast voltage sampler are often used to capture the time interval between the incident signal and reflected signal. This can be expensive. Moreover, the narrower the widths of the incident signal the smaller amount of the source energy and the broader the bandwidth should be. However, it causes a sharp dispersion and attenuation of the observed reflection in the time domain. The reflected signal would be sharp deformed and smaller. TFDR-method provides better resolution, accuracy than TDR-method. The weak reflected signal can be detected by TFDR-method. The incident signal can be designed flexibility by depending on the physical characteristics of test cable system. But this method lost the information of the amplitude of the reflected signal and cannot identify the type of the faults. Because of strong attenuation and distortion of the ultra wide band signal TFDR-method is only suitable for the cable shorter than 100 meter. FDR-method provides better resolution than TDR-method and longer measurement range (to kilometer) than TFDR-method.

The spatial resolution, accuracy and measurement range are dependent on the specific settings and engineering designs of each system. For example, increasing the bandwidth of FDR and TFDR-method or decreasing the rise time of TDR-method and increasing the sample rate of analog-digital-converter (ADC) of TDR-method improve the accuracy. Increasing the period and amplitude of the incident signal of TDR-method or increasing the number of frequency samples of FDR method improves the maximum measurement range.

Evaluation – Method	Cost	Identification of the type of the faults	Detection of weak impedance change	Spatial resolution	Measurement range
TDR	++	+	-	-	+
FDR	+	-	+	+	+
TFDR	-	-	+	+	-

Table 1. Comparison of reflectometry methods

(+: advantage; -: disadvantage)

7. REFERENCES

[1] Boets, P.; Bostoen, T.; Van Biesen, L. & Pollet, T. Preprocessing of Signals for Single-Ended Subscriber Line Testing *Instrumentation and Measurement, IEEE Transactions on,* 2006*, 55*, 1509-151856-58.

[2] Chung, Y. C.; Furse, C. & Pruitt, J. Application of phase detection frequency domain reflectometry for locating faults in an F-18 flight control harness *Electromagnetic Compatibility, IEEE Transactions on,* 2005*, 47*, 327-334

[3] Buccella, C.; Feliziani, M. & Manzi, G. Detection and localization of defects in shielded cables by time-domain measurements with UWB pulse injection and clean algorithm postprocessing *Electromagnetic Compatibility, IEEE Transactions on*, 2004*, 46*, 597-605

[4] Carravetta, A.; D'Arco, M. & Pasquino, N. A ground monitoring system based on TDR tests *Intrumentation and Measurement Technology Conference, 2009. I2MTC '09. IEEE,* 2009, 244-248

[5] Sharma, C. R. & Cynthia Furse and Reid R. Harrison Low Power CMOS-Sensor for locating faluts in aging aircraft wiring IEEE Sensors Journal, IEEE, 01.2007, 7, 43-50

[6] Time Domain Reflectometry Theory, Application Note 1304-2, Agilent Technologies, Aug. 2002, www.agilent.com.

[7] Crapse, P.; Wang, J.; Shin, Y.-J.; Dougal, R.; Mai, T.; Molnar, J. & Lan, T. Design of optimized reference signal for Joint Time-Frequency Domain Reflectometry-based wiring diagnostics *AUTOTESTCON, 2008 IEEE,* 2008, 195-201

[8] Shinagawa, H.; Suzuki, T.; Noda, M.; Shimura, Y.; Enoki, S. & Mizuno, T. Theoretical Analysis of AC Resistance in Coil Using Magnetoplated Wire *Magnetics, IEEE Transactions on,* 2009*, 45*, 3251 -3259

[9] Hayden, L. & Tripathi, V. Characterization and modeling of multiple line interconnections from time domain measurements Microwave Theory and Techniques, IEEE Transactions on, 1994, 42, 1737-1743

[10] Paulter, N. Long-term repeatability of a TDR-based printed wiring board dielectric constant measurement system Instrumentation and Measurement, IEEE Transactions on, 1998, 47, 1469-1473

[11] Siebert, K.; Gunther, H.; Frei, S. and Mickisch, W. Modeling of Frequency Dependent Losses of Transmission Lines with VHDL-AMS in Time Domain Electromagnetic Compatibility, 2009 20th International Zurich Symposium on, 2009, 313-316

[12] Lee, M.; Kramer, B.; Chen, C.-C. and Volakis, J. Distributed Lumped Loads and Lossy Transmission Line Model for Wideband Spiral Antenna Miniaturization and Characterization *Antennas and Propagation, IEEE Transactions on,* 2007*, 55*, 2671-2678

[13] Weens, Y.; Idir, N.; Bausiere, R. & Franchaud, J. Modeling and simulation of unshielded and shielded energy cables in frequency and time domains Magnetics, IEEE Transactions on, 2006, 42, 1876-1882

[14] Lo, C. & Furse, C. Modeling and simulation of branched wiring network Electromagnetic Compatibility, 2006. EMC-Zurich 2006. 17th International Zurich Symposium on, 2006, 53-56

[15] Kordi, B.; LoVetri, J. & Bridges, G. Finite-difference analysis of dispersive transmission lines within a circuit simulator Power Delivery, IEEE Transactions on, 2006, 21, 234-242

[16] Brian C. Wadell Transmission Lines Design Handbook, Artech House Inc, 1991, 500,200-300.

[17] S. Haykin, "Digitla Communication", New York, Wiley, 1988.

[18] J. G. Proakis and D. G. Manolakis Digital Signal Processing Principles, Algorithms, and Applications, Fourth Edition, Pearson Education, Inc, Prentice Hall, 2007