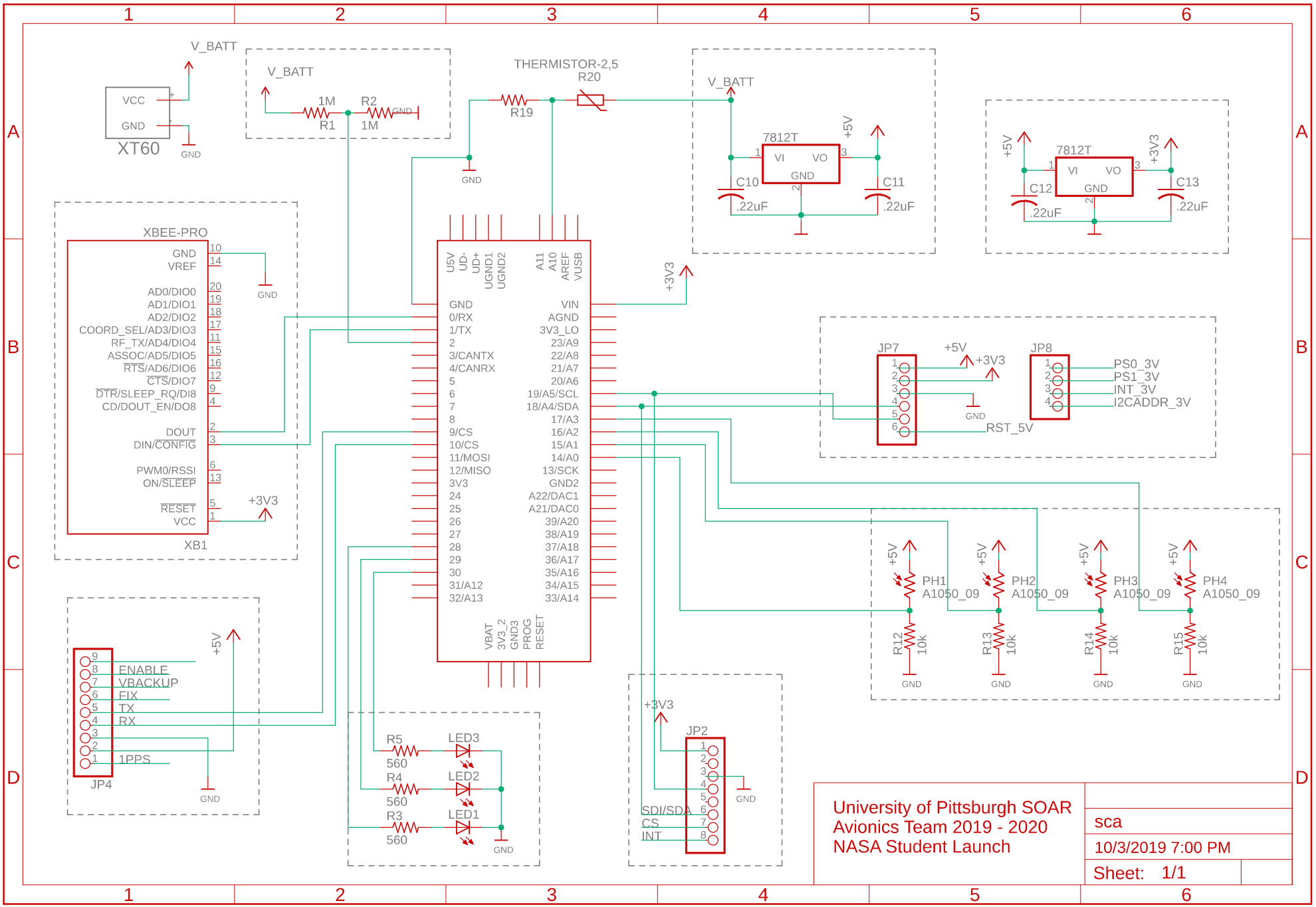
V_BATT
VCC
GND
XT60
GND
V_BATT
1M
R1
R2
1M
GND
THERMISTOR-2,5
R20
R19
GND
V_BATT
7812T
VI
VO
GND
+5V
C10
.22uF
C11
.22uF
+5V
7812T
VI
VO
GND
+3V3
C12
.22uF
C13
.22uF
XBEE-PRO
GND
VREF
AD0/DIO0
AD1/DIO1
AD2/DIO2
COORD_SEL/AD3/DIO3
RF_TX/AD4/DIO4
ASSOC/AD5/DIO5
RTS/AD6/DIO6
CTS/DIO7
DTR/SLEEP_RQ/DI8
CD/DOUT_EN/DO8
DOUT
DIN/CONFIG
PWM0/RSSI
ON/SLEEP
RESET
VCC
+3V3
XB1
U5V
UD-
UD+
UGND1
UGND2
A11
A10
AREF
VUSB
GND
0/RX
1/TX
2
3/CANTX
4/CANRX
5
6
7
8
9/CS
10/CS
11/MOSI
12/MISO
3V3
24
25
26
27
28
29
30
31/A12
32/A13
VIN
AGND
3V3_LO
23/A9
22/A8
21/A7
20/A6
19/A5/SCL
18/A4/SDA
17/A3
16/A2
15/A1
14/A0
13/SCK
GND2
A22/DAC1
A21/DAC0
39/A20
38/A19
37/A18
36/A17
35/A16
34/A15
33/A14
VBAT
3V3_2
GND3
PROG
RESET
+3V3
JP7
+5V
+3V3
GND
RST_5V
JP8
PS0_3V
PS1_3V
INT_3V
I2CADDR_3V
+5V
PH1
A1050_09
R12
10k
GND
+5V
PH2
A1050_09
R13
10k
GND
+5V
PH3
A1050_09
R14
10k
GND
+5V
PH4
A1050_09
R15
10k
GND
+5V
ENABLE
VBACKUP
FIX
TX
RX
1PPS
JP4
GND
R5
560
LED3
R4
560
LED2
R3
560
LED1
GND
+3V3
JP2
GND
SDI/SDA
CS
INT
University of Pittsburgh SOAR
Avionics Team 2019 - 2020
NASA Student Launch
sca
10/3/2019 7:00 PM
Sheet: 1/1