Lecture 19 – Electrons

Parker Lamb

2020-02-18

Contents

1 Thermal Speed v. Drift Speed **2**
1.1 Mean speed of electrons in a conductor 2
1.2 Calculating electron speed in copper wire 2
1.3 Speed of an electron through a 1m circuit 3

2 Electron Current vs. Conventional Current **3**
2.1 Direction 3
2.2 Question 27.4 3

3 Resistivity and Conductivity **4**

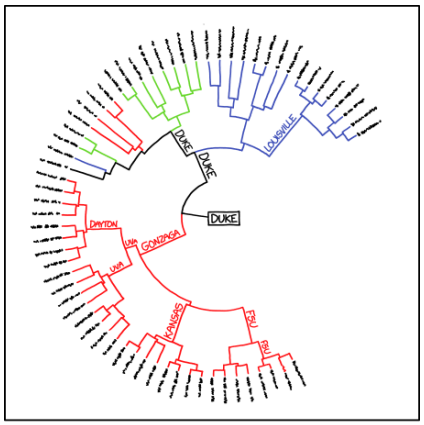

I WAS KICKED OFF THE BIOLOGY PROJECT AFTER I SECRETLY REPLACED ALL THE PHYLOGENETIC TREES IN OUR NEW PAPER WITH MARCH MADNESS BRACKETS.

1 Thermal Speed v. Drift Speed

1.1 Mean speed of electrons in a conductor

Modeled as a gas, based on the Maxwell-Boltzman distribution functions –

$$< v >= \sqrt{\frac{8kT}{\pi m}}$$

Where $k = 1.38 \times 10^{-23}$, the Boltzman constant.

$$v = \sqrt{\frac{8 * 1.38 \times 10^{23} * 300}{\pi * 9.11 \times 10^{-31}}}$$

1.2 Calculating electron speed in copper wire

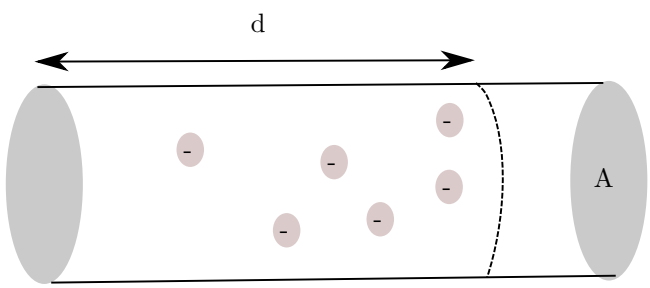

Figure 1: 1mm-diameter wire

- V_d = Average velocity attained by charged particles in an electric field.
- n_e = Number of 'free' electrons per unit volume (density).
- $n_e V$ = number of electrons
- $n_e Ad$ = number of electrons over distance d
- $en_e Ad$ = total charge in distance d

Now, since $I = \frac{Q}{t}$, and $v_d = \frac{d}{t}$

$$I = \frac{Q}{t} = \frac{en_e Ad}{\frac{d}{V_d}} = en_e Av_d$$

Now, to solve for v_d, given that $e = 1.6 \times 10^{-19}$, $n_e = 8.5 \times 10^{28} m^{-3}$ (for copper), and $A = \pi r^2 = \pi(\frac{10^{-3}}{2})^2$:

$$V_d = \frac{I}{en_eA} = 2 \times 10^{-5}$$

1.3 Speed of an electron through a 1m circuit

How long would it take an electron to travel around a 1m circuit, given $V_d = 2 \times 10^{-5}$?

$$V_d = \frac{x}{t}$$

so,

$$t = \frac{x}{V_d} = \frac{1}{2 \times 10^{-5}} = 50,000s = 13.9h$$

If elctrons move so slowly, why is it that electrical appliances are capable of operating so quickly?

The answer, is that electrons tend to operate similar to how a liquid does. Creating a force on any one electron will affect all the others to the eventual destination.

2 Electron Current vs. Conventional Current

i_e = number of electrons passing a point in the circuit per unit time = electron current.

$$i_e = \frac{I}{e} = \frac{en_eAv_d}{e} = n_eAv_d$$

2.1 Direction

Conventional current I is in the opposite direction of the flow of electrons. This was a consequence of the lack of knowledge that electrical current was in fact the result of a negative electron; it was believed that electrical current was caused by a *positive* particle.

2.2 Question 27.4

Electrons flow through a 1.6mm diameter wire at $2 \times 10^4 \frac{m}{s}$. How many electrons pass this point per day? (Wire is aluminium, where electron density is $n_e = 6 \times 10^{28} m^{-3}$).

We know that current is equal to $I = \frac{N}{t}$. Therefore,

$$N = i_e t = n_e A v_d t$$

$$N = 6 \times 10^{28} (\pi \frac{1.6 \times 10^{-3}}{2})^{2} \, 2 \times 10^4 (60 * 60 * 24) = 2 \times 10^{24}$$

3 Resistivity and Conductivity

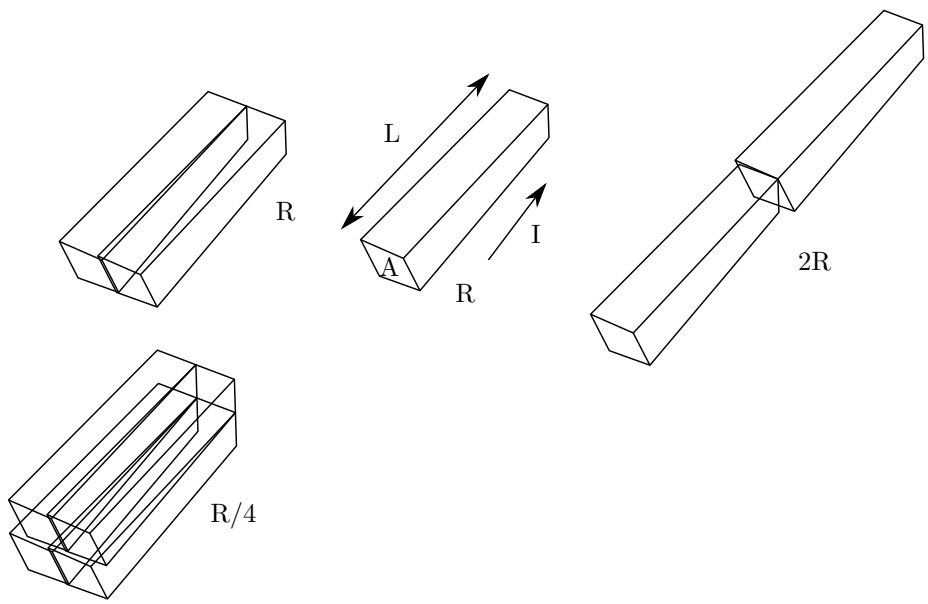

Figure 2: Imperfect conductor

$$R = \rho \frac{L}{A}$$

Where ρ is resistivity, L is length and A is cross-sectional area.