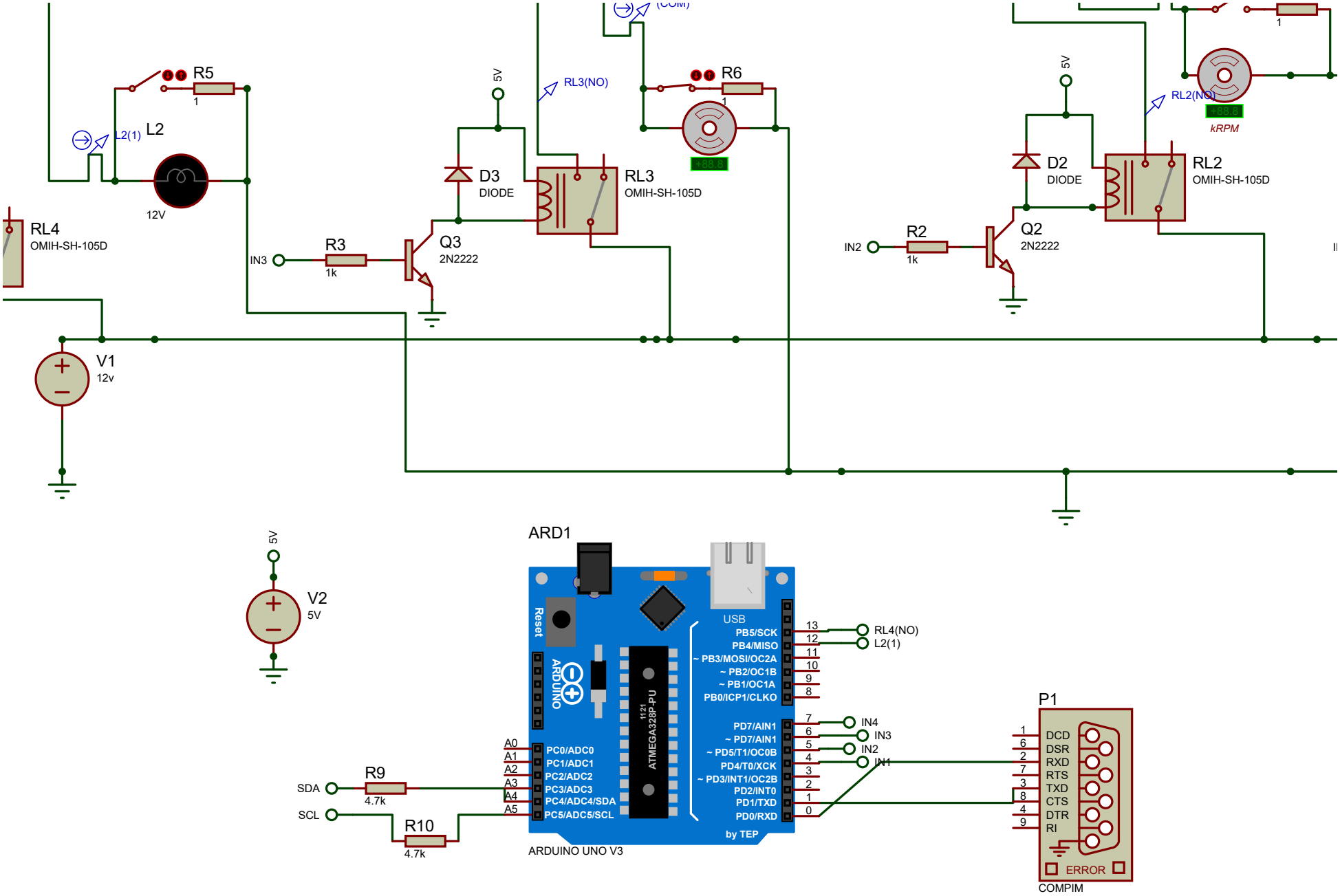
R5
1
L2(1)
L2
12V
RL4
OMIH-SH-105D
V1
12v
IN3
R3
1k
Q3
2N2222
D3
DIODE
5V
RL3(NO)
RL3
OMIH-SH-105D
R6
1
+88.8
IN2
R2
1k
Q2
2N2222
D2
DIODE
5V
RL2(NO)
RL2
OMIH-SH-105D
kRPM
V2
5V
ARD1
Reset
USB
PB5/SCK
PB4/MISO
~ PB3/MOSI/OC2A
~ PB2/OC1B
~ PB1/OC1A
PB0/ICP1/CLKO
PD7/AIN1
~ PD7/AIN1
~ PD5/T1/OC0B
PD4/T0/XCK
~ PD3/INT1/OC2B
PD2/INT0
PD1/TXD
PD0/RXD
PC0/ADC0
PC1/ADC1
PC2/ADC2
PC3/ADC3
PC4/ADC4/SDA
PC5/ADC5/SCL
ATMEGA328P-PU
by TEP
ARDUINO UNO V3
RL4(NO)
L2(1)
IN4
IN3
IN2
IN1
SDA
SCL
R9
4.7k
R10
4.7k
P1
DCD
DSR
RXD
RTS
TXD
CTS
DTR
RI
ERROR
COMPIM