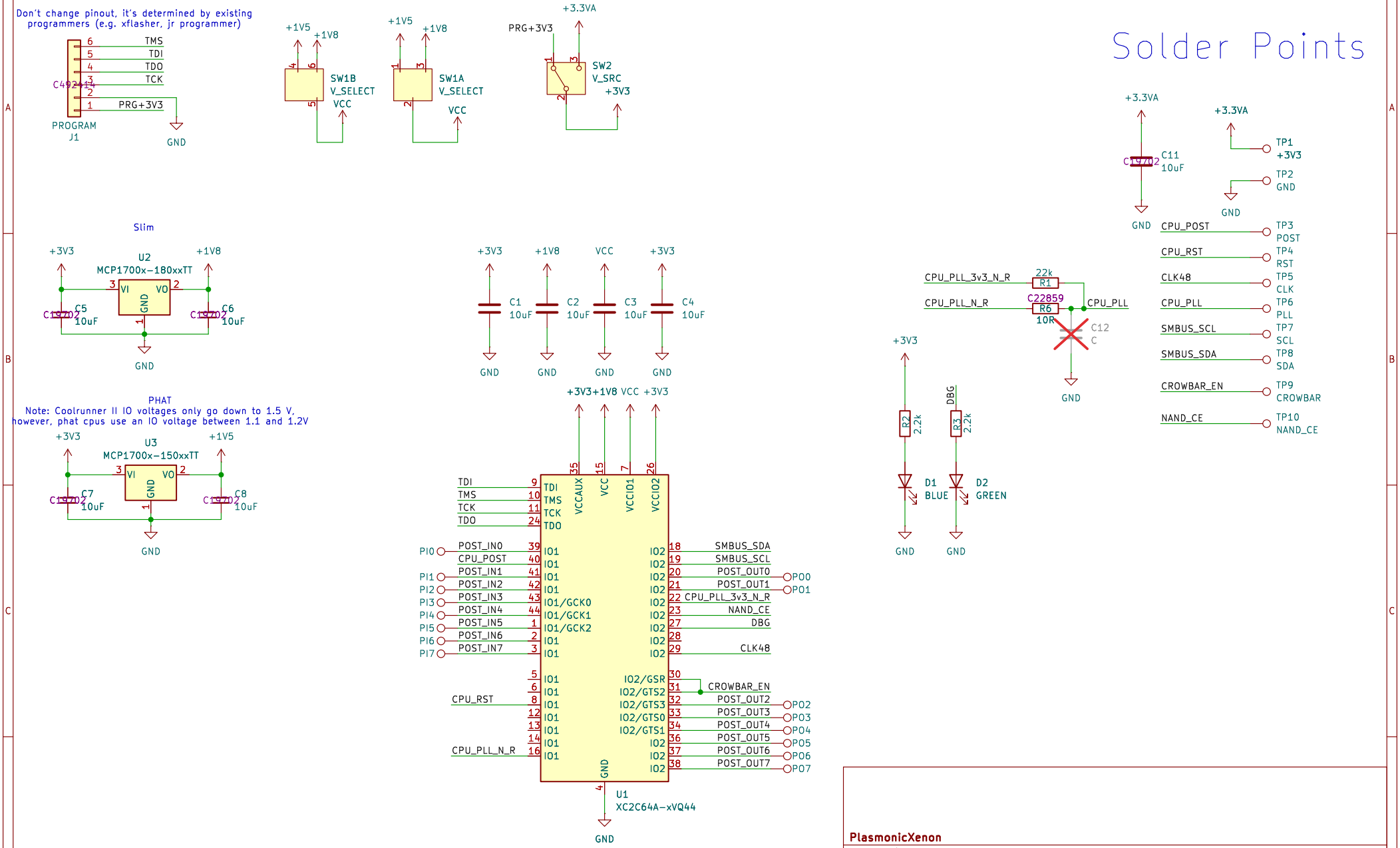
Solder Points
Don't change pinout, it's determined by existing programmers (e.g. xflasher, jr programmer)
PROGRAM
J1
TMS
TDI
TDO
TCK
PRG+3V3
GND
+1V5
+1V8
SW1B
V_SELECT
VCC
SW1A
V_SELECT
+3.3VA
PRG+3V3
SW2
V_SRC
+3V3
C11
10uF
TP1
+3V3
TP2
GND
Slim
U2
MCP1700x-180xxTT
C5
10uF
C6
10uF
C1
10uF
C2
10uF
C3
10uF
C4
10uF
PHAT
Note: Coolrunner II IO voltages only go down to 1.5 V, however, phat cpus use an IO voltage between 1.1 and 1.2V
U3
MCP1700x-150xxTT
C7
10uF
C8
10uF
+3V3+1V8 VCC +3V3
VCCAUX
VCC
VCCIO1
VCCIO2
TDI
TMS
TCK
TDO
POST_IN0
CPU_POST
POST_IN1
POST_IN2
POST_IN3
POST_IN4
POST_IN5
POST_IN6
POST_IN7
CPU_RST
CPU_PLL_N_R
SMBUS_SDA
SMBUS_SCL
POST_OUT0
POST_OUT1
CPU_PLL_3v3_N_R
NAND_CE
DBG
CLK48
CROWBAR_EN
POST_OUT2
POST_OUT3
POST_OUT4
POST_OUT5
POST_OUT6
POST_OUT7
U1
XC2C64A-xVQ44
CPU_PLL_3v3_N_R
22k
R1
CPU_PLL_N_R
C22859
R6
10R
CPU_PLL
C12
C
R2
2.2k
R3
2.2k
D1
BLUE
D2
GREEN
TP3
POST
TP4
RST
TP5
CLK
TP6
PLL
TP7
SCL
TP8
SDA
TP9
CROWBAR
TP10
NAND_CE
PlasmonicXenon
Sheet: /
File: rgh_coolrunner_64.kicad_sch
Title: RGH Coolrunner XC2C64A
Size: A4
Date: 2026-03-04
Rev: 1
KiCad E.D.A. 9.0.8
Id: 1/1