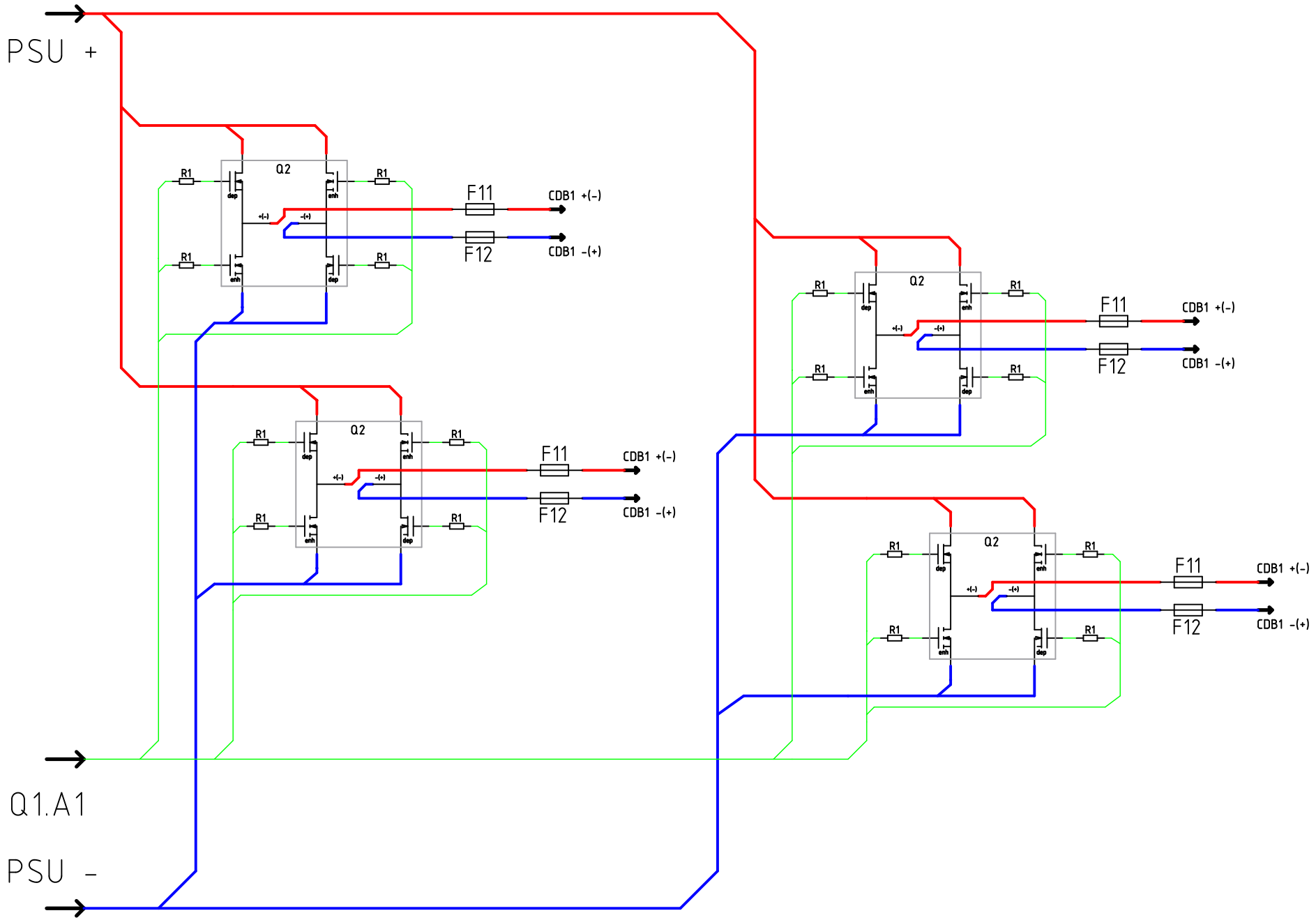

Date:	Ver:	Ext:	By:	Drawing Name:	Drawing Nr:	Updated By:	Original By:
09.02.2021	1.00		Eivind Lundeberg	Supply Selector	1-01C	E.L.	Eivind Lundeberg
11.02.2021	1.01		Eivind Lundeberg				

Q1	Arduino
Q2	N-channel MOSFET H-Bridge
Q3	N-channel MOSFET H-Bridge
Q4	N-channel MOSFET H-Bridge
Q5	N-channel MOSFET H-Bridge
R11	100Ω
R12	100Ω
R13	100Ω
R14	100Ω
R21	100Ω
R22	100Ω
R23	100Ω
R24	100Ω
R31	100Ω
R32	100Ω
R33	100Ω
R34	100Ω
R41	100Ω
R42	100Ω
R43	100Ω
R44	100Ω
F11	XXA Fuse
F12	XXA Fuse
F21	XXA Fuse
F22	XXA Fuse

F31	XXA Fuse
F32	XXA Fuse
F41	XXA Fuse
F42	XXA Fuse
PSU	Power Supply Unit
CDB	Coil Driver Board

Date:	Ver:	Ext:	By:	Drawing Name:	Drawing Nr:	Updated By:	Original By:
09.02.2021	1.00		Eivind Lundeberg	Supply Selector	1-01C	E.L.	Eivind Lundeberg
11.02.2021	1.01		Eivind Lundeberg				