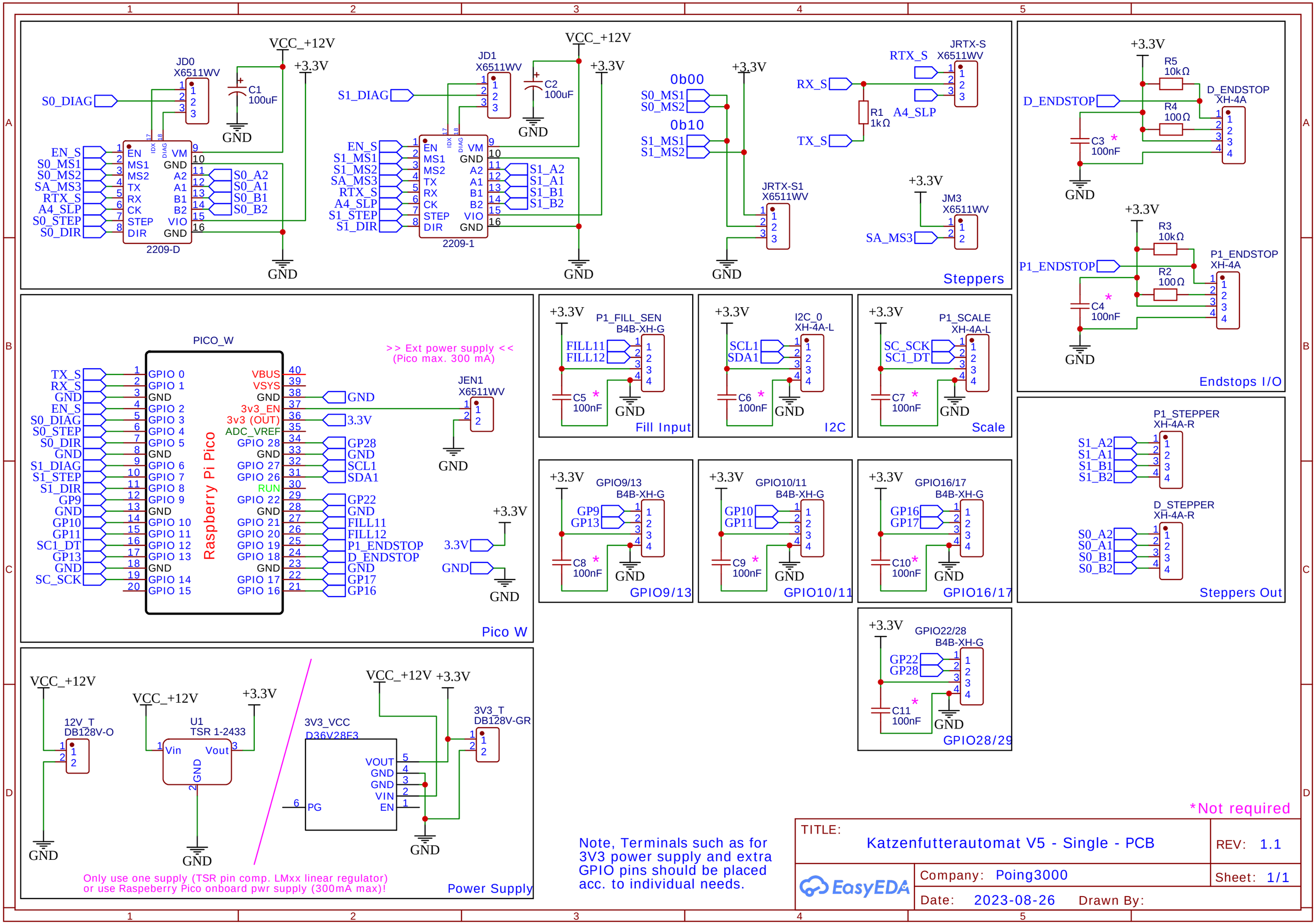
Steppers
JD0 X6511WV
JD1 X6511WV
2209-D
2209-1
VCC_+12V
+3.3V
GND
C1 100uF
C2 100uF
S0_DIAG
S1_DIAG
EN_S
S0_MS1
S0_MS2
SA_MS3
RTX_S
A4_SLP
S1_STEP
S1_DIR
S0_STEP
S0_DIR
S1_MS1
S1_MS2
S0_A2
S0_A1
S0_B1
S0_B2
S1_A2
S1_A1
S1_B1
S1_B2
0b00
0b10
JRTX-S X6511WV
JRTX-S1 X6511WV
JM3 X6511WV
RX_S
TX_S
R1 1kΩ
Endstops I/O
R5 10kΩ
R4 100Ω
R3 10kΩ
R2 100Ω
D_ENDSTOP XH-4A
P1_ENDSTOP XH-4A
C3 100nF
C4 100nF
P1_ENDSTOP
D_ENDSTOP
Steppers Out
P1_STEPPER XH-4A-R
D_STEPPER XH-4A-R
Pico W
PICO_W
Raspberry Pi Pico
>> Ext power supply <<
(Pico max. 300 mA)
JEN1 X6511WV
GPIO 0
GPIO 1
GPIO 2
GPIO 3
GPIO 4
GPIO 5
GPIO 6
GPIO 7
GPIO 8
GPIO 9
GPIO 10
GPIO 11
GPIO 12
GPIO 13
GPIO 14
GPIO 15
VBUS
VSYS
3v3_EN
3v3 (OUT)
ADC_VREF
RUN
GP28
GP22
GP17
GP16
SCL1
SDA1
FILL11
FILL12
P1_ENDSTOP
D_ENDSTOP
Fill Input
P1_FILL_SEN B4B-XH-G
I2C
I2C_0 XH-4A-L
Scale
P1_SCALE XH-4A-L
SC_SCK
SC1_DT
C5 100nF
C6 100nF
C7 100nF
GPIO9/13
GPIO10/11
GPIO16/17
GPIO22/28
B4B-XH-G
C8 100nF
C9 100nF
C10 100nF
C11 100nF
Power Supply
12V_T DB128V-O
U1 TSR 1-2433
Vin
Vout
3V3_VCC D36V28F3
VOUT
VIN
EN
PG
3V3_T DB128V-GR
Only use one supply (TSR pin comp. LMxx linear regulator)
or use Raspeberry Pico onboard pwr supply (300mA max)!
*Not required
Note, Terminals such as for 3V3 power supply and extra GPIO pins should be placed acc. to individual needs.
TITLE:
Katzenfutterautomat V5 - Single - PCB
REV: 1.1
Company: Poing3000
Sheet: 1/1
Date: 2023-08-26
Drawn By:
EasyEDA