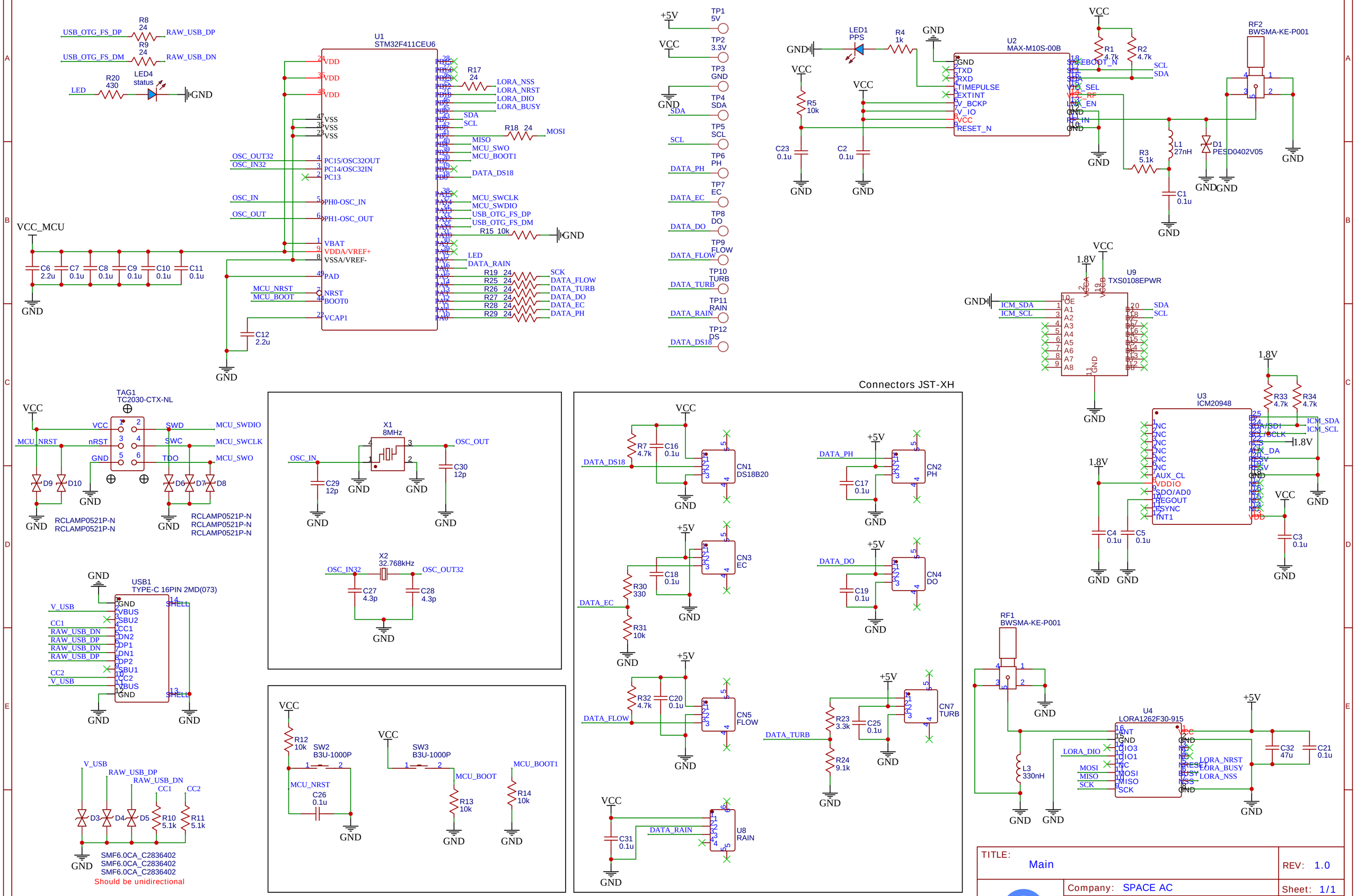
U1
STM32F411CEU6
U2
MAX-M10S-00B
U3
ICM20948
U4
LORA1262F30-915
U9
TXS0108EPWR
U8
RAIN
TAG1
TC2030-CTX-NL
USB1
TYPE-C 16PIN 2MD(073)
RF1
BWSMA-KE-P001
RF2
BWSMA-KE-P001
X1
8MHz
X2
32.768kHz
Connectors JST-XH
CN1
DS18B20
CN2
PH
CN3
EC
CN4
DO
CN5
FLOW
CN7
TURB
SW2
B3U-1000P
SW3
B3U-1000P
LED1
PPS
LED4
status
RCLAMP0521P-N
SMF6.0CA_C2836402
Should be unidirectional
VCC_MCU
USB_OTG_FS_DP
USB_OTG_FS_DM
RAW_USB_DP
RAW_USB_DN
LORA_NSS
LORA_NRST
LORA_DIO
LORA_BUSY
MCU_SWDIO
MCU_SWCLK
MCU_SWO
MCU_NRST
MCU_BOOT
MCU_BOOT1
OSC_OUT32
OSC_IN32
OSC_IN
OSC_OUT
DATA_DS18
DATA_PH
DATA_EC
DATA_DO
DATA_FLOW
DATA_TURB
DATA_RAIN
ICM_SDA
ICM_SCL
TITLE:
Main
REV: 1.0
Company: SPACE AC
Sheet: 1/1
Date: 2025-06-19
Drawn By: trirayan

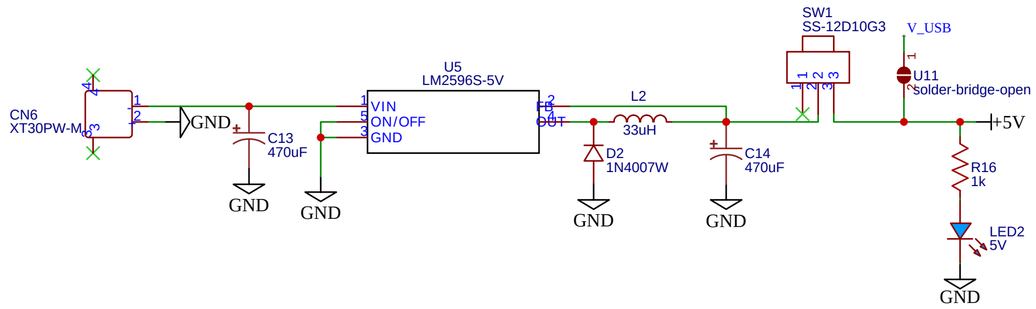

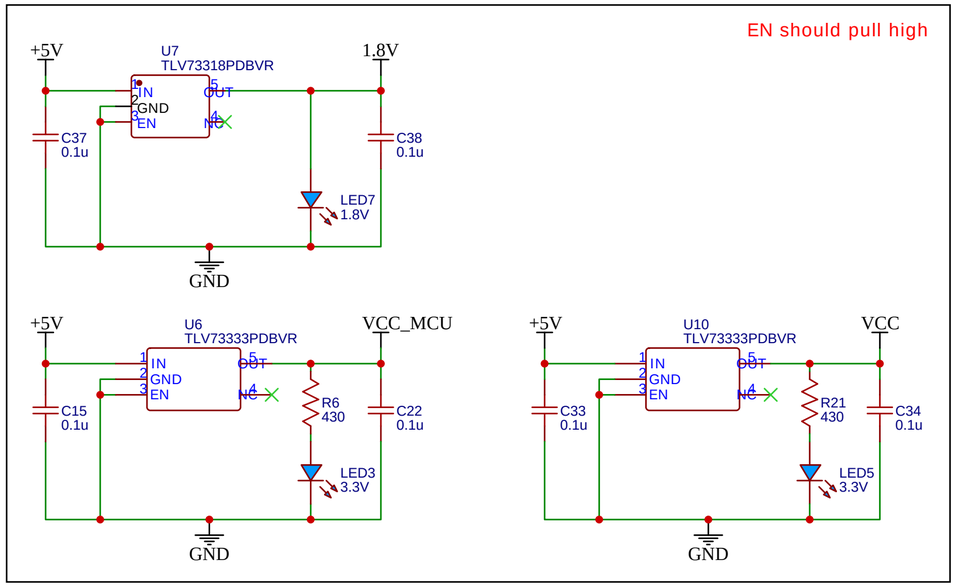

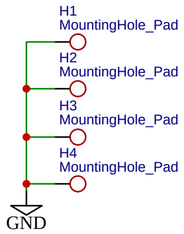

TITLE: Pheripherals	REV: 1.0
Company: SPACE AC	Sheet: 1/1
Date: 2025-06-23 Drawn By: trirayan	