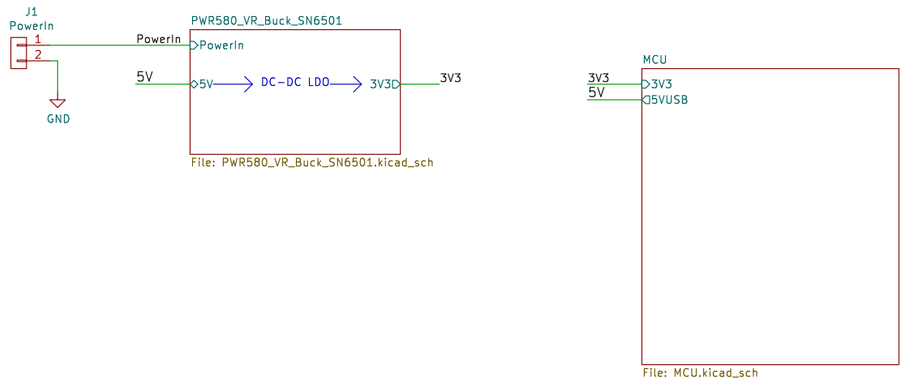

Sheet: /
File: Energy-Reader.kicad_sch

Title:

Size: A3	Date:	Rev:
KiCad E.D.A. kicad 7.0.8-7.0.8~ubuntu22.04.1		Id: 1/3

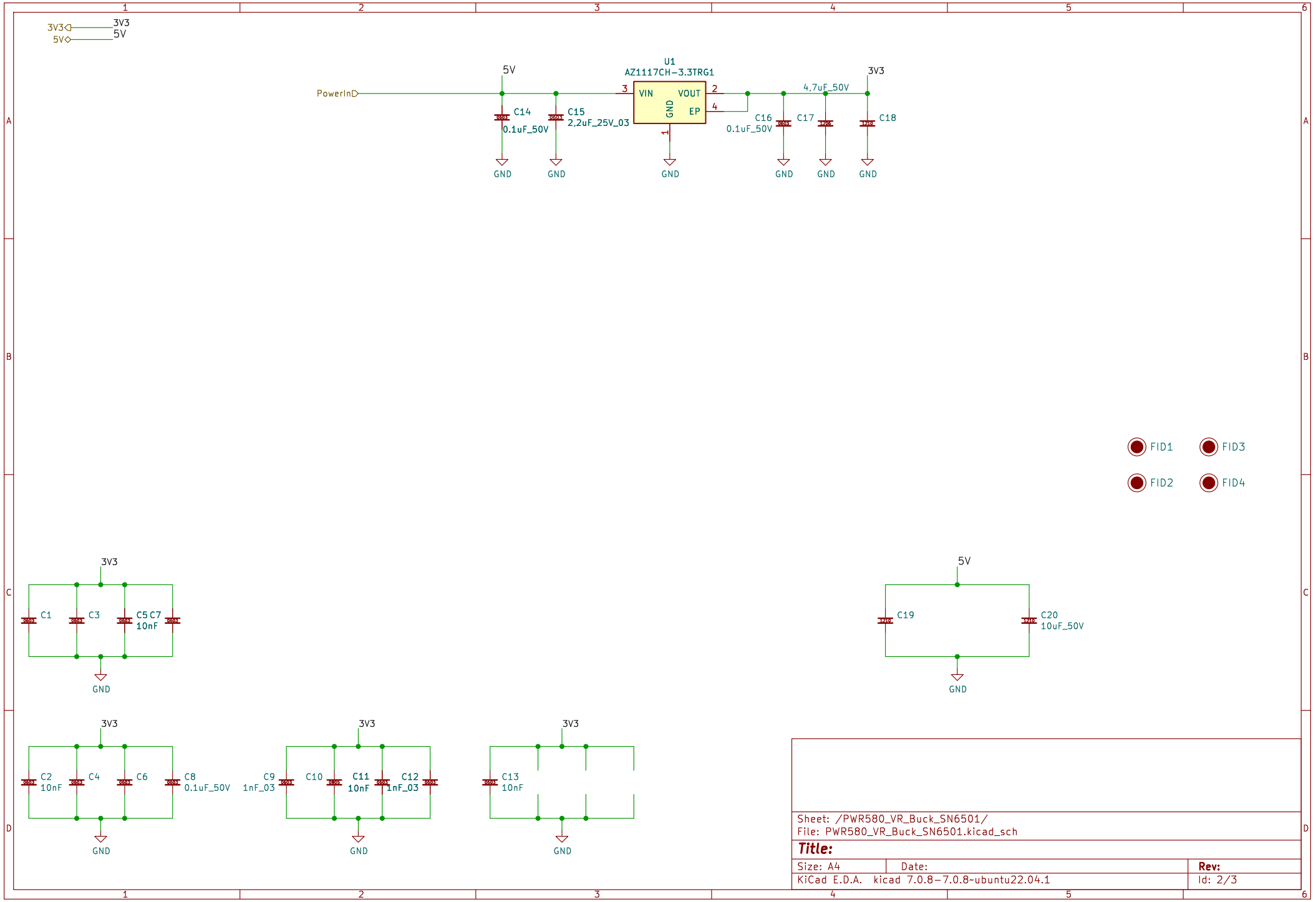

Sheet: /PWR580_VR_Buck_SN6501/
File: PWR580_VR_Buck_SN6501.kicad_sch

Title:

Size: A4	Date:	Rev:
KiCad E.D.A. kicad 7.0.8-7.0.8~ubuntu22.04.1		Id: 2/3

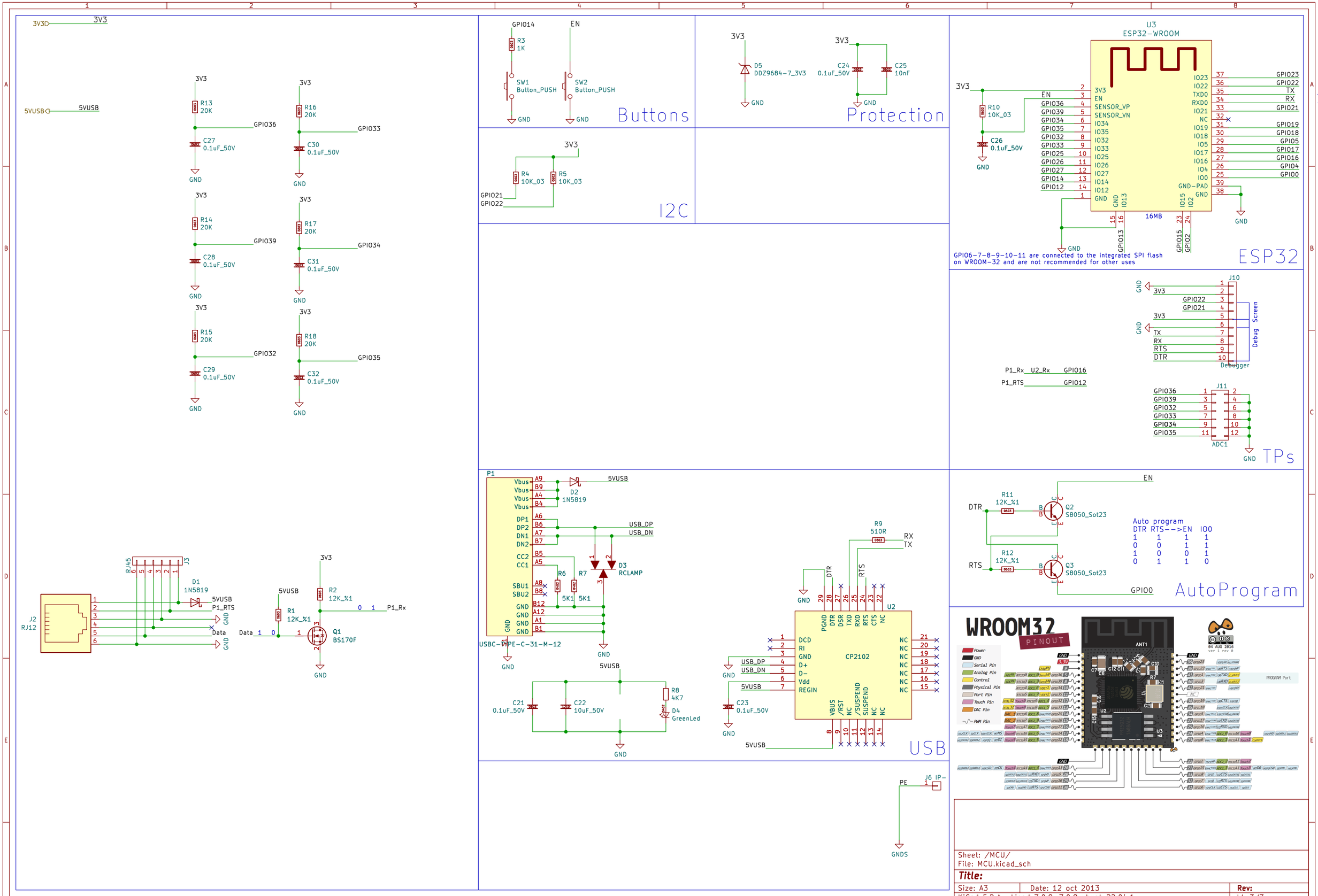

Sheet: /MCU/
File: MCU.kicad_sch

Title:

Size: A3	Date: 12 oct 2013	Rev:
KiCad E.D.A. kicad 7.0.8-7.0.8~ubuntu22.04.1		Id: 3/3