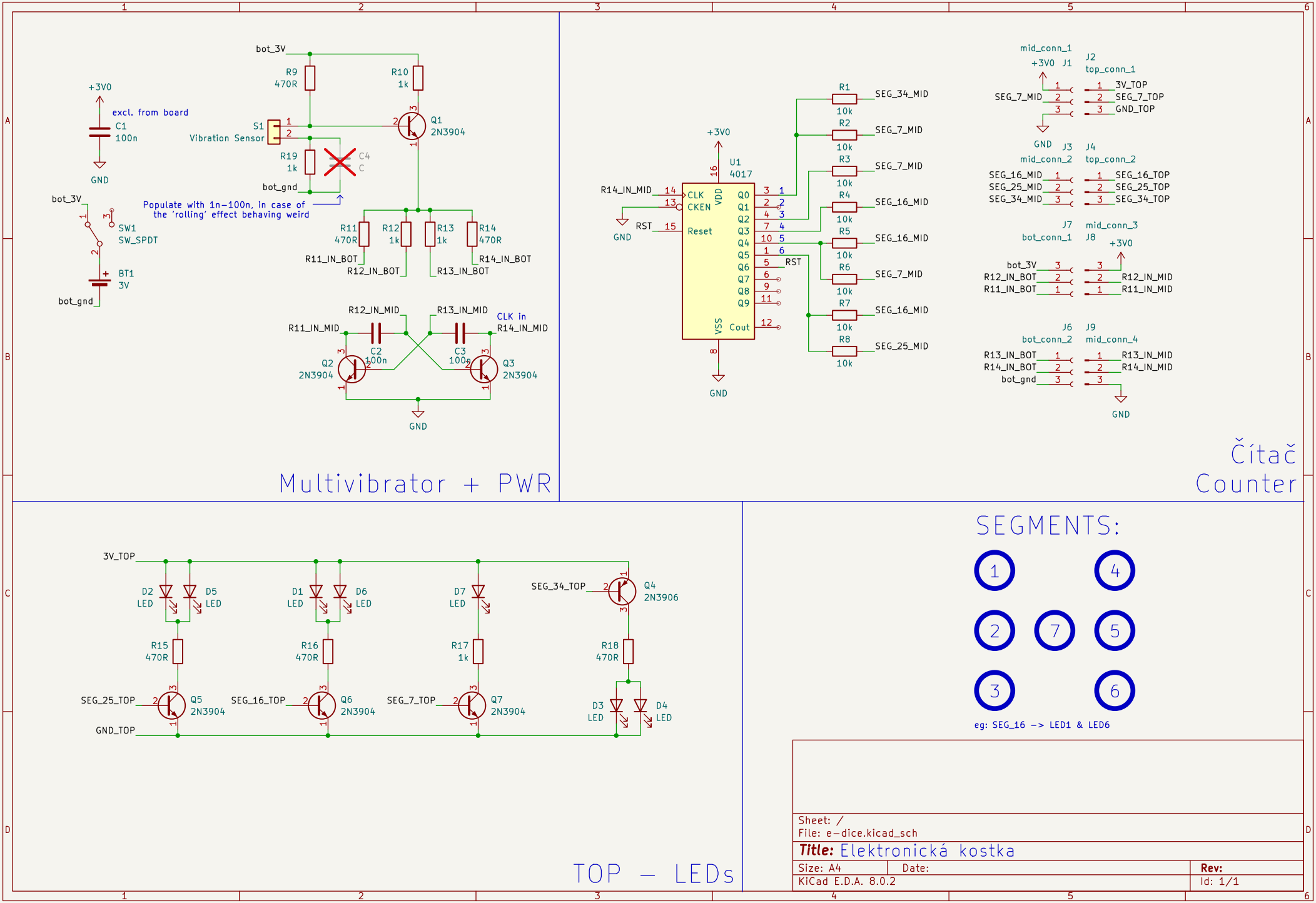
Multivibrator + PWR
+3V0
excl. from board
C1
100n
GND
bot_3V
SW1
SW_SPDT
BT1
3V
bot_gnd
bot_3V
R9
470R
R10
1k
S1
Vibration Sensor
Q1
2N3904
R19
1k
C4
C
bot_gnd
Populate with 1n–100n, in case of the 'rolling' effect behaving weird
R11
470R
R12
1k
R13
1k
R14
470R
R11_IN_BOT
R12_IN_BOT
R13_IN_BOT
R14_IN_BOT
R12_IN_MID
R13_IN_MID
CLK in
R14_IN_MID
R11_IN_MID
C2
100n
C3
100n
Q2
2N3904
Q3
2N3904
GND
Čítač
Counter
+3V0
U1
4017
R14_IN_MID
CLK
CKEN
VDD
Q0
Q1
Q2
Q3
Q4
Q5
Q6
Q7
Q8
Q9
RST
Reset
Cout
VSS
GND
R1
R2
R3
R4
R5
R6
R7
R8
10k
SEG_34_MID
SEG_7_MID
SEG_7_MID
SEG_16_MID
SEG_16_MID
SEG_7_MID
SEG_16_MID
SEG_25_MID
mid_conn_1
+3V0
J1
J2
top_conn_1
SEG_7_MID
3V_TOP
SEG_7_TOP
GND_TOP
GND
J3
J4
mid_conn_2
top_conn_2
SEG_16_MID
SEG_25_MID
SEG_34_MID
SEG_16_TOP
SEG_25_TOP
SEG_34_TOP
J7
mid_conn_3
bot_conn_1
J8
+3V0
bot_3V
R12_IN_BOT
R11_IN_BOT
R12_IN_MID
R11_IN_MID
J6
J9
bot_conn_2
mid_conn_4
R13_IN_BOT
R14_IN_BOT
bot_gnd
R13_IN_MID
R14_IN_MID
GND
TOP – LEDs
3V_TOP
D2
LED
D5
LED
D1
LED
D6
LED
D7
LED
SEG_34_TOP
Q4
2N3906
R15
470R
R16
470R
R17
1k
R18
470R
SEG_25_TOP
Q5
2N3904
SEG_16_TOP
Q6
2N3904
SEG_7_TOP
Q7
2N3904
D3
LED
D4
LED
GND_TOP
SEGMENTS:
1
4
2
7
5
3
6
eg: SEG_16 –> LED1 & LED6
Sheet: /
File: e–dice.kicad_sch
Title: Elektronická kostka
Size: A4
Date:
Rev:
KiCad E.D.A. 8.0.2
Id: 1/1