Spec:

Interfaces:
Ideally DMX512 (5pin XLR) and Art-Net (RJ45)
At least one, slight DMX512 preference
+12V DC input
weatherproof connections
10x 6.4V 0.3A LED strips

Control:
Treat as 10x lights per beacon
be able to set normal brightness for each 'light'
but fast enough for strobe effect for each 'light'

Misc:
JLC Assembly
Target quantity is 15

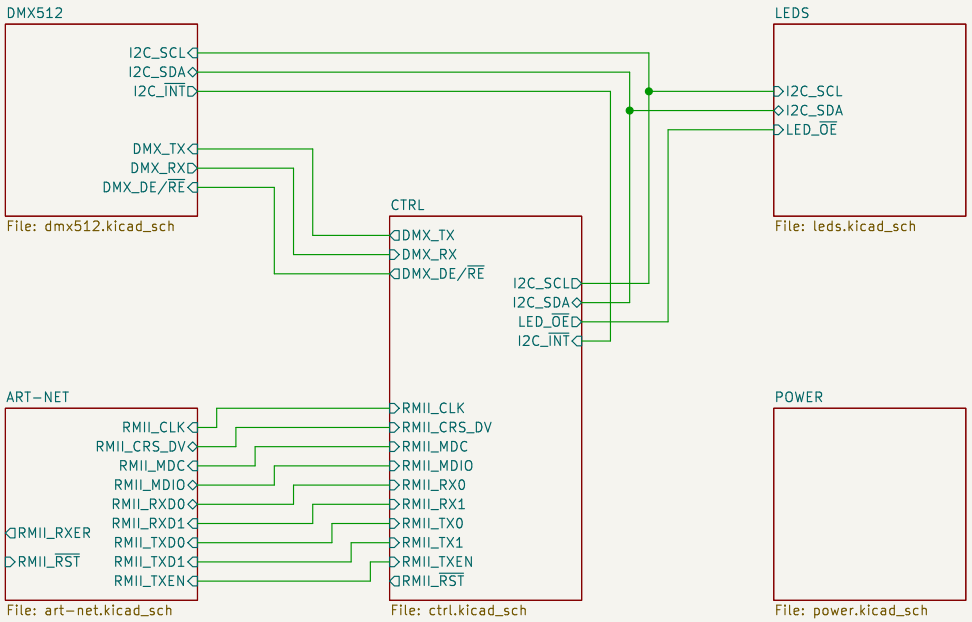

DMX512's XLRs and
Art-Net's RJ45 may
get spun out to
external PCBs

Wires & Bits

Sheet: /
File: emf_beacon.kicad_sch

Title:

Size: A4	Date: 2026-04-10	**Rev: 0**
KiCad E.D.A. 9.0.8		Id: 1/6

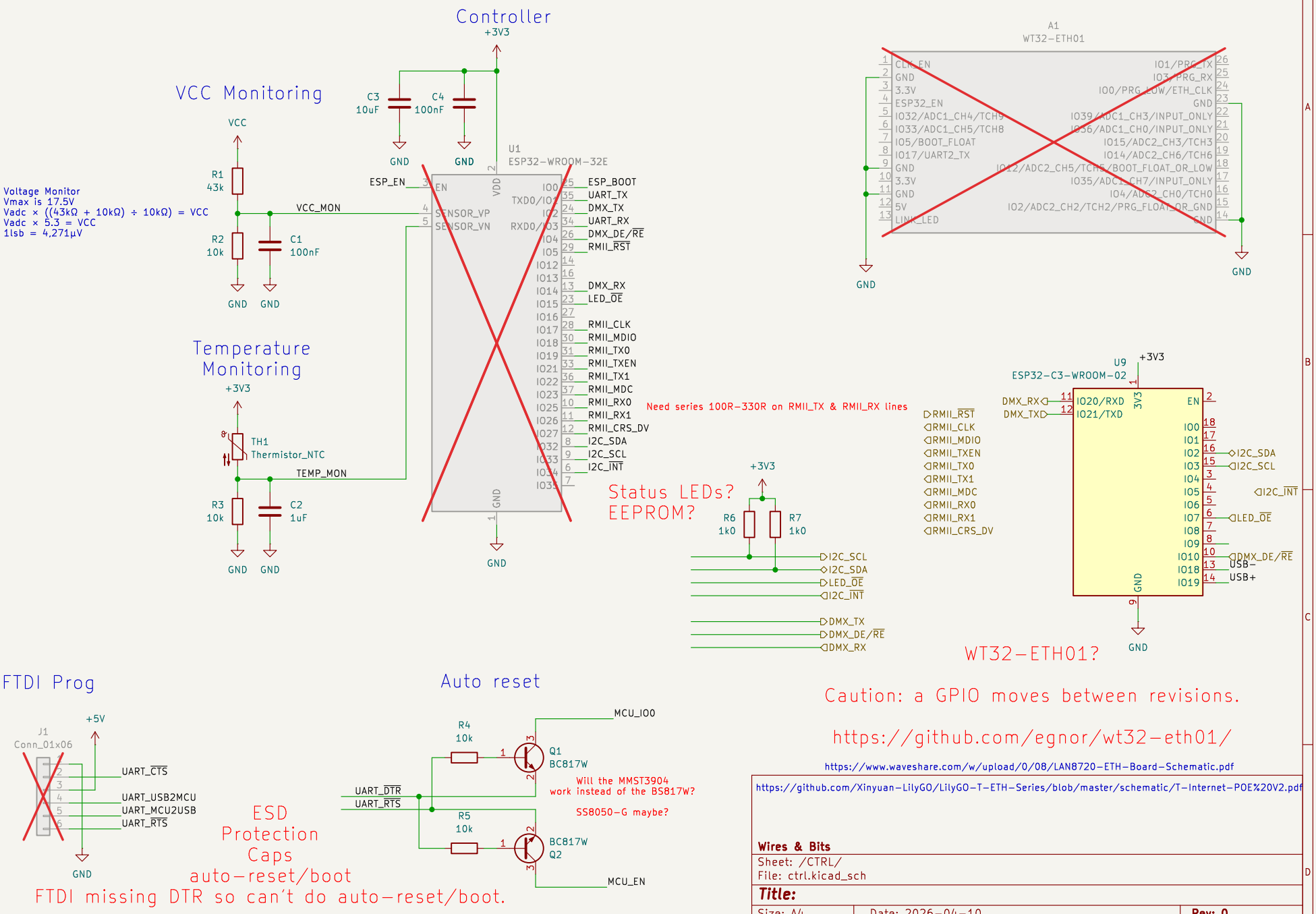

Wires & Bits

Sheet: /CTRL/
File: ctrl.kicad_sch

Title:

Size: A4	Date: 2026-04-10	**Rev: 0**
KiCad E.D.A. 9.0.8		Id: 2/6

Art-Net

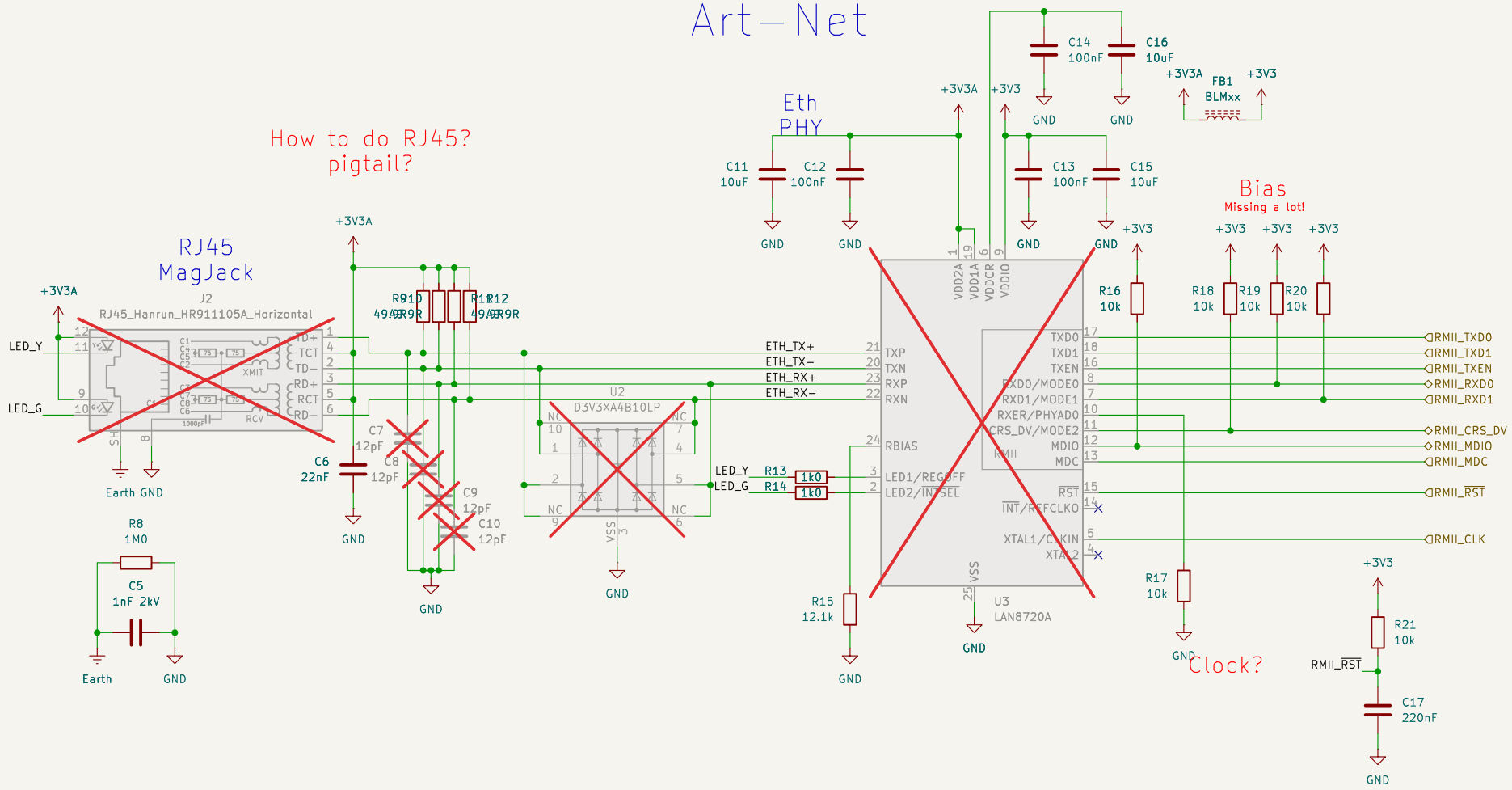

WT32-ETH01?

Caution: a GPIO moves between revisions.

https://github.com/egnor/wt32-eth01/

https://www.waveshare.com/w/upload/0/08/LAN8720-ETH-Board-Schematic.pdf

https://github.com/Xinyuan-LilyGO/LilyGO-T-ETH-Series/blob/master/schematic/T-Internet-POE%20V2.pdf

Wires & Bits

Sheet: /ART-NET/
File: art-net.kicad_sch

Title:

Size: A4	Date: 2026-04-10	**Rev: 0**
KiCad E.D.A. 9.0.8		Id: 3/6

DMX512

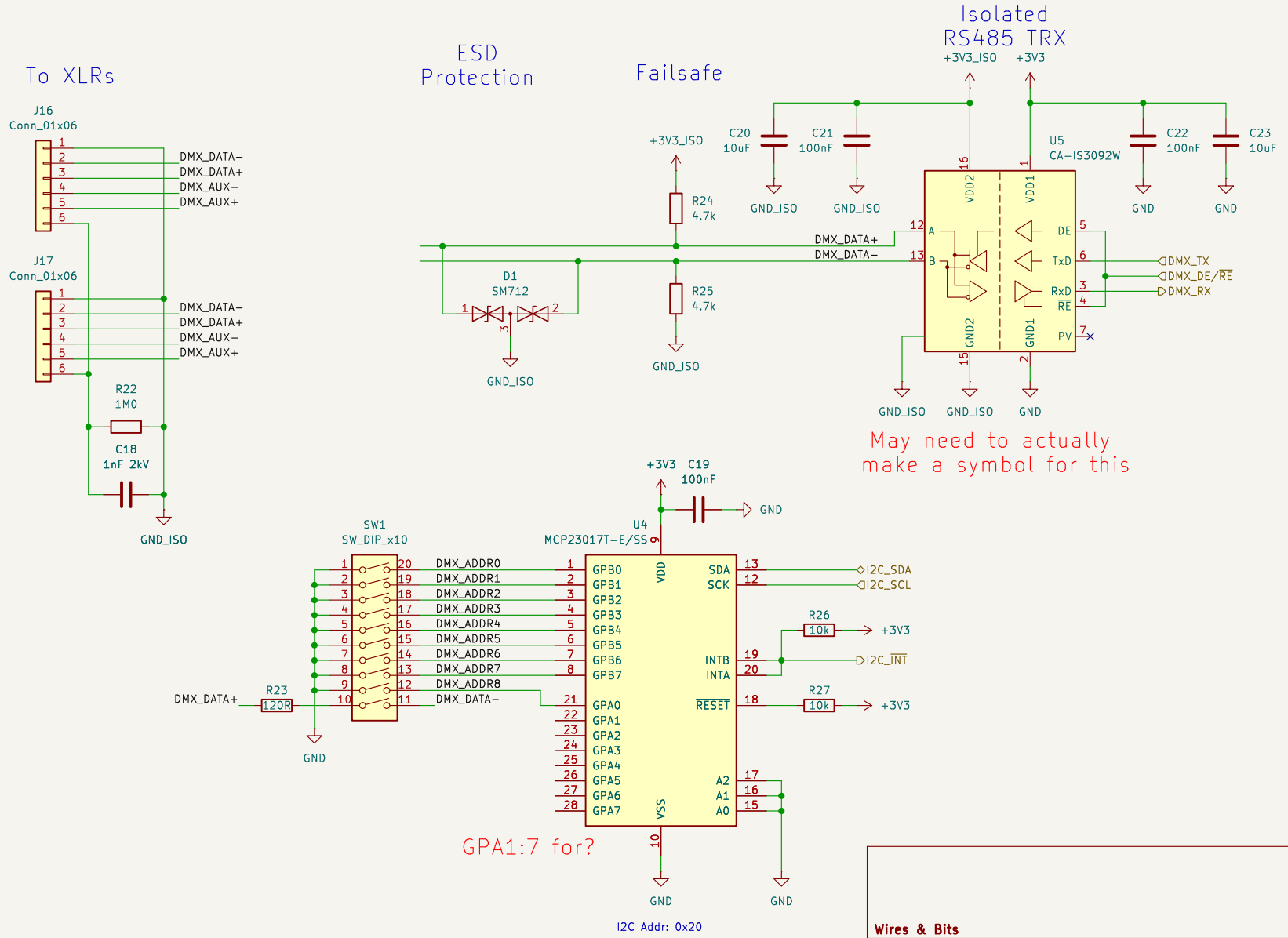

https://dfimg.dfrobot.com/wiki/23269/DFR0944_esp32−s3−based−dmx512−smart−lighting−controller_schematics_V1.0.pdf

https://www.ti.com/lit/an/slla272d/slla272d.pdf

Wires & Bits

Sheet: /DMX512/
File: dmx512.kicad_sch

Title:

Size: A4	Date: 2026−04−10	**Rev: 0**
KiCad E.D.A. 9.0.8		Id: 4/6

LED Driver

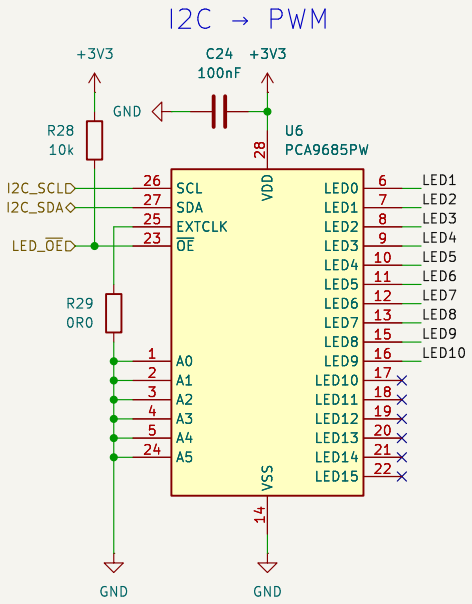

I2C Addr: 0x40

A string of 6x LEDs is 6.4Vf @ 0.3A

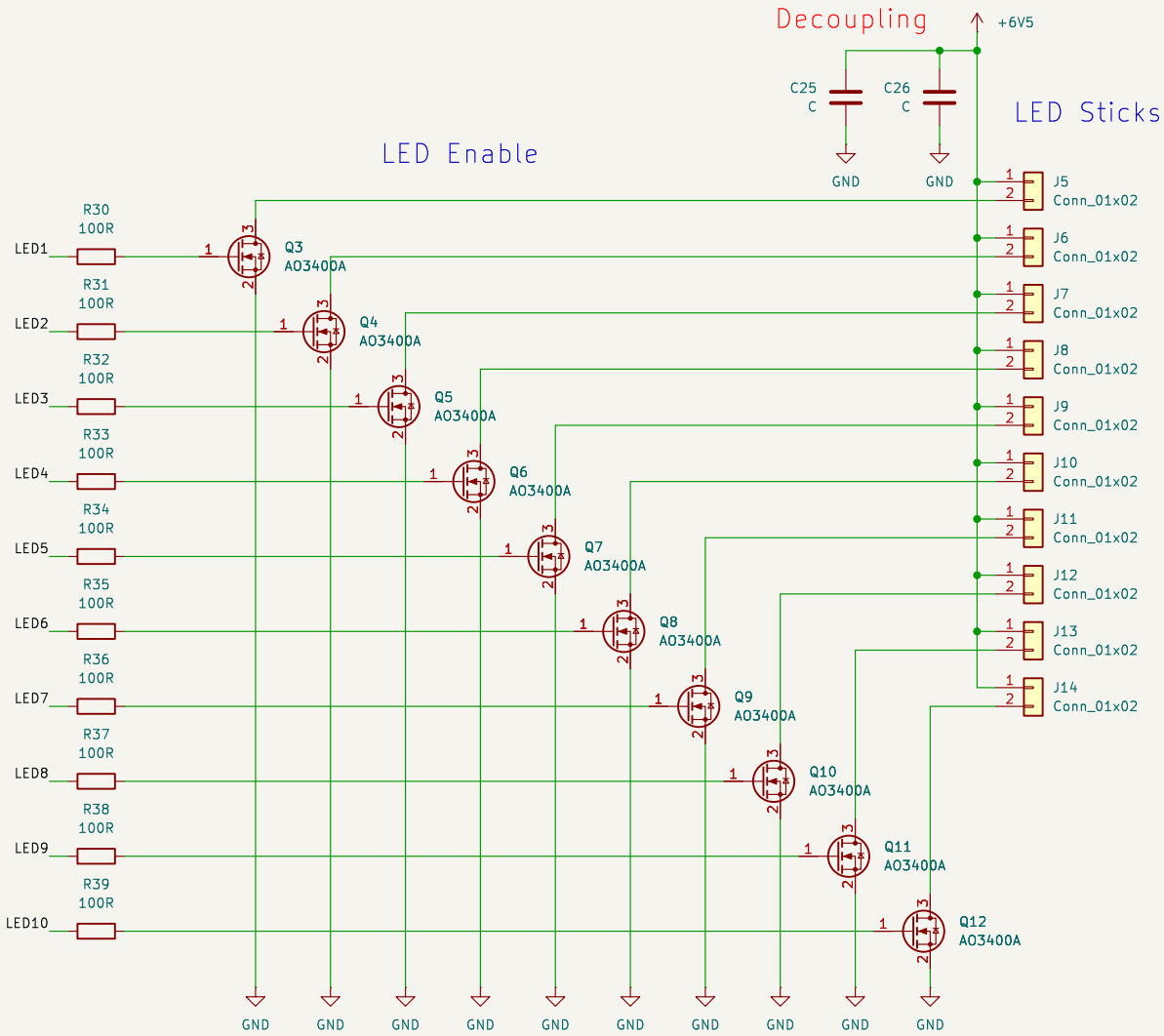

Wires & Bits

Sheet: /LEDS/
File: leds.kicad_sch

Title:

Size: A4	Date: 2026-04-10	**Rev: 0**
KiCad E.D.A. 9.0.8		Id: 5/6

Filtering
Over Voltage
Reverse Voltage

Make input PMOS larger and include soft start
Include large bulk cap for LEDs

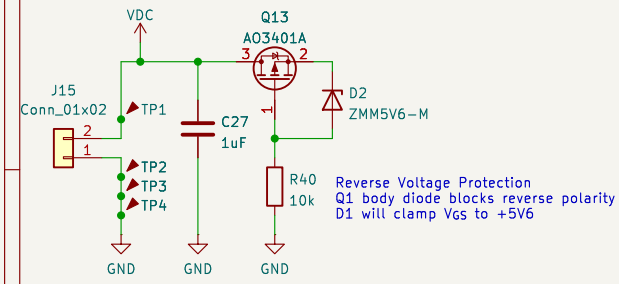

+12V to +6V5 SMPS

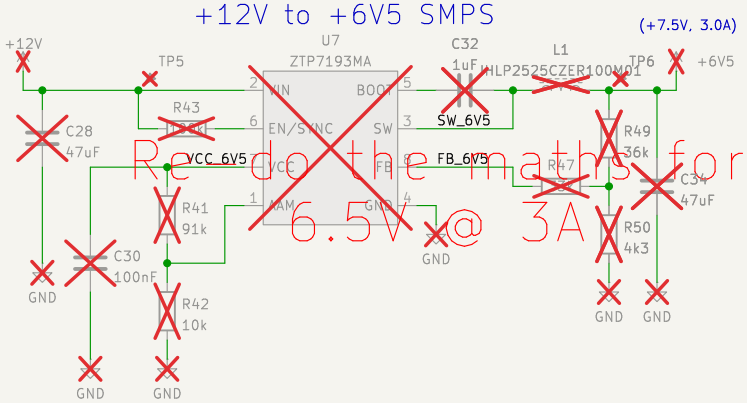

+12V to +3V3 SMPS

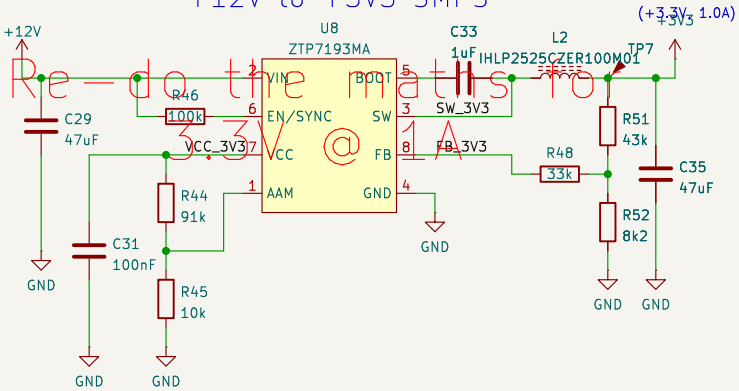

Combined Power LED

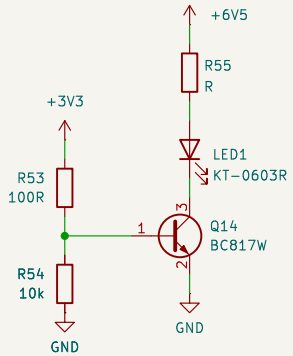

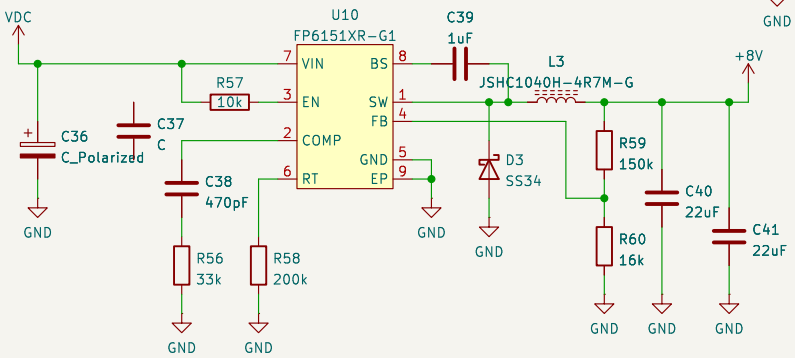

Wires & Bits

Sheet: /POWER/
File: power.kicad_sch

Title:

Size: A4	Date: 2026-04-10	**Rev: 0**
KiCad E.D.A. 9.0.8		Id: 6/6