Spec:

Interfaces:
Ideally DMX512 (5pin XLR) and Art-Net (RJ45)
At least one, slight DMX512 preference
+12V DC input
weatherproof connections
10x 6.4V 0.3A LED strips

Control:
Treat as 10x lights per beacon
be able to set normal brightness for each 'light'
but fast enough for strobe effect for each 'light'

Misc:
JLC Assembly
Target quantity is 15

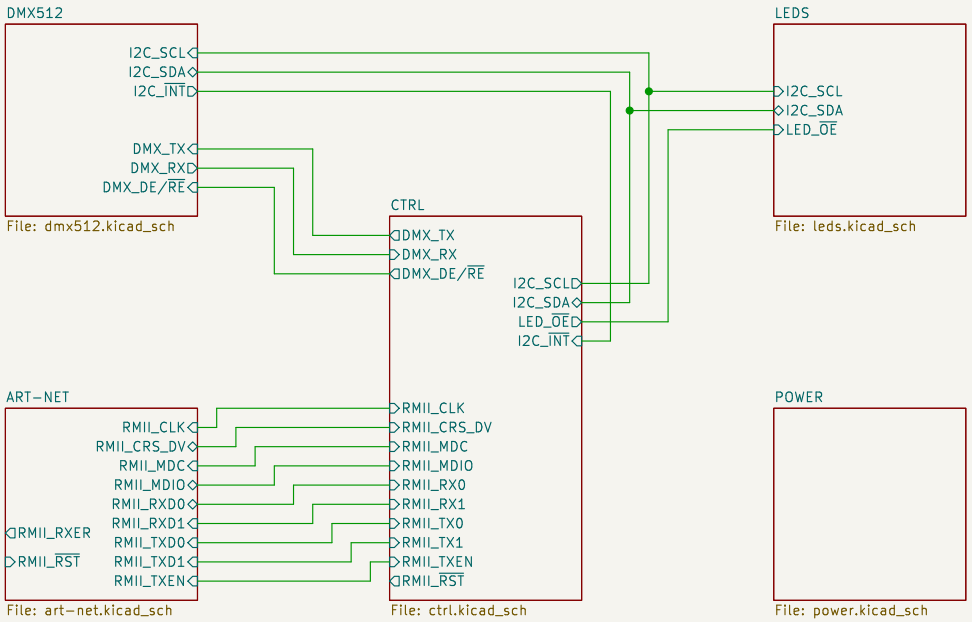

DMX512's XLRs and
Art-Net's RJ45 may
get spun out to
external PCBs

Wires & Bits

Sheet: /
File: emf_beacon.kicad_sch

Title:

Size: A4	Date: 2026-04-10	**Rev: 0**
KiCad E.D.A. 9.0.8		Id: 1/6

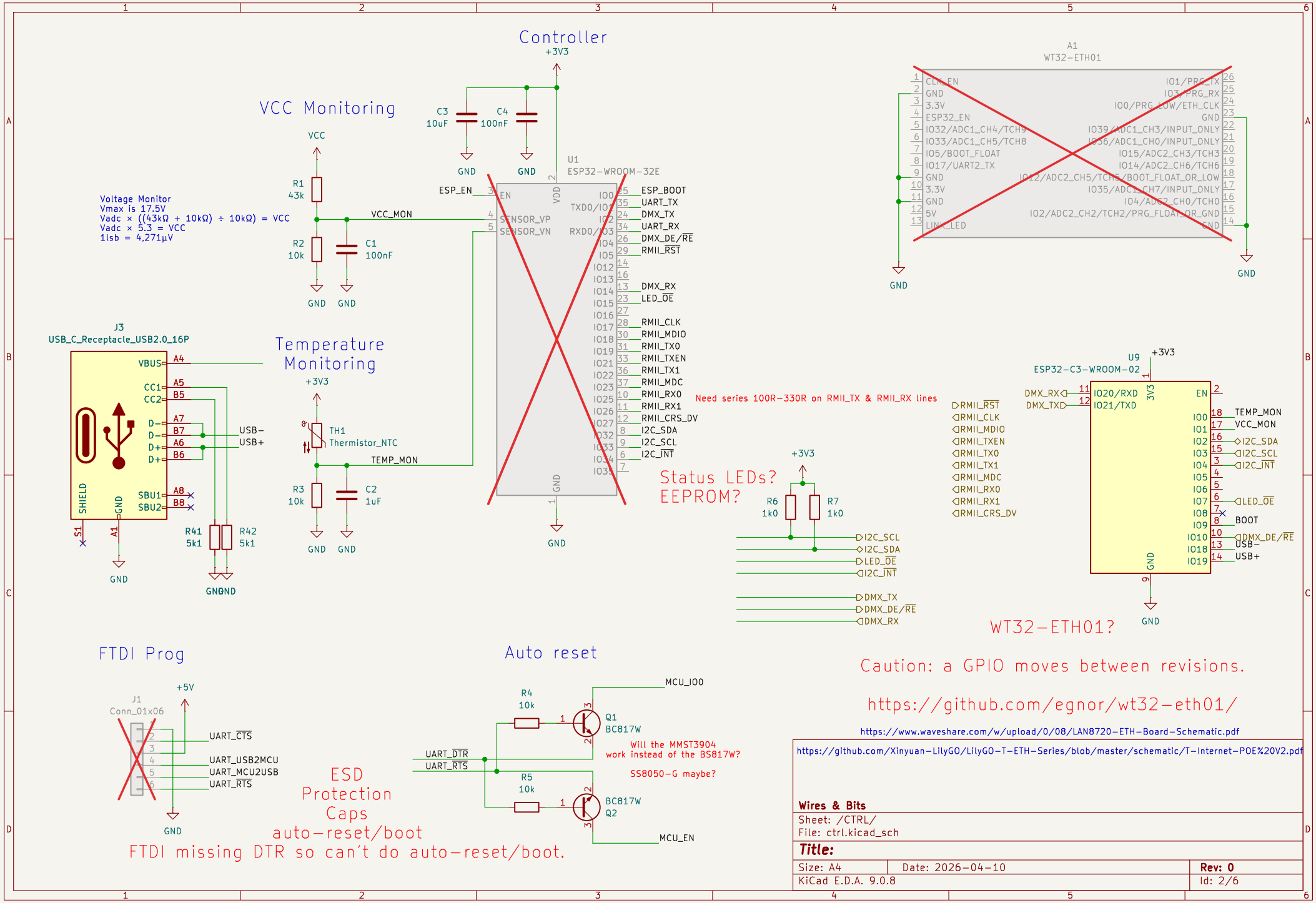
Controller
+3V3
C3
10uF
C4
100nF
GND
GND
U1
ESP32-WROOM-32E
ESP_EN
EN
VDD
SENSOR_VP
SENSOR_VN
IO0
TXD0/IO1
IO2
RXD0/IO3
IO4
IO5
IO12
IO13
IO14
IO15
IO16
IO17
IO18
IO19
IO21
IO22
IO23
IO25
IO26
IO27
IO32
IO33
IO34
IO35
ESP_BOOT
UART_TX
DMX_TX
UART_RX
DMX_DE/RE
RMII_RST
DMX_RX
LED_OE
RMII_CLK
RMII_MDIO
RMII_TX0
RMII_TXEN
RMII_TX1
RMII_MDC
RMII_RX0
RMII_RX1
RMII_CRS_DV
I2C_SDA
I2C_SCL
I2C_INT
GND
Need series 100R-330R on RMII_TX & RMII_RX lines
VCC Monitoring
VCC
R1
43k
R2
10k
C1
100nF
VCC_MON
GND
GND
Voltage Monitor
Vmax is 17.5V
Vadc × ((43kΩ + 10kΩ) ÷ 10kΩ) = VCC
Vadc × 5.3 = VCC
1lsb = 4,271µV
A1
WT32-ETH01
CLK_EN
GND
3.3V
ESP32_EN
IO32/ADC1_CH4/TCH9
IO33/ADC1_CH5/TCH8
IO5/BOOT_FLOAT
IO17/UART2_TX
GND
3.3V
GND
5V
LINK_LED
IO1/PRG_TX
IO3/PRG_RX
IO0/PRG_LOW/ETH_CLK
GND
IO39/ADC1_CH3/INPUT_ONLY
IO36/ADC1_CH0/INPUT_ONLY
IO15/ADC2_CH3/TCH3
IO14/ADC2_CH6/TCH6
IO12/ADC2_CH5/TCH5/BOOT_FLOAT_OR_LOW
IO35/ADC1_CH7/INPUT_ONLY
IO4/ADC2_CH0/TCH0
IO2/ADC2_CH2/TCH2/PRG_FLOAT_OR_GND
GND
GND
GND
J3
USB_C_Receptacle_USB2.0_16P
VBUS
CC1
CC2
D-
D-
D+
D+
SHIELD
GND
SBU1
SBU2
A4
A5
B5
A7
B7
A6
B6
A8
B8
USB-
USB+
S1
A1
R41
5k1
R42
5k1
GND
GNDND
Temperature Monitoring
+3V3
TH1
Thermistor_NTC
TEMP_MON
R3
10k
C2
1uF
GND
GND
Status LEDs?
EEPROM?
+3V3
R6
1k0
R7
1k0
I2C_SCL
I2C_SDA
LED_OE
I2C_INT
DMX_TX
DMX_DE/RE
DMX_RX
U9
ESP32-C3-WROOM-02
+3V3
DMX_RX
DMX_TX
IO20/RXD
IO21/TXD
3V3
EN
IO0
IO1
IO2
IO3
IO4
IO5
IO6
IO7
IO8
IO9
IO10
IO18
IO19
GND
RMII_RST
RMII_CLK
RMII_MDIO
RMII_TXEN
RMII_TX0
RMII_TX1
RMII_MDC
RMII_RX0
RMII_RX1
RMII_CRS_DV
TEMP_MON
VCC_MON
I2C_SDA
I2C_SCL
I2C_INT
LED_OE
BOOT
DMX_DE/RE
USB-
USB+
GND
WT32-ETH01?
Caution: a GPIO moves between revisions.
https://github.com/egnor/wt32-eth01/
https://www.waveshare.com/w/upload/0/08/LAN8720-ETH-Board-Schematic.pdf
https://github.com/Xinyuan-LilyGO/LilyGO-T-ETH-Series/blob/master/schematic/T-Internet-POE%20V2.pdf
FTDI Prog
J1
Conn_01x06
+5V
UART_CTS
UART_USB2MCU
UART_MCU2USB
UART_RTS
GND
ESD
Protection
Caps
auto-reset/boot
FTDI missing DTR so can't do auto-reset/boot.
Auto reset
R4
10k
R5
10k
UART_DTR
UART_RTS
Q1
BC817W
Q2
BC817W
MCU_IO0
MCU_EN
Will the MMST3904
work instead of the BS817W?
SS8050-G maybe?
Wires & Bits
Sheet: /CTRL/
File: ctrl.kicad_sch
Title:
Size: A4
Date: 2026-04-10
Rev: 0
KiCad E.D.A. 9.0.8
Id: 2/6

Art-Net

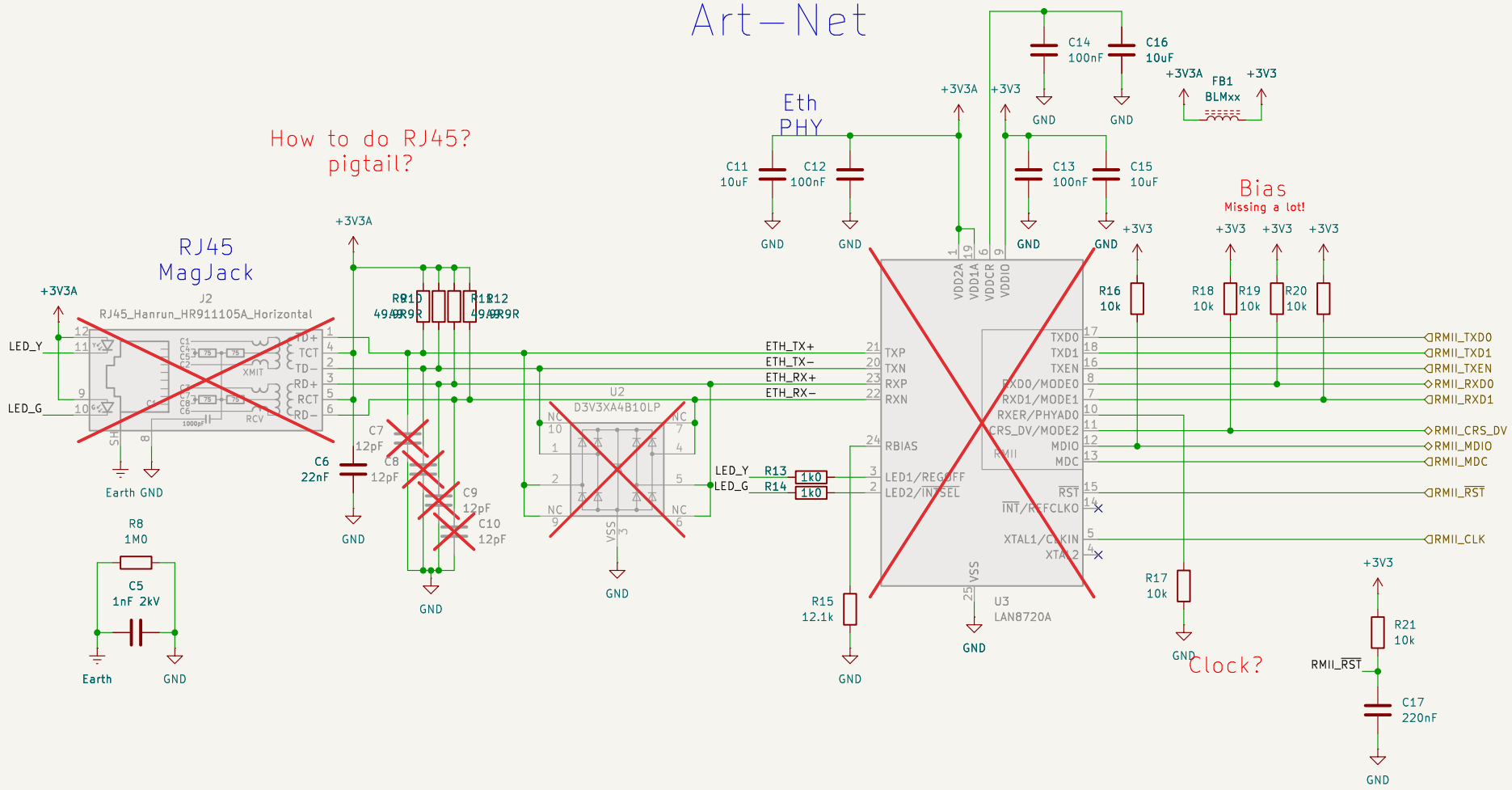

WT32-ETH01?

Caution: a GPIO moves between revisions.

https://github.com/egnor/wt32-eth01/

https://www.waveshare.com/w/upload/0/08/LAN8720-ETH-Board-Schematic.pdf

https://github.com/Xinyuan-LilyGO/LilyGO-T-ETH-Series/blob/master/schematic/T-Internet-POE%20V2.pdf

Wires & Bits

Sheet: /ART-NET/
File: art-net.kicad_sch

Title:

Size: A4	Date: 2026-04-10	**Rev: 0**
KiCad E.D.A. 9.0.8		Id: 3/6

DMX512

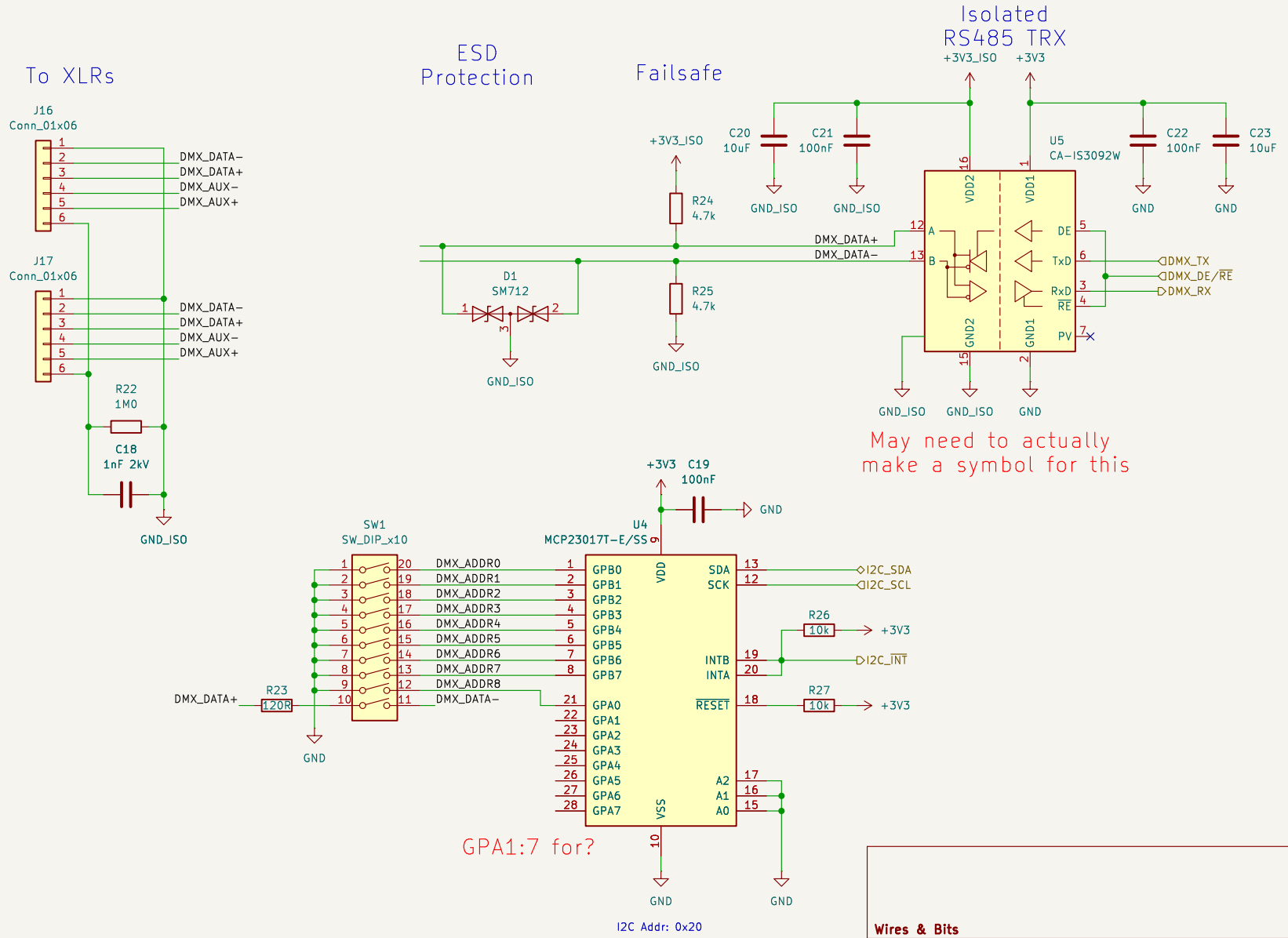

https://dfimg.dfrobot.com/wiki/23269/DFR0944_esp32−s3−based−dmx512−smart−lighting−controller_schematics_V1.0.pdf

https://www.ti.com/lit/an/slla272d/slla272d.pdf

Wires & Bits

Sheet: /DMX512/
File: dmx512.kicad_sch

Title:

Size: A4	Date: 2026−04−10	**Rev: 0**
KiCad E.D.A. 9.0.8		Id: 4/6

LED Driver

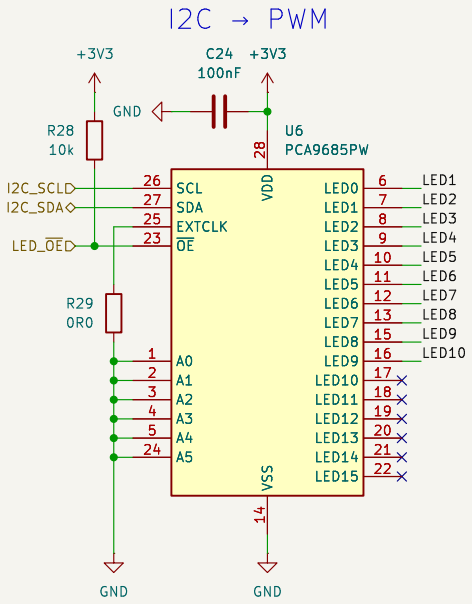

I2C Addr: 0x40

A string of 6x LEDs is 6.4Vf @ 0.3A

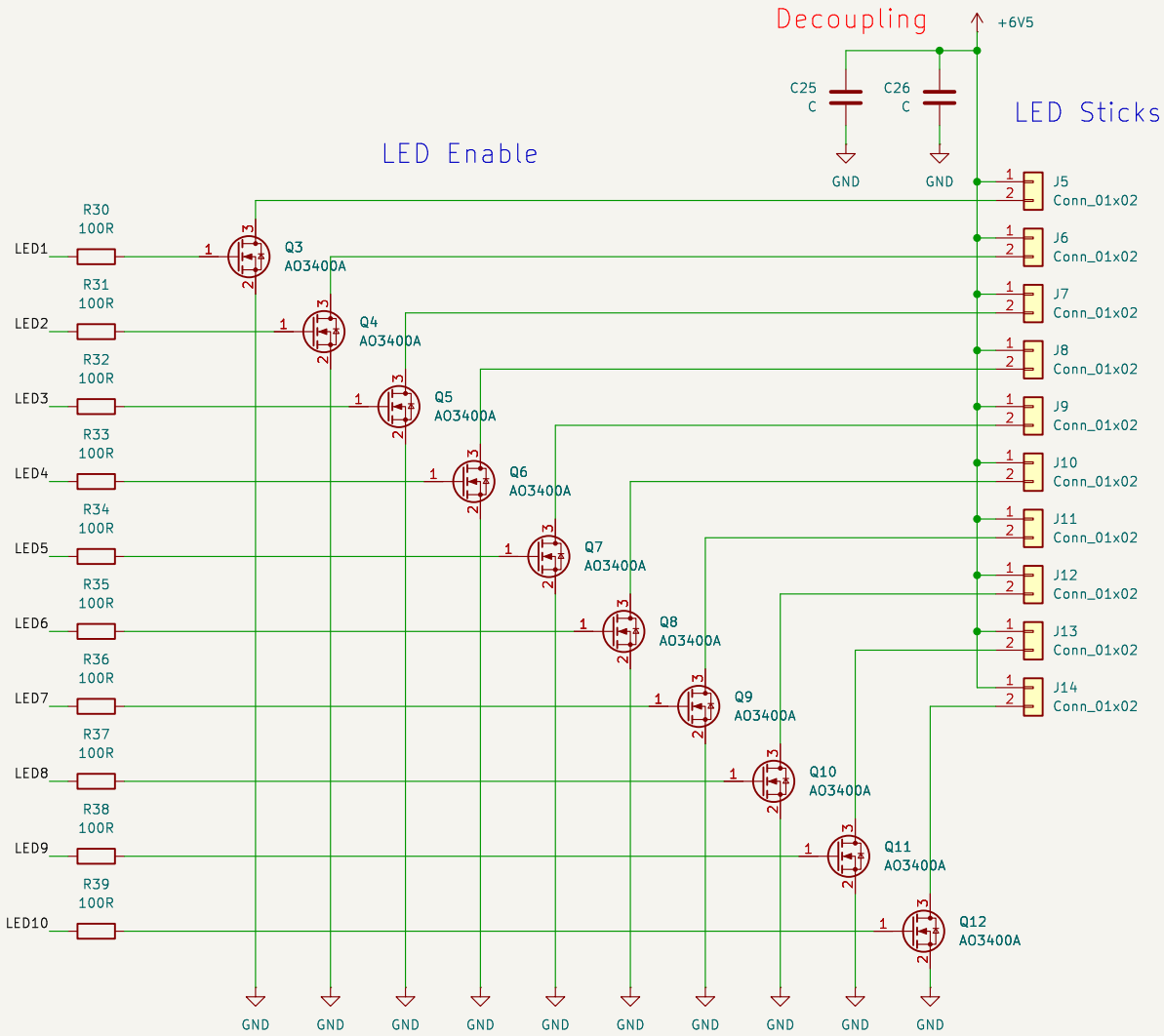

Snubbers?
10R 0402 & 10nF 0402 across Vds

Wires & Bits

Sheet: /LEDS/
File: leds.kicad_sch

Title:

Size: A4	Date: 2026-04-10	**Rev: 0**
KiCad E.D.A. 9.0.8		Id: 5/6

Filtering
Over Voltage
Reverse Voltage

Make input PMOS larger and include soft start
Include large bulk cap for LEDs

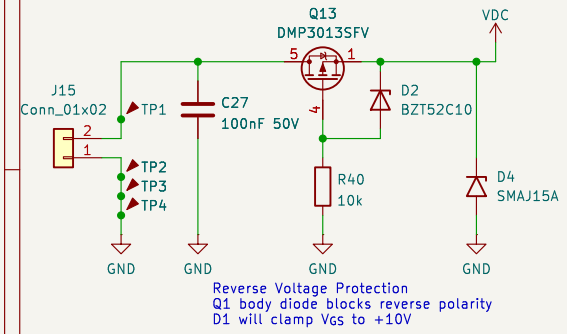

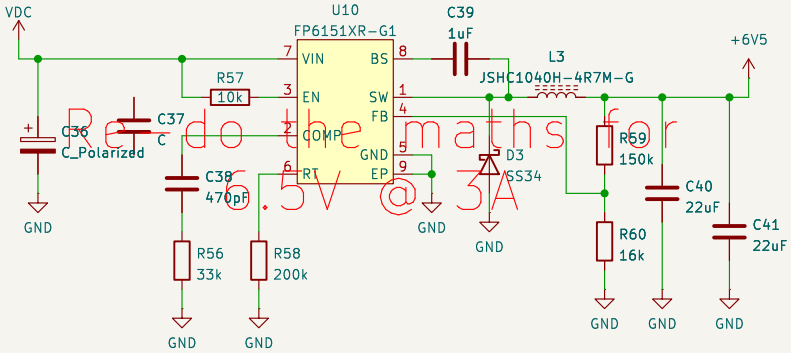

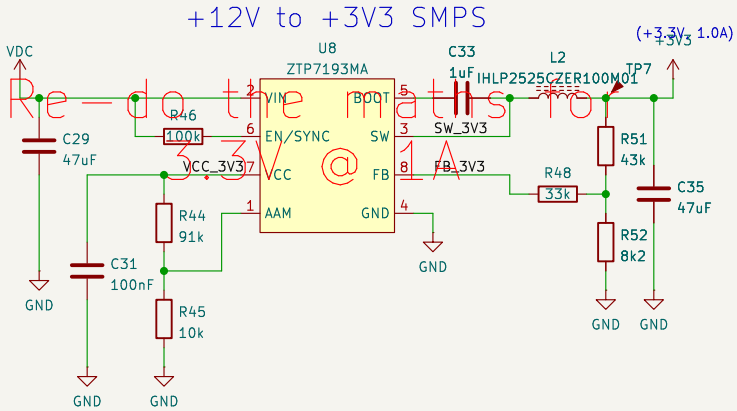

Combined
Power LED

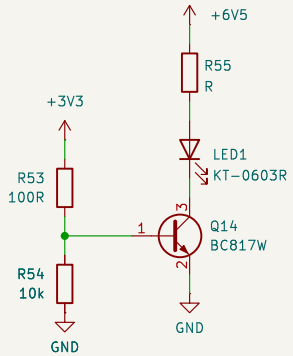

Wires & Bits

Sheet: /POWER/
File: power.kicad_sch

Title:

Size: A4	Date: 2026-04-10	**Rev: 0**
KiCad E.D.A. 9.0.8		Id: 6/6