LED Beacon

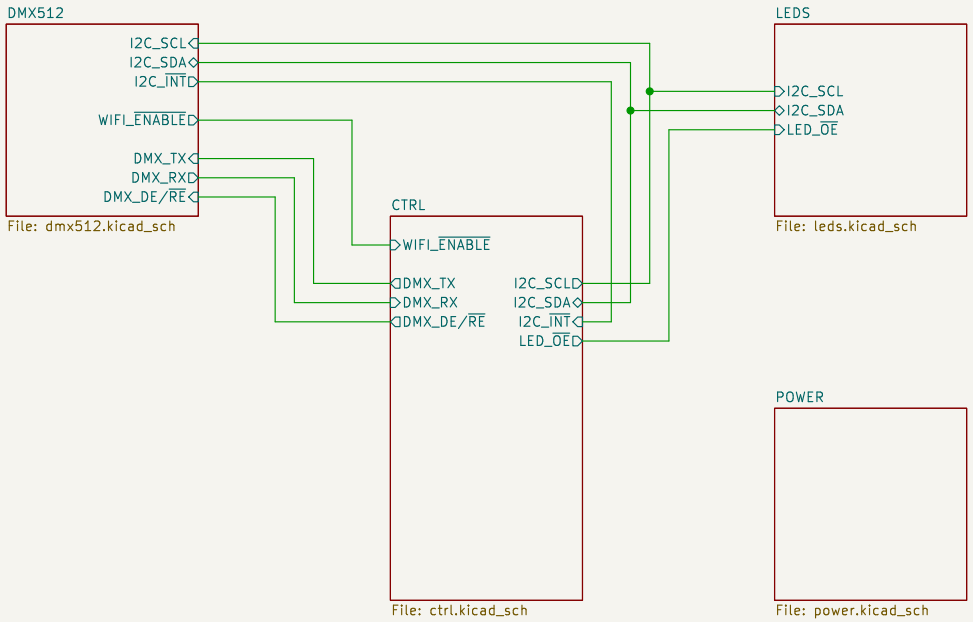

H1 MountingHole

H2 MountingHole

H3 MountingHole

H4 MountingHole

Wires & Bits

Sheet: /
File: emf_beacon.kicad_sch

Title:

Size: A4	Date: 2026-04-10	**Rev: 0**
KiCad E.D.A. 9.0.8		Id: 1/5

Controller

USB Programming

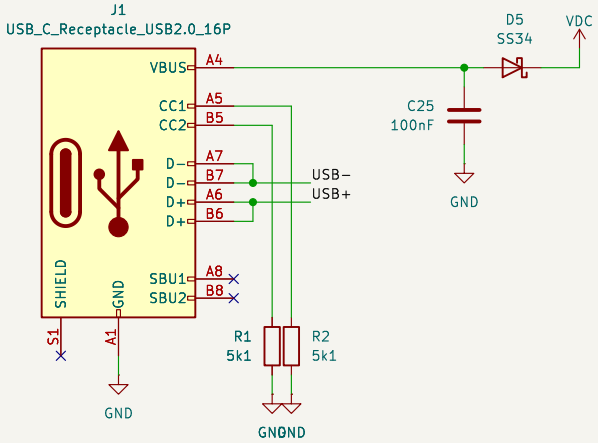

VCC Monitoring

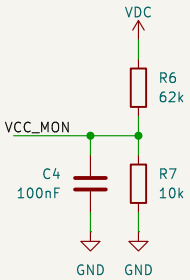

Voltage Monitor
Vmax is 17.5V
Vadc × ((43kΩ + 10kΩ) ÷ 10kΩ) = VCC
Vadc × 5.3 = VCC
1lsb = 4,271µV

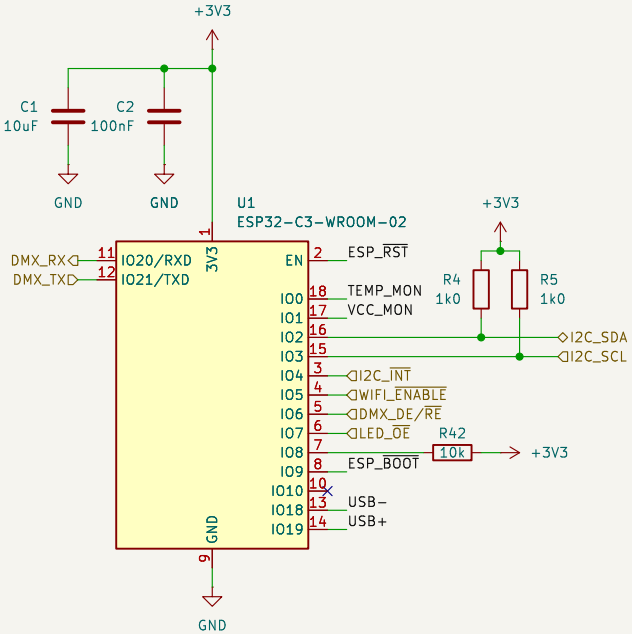

Temperature Monitoring

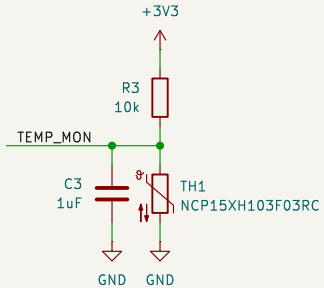

Auto reset

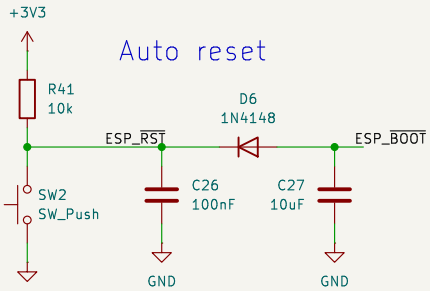

Short press resets the ESP32
Long press resets the ESP32
and puts it in bootloader mode

Status LEDs?
EEPROM?

Wires & Bits		
Sheet: /CTRL/		
File: ctrl.kicad_sch		
Title:		
Size: A4	Date: 2026-04-10	**Rev: 0**
KiCad E.D.A. 9.0.8		Id: 2/5

DMX512

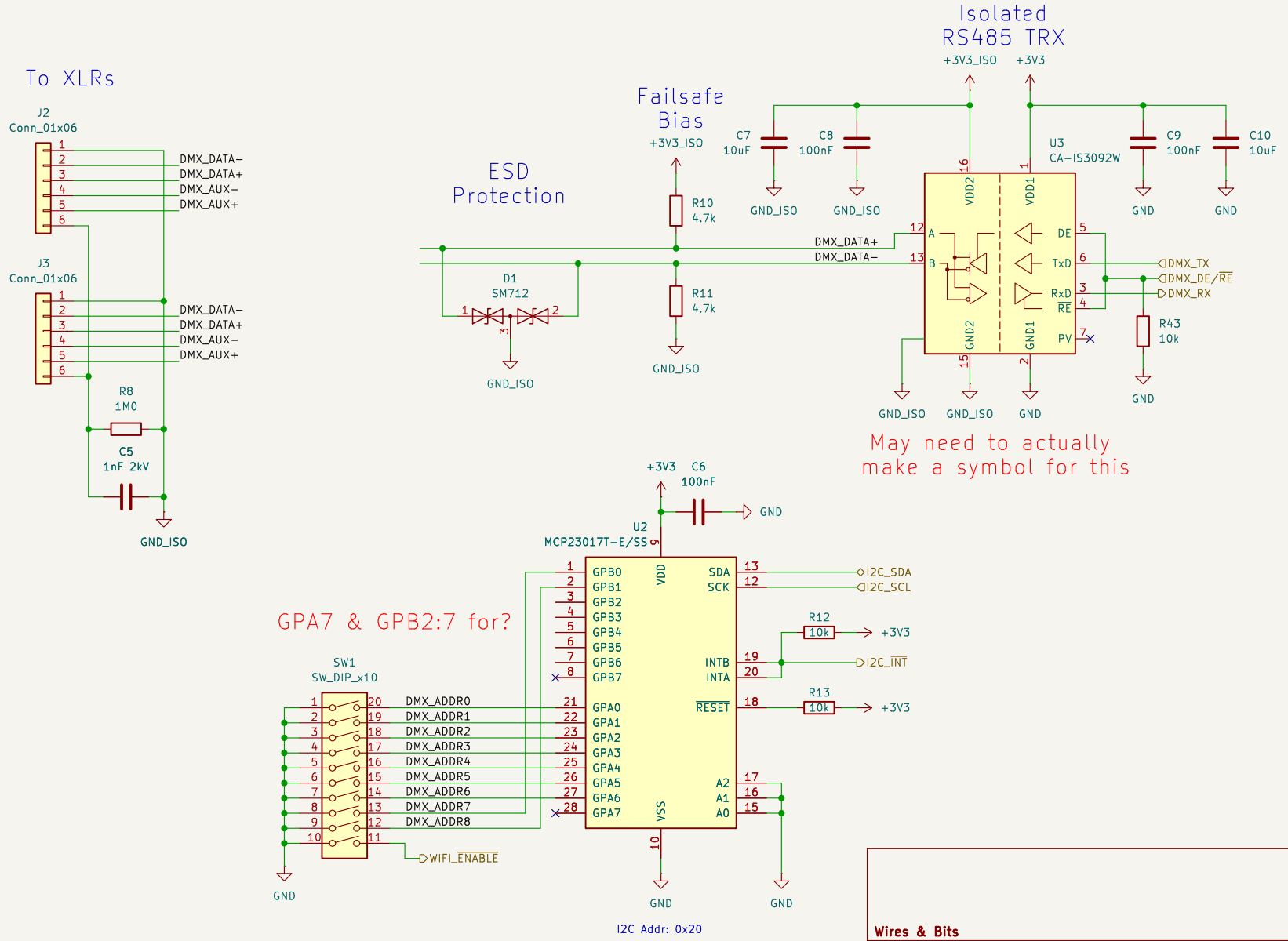

https://dfimg.dfrobot.com/wiki/23269/DFR0944_esp32−s3−based−dmx512−smart−lighting−controller_schematics_V1.0.pdf

https://www.ti.com/lit/an/slla272d/slla272d.pdf

Wires & Bits

Sheet: /DMX512/
File: dmx512.kicad_sch

Title:

Size: A4	Date: 2026−04−10	**Rev: 0**
KiCad E.D.A. 9.0.8		Id: 3/5

LED Driver

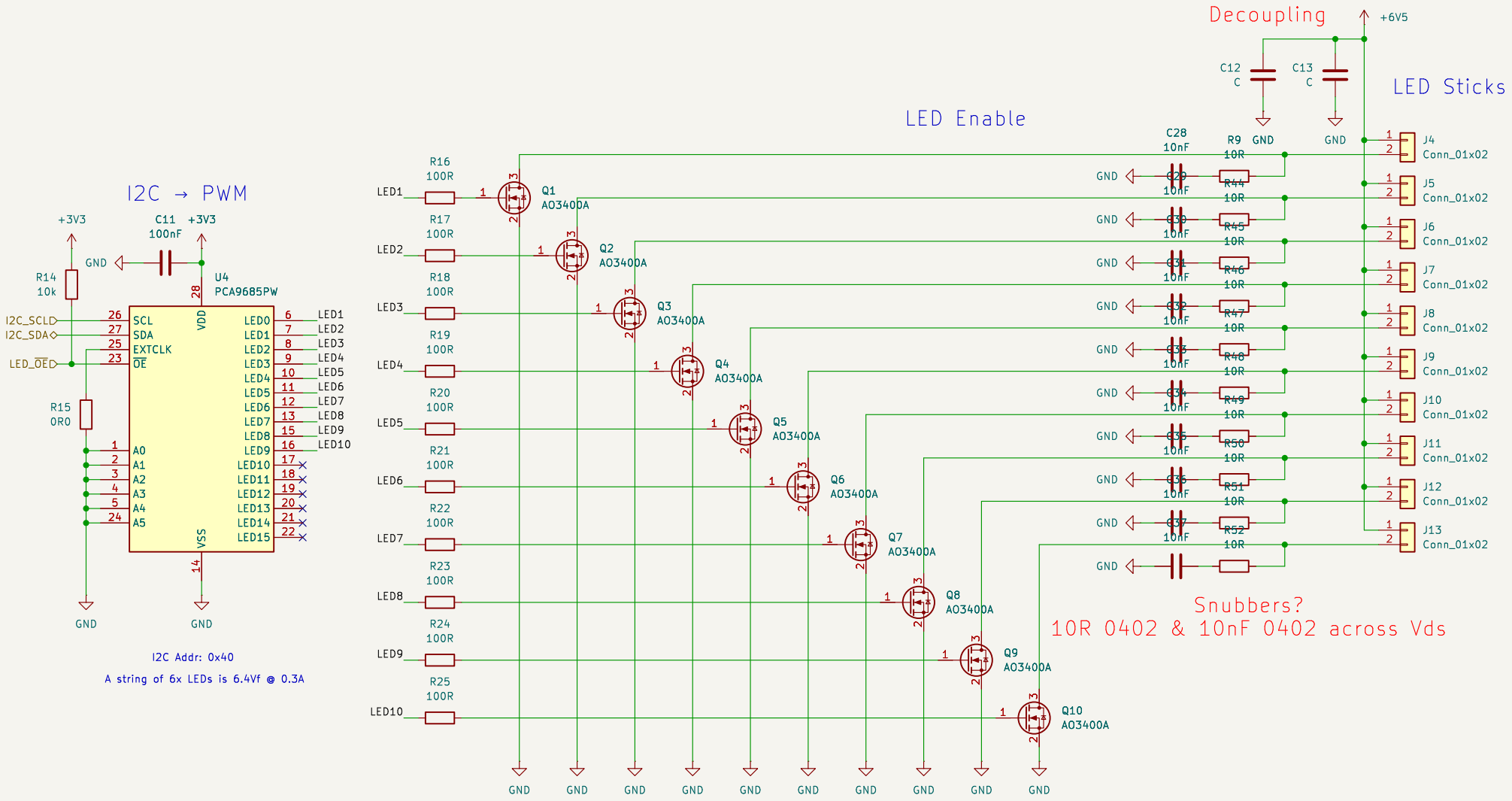

Wires & Bits

Sheet: /LEDS/
File: leds.kicad_sch

Title:

Size: A4	Date: 2026-04-10	**Rev: 0**
KiCad E.D.A. 9.0.8		Id: 4/5

Power Supplies

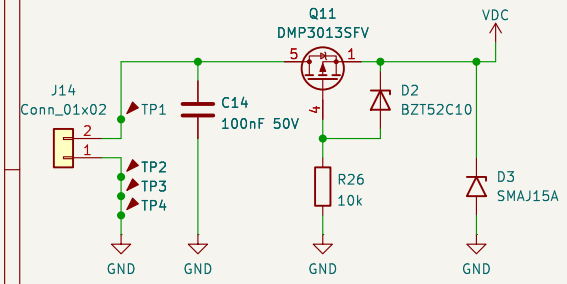

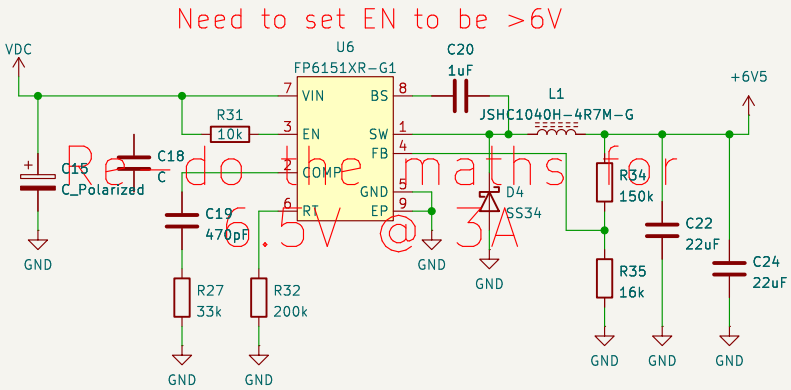

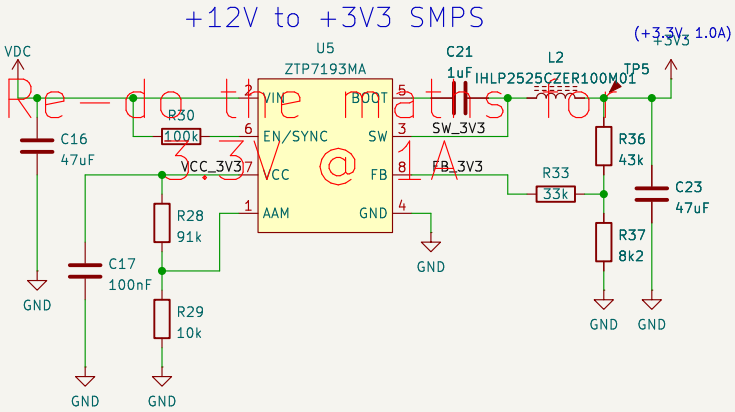

Combined Power LED

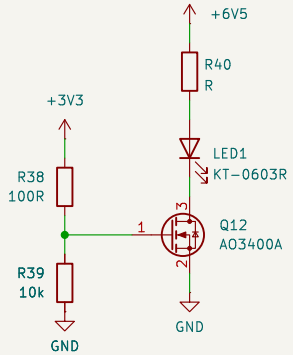

Wires & Bits		
Sheet: /POWER/		
File: power.kicad_sch		
Title:		
Size: A4	Date: 2026-04-10	**Rev: 0**
KiCad E.D.A. 9.0.8		Id: 5/5