Spec:

Interfaces:
Ideally DMX512 (5pin XLR) and Art-Net (RJ45)
At least one, slight DMX512 preference
+12V DC input
weatherproof connections
10x 6.4V 0.3A LED strips

Control:
Treat as 10x lights per beacon
be able to set normal brightness for each 'light'
but fast enough for strobe effect for each 'light'

Misc:
JLC Assembly
Target quantity is 15

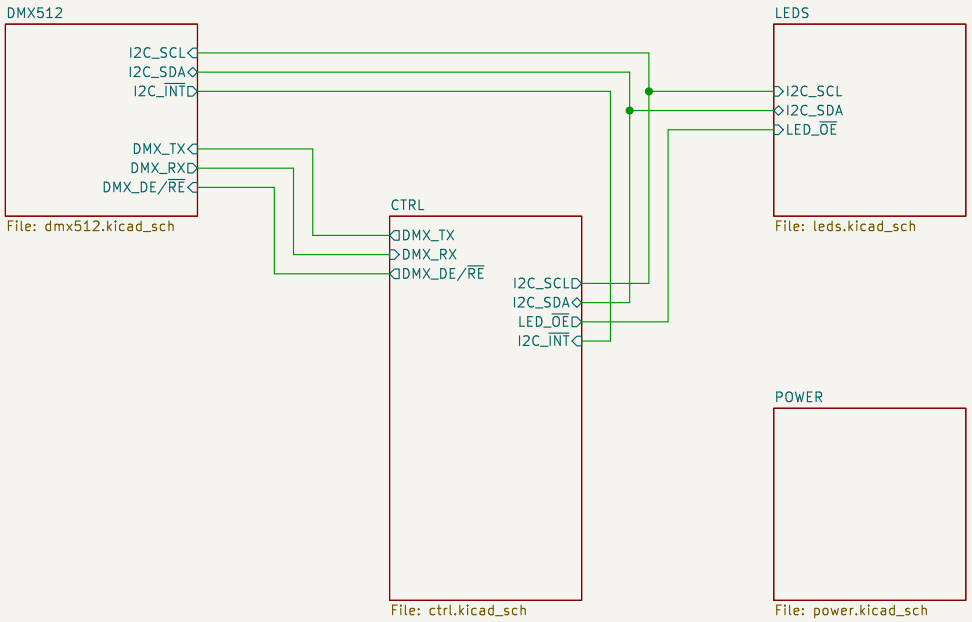

DMX512's XLRs and
Art-Net's RJ45 may
get spun out to
external PCBs

H1 MountingHole
H2 MountingHole
H3 MountingHole
H4 MountingHole

Wires & Bits

Sheet: /
File: emf_beacon.kicad_sch

Title:

Size: A4	Date: 2026-04-10	**Rev: 0**
KiCad E.D.A. 9.0.8		Id: 1/5

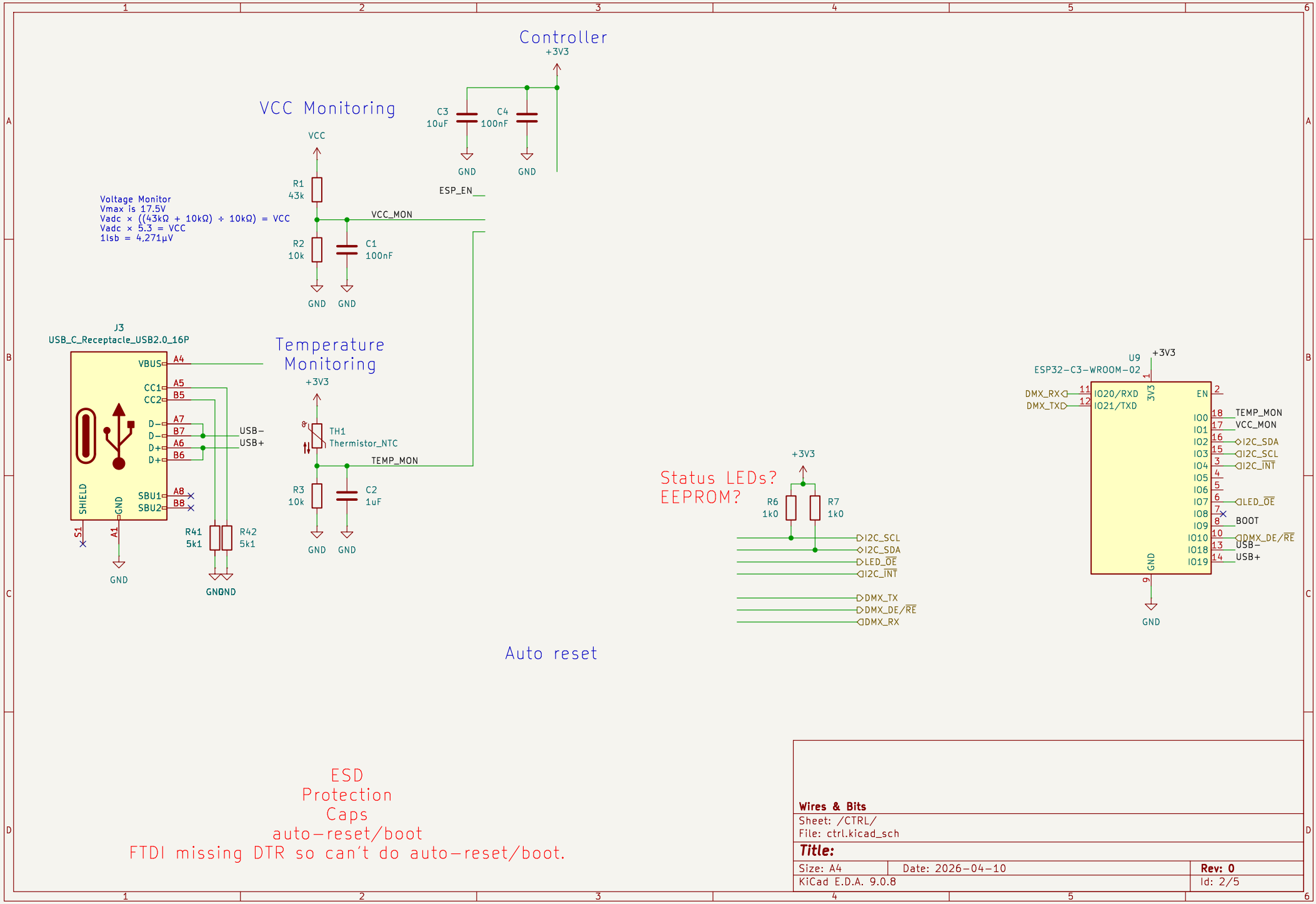
Controller
+3V3
C3
10uF
C4
100nF
GND
GND
ESP_EN
VCC Monitoring
VCC
R1
43k
R2
10k
C1
100nF
VCC_MON
GND
GND
Voltage Monitor
Vmax is 17.5V
Vadc × ((43kΩ + 10kΩ) ÷ 10kΩ) = VCC
Vadc × 5.3 = VCC
1lsb = 4,271µV
J3
USB_C_Receptacle_USB2.0_16P
VBUS
A4
CC1
A5
CC2
B5
D−
A7
D−
B7
D+
A6
D+
B6
USB−
USB+
SHIELD
GND
SBU1
A8
SBU2
B8
S1
A1
GND
R41
5k1
R42
5k1
GNDND
Temperature
Monitoring
+3V3
TH1
Thermistor_NTC
TEMP_MON
R3
10k
C2
1uF
GND
GND
Status LEDs?
EEPROM?
+3V3
R6
1k0
R7
1k0
I2C_SCL
I2C_SDA
LED_OE
I2C_INT
DMX_TX
DMX_DE/RE
DMX_RX
U9
ESP32-C3-WROOM-02
+3V3
DMX_RX
DMX_TX
IO20/RXD
IO21/TXD
3V3
EN
IO0
IO1
IO2
IO3
IO4
IO5
IO6
IO7
IO8
IO9
IO10
IO18
IO19
TEMP_MON
VCC_MON
I2C_SDA
I2C_SCL
I2C_INT
LED_OE
BOOT
DMX_DE/RE
USB−
USB+
GND
GND
Auto reset
ESD
Protection
Caps
auto−reset/boot
FTDI missing DTR so can't do auto−reset/boot.
Wires & Bits
Sheet: /CTRL/
File: ctrl.kicad_sch
Title:
Size: A4
Date: 2026−04−10
Rev: 0
KiCad E.D.A. 9.0.8
Id: 2/5

DMX512

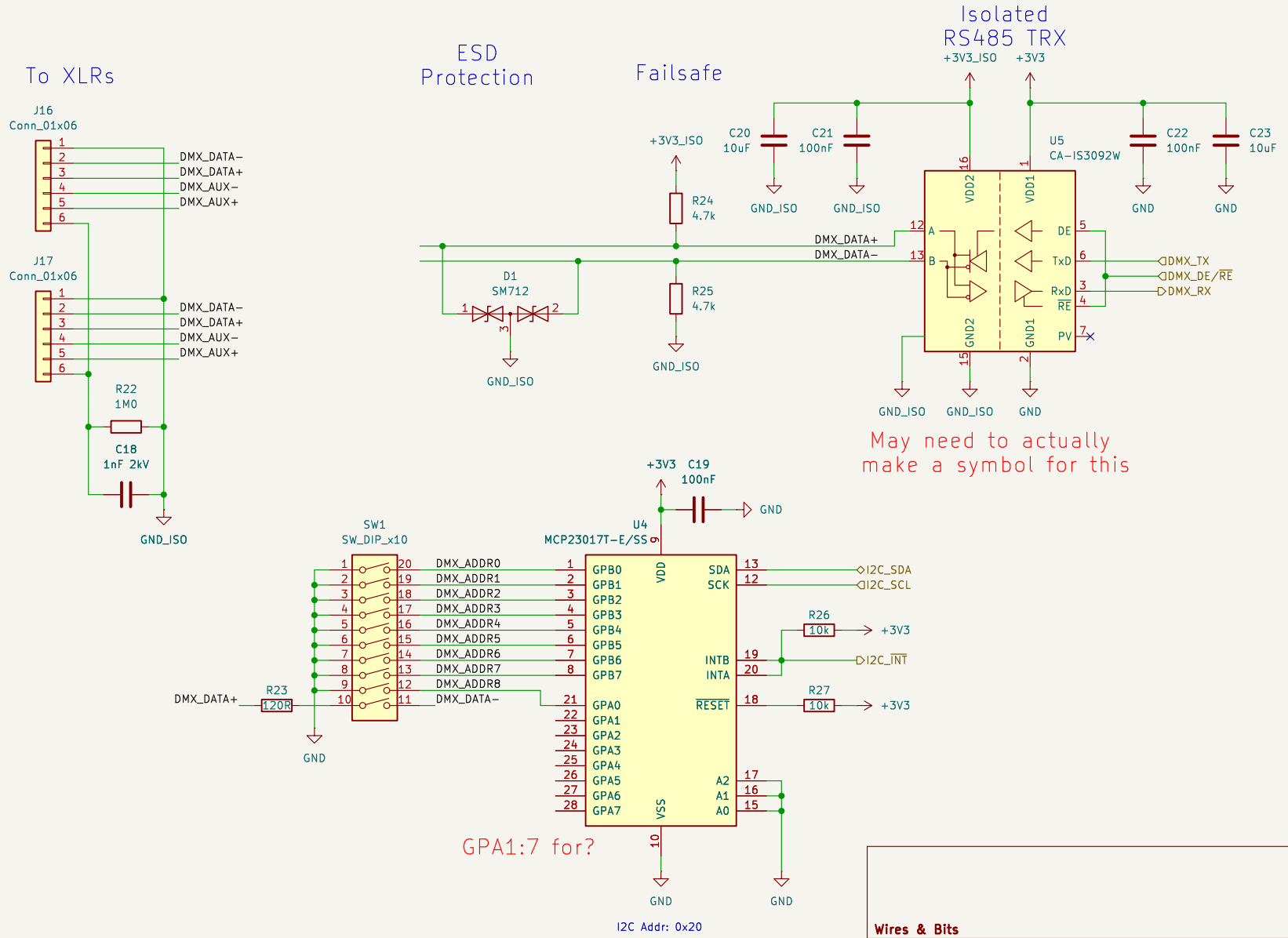

https://dfimg.dfrobot.com/wiki/23269/DFR0944_esp32-s3-based-dmx512-smart-lighting-controller_schematics_V1.0.pdf

https://www.ti.com/lit/an/slla272d/slla272d.pdf

Wires & Bits		
Sheet: /DMX512/		
File: dmx512.kicad_sch		
Title:		
Size: A4	Date: 2026-04-10	**Rev: 0**
KiCad E.D.A. 9.0.8		Id: 4/5

LED Driver

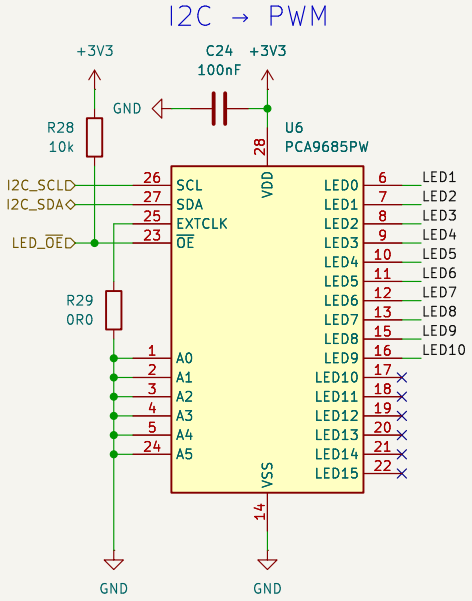

I2C Addr: 0x40

A string of 6x LEDs is 6.4Vf @ 0.3A

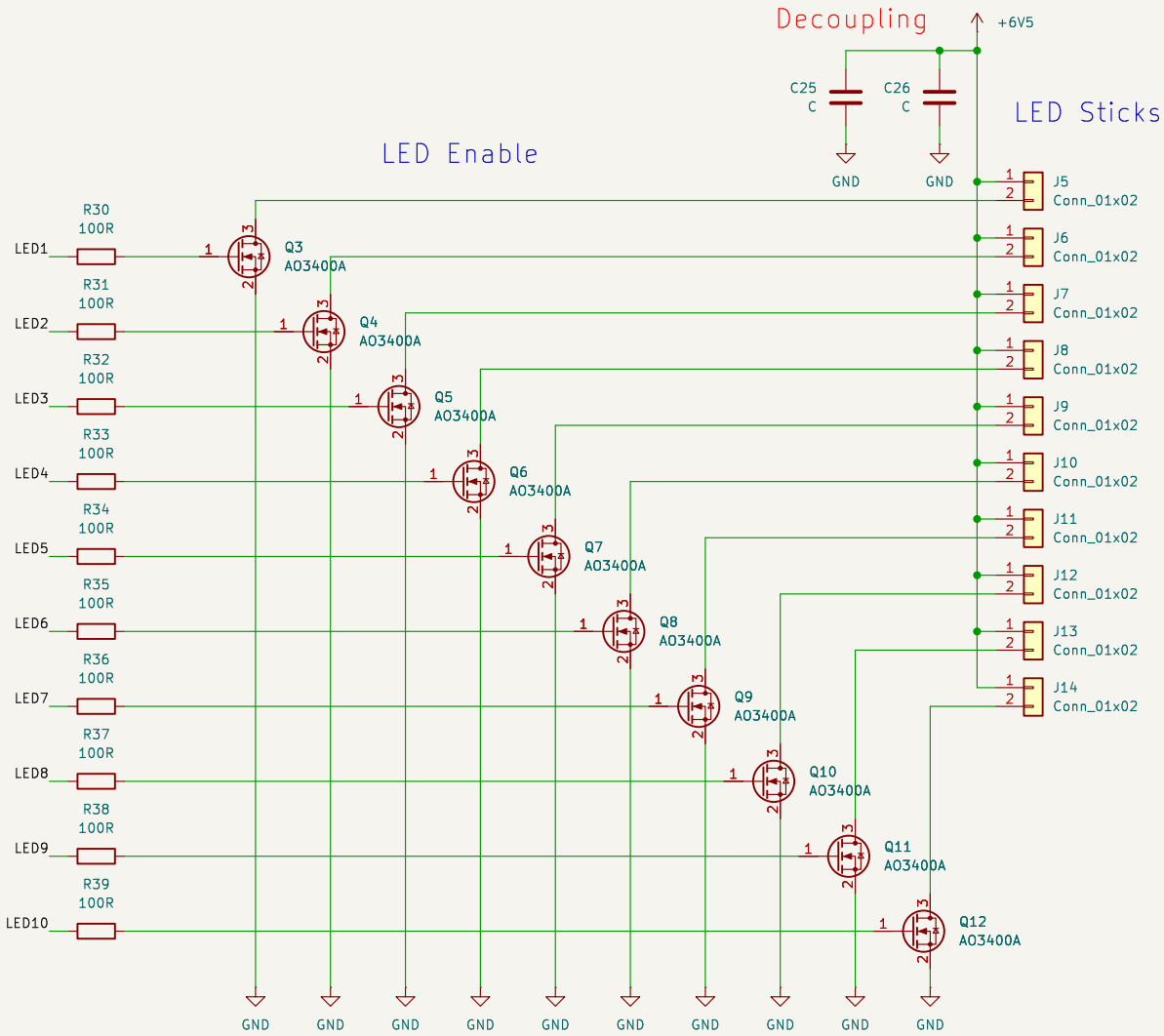

Snubbers?
10R 0402 & 10nF 0402 across Vds

Wires & Bits

Sheet: /LEDS/
File: leds.kicad_sch

Title:

Size: A4	Date: 2026-04-10	**Rev: 0**
KiCad E.D.A. 9.0.8		Id: 5/5

Filtering
Over Voltage
Reverse Voltage

Make input PMOS larger and include soft start
Include large bulk cap for LEDs

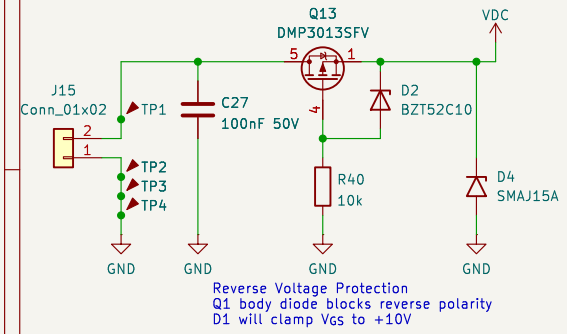

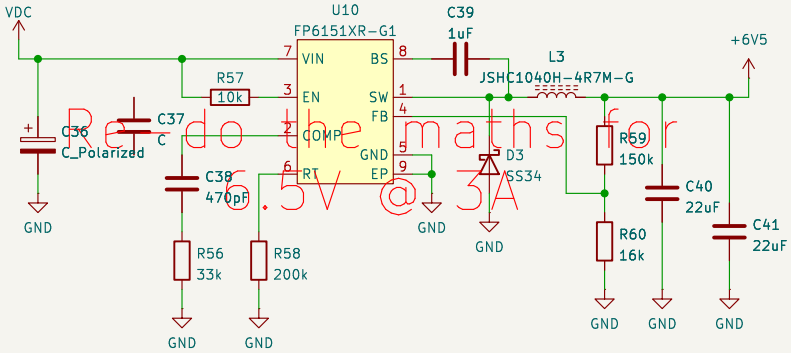

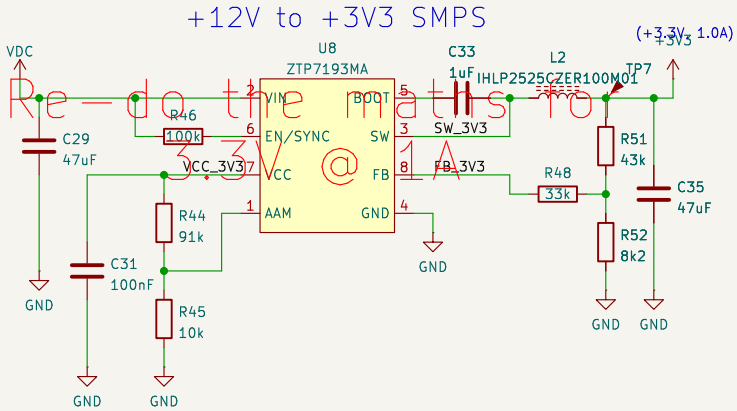

Combined
Power LED

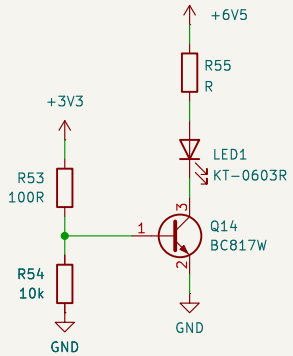

Wires & Bits
Sheet: /POWER/
File: power.kicad_sch

Title:

Size: A4	Date: 2026-04-10	**Rev: 0**
KiCad E.D.A. 9.0.8		Id: 6/5