PON AUNG

Engineering Portfolio

Physics | The Ohio State University | College of Engineering

Interests: Mechanical Engineering, Robotics, Data Science, Machine Learning & AI

Table of Contents

1. Honda BEV Thermal Runaway Detection

Multidisciplinary Capstone — Sponsored by Honda Development & Manufacturing

2. OSU Underwater Robotics — Talos

Mechanical Team — AUV Design, Fabrication & Competition

3. Weather Forecasting with Machine Learning

Physics 5680 — Computational Project

4. Saturated Absorption Spectroscopy of Rubidium

Physics 5700 — Laboratory Report

5. Thermal Conductivity Modeling of a Copper Rod

Physics 5700 — Computational Physics & PINNs

1 Honda: BEV Thermal Runaway Detection

Role: Team Member | **Type:** Multidisciplinary Capstone (ENG 5801) | **Sponsor:** Honda Development & Manufacturing of America

Team: Asmaa Al-Ibraheem (BME), Pon Aung (Physics/ME), Junbo Chen (ECE), Drew Malafa (ME), Connor Ferguson (ME), Zach Tarvin (ME)

Project Overview

As Honda transitions its Marysville Auto Plant (MAP) to full battery electric vehicle production, early detection of lithium-ion battery thermal runaway during assembly is critical to associate safety and production continuity. A single thermal event on the new 800-lb BEV battery packs — too heavy to evacuate manually — could halt the line and endanger workers. Our six-person multidisciplinary team evaluated four complementary sensor technologies under a $3,500 budget, conducting laboratory validation experiments and delivering actionable deployment recommendations to Honda's BEV engineering team.

Stakeholder Discovery & On-Site Visit

The team visited the Marysville Auto Plant on September 17, 2024 to interview key stakeholders and observe the current hybrid battery assembly line. Kyle NiKolet and Tasha Watts from Honda's safety team identified early detection as the top priority: the last thermal event required stopping the line and manually carting a 200-lb hybrid battery out of the building while workers avoided inhaling smoke. The new 800-lb BEV packs cannot be evacuated this way, making proactive detection essential. Sean Kelley and Ravish Eshwarappa from the BEV development team echoed this priority, noting that a single event could cost Honda thousands of dollars in lost production time, wages, and repairs.

A key design constraint from these interviews was that the detection system must operate independently of existing manufacturing equipment — it cannot be integrated into the assembly line controls or require modifications to Honda's production flow.

Concept Screening & Selection

The team began with 7-10 candidate detection technologies drawn from literature review and industry benchmarking (Tesla's IR imaging, Amphenol cell-vent sensors, Valeo multi-parameter modules, pressure sensing). A structured screening matrix scored each concept against the stakeholder-driven user-needs hierarchy, with safety weighted highest. The pyrometer and MEMS sensor tied for first (net score +2), acoustic/ultrasonic placed second (+1), and IR thermal imaging scored lowest (-1). The team combined the acoustic and ultrasonic categories — functionally equivalent for this application — and carried forward four sensors for laboratory validation.

Detection Technologies & Validation Results

Technology	Method	Key Findings
Infrared Pyrometer (Optris CS LT)	Tested at 1.5, 3, and 4.5 ft against FLIR TG15 reference camera; 15:1 spot-size ratio	Verified temperatures above 41 C at up to 3 ft; accuracy degraded beyond 4.5 ft. Black surface treatment on Al 2024 significantly improved readings.

Technology	Method	Key Findings
Thermal MEMS (Omron D6T-32L)	Heated aluminum plate from ambient to 150 C (thermal runaway onset); tested at 1-3 m	Produced accurate heating curves on affected pixels at ~4 samples/sec; stable baselines on unaffected pixels. Sensitivity limited by reflective surfaces.
HF Gas Sensor (Oxidation Tech.)	Three trials at each of 0.5, 1.5, and 2.5 m; timed detection of HF from glass etching reaction	Detected 6.6 ppm in 6.5 s at 0.5 m; detected sub-1 ppm at 2.5 m. CV under 4% for timing, under 8% for concentration across all distances.
Ultrasonic Transducer (Olympus V103-SB, 1 MHz)	Pulse-echo at 5 V p-p, 1 MHz burst; 3 experiments across full charge/discharge cycles	ANOVA confirmed significant voltage trends with charge state ($p = 1.91x10^{-4}$ charging; $p = 4.17x10^{-60}$ discharging). Aluminum casing attenuated the signal in Experiment 3.

Ultrasonic Deep Dive

The ultrasonic transducer experiments were the most technically involved. The team used a 5 V peak-to-peak, 1 MHz sine wave in a five-cycle burst (Keysight 33500B waveform generator, Keysight DSOX1204G oscilloscope). Experiment 1 charged a 4,000 mAh Li-ion battery from 0-100% and captured waveforms at every 10% increment. Experiment 2 repeated the process during discharge. Experiment 3 introduced an aluminum plate between the transducer and battery to simulate a manufacturing casing. One-way ANOVA at alpha = 0.05 confirmed statistically significant voltage variation across charge states in Experiments 1 and 2, while Experiment 3 showed signal attenuation through the casing — motivating the team's recommendation to explore a pitch-catch (dual-transducer) configuration in future work.

Budget

Item	Vendor	Price	Purpose
Optris CS LT Pyrometer	AutomationDirect	$125.00	Non-contact temperature
ACCSMIACC Cable	AutomationDirect	$52.00	Pyrometer interface
Omron D6T-32L MEMS Sensor	Mouser	$135.58	Thermal array imaging
MEMS Evaluation Board	—	$102.78	Sensor interface
HF Gas Sensor	Mouser	$257.07	Chemical detection
Olympus V103-SB Transducer	Olympus	$444.00	Ultrasonic NDT
Tripod + cables + couplant	Various	$90.68	Support equipment
Total		**$1,268.11**	**36% of $3,500 budget**

Conclusion & Recommendations

No single sensor provided complete coverage; however, a layered multi-sensor approach combining the pyrometer's speed, the MEMS array's spatial resolution, the HF sensor's chemical specificity, and the ultrasonic transducer's internal state monitoring offers the most robust detection strategy. The team delivered the full validation dataset, a sensor selection matrix, and recommended deployment configurations to Honda's BEV engineering group.

Sensor	Recommended Use Case
Pyrometer	Monitoring a known high-risk location (e.g., ECU or cell connection) with direct line-of-sight
tMEMS	Identifying a problematic region during production; supporting issue playback when a critical temperature is exceeded
HF Sensor	Complementary detection of ongoing thermal runaway events as part of a layered system
Ultrasonic	Spot-checking battery state of charge during QA inspection

Recommended next steps include evaluating lower-wavelength pyrometer models (Optris CT 3M/4M) for improved aluminum readings, testing a pitch-catch ultrasonic configuration with a dedicated receiver transducer, characterizing emissivity effects on actual battery pack casings, and conducting in-plant validation at the Marysville facility.

My Contributions

- Participated in the September 2024 on-site visit to Honda's Marysville Auto Plant and contributed to stakeholder interviews that shaped the project's safety-first requirements.
- Led background research on thermal runaway causes, global BEV market trends, and existing detection methods (Tesla IR imaging, Amphenol vent sensors, Valeo modules), and authored the societal impact analysis connecting Honda's BEV transition to EPA emissions targets and the Paris Agreement framework.
- Conducted concept screening and selection using a weighted user-needs matrix, narrowing the candidate set from 10 technologies to 4.
- Designed and executed laboratory validation experiments for the ultrasonic transducer, including MATLAB data acquisition, waveform analysis, and ANOVA statistical testing.
- Built the Python data analytics pipeline for post-processing sensor validation data, including CSV parsing, waveform plotting, and statistical analysis scripts used across all four sensor experiments.
- Co-authored the detailed design report and final poster presentation delivered to Honda's BEV engineering team and MDC instructional staff.

2 OSU Underwater Robotics — Talos

Role: Mechanical Team Member | **Organization:** OSU Underwater Robotics (UWRT) | **Robot:** Talos (Latest AUV)

About the Team

OSU Underwater Robotics designs, builds, and competes autonomous underwater vehicles for the annual RoboSub competition. The Mechanical sub-team owns hull, chassis, and external system design in SolidWorks and fabricates components using campus machine shops.

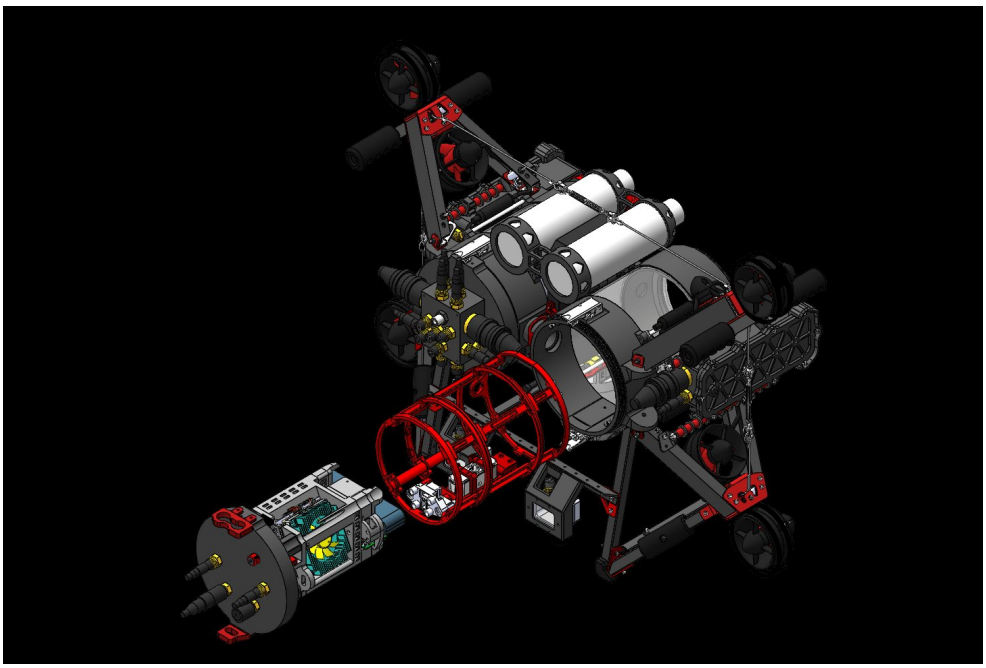

Talos AUV — Full assembly CAD render (SolidWorks)

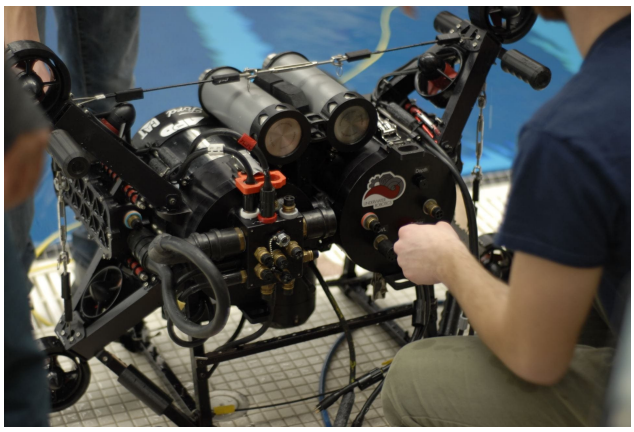

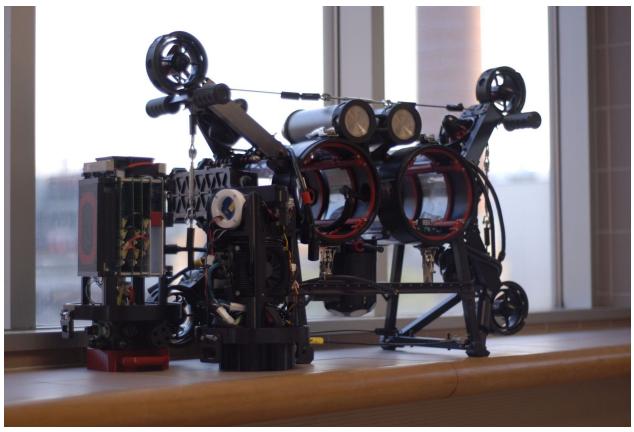

Talos during pool testing (left) and detailed hardware view (right)

Internal Electronics Cage & Vision System

To enable downward-facing perception, UWRT designed a new internal electronics cage housing both a front-facing ZED X and a downward-facing ZED X Mini stereo camera. The system retains the NVIDIA AGX Orin processor with CAN and RS-422 breakout boards, a GSML2 capture card, and a custom power-distribution PCB. New mounting rails clamp onto the hull, integrate leak sensors, and allow the cage

to slide in and out. A spring-loaded connector eliminates manual wire hookups during insertion.

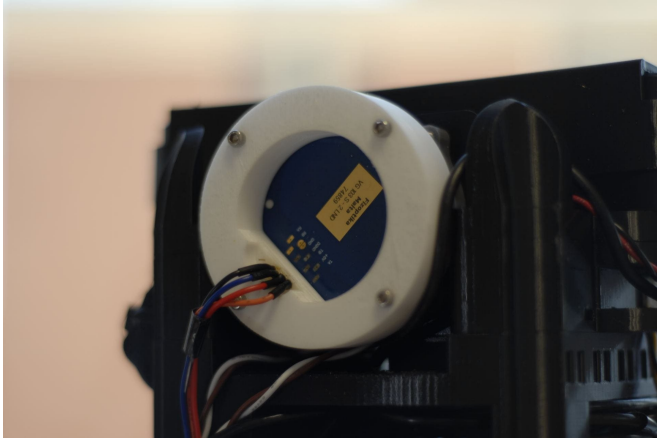

Fiber Optic Gyro transducer integrated into the electronics cage

2 OSU Underwater Robotics — Talos *(continued)*

Torpedo Launcher — Servo Housing & Gearbox Redesign

A persistent leak through the torpedo launcher's dynamic servo seals risked water damage and required constant maintenance after RoboSub 2024. The team replaced the original housings with Delrin units featuring built-in mechanical seals, completely eliminating both dynamic and static leaks. Because the new servos were limited to 270 degrees of controlled rotation, a custom gearbox was designed to restore a full range of motion. A structural brace added a second mounting point to Talos to counteract the increased cantilever mass, and a guiding rod integrated into the torpedo interface dramatically improved launch accuracy.

Result: Water-damage risk to the torpedo launcher servos was eliminated entirely, while accuracy and stability improved over the previous design.

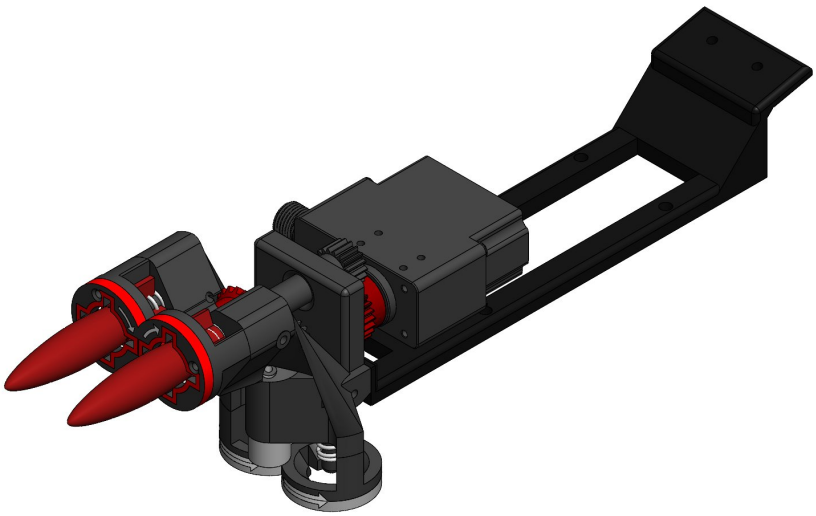

Torpedo launcher assembly — Delrin servo housing, custom gearbox, mounting brace, and torpedo interface

My Contributions

- Designed and fabricated hull and chassis components in SolidWorks; machined parts using campus lathe, mill, and 3D-printing facilities.
- Participated in the servo housing and custom gearbox redesign that eliminated torpedo launcher water-damage risk.
- Performed assembly, integration, and pool testing of the Talos AUV system.
- Coordinated with electrical and software sub-teams to verify mechanical interfaces and mounting solutions met cross-system requirements.

3 Weather Forecasting with Machine Learning

Role: Sole Author | **Course:** Physics 5680, Autumn 2024 | **Tools:** Python, scikit-learn, NOAA API, OpenWeatherMap

Project Overview

Built an end-to-end machine learning pipeline to predict daily weather variables for Columbus, Ohio, using 50+ years of historical observations from John Glenn Columbus International Airport (NOAA). Engineered temporal features — 7-day rolling means, 1- and 7-day lags, and seasonal indicators — then compared Ridge Regression (linear baseline) against Random Forest (non-linear ensemble).

Methodology

The dataset comprised daily records of TMAX, TMIN, TAVG, and PRCP, supplemented with real-time feeds from the NOAA Climate Data API and OpenWeatherMap. Feature engineering produced 12 input variables per day. A strictly chronological train/test split prevented data leakage, ensuring the model was never evaluated on data it had implicitly seen during training.

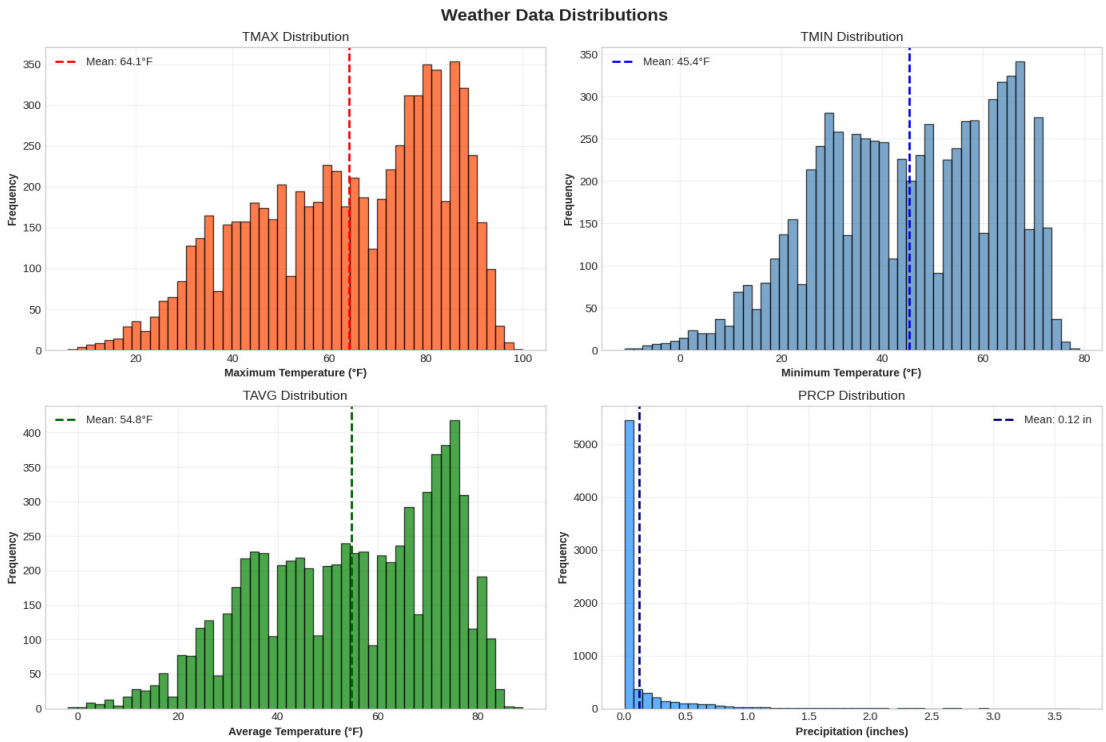

Weather variable distributions for Columbus, OH (50+ years of NOAA data)

Results

Metric	Ridge Regression	Random Forest	Improvement
R^2 (TMAX, Day+1)	0.77	0.82	+6.5%
RMSE (TMAX, Day+1)	Baseline	~1 F lower	Meaningful
Top Feature	—	TMAX_roll7 (importance 0.669)	—

Random Forest captured non-linear feature interactions that Ridge Regression could not, delivering stronger temperature predictions across all forecast horizons. Precipitation remained difficult to predict from surface observations alone — an expected limitation given its stochastic nature.

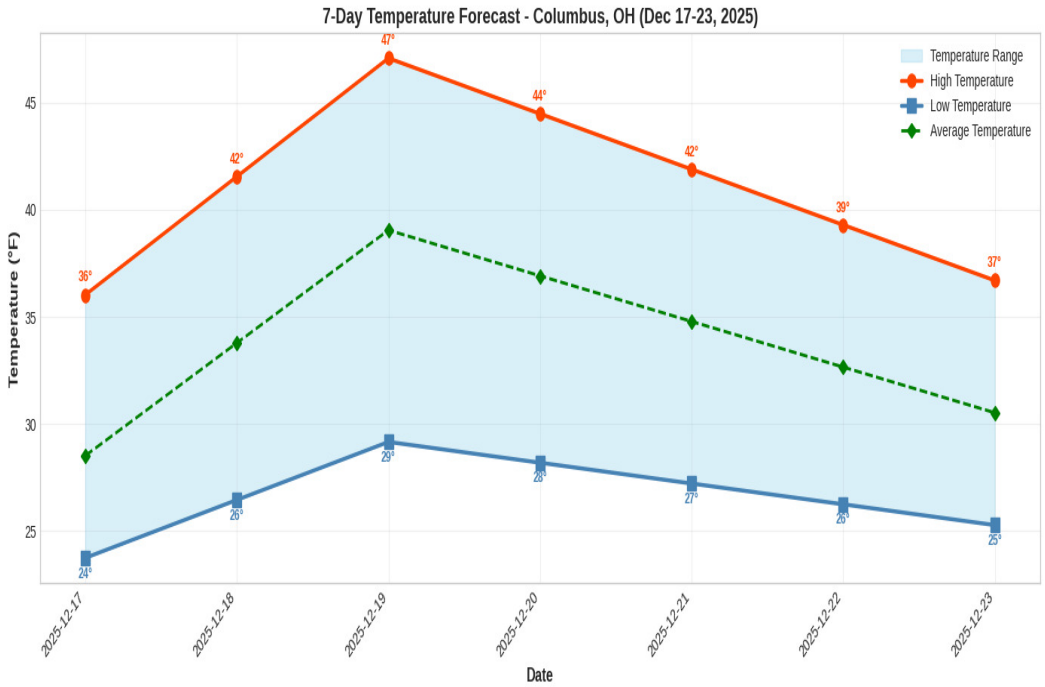

7-day temperature forecast generated by the trained Random Forest model

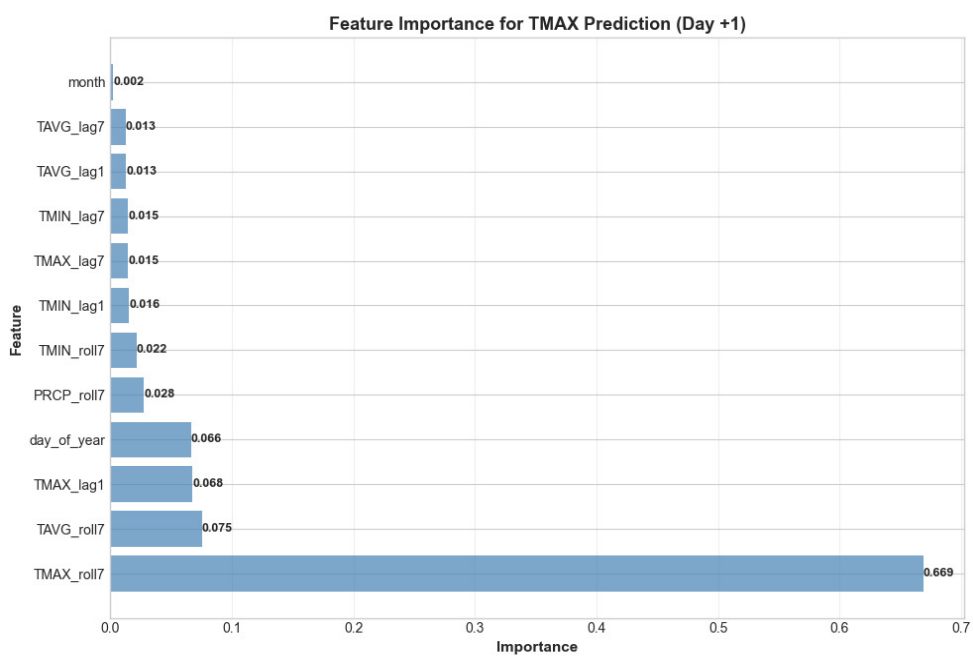

Feature importance analysis for TMAX prediction (Day +1)

Key Takeaways

- The 7-day rolling mean of TMAX dominated feature importance at 0.669, confirming that recent thermal history is the single strongest predictor of next-day temperature.

- Future work should incorporate meteorological reanalysis variables and pressure gradients to improve precipitation skill.
- Demonstrated practical feasibility of ML-based weather forecasting using publicly available data and standard Python tools — the full pipeline runs in under 30 seconds on a commodity laptop.

4 Saturated Absorption Spectroscopy of Rubidium

Role: Co-Author | **Course:** Physics 5700/5710, Spring 2025 | **Collaborators:** Gretchen He, Jonas P

Project Overview

Resolved the hyperfine structure of the $5^2P_{3/2}$ excited states of ^{85}Rb and ^{87}Rb using saturated absorption spectroscopy, overcoming the ~500 MHz Doppler broadening that limits conventional transmission methods. A tunable external-cavity diode laser near 780.2 nm was swept across the D2 transition line of natural rubidium vapor.

Methodology

Counter-propagating pump and probe beams from the same laser addressed zero-velocity atoms at exact resonance, producing narrow Lamb dips (~10 MHz wide) that reveal true transition frequencies beneath the Doppler envelope. An unequal-arm Michelson interferometer with path difference delta-L = 0.35 m provided absolute frequency calibration at ~429 MHz per fringe.

Key Results

Parameter	Measured	Accepted	% Difference
^{87}Rb ground splitting	6.65 +/- 0.3 GHz	6.835 GHz	2.7%
^{85}Rb ground splitting	3.0 +/- 0.2 GHz	3.036 GHz	1.2%
Interferometer FSR	429 +/- 4 MHz	c / (2 delta-L)	—
^{85}Rb F'=3 to F'=2	~267 MHz	267 MHz	< 5%
^{87}Rb F'=4 to F'=3	~121 MHz	121 MHz	< 5%

Both real hyperfine transitions and crossover peaks were resolved for all four ground-state transitions, achieving sub-Doppler resolution of approximately 10 MHz. Ground-state splittings agreed with accepted values to within 3%, consistent with the estimated 5% total uncertainty.

Conclusion

The experiment confirmed that saturated absorption spectroscopy can resolve atomic energy level splittings far below the Doppler width. Both real and crossover transitions were identified consistent with the delta-F = 0, +/-1 selection rules. The Michelson interferometer provided reliable absolute frequency calibration, and the measured hyperfine splittings closely matched accepted values for both rubidium isotopes.

Achieved sub-Doppler spectroscopy resolving hyperfine structure with ~10 MHz resolution, confirming atomic physics theory with less than 3% deviation from accepted values.

5 Thermal Conductivity Modeling of a Copper Rod

Role: Sole Author | **Course:** Physics 5700, Spring 2025 | **Tools:** Python, NumPy, SciPy, TensorFlow, Matplotlib

Project Overview

Modeled one-dimensional heat diffusion along a 0.75-inch-diameter, 84.25 cm copper rod instrumented with eleven Type-T thermocouples (3-inch spacing) and logged at 0.5 Hz via a National Instruments NI-9213 module. Developed five progressively refined computational models — from a closed-form Fourier series to a Physics-Informed Neural Network (PINN) — and validated each against two independent experimental cooling runs using chi-squared goodness-of-fit analysis.

Experimental Setup

A steady-state temperature gradient of approximately 45 degrees C was first established across the rod, with the hot end (TC1) heated and the cold end (TC11) cooled by water flow. The cooling phase was initiated by switching off the heater and opening both cold-water valves. Per-thermocouple systematic offsets (~0.6 degrees C) were measured from pre-experiment baselines and subtracted from all data. The rod was insulated with three layers of 2-inch foam inside a wooden box.

Model Progression

Model	Left BC	Right BC	Radial Loss	Key Characteristic
0 (Analytic)	T_cold	T_cold	None	Closed-form Fourier series; fails during heating phase
1 (FD)	T_cold	T_cold	None	FTCS finite-difference; same BC limitation as Model 0
2 (FD)	TC1 data	T_cold	None	Realistic hot-end BC; major improvement over Models 0-1
2b (FD)	TC1 data	TC11 data	None	Both BCs from data; good agreement across full rod
3 (Optimized)	TC1 data	TC11 data	Yes	SciPy-optimized radial heat loss coefficient c

The finite-difference models used the forward-time centered-space (FTCS) scheme with stability analysis to ensure convergence. Replacing double for-loops with NumPy vectorized slice operations reduced model runtimes from several minutes to approximately 3 seconds — a critical optimization for the parameter scan in Model 3.

Optimized Radial Heat Loss

Model 3 introduced a radial heat loss term to account for energy escaping through the foam insulation. The radial heat loss coefficient *c* was optimized using **scipy.optimize**, first via a coarse scan and then a fine-tune step. The optimized value was 15-24x larger than the theoretical estimate based on pure cylindrical conduction through the foam — indicating that convection, radiation, imperfect insulation contact, and thermocouple lead conduction all contribute significantly to real-world heat loss.

Physics-Informed Neural Network (PINN)

A PINN was implemented in TensorFlow to complement the finite-difference approach. Unlike the traditional models, the PINN treats the thermal diffusivity alpha-squared as a **trainable parameter**, recovering it directly from the experimental data while simultaneously satisfying the heat equation as a soft constraint.

PINN Parameter	Value
Architecture	4 hidden layers x 128 neurons, tanh activation
Training	5,000 epochs with learning rate schedule (10^{-3} to 10^{-4})
Collocation Points	5,000 randomly sampled; resampled every 500 epochs
IC/BC Loss Weights	Boosted 10x over physics and data loss
Loss Components	Data + physics (PDE residual) + initial condition + boundary conditions
Performance (Run 2)	MAE = 0.42 C, RMSE = 0.53 C

Results & Validation

Chi-squared analysis across both experimental runs confirmed the model performance ranking: Model 3 (optimized) performed best overall, followed closely by Model 2b, with Models 0 and 1 failing by orders of magnitude due to incorrect boundary conditions. The PINN achieved accuracy comparable to Model 2b while additionally recovering the thermal diffusivity as a learned parameter close to the textbook value for copper. Cross-run consistency between Run 1 and Run 2 validated that the results were not artifacts of a single dataset.

Performance ranking: Model 3 (optimized) >= Model 2b >> Model 2 >> Model 1 ~ Model 0. Data-driven boundary conditions reduced model-experiment residuals by over an order of magnitude.

Key Technical Achievements

- Solved the 1D heat equation numerically using FTCS finite differences with stability analysis, and analytically via Fourier series with separation of variables.
- Built a PINN (TensorFlow) that recovered thermal diffusivity as a learnable parameter — a technique drawn from Raissi et al. (2019) and applied to real experimental data.
- Performed parameter optimization (scipy.optimize) and chi-squared goodness-of-fit testing across 5 models and 2 independent datasets.
- Preprocessed real sensor data: thermocouple offset correction, cooling-phase identification via peak detection, and exploratory data analysis across three experimental runs.
- Identified and corrected errors in reference documentation (rod length: 84.25 cm, not 80.25 cm; thermocouple coordinate convention: TC1 = hot end).