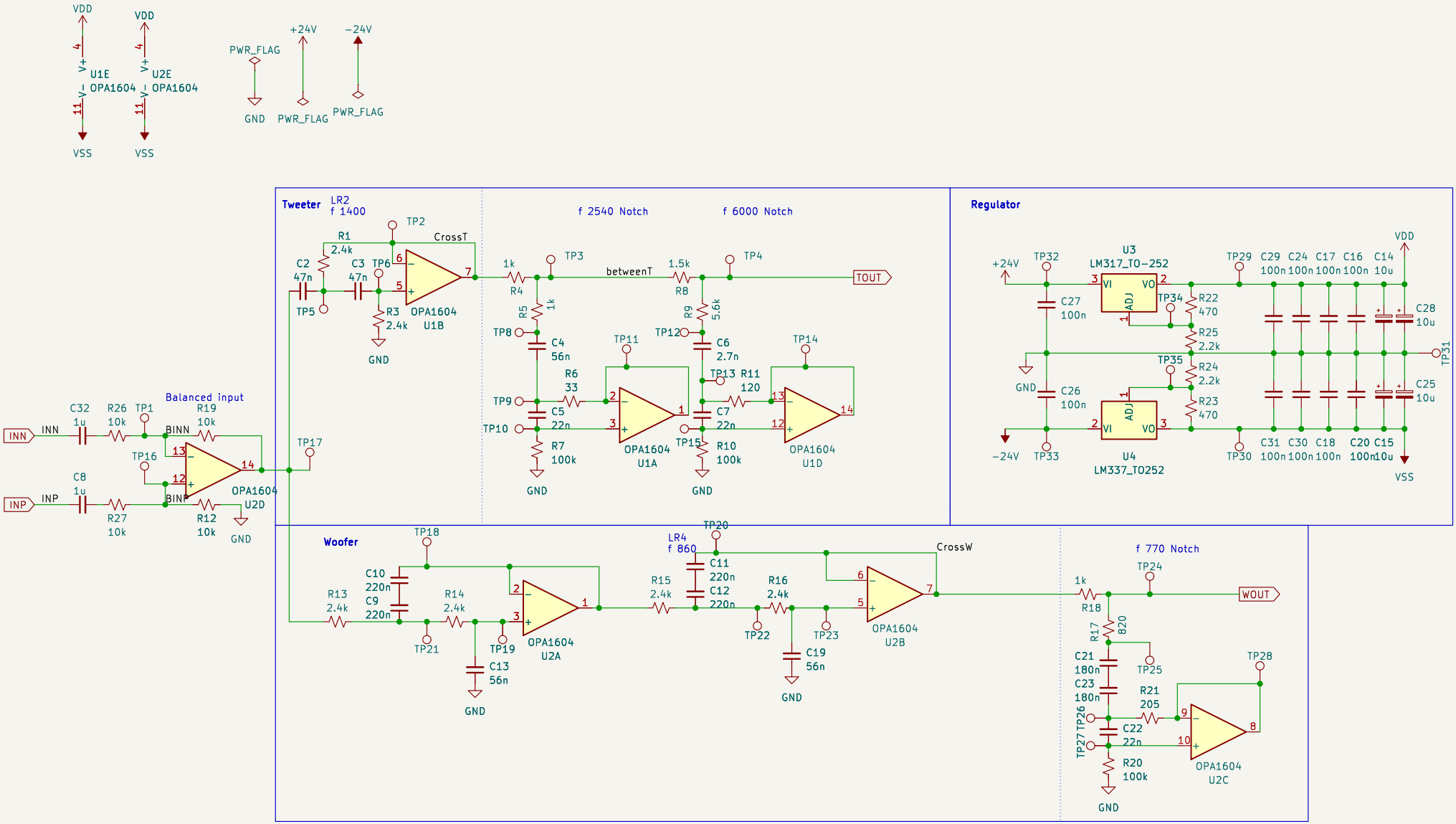

https://github.com/Ponkala/audiopoli−protone

Drawn by Oskari Ponkala

Sheet: /
File: AP−crossover.kicad_sch

Title: Audiopoli protone crossover

Size: A4	Date: 19.04.2023	Rev: B
KiCad E.D.A. kicad−cli 7.0.2−6a45011f42-172-ubuntu22.04.1		Id: 1/1