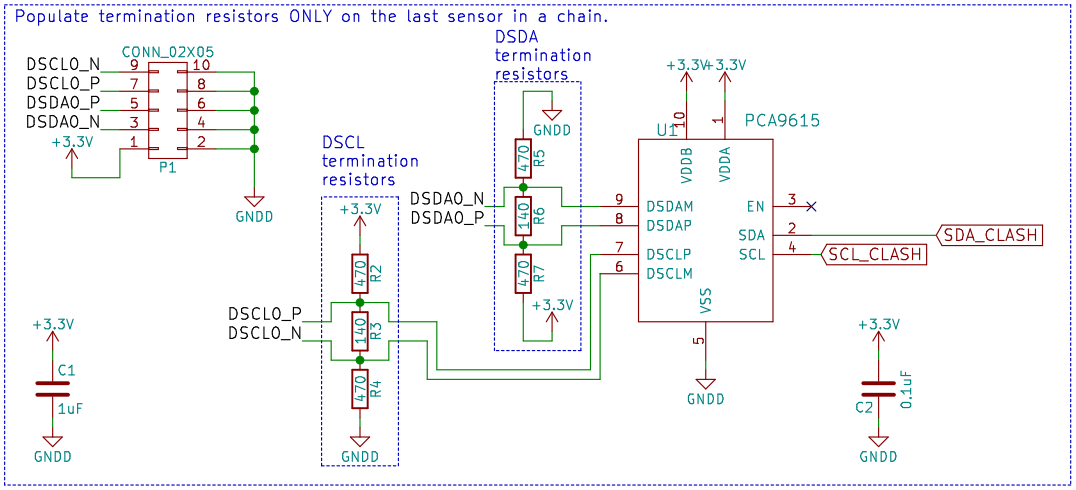

Power Termination resistor values calculated with Texas Instruments' AN-847.

R1	R8	R14	Translation Byte	New Address
97K6	0	0	0b 0000 0000	0x29
53K6	47K5	0	0b 0000 0111	0x2E
59K0	40K2	0	0b 0000 0110	0x2F
66K5	34K8	0	0b 0000 0101	0x2C
71K5	28K0	0	0b 0000 0100	0x2D

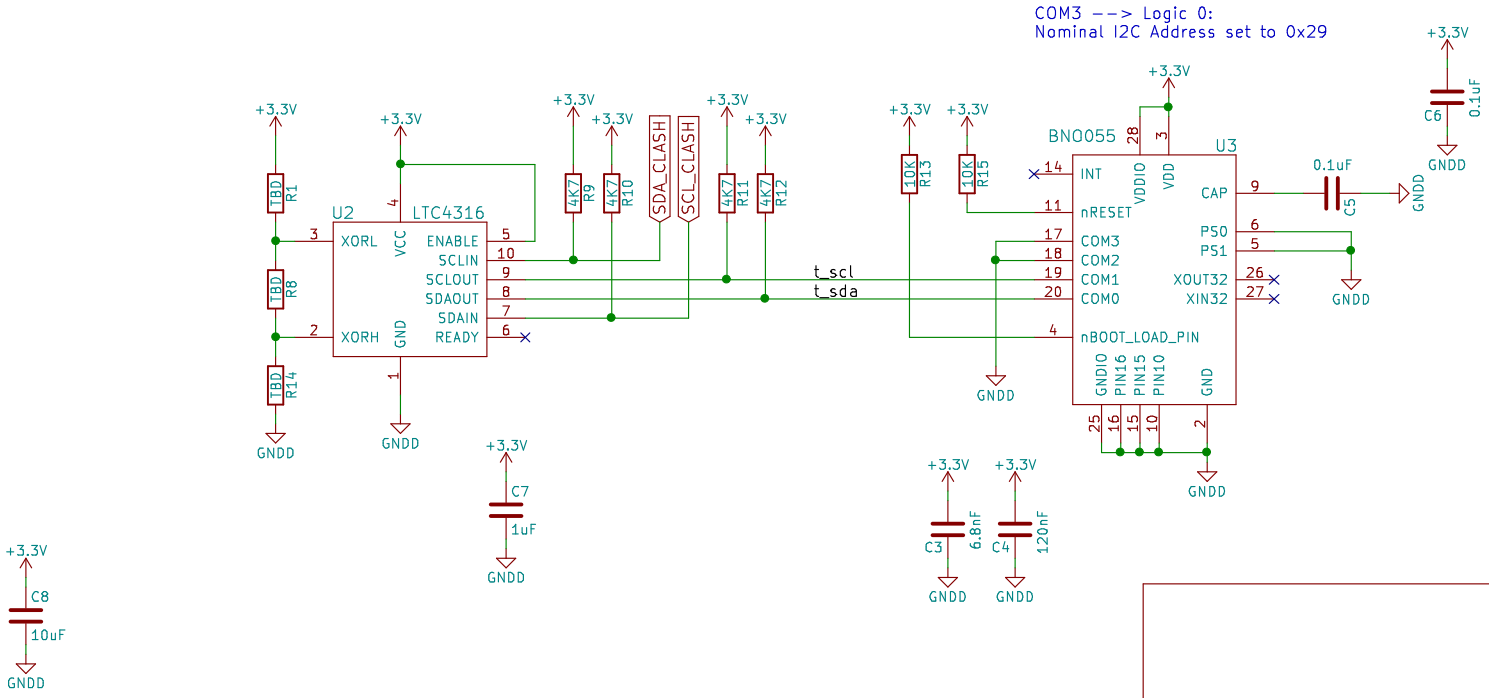

Sheet: /
File: imu_noodle.sch

Title:

Size: A4	Date:	Rev:
KiCad E.D.A. kicad 4.0.4+e1-630848ubuntu15.10.1-stable		Id: 1/1