Populate termination resistors ONLY on the last sensor in a chain.

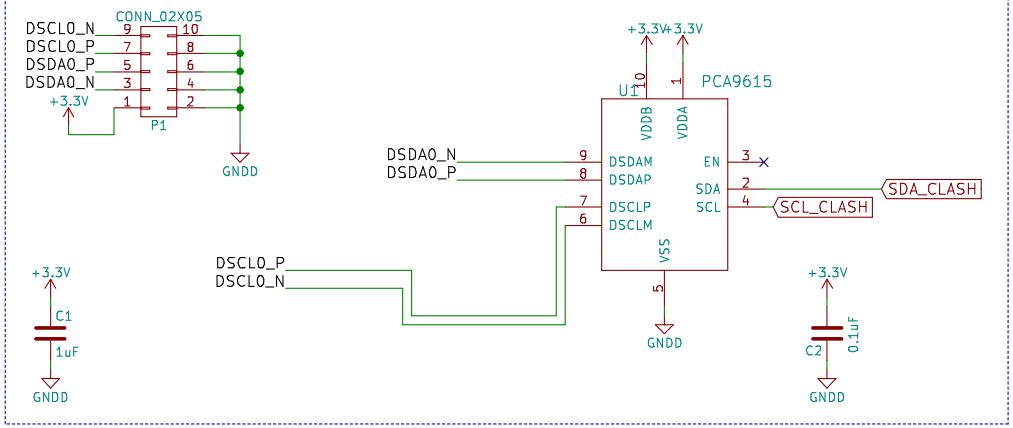

R1	R8	R14	New Address
97K6	0	0	0x29
76K8	21K5	0	0x2A
82K5	15K4	0	0x2B
63K4	33K2	0	0x2C
69K8	27K4	0	0x2D
52K3	45K3	0	0x2E
57K6	39K2	0	0x2F
43K2	52K3	10K0	0x30
49K9	46K4	10K0	0x31
29K4	66K5	10K0	0x32
36K5	59K0	10K0	0x33
16K5	78K7	10K0	0x34
23K2	73K2	10K0	0x35

Power Termination resistor values calculated with Texas Instruments' AN-847.

COM3 --> Logic 0:
Nominal I2C Address set to 0x29

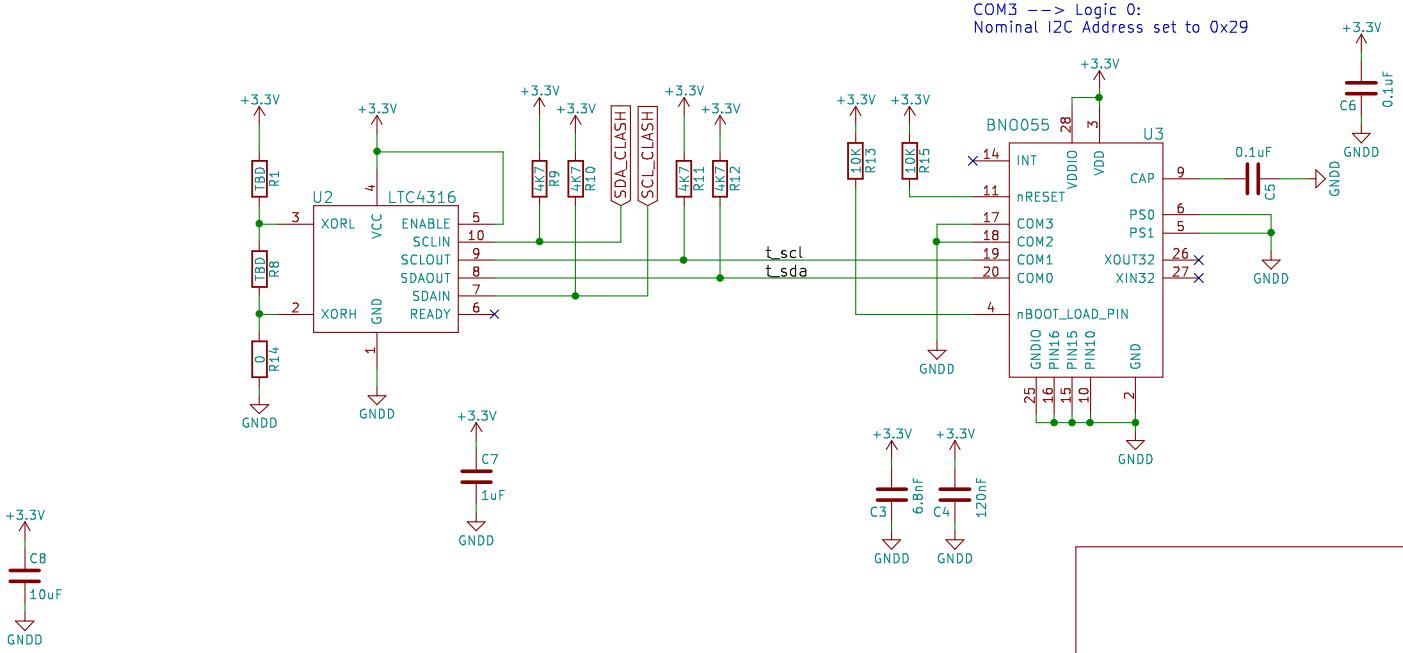

Sheet: /
File: imu_noodle.sch

Title:

Size: A4	Date:	Rev:
KiCad E.D.A. kicad 4.0.4+e1-630848ubuntu15.10.1-stable		Id: 1/1