Portfolio: Pooja Ramesh

Mechanical Engineering and Design

Table of Contents

- Introduction
- Loop Heat Pipe Cooling System
- Conceptual 2-Stage Rocket to Karman Line
- Winches, Hoists and Hydraulic Drives, and accessories
- 3D printed prototypes and assemblies
- Range Sensitivity and Detection
- Arduino Based Control Unit for Temperature Selection and Flow Regulator: Cold Water Plunge Unit
- Certificates

I am a **Mechanical Engineer** specializing in the development of innovative design solutions and high-performance mechanical systems. Currently pursuing a **Master of Engineering in Mechanical Engineering** at **Northeastern University.**

I leverage a proven track record of enhancing product performance, reducing manufacturing costs, and leading complex, cross-functional projects from initial concept to functional prototype.

Design and Analysis of Liquid Cooling System for High-Performance Laptops

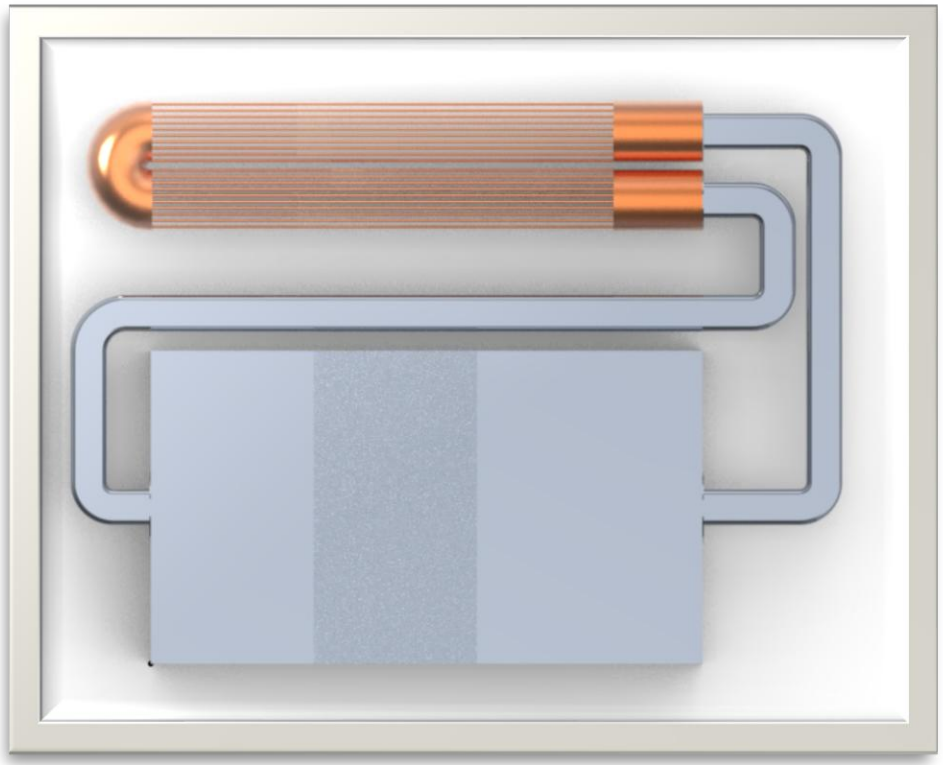

Design Solution: Engineered a compact **Closed Loop Heat Pipe (LHP)** system utilizing a porous wick structure for passive capillary pumping, eliminating the need for mechanical components.

Modeled a custom evaporator and condenser in **SolidWorks** with an 8mm height constraint to fit within standard laptop chassis.

Conducted **CFD analysis (ANSYS Fluent)** to simulate a heat flux of 15,000 W/m^2, evaluating temperature gradients and fluid dynamics.

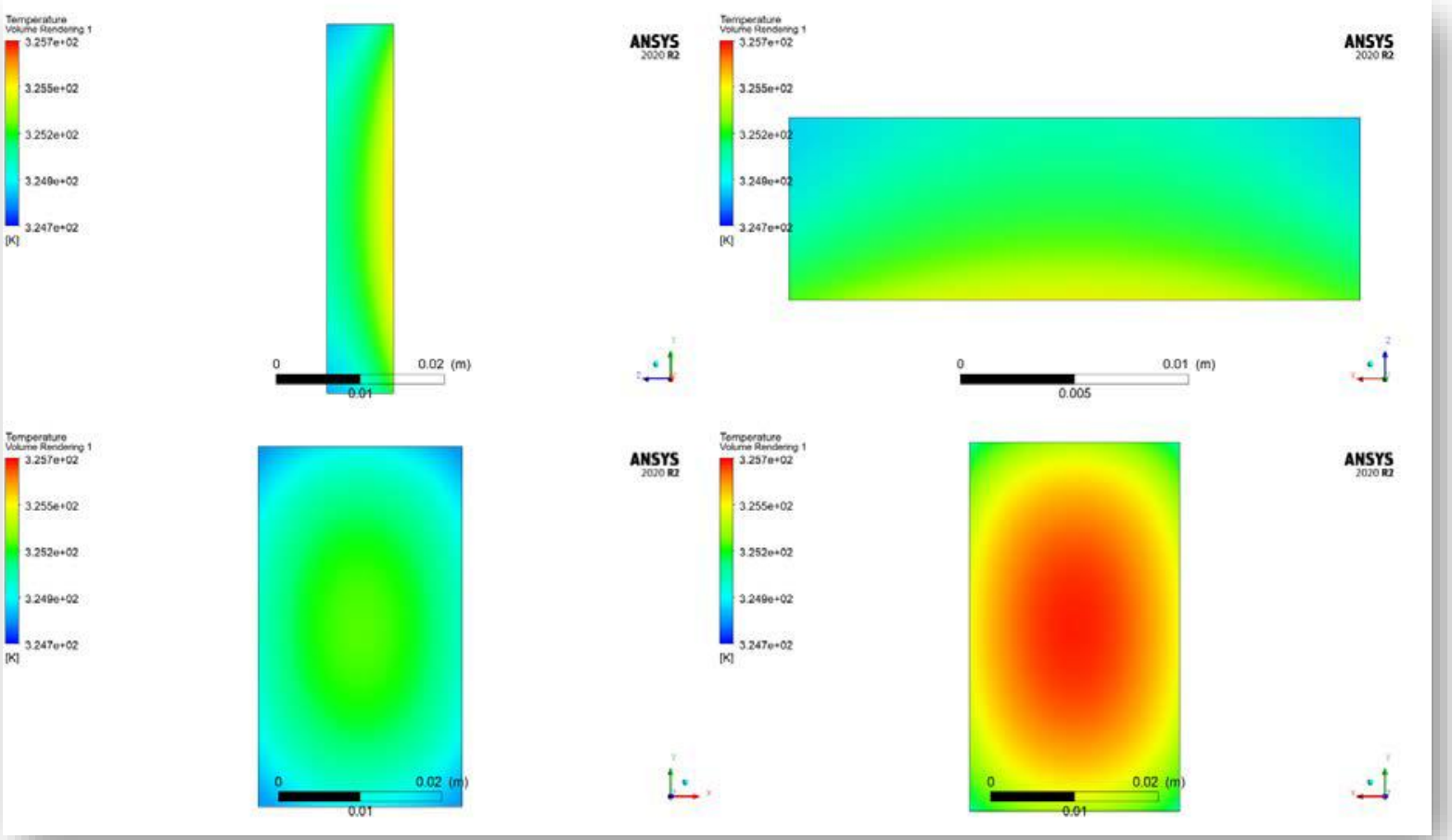

Thermal Analysis: Processor

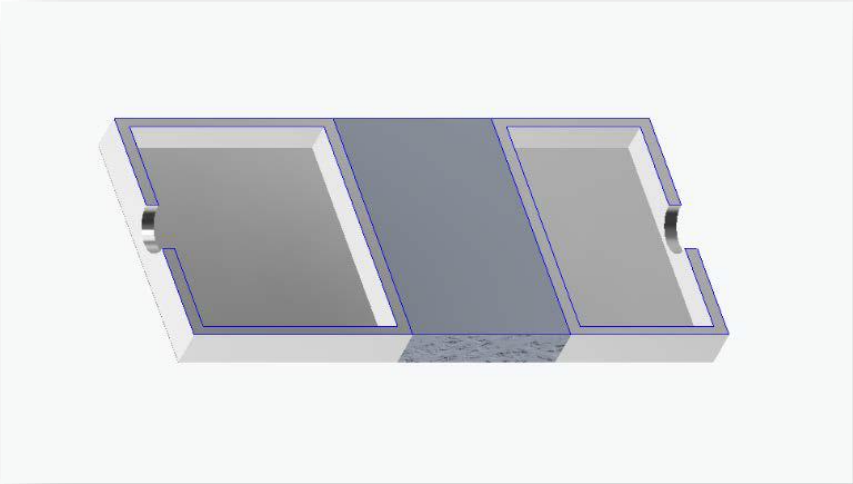

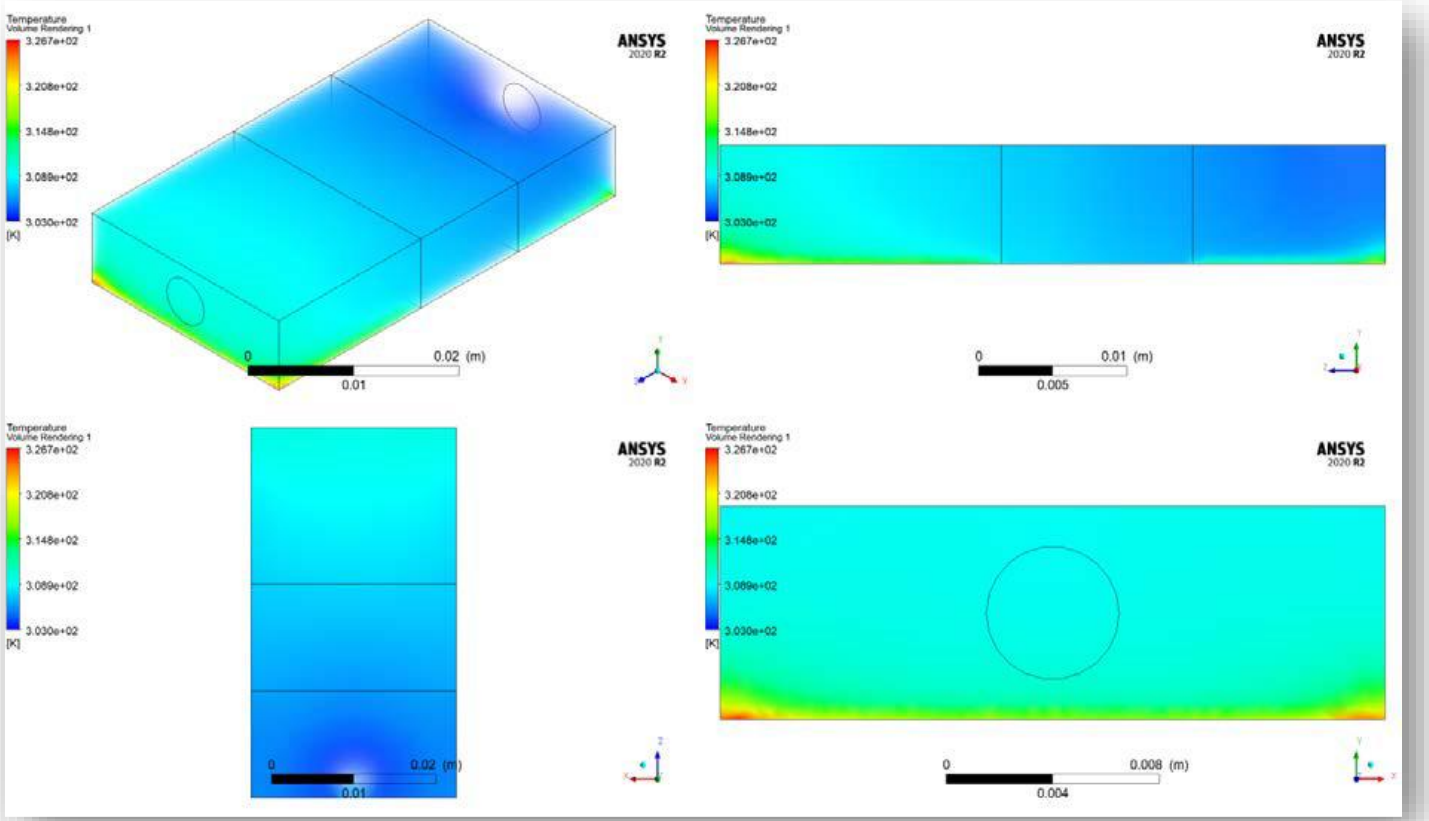

Thermal Analysis: Evaporator

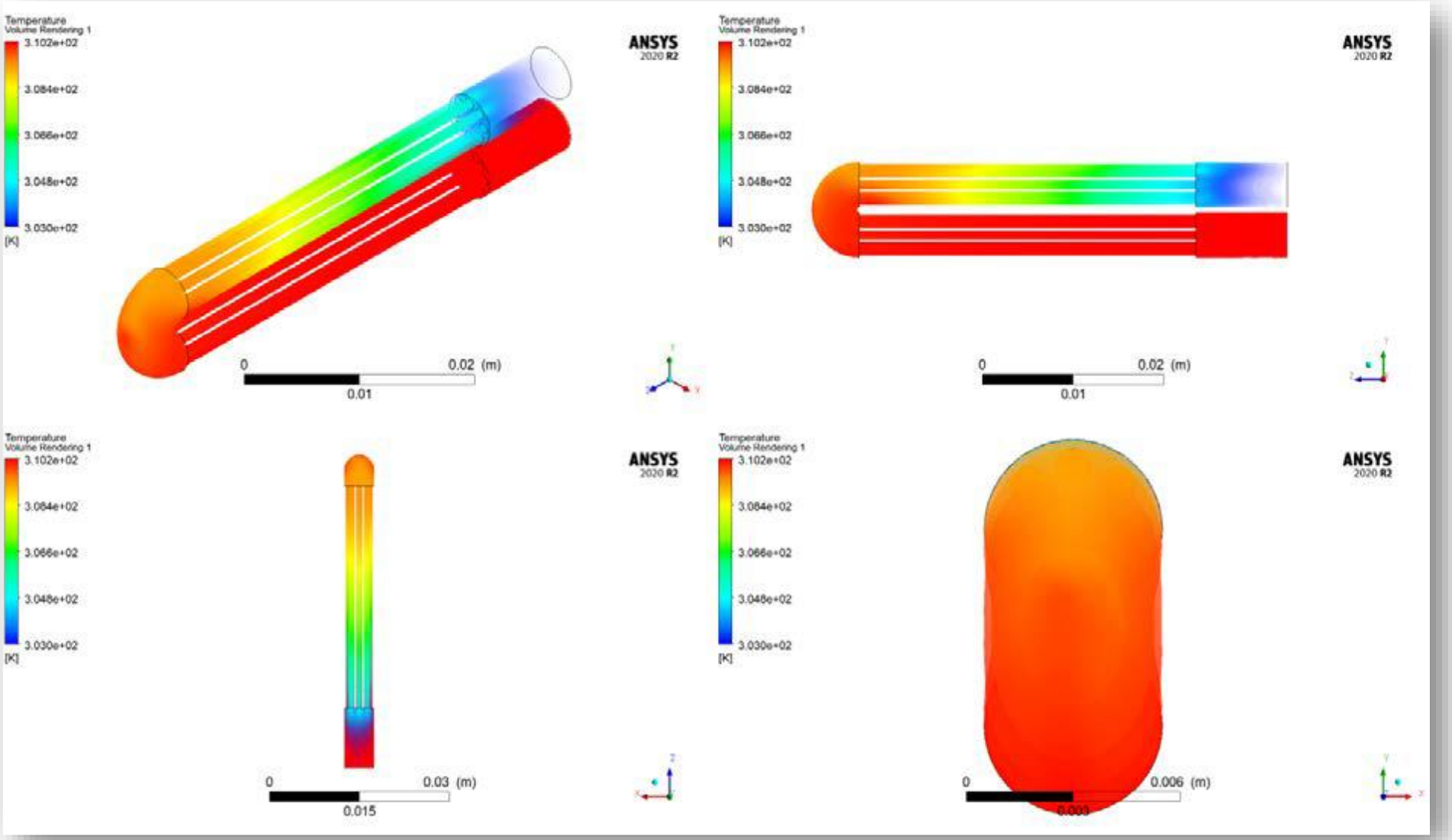

Thermal Analysis: Evaporator

Project: Design and Analysis of Liquid Cooling System for High-Performance Laptops

Validated the porous medium's permeability and inertial resistance using Darcy's law and porous media conditions in Fluent.

Material & Fluid Optimization: Validated a Copper-Water configuration as the most efficient thermal conductor and working fluid through iterative testing.

Key Results: Achieved a **24°C reduction** in temperature compared to the conventional air-cooled system (78°C), effectively preventing thermal throttling.

Conceptual design of an almost fully reusable Two-Stage Rocket to cross the edge of space, the Karman Line.

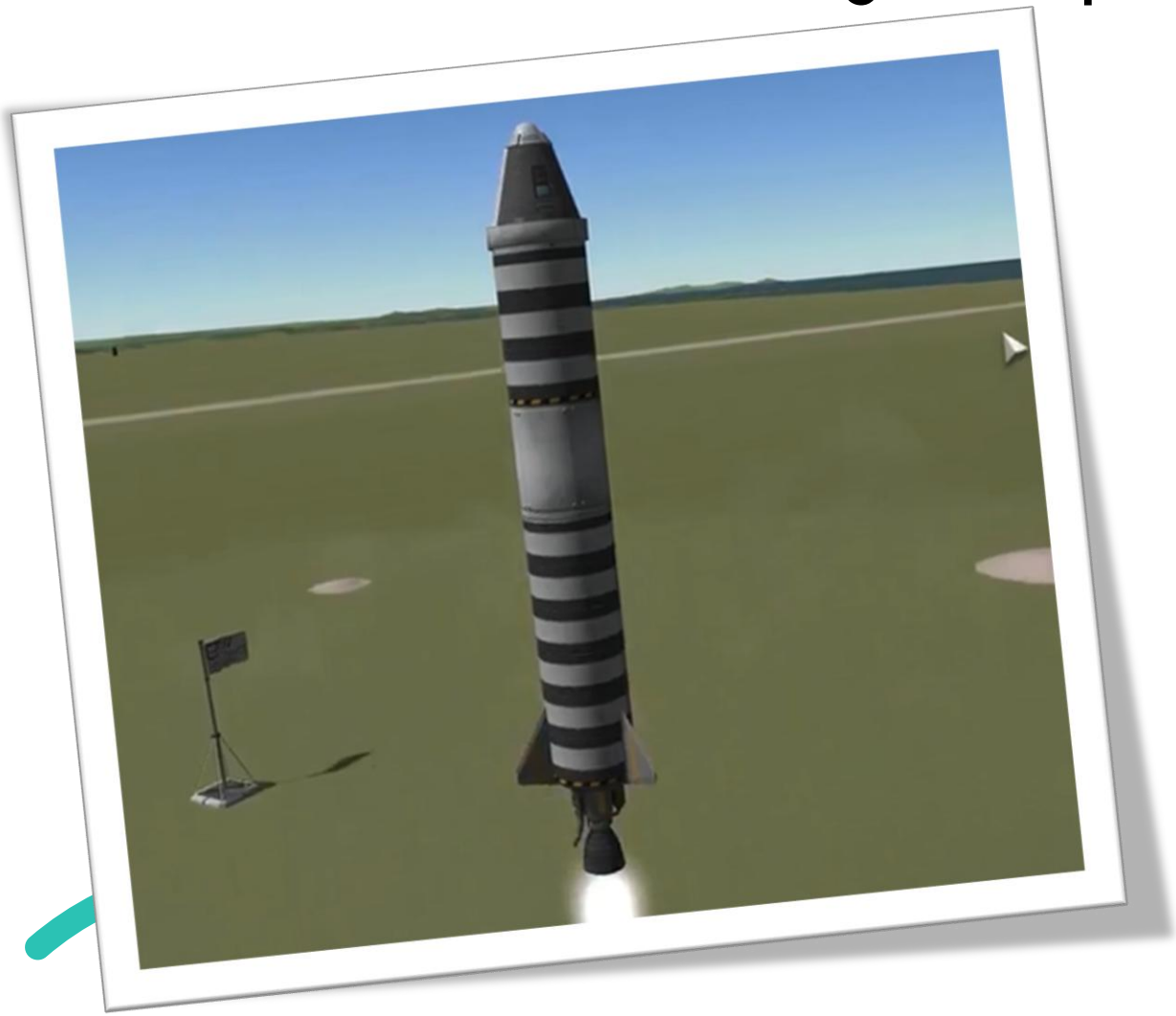

My contribution:

- Designed the outer structure and linking of the two stages of the rocket body.
- Brainstormed on environment friendly propellant selection, tracking the carbon footprint.
- Worked on the propulsion system of the project, thrust calibration for stage separation, change in velocities, mass estimations etc.

For more details: Team Gargantua

Winches, Hoists, Hydraulic Pump Drives & accessories.

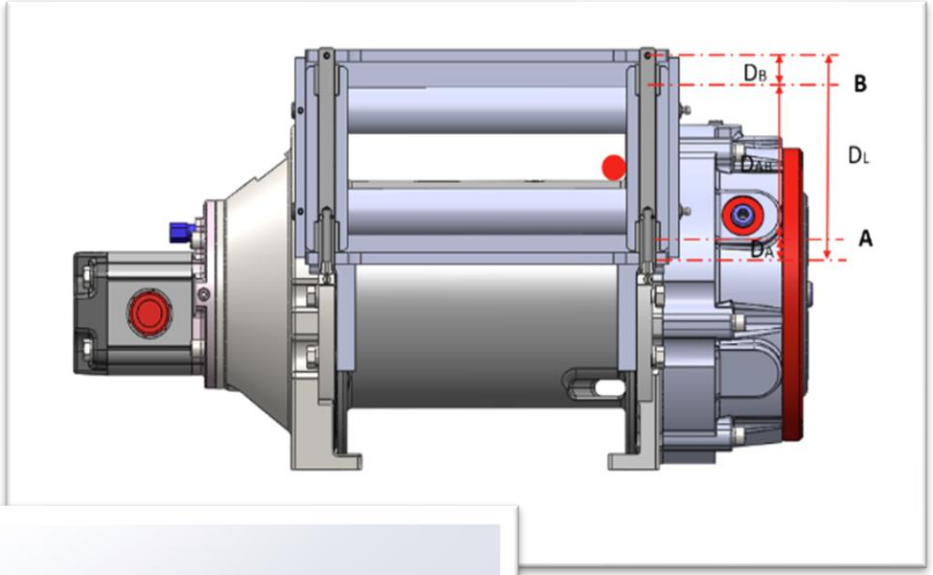

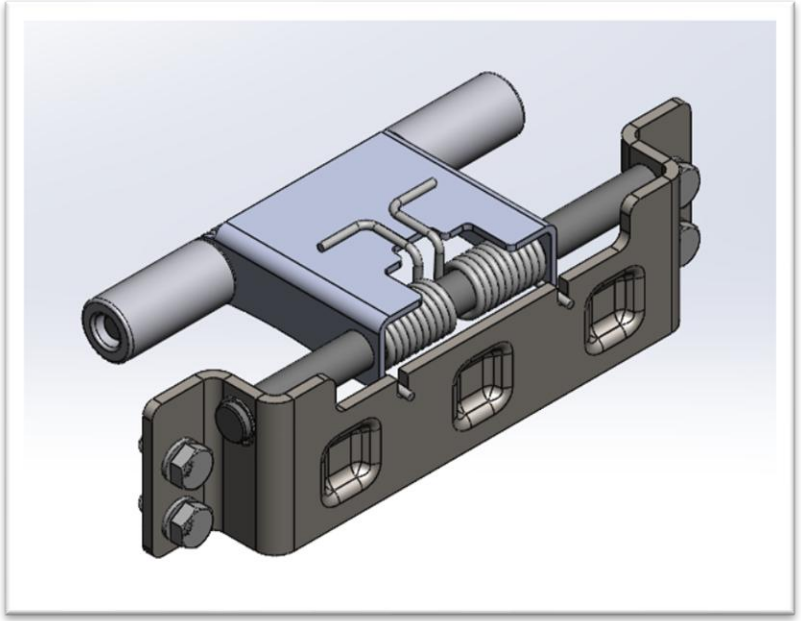

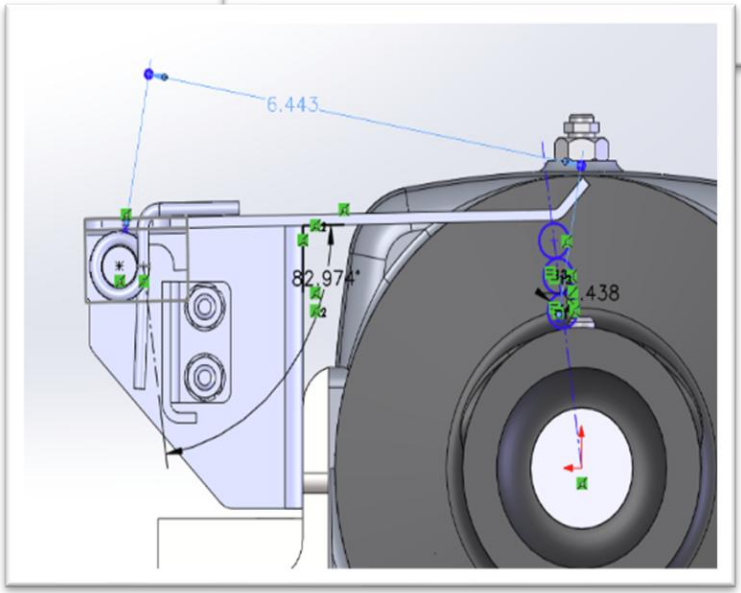

- Designed on Pneumatic and spring actuated Rope Tensioner for Winches and Hoists (NPD)
- Worked on performance improvements of winches through optimizing gear designs.
- Improved sustainability of existing Hydraulic Pump Drives by identifying hardware gaps.

S.No	Description	Symbol	Value	Unit
	Input			
1	Barrel diameter	D	3.5	in
2	Rope diameter	d	0.44	in
3	Layer	N	1	
4	Distace b/w barrel centre to roller centre-Horizontal	DH	5.344	
5	Distace b/w barrel centre to roller centre-Vertical	DV	2.844	
	Calculation			
1	Rope layer diameter		3.937	in
2	Rope layer radius		1.9685	in
3			0.88	in
		tan Θ	0.16	
	Rope departure angle from Barrel	Θ	0.16	
			9.30	deg

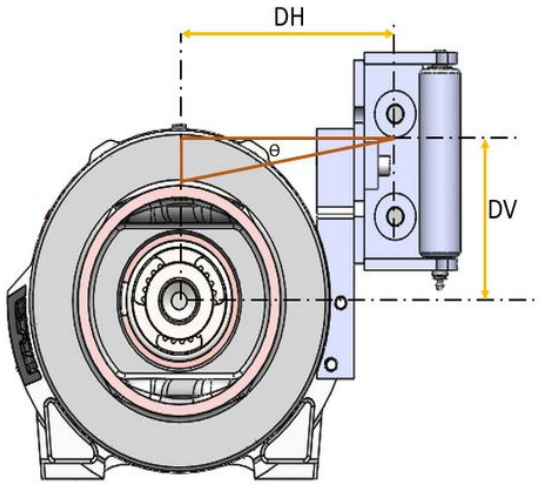

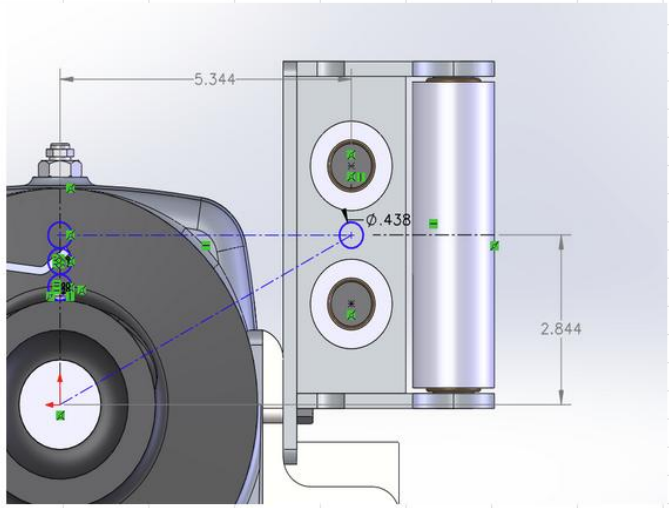

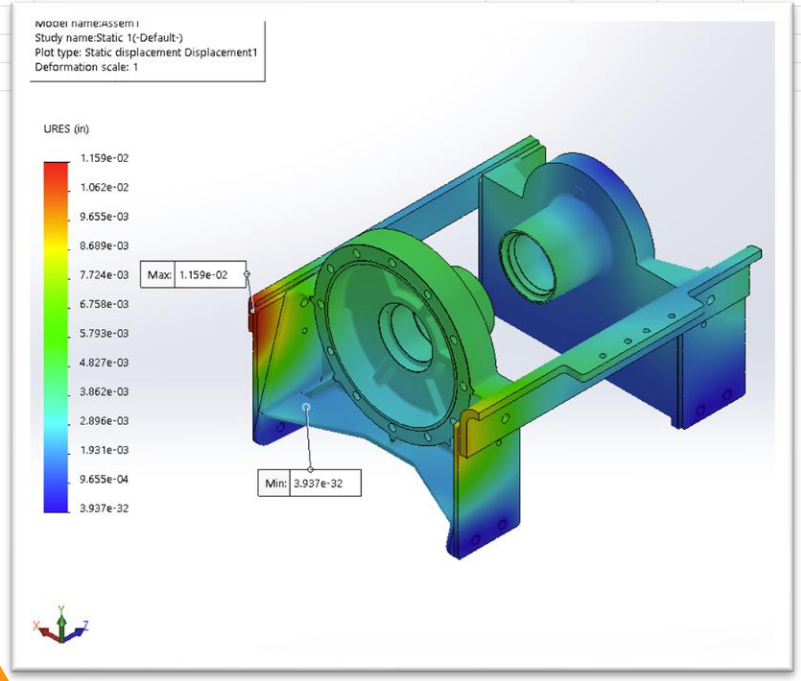

- Modified and performed FEA analysis for failure points on the structure as per client's requirement.
- Identified product and process improvements (VAVE) and escalated them to stake holders.

CAD, 3D Prints & assemblies - Motiv Design

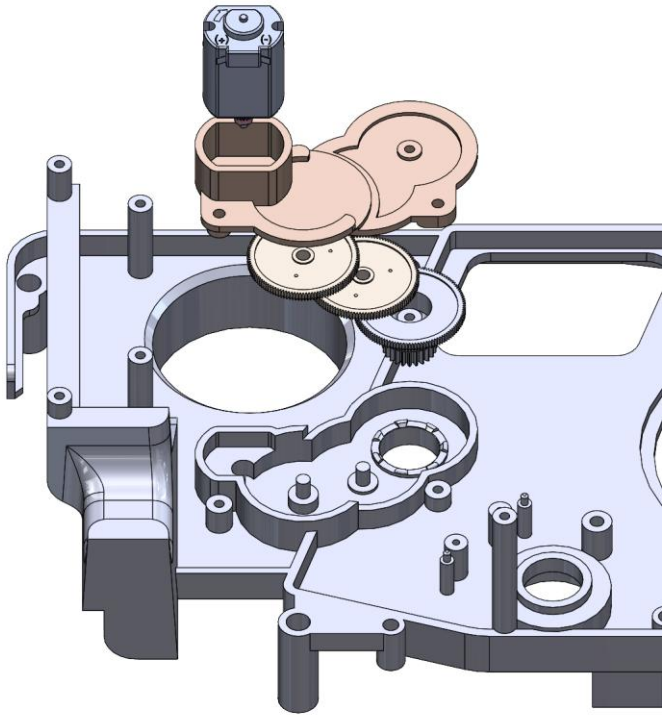

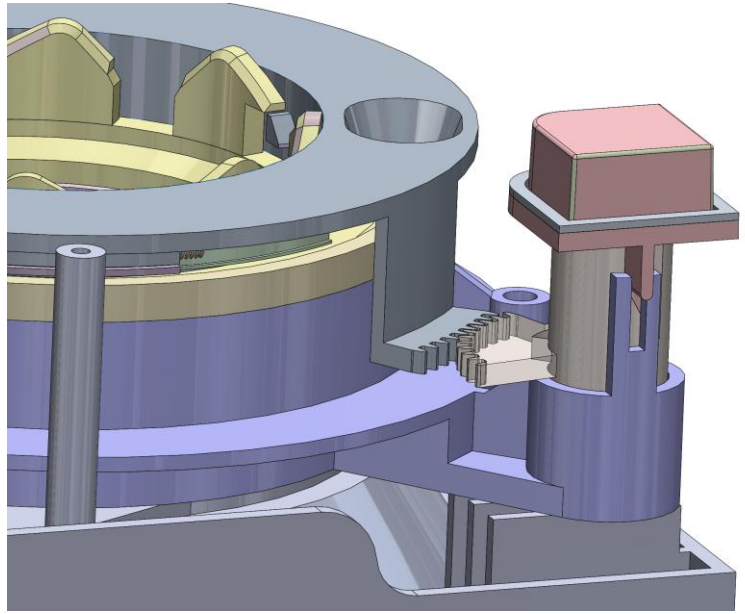

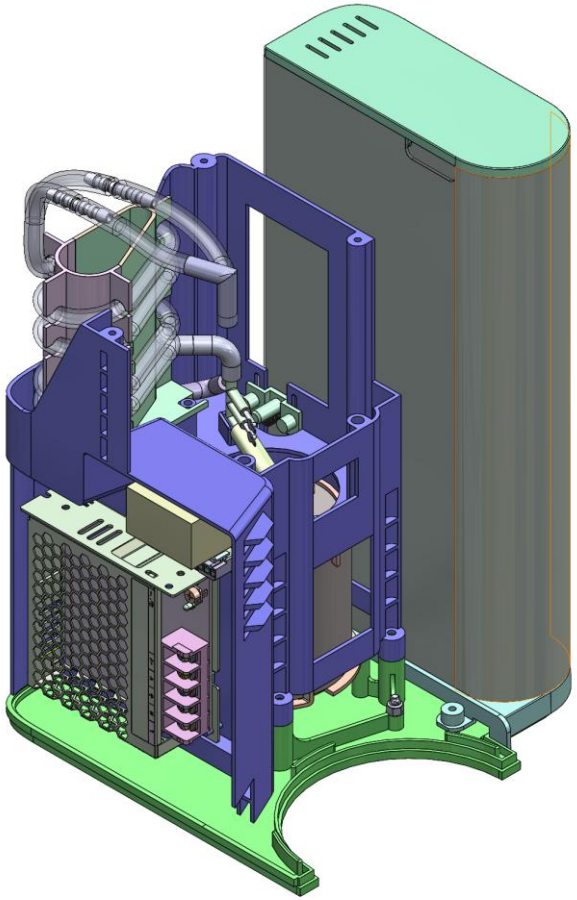

CAD, 3D Prints & assemblies - Motiv Design

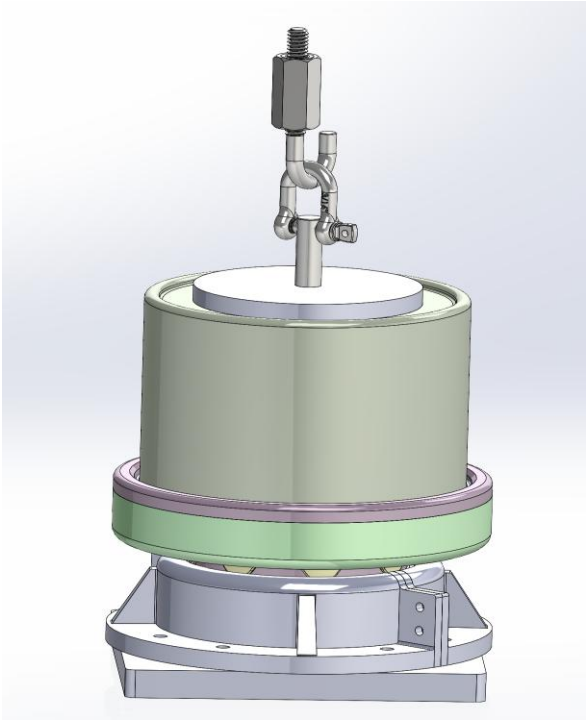

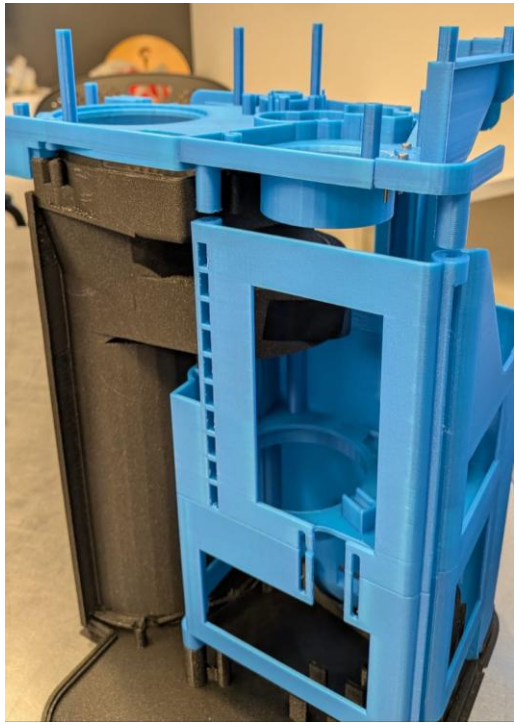

3D printed, assembled and tested apparatus/prototypes for performance, sound levels and functionality.

Range Sensitivity and Detection

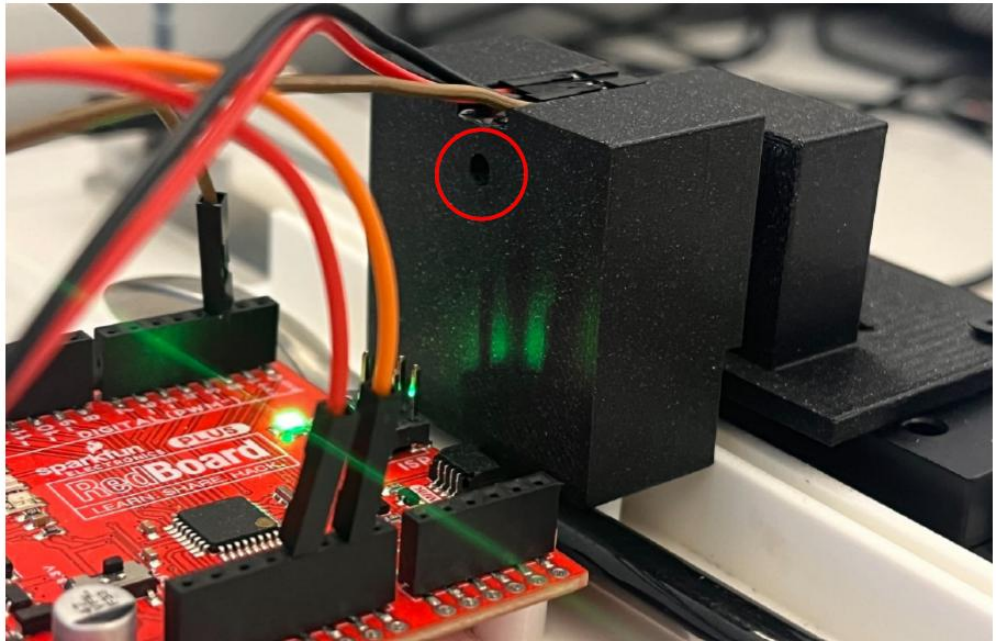

Designed Hall Effect sensor systems for water level detection and grinder identification, achieving **100% detection accuracy** through rigorous Arduino-based validation and testing.

Main Components:
1. Hall effect Sensors.
2. Magnets.
3. Arduino Board.
4. 3D printed mounting brackets.

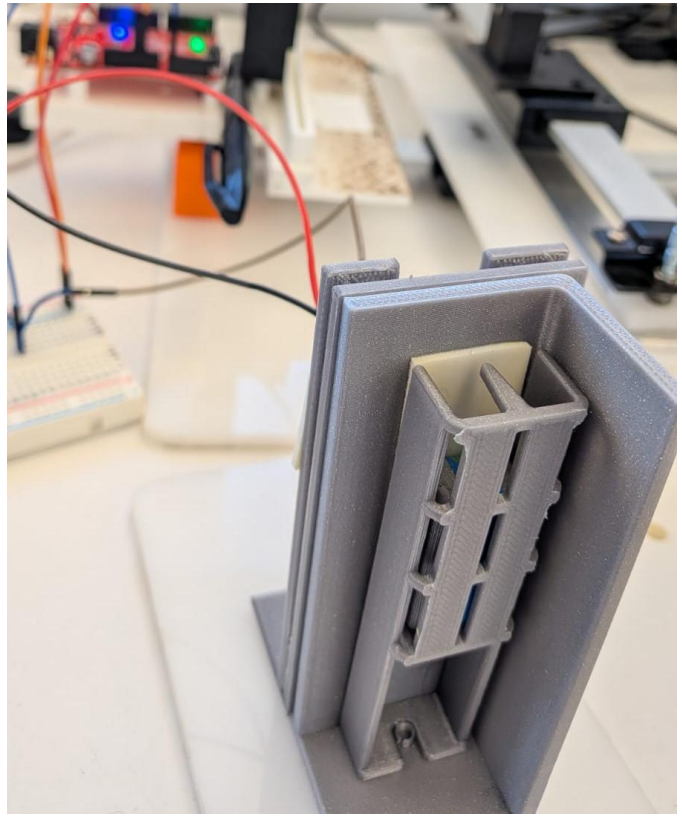

Range Sensitivity and Detection

Float

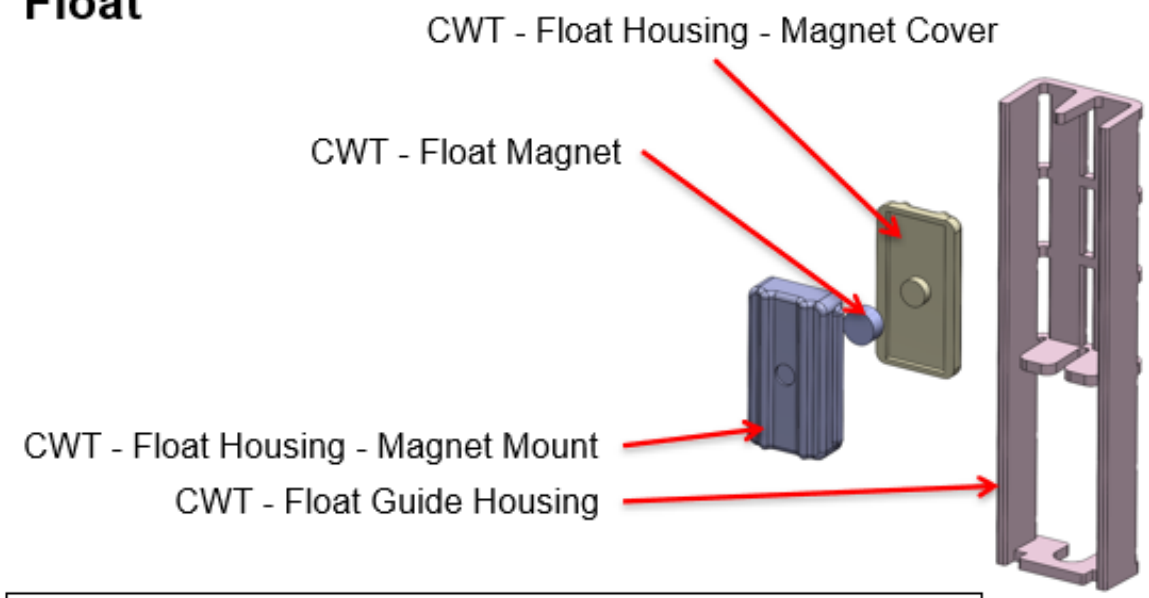

Note: Magnet Cover and Magnet Mount are sonic welded

Multi-Sensor Grinder Identifier

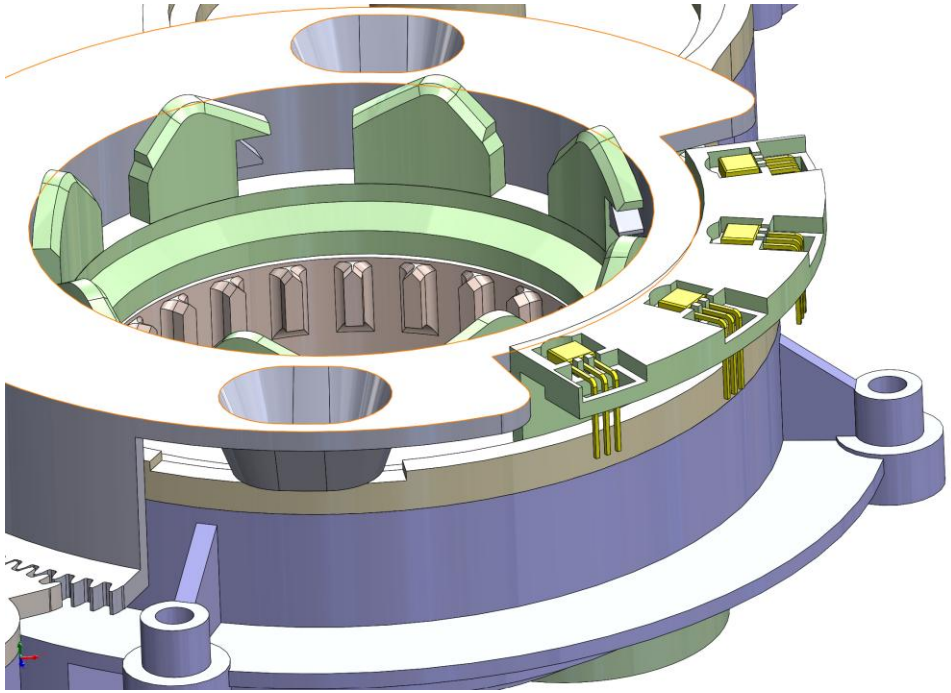

Cold Water Plunge – Control Unit Prototype

- Initially started with Jump wires, breadboards, RedBoard, Relays, Rotary switch and other electronic components.
- Rotary switch was used to set the required water temperature, thermocouple to sense the current water temperature and relays to control the flow of water inside and outside the system.

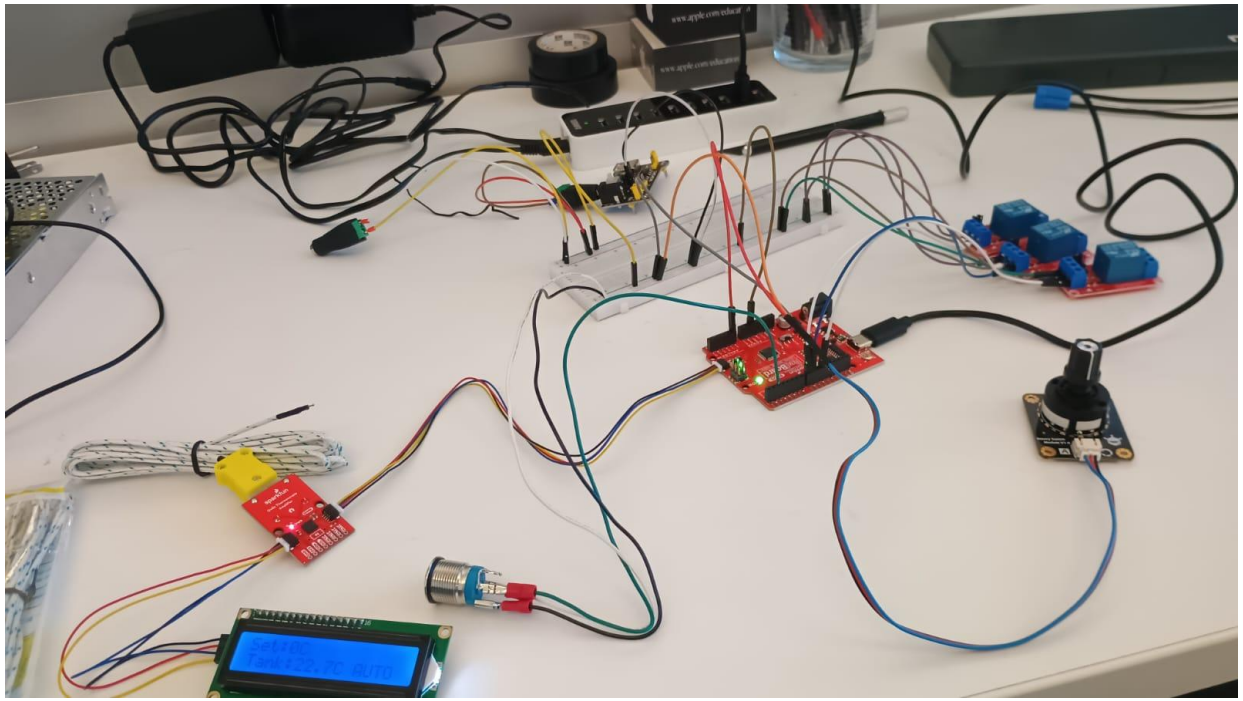

Fully functional and scaled Control Unit

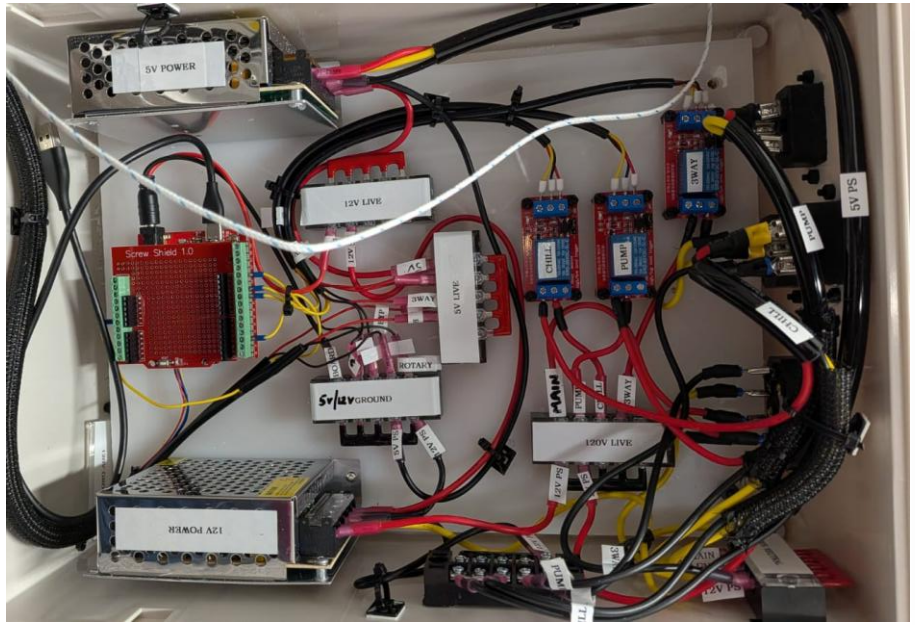

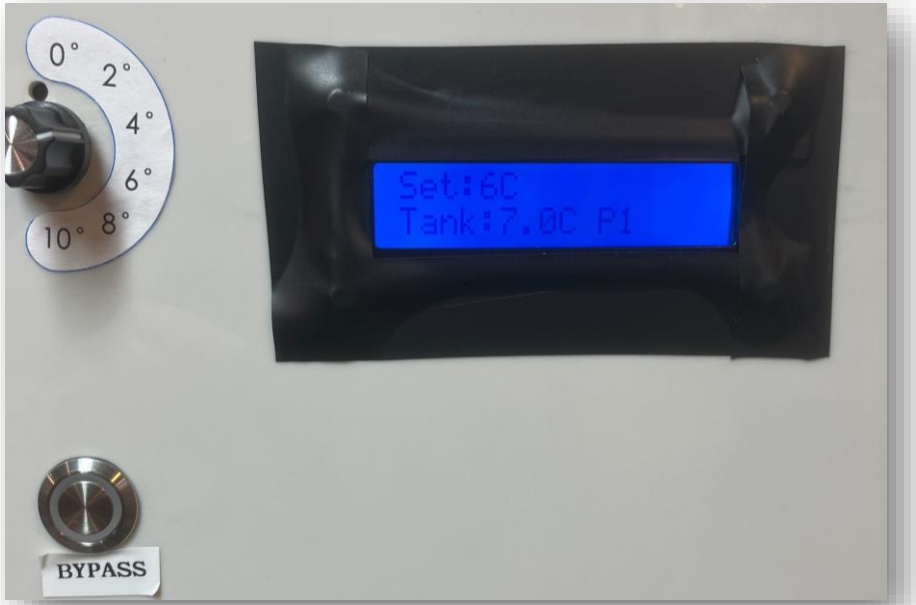

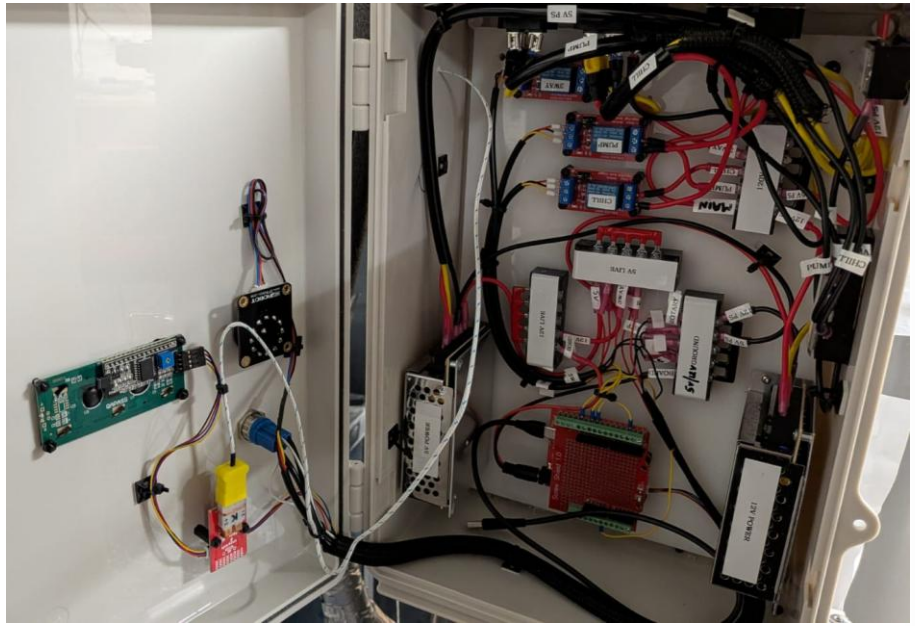

Logic Flow

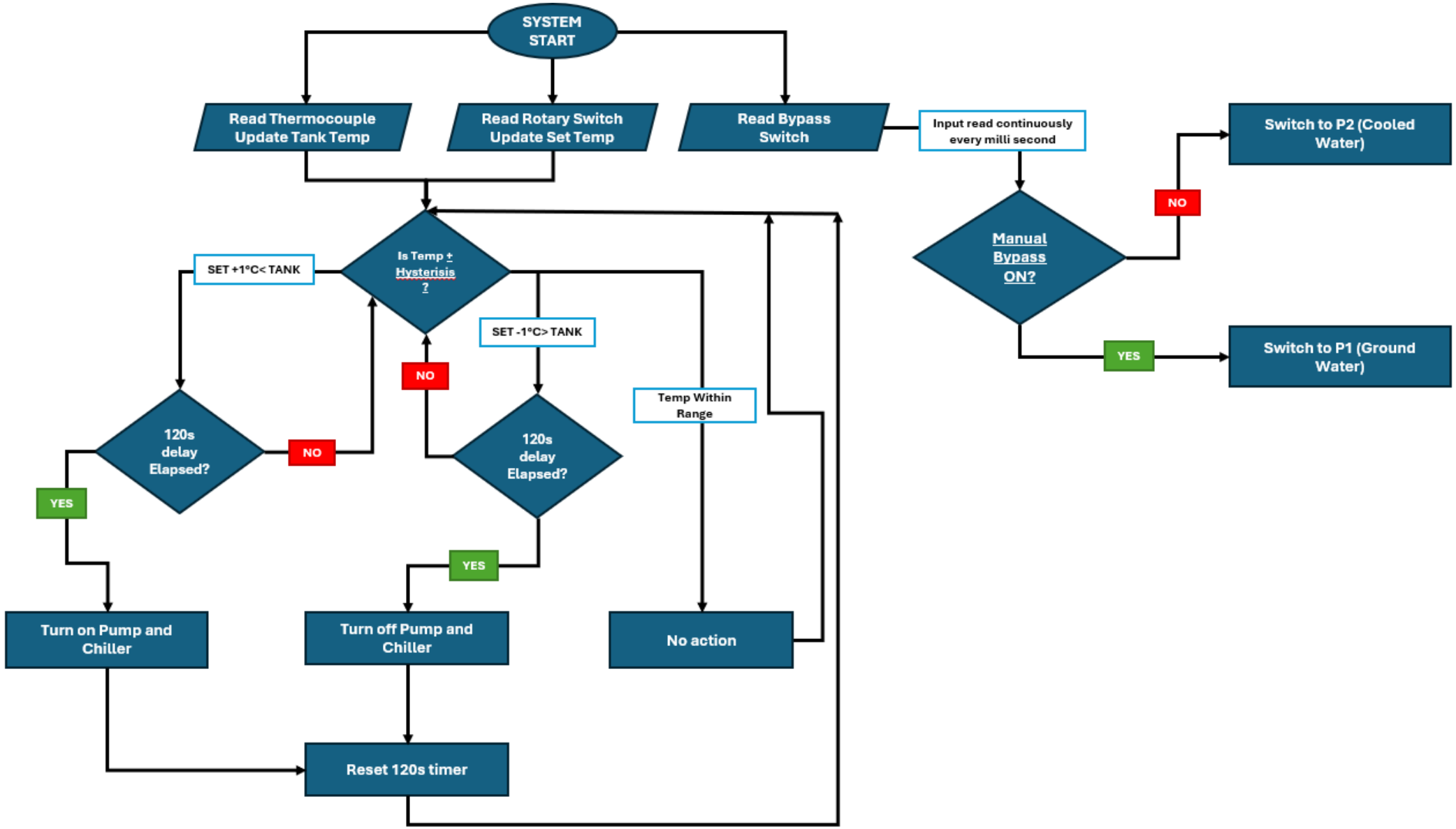
SYSTEM START
Read Thermocouple Update Tank Temp
Read Rotary Switch Update Set Temp
Read Bypass Switch
Input read continuously every milli second
Switch to P2 (Cooled Water)
NO
Manual Bypass ON?
YES
Switch to P1 (Ground Water)
Is Temp ± Hysterisis ?
SET +1°C< TANK
SET -1°C> TANK
NO
Temp Within Range
120s delay Elapsed?
NO
YES
120s delay Elapsed?
YES
Turn on Pump and Chiller
Turn off Pump and Chiller
No action
Reset 120s timer

Certification

coursera

4 Courses

Six Sigma and the Organization (Advanced)

Six Sigma Advanced Define and Measure Phases

Six Sigma Advanced Analyze Phase

Six Sigma Advanced Improve and Control Phases

KENNESAW STATE UNIVERSITY

Mar 28, 2025

Pooja Ramesh

has successfully completed the online, non-credit Specialization

Six Sigma Green Belt

This specialization is for you if you are looking to learn more about Six Sigma or refresh your knowledge of the more advanced components of Six Sigma and Lean. Six Sigma skills are widely sought by employers both nationally and internationally. These skills have been proven to help improve business processes, performance, and quality assurance. In this specialization, you will learn proven principles and tools specific to six sigma and lean.

Dr. David Cook
Assistant Professor of Mechanical Engineering Technology
Department of Mechanical Engineering Technology
Kennesaw State University

Bill Bailey, PhD
Assistant Professor
Southern Polytechnic College of Engineering and Engineering Technology
Kennesaw State University

Christina R. Scherrer, PhD
Professor
Southern Polytechnic College of Engineering and Engineering Technology
Kennesaw State University

Gregory L. Wiles, Ph.D., P.E.
Interim Chair and Assistant Professor
Department of Systems & Industrial Engineering
Southern Polytechnic College of Engineering and Engineering Technology
Kennesaw State University

The online specialization named in this certificate may draw on material from courses taught on-campus, but the included courses are not equivalent to on-campus courses. Participation in this online specialization does not constitute enrollment at this university. This certificate does not confer a University grade, course credit or degree, and it does not verify the identity of the learner.

Verify this certificate at:
https://coursera.org/verify/specialization/TOV86E6W7CC6

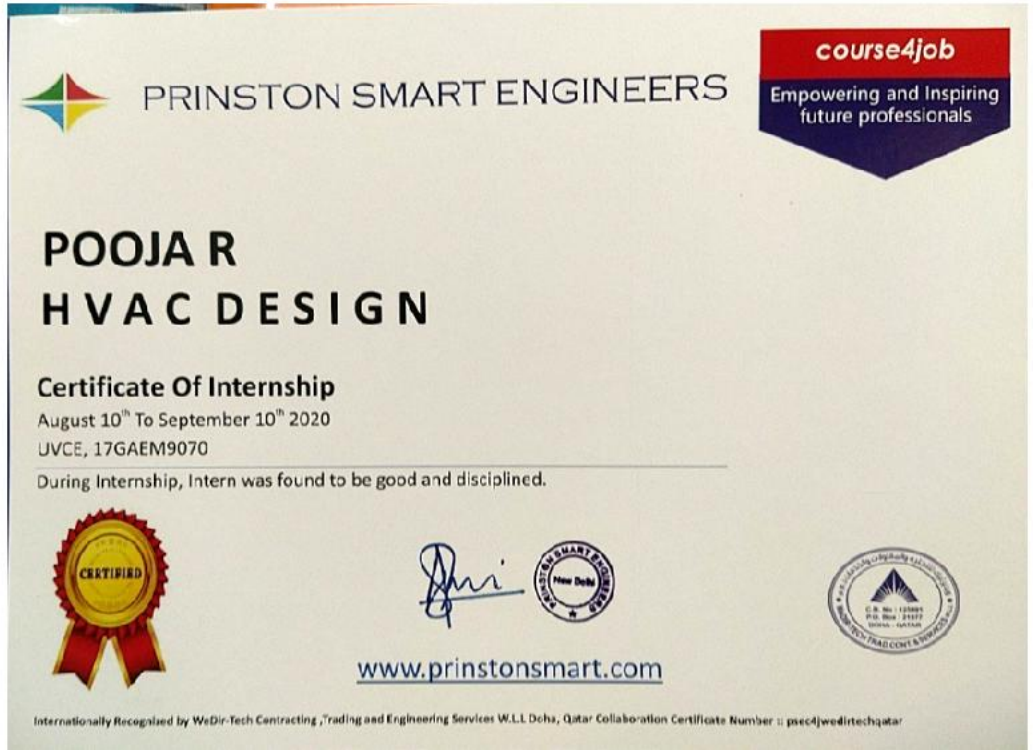

PRINSTON SMART ENGINEERS

course4job
Empowering and Inspiring future professionals

POOJA R
HVAC DESIGN

Certificate Of Internship
August 10th To September 10th 2020
UVCE, 17GAEM9070

During Internship, Intern was found to be good and disciplined.

CERTIFIED

www.prinstonsmart.com

Internationally Recognized by WeDir-Tech Contracting ,Trading and Engineering Services W.L.L Doha, Qatar Collaboration Certificate Number :: psec4jwedirtechqatar

Thank you

Pooja Ramesh

617-888-6421

ramesh.poo@northeastern.edu