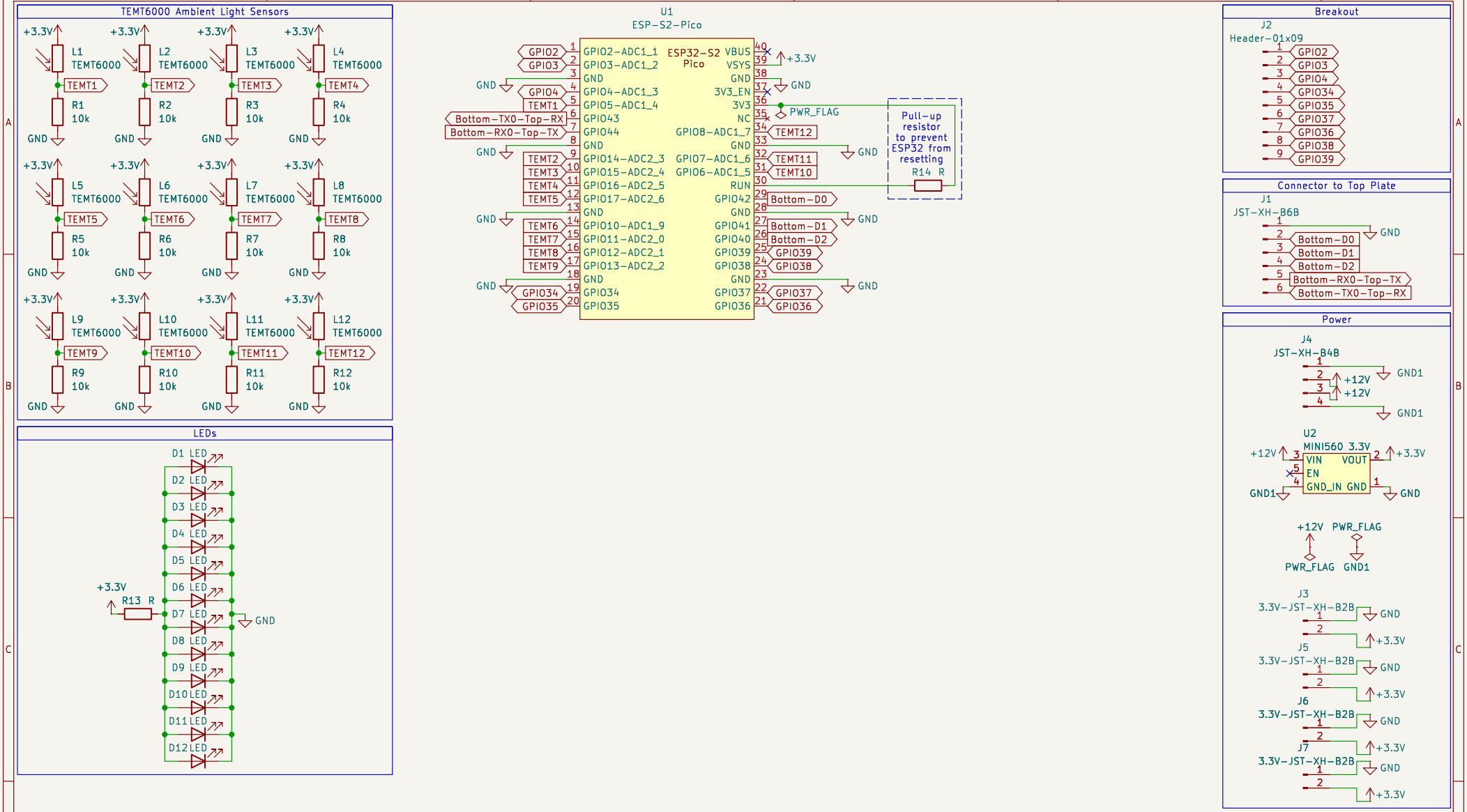

RoboCup Junior Soccer Open 2024

Zhou Yikun & Zachary Ang

Sheet: /

File: bottom.kicad_sch

Title: Bottom Plate

Size: A4	Date: 2024-06-08	**Rev: 1.4.0**
KiCad E.D.A. 8.0.1		Id: 1/1