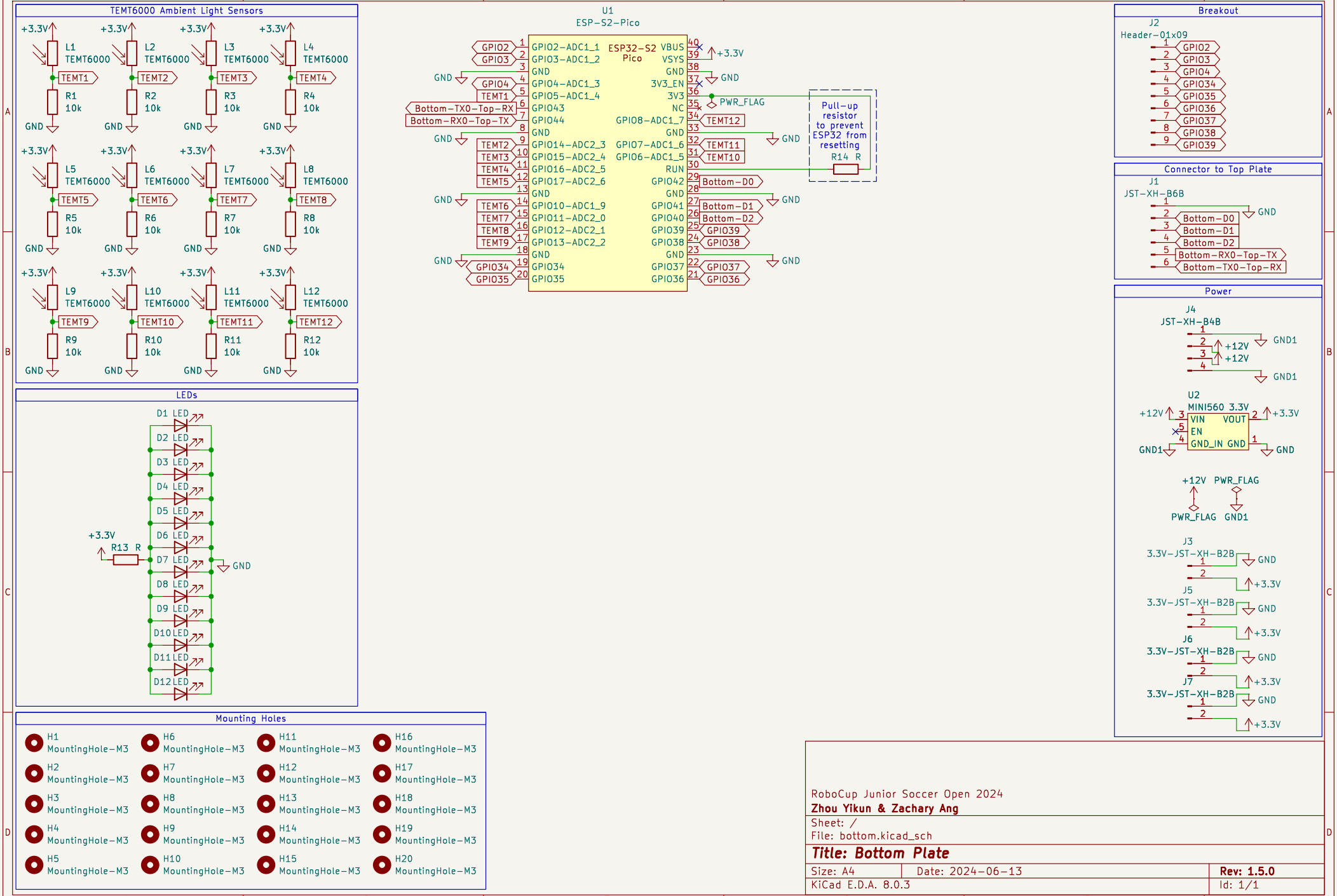
TEMT6000 Ambient Light Sensors
L1 TEMT6000 TEMT1 R1 10k
L2 TEMT6000 TEMT2 R2 10k
L3 TEMT6000 TEMT3 R3 10k
L4 TEMT6000 TEMT4 R4 10k
L5 TEMT6000 TEMT5 R5 10k
L6 TEMT6000 TEMT6 R6 10k
L7 TEMT6000 TEMT7 R7 10k
L8 TEMT6000 TEMT8 R8 10k
L9 TEMT6000 TEMT9 R9 10k
L10 TEMT6000 TEMT10 R10 10k
L11 TEMT6000 TEMT11 R11 10k
L12 TEMT6000 TEMT12 R12 10k
+3.3V
GND
U1
ESP-S2-Pico
ESP32-S2 Pico
GPIO2-ADC1_1
GPIO3-ADC1_2
GPIO4-ADC1_3
GPIO5-ADC1_4
GPIO43
GPIO44
GPIO14-ADC2_3
GPIO15-ADC2_4
GPIO16-ADC2_5
GPIO17-ADC2_6
GPIO10-ADC1_9
GPIO11-ADC2_0
GPIO12-ADC2_1
GPIO13-ADC2_2
GPIO34
GPIO35
VBUS
VSYS
3V3_EN
3V3
NC
GPIO8-ADC1_7
GPIO7-ADC1_6
GPIO6-ADC1_5
RUN
GPIO42
GPIO41
GPIO40
GPIO39
GPIO38
GPIO37
GPIO36
Bottom-TX0-Top-RX
Bottom-RX0-Top-TX
Bottom-D0
Bottom-D1
Bottom-D2
PWR_FLAG
Pull-up resistor to prevent ESP32 from resetting
R14 R
Breakout
J2
Header-01x09
Connector to Top Plate
J1
JST-XH-B6B
Power
J4
JST-XH-B4B
GND1
+12V
U2
MINI560 3.3V
VIN VOUT
EN
GND_IN GND
J3
3.3V-JST-XH-B2B
J5
J6
J7
LEDs
D1 LED
D2 LED
D3 LED
D4 LED
D5 LED
D6 LED
D7 LED
D8 LED
D9 LED
D10 LED
D11 LED
D12 LED
R13 R
Mounting Holes
H1 MountingHole-M3
H2 MountingHole-M3
H3 MountingHole-M3
H4 MountingHole-M3
H5 MountingHole-M3
H6 MountingHole-M3
H7 MountingHole-M3
H8 MountingHole-M3
H9 MountingHole-M3
H10 MountingHole-M3
H11 MountingHole-M3
H12 MountingHole-M3
H13 MountingHole-M3
H14 MountingHole-M3
H15 MountingHole-M3
H16 MountingHole-M3
H17 MountingHole-M3
H18 MountingHole-M3
H19 MountingHole-M3
H20 MountingHole-M3
RoboCup Junior Soccer Open 2024
Zhou Yikun & Zachary Ang
Sheet: /
File: bottom.kicad_sch
Title: Bottom Plate
Size: A4
Date: 2024-06-13
Rev: 1.5.0
KiCad E.D.A. 8.0.3
Id: 1/1