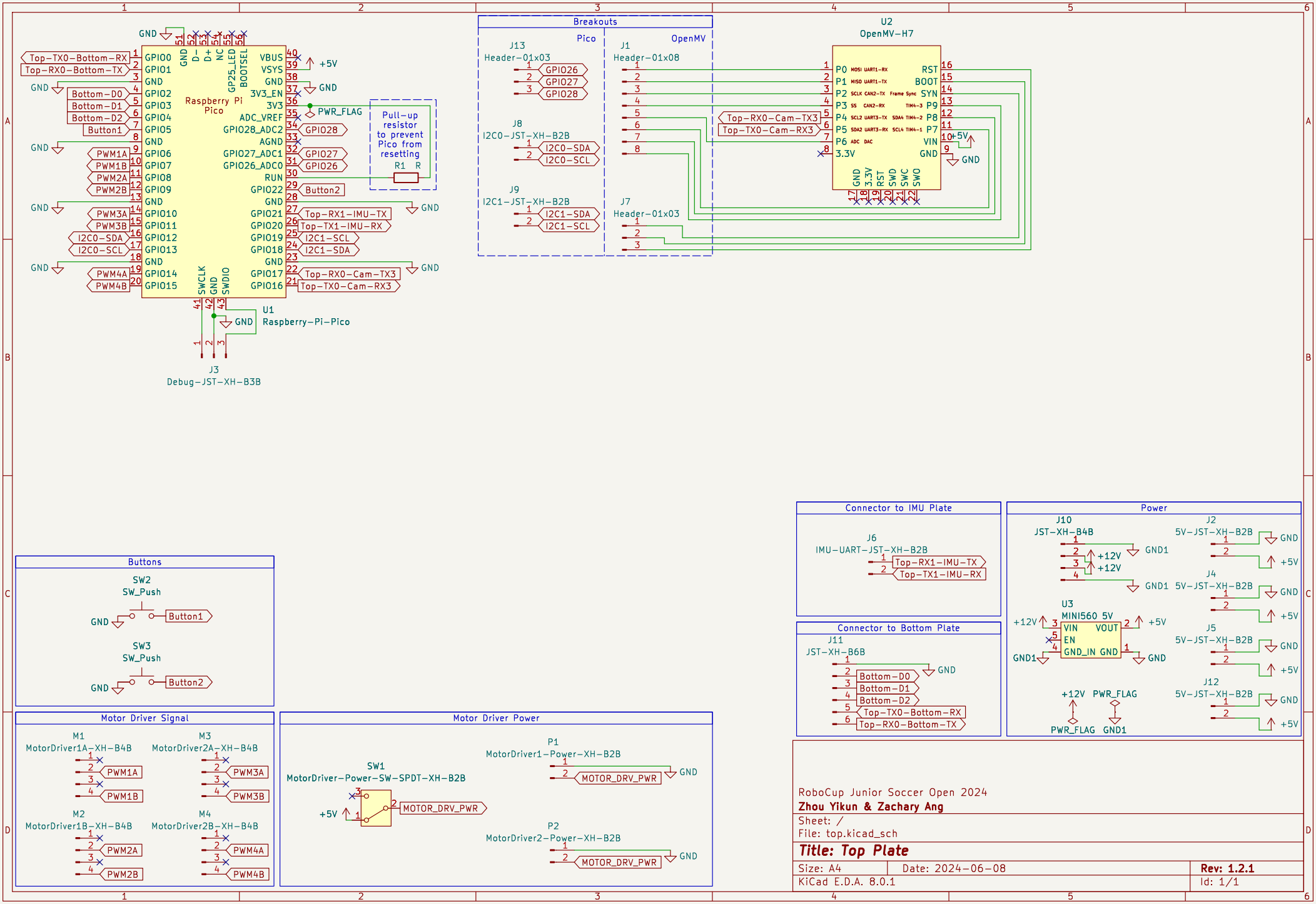
U1
Raspberry-Pi-Pico
Raspberry Pi Pico
J3
Debug-JST-XH-B3B
Pull-up resistor to prevent Pico from resetting
R1
Breakouts
Pico
OpenMV
J13
Header-01x03
J8
I2C0-JST-XH-B2B
J9
I2C1-JST-XH-B2B
J1
Header-01x08
J7
Header-01x03
U2
OpenMV-H7
Buttons
SW2
SW_Push
SW3
SW_Push
Motor Driver Signal
M1
MotorDriver1A-XH-B4B
M2
MotorDriver1B-XH-B4B
M3
MotorDriver2A-XH-B4B
M4
MotorDriver2B-XH-B4B
Motor Driver Power
SW1
MotorDriver-Power-SW-SPDT-XH-B2B
P1
MotorDriver1-Power-XH-B2B
P2
MotorDriver2-Power-XH-B2B
Connector to IMU Plate
J6
IMU-UART-JST-XH-B2B
Connector to Bottom Plate
J11
JST-XH-B6B
Power
J10
JST-XH-B4B
U3
MINI560 5V
J2
5V-JST-XH-B2B
J4
5V-JST-XH-B2B
J5
5V-JST-XH-B2B
J12
5V-JST-XH-B2B
RoboCup Junior Soccer Open 2024
Zhou Yikun & Zachary Ang
Sheet: /
File: top.kicad_sch
Title: Top Plate
Size: A4
Date: 2024-06-08
Rev: 1.2.1
KiCad E.D.A. 8.0.1
Id: 1/1