HEATING AGGREGATE, MODEL BN 4

The Eberspächer BN 4 Heater will be installed either in the 6 or the 12 volt execution, according to the car's electrical system. Please pay the necessary attention when ordering spare parts.

See Supplements to Catalogue of Spare Parts 356 B, Group 7/13 aA and 7/13 A.

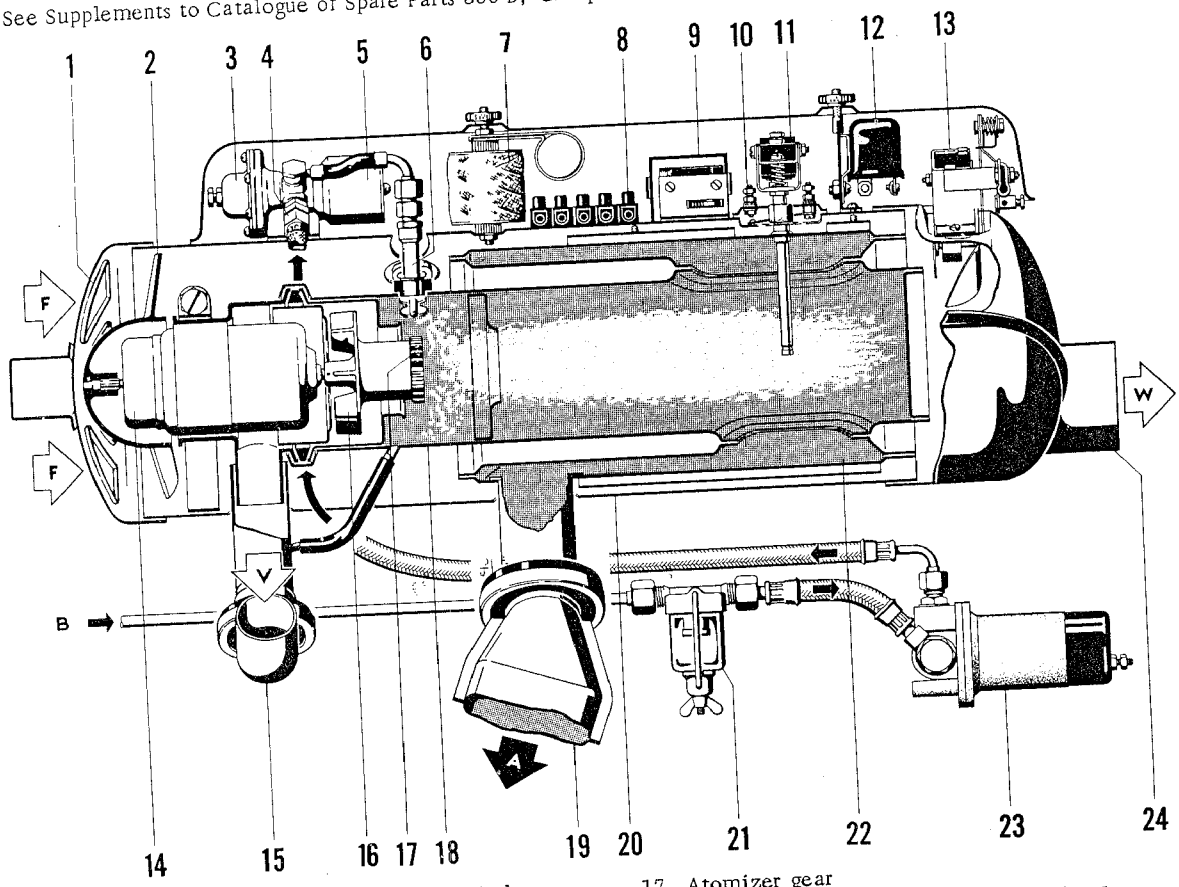

1. Cover plate
2. Fresh air fan
3. Pressure governor
4. Fuel line connection
5. Magnetic valve
6. Injector
7. Ignition coil
8. Cable connector
9. Safety switch
10. Overheat safety switch
11. Thermo switch
12. Relay
13. Governor switch
14. Electric motor
15. Air intake
16. Fan for burner
17. Atomizer gear
18. Combustion chamber
19. Exhaust pipe
20. Outer housing
21. Fuel filter
22. Heat exchanger
23. Fuel pump
24. Hot air discharge

Fig. 1

F = fresh air
W = hot air
V = combustion air
A = exhausts

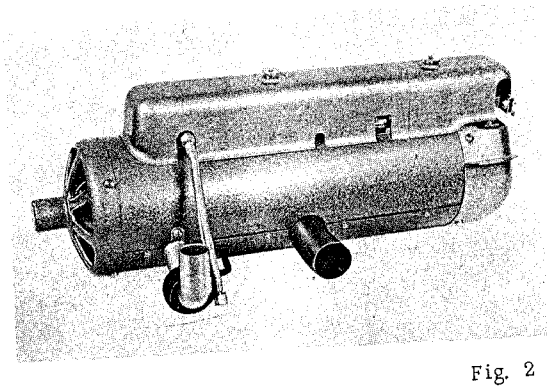

Fig. 2

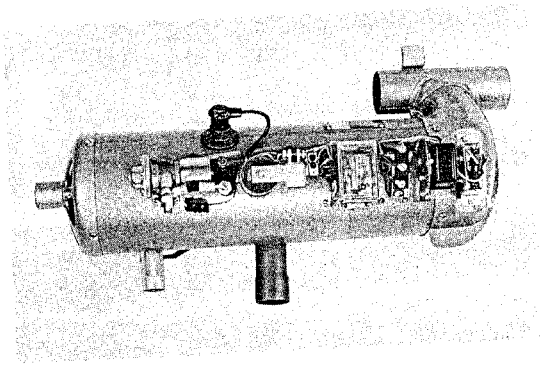

Fig. 3