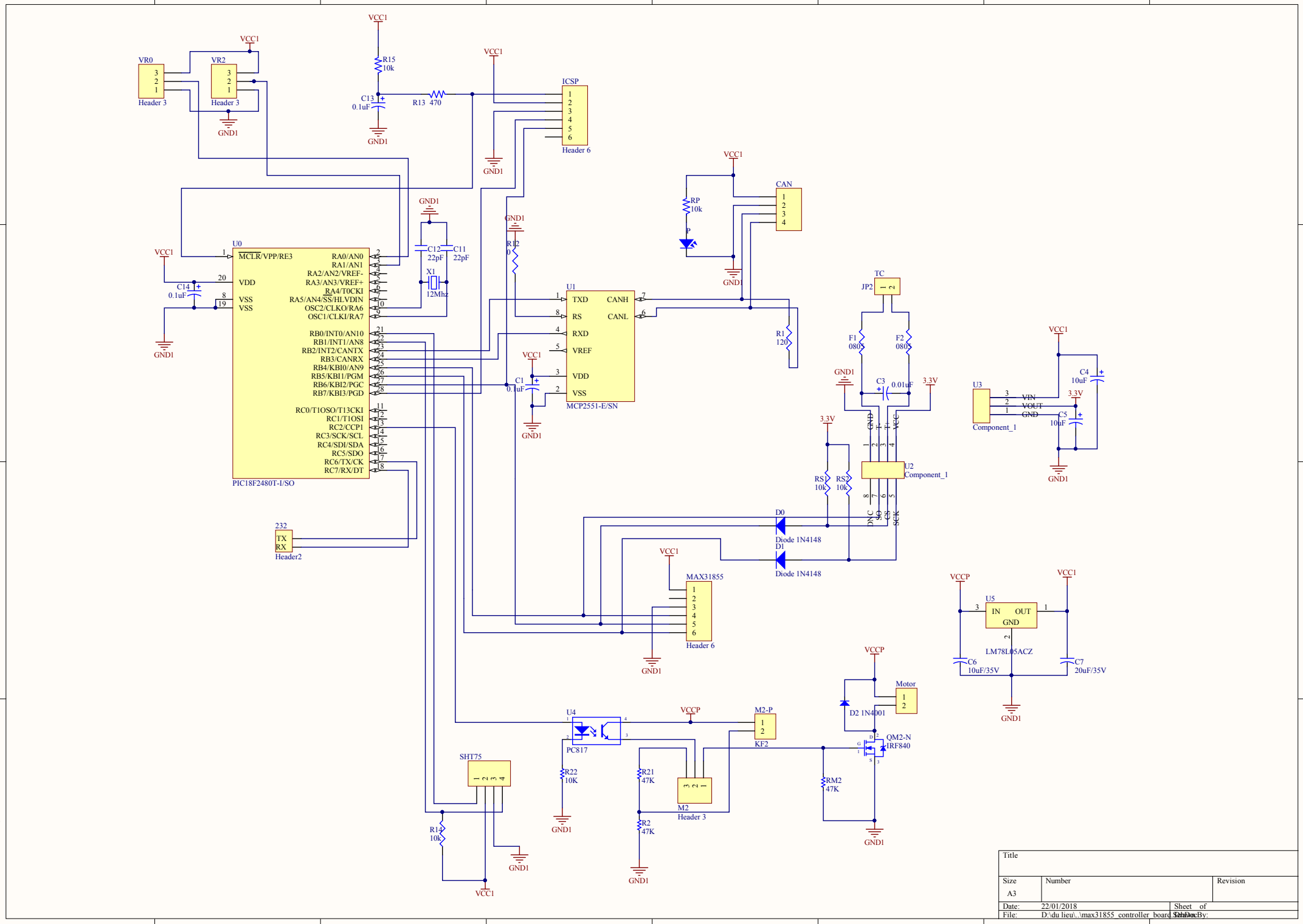

Title		
Size A3	Number	Revision
Date: 22/01/2018	Sheet of	
File: D:\du lieu\..\max31855_controller_board.SchDoc	Drawn By:	