ENGINEERING DRAWING

Prepared by
Dr. Samy Aly Hassan

2024 - 2025

LECTURE 6

- **Orthographic Projections of Inclined and Circular Surfaces**

Solved Examples
Example (1)

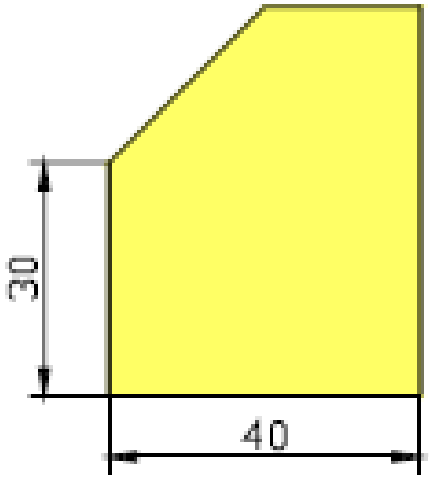

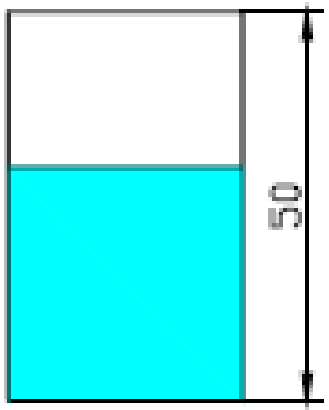

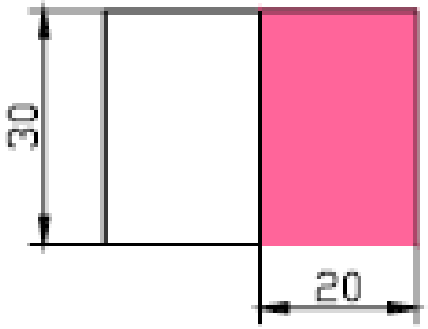

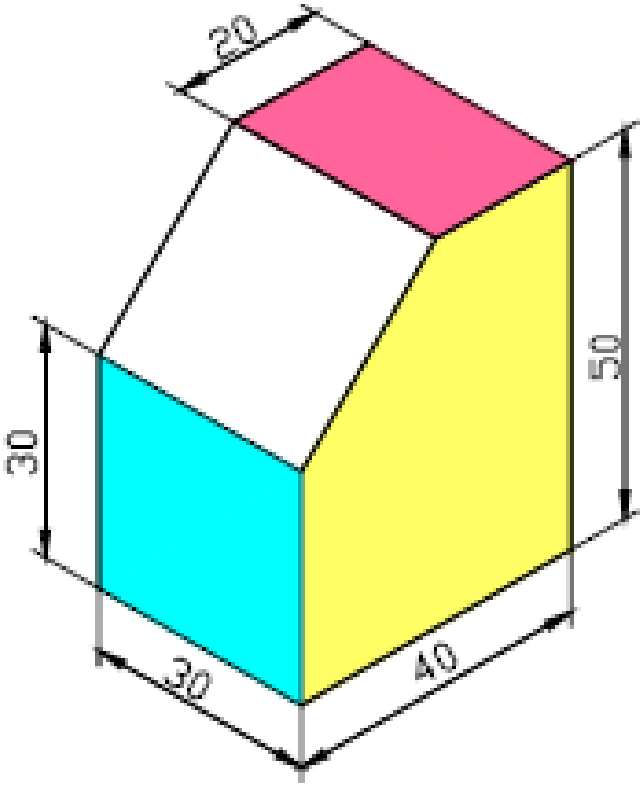

Example (2)

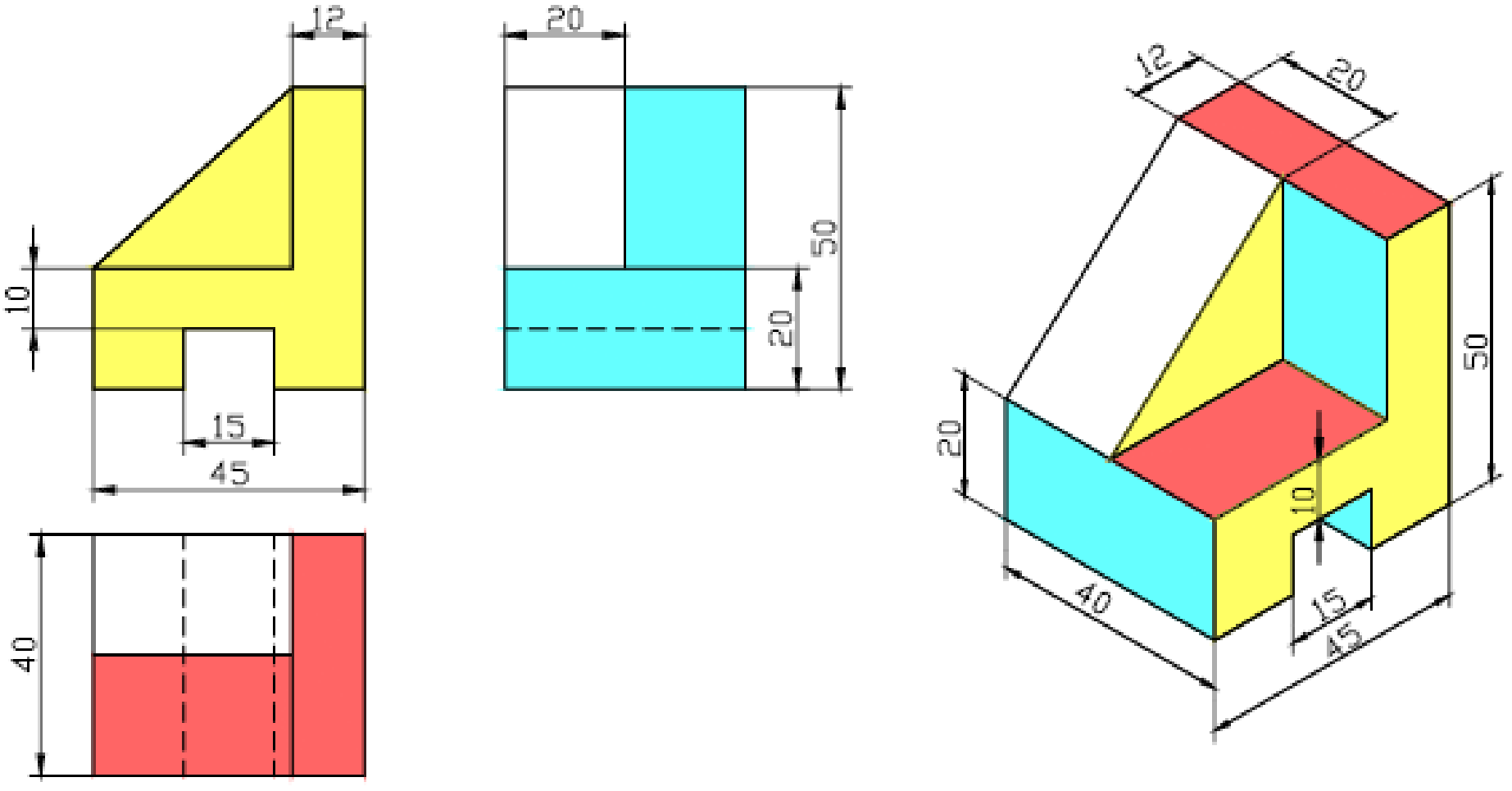

Example (3)

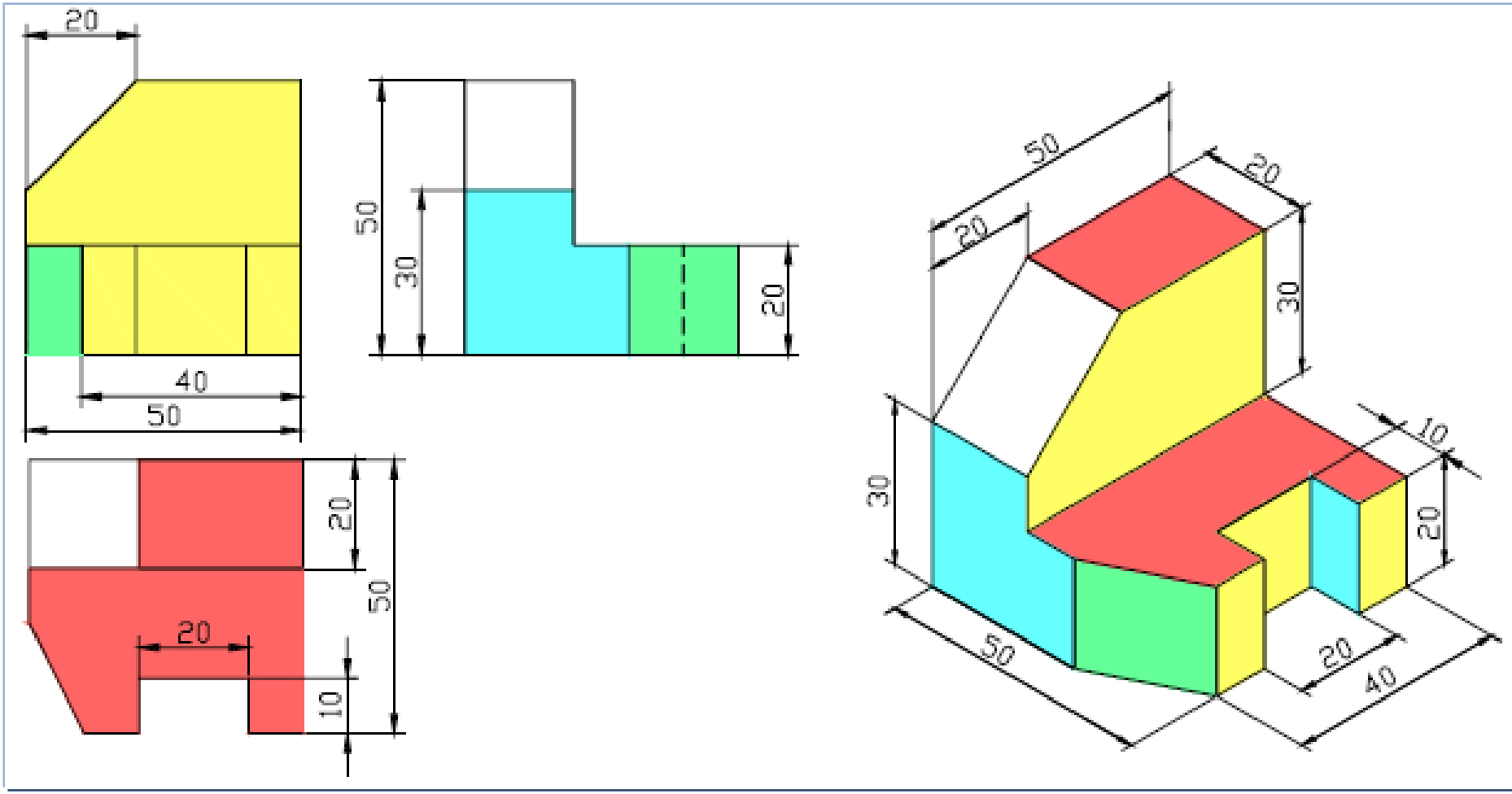

Example (4)

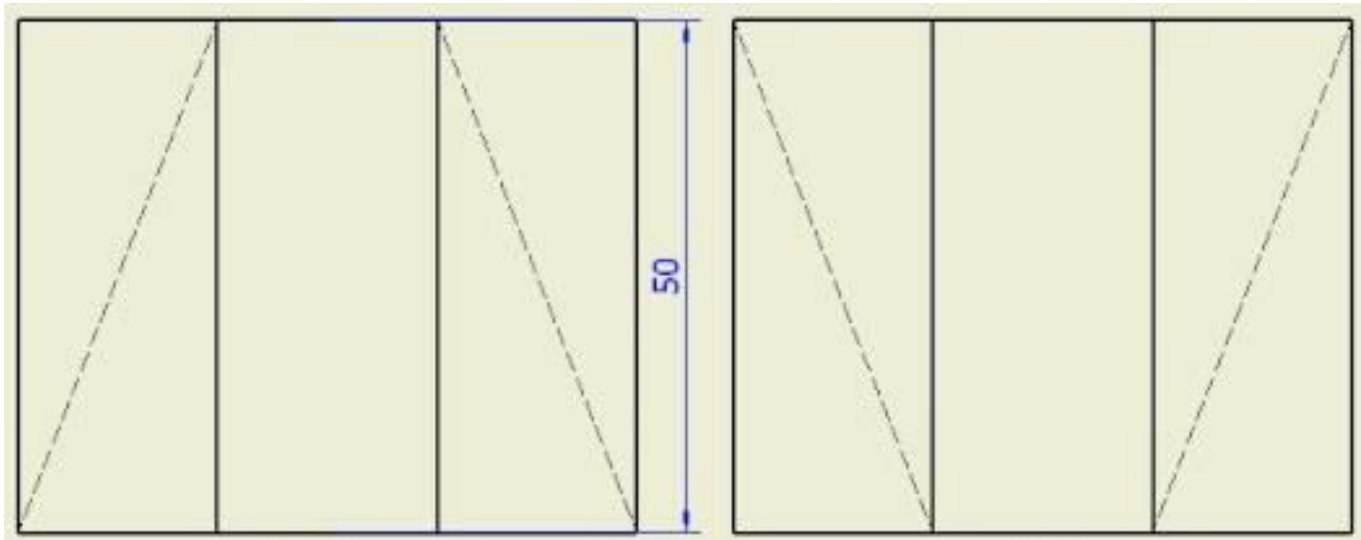

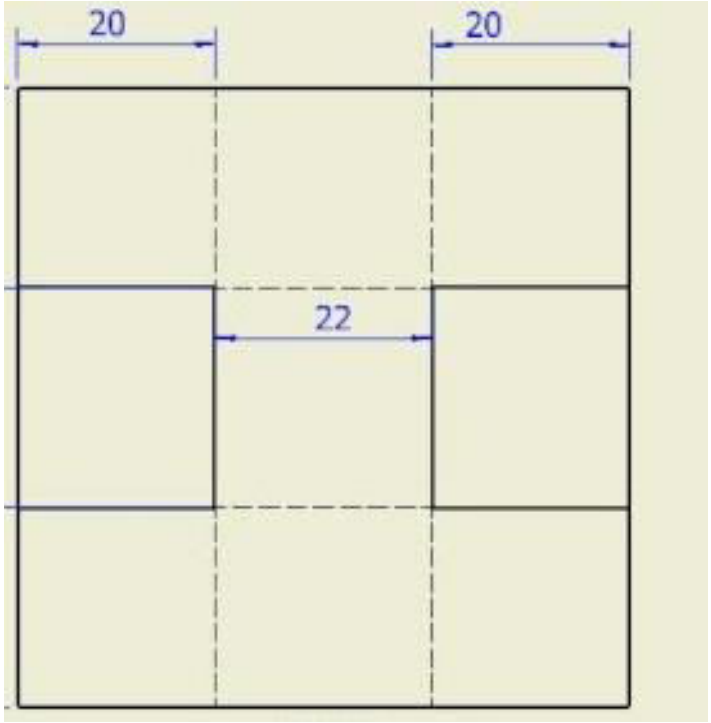

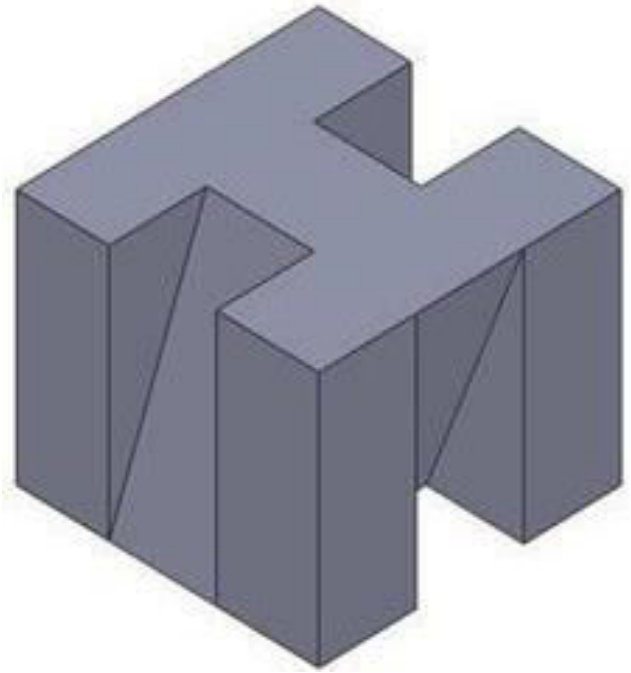

Example (5)

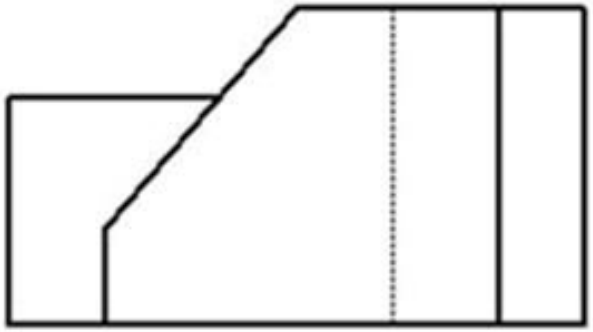

FRONT VIEW

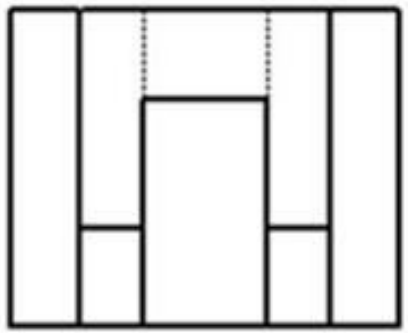

SIDE VIEW

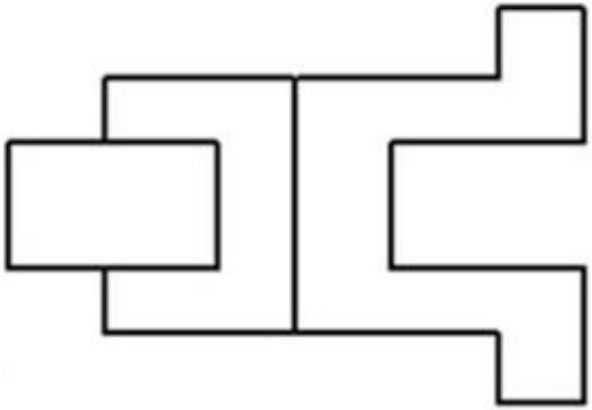

TOP VIEW

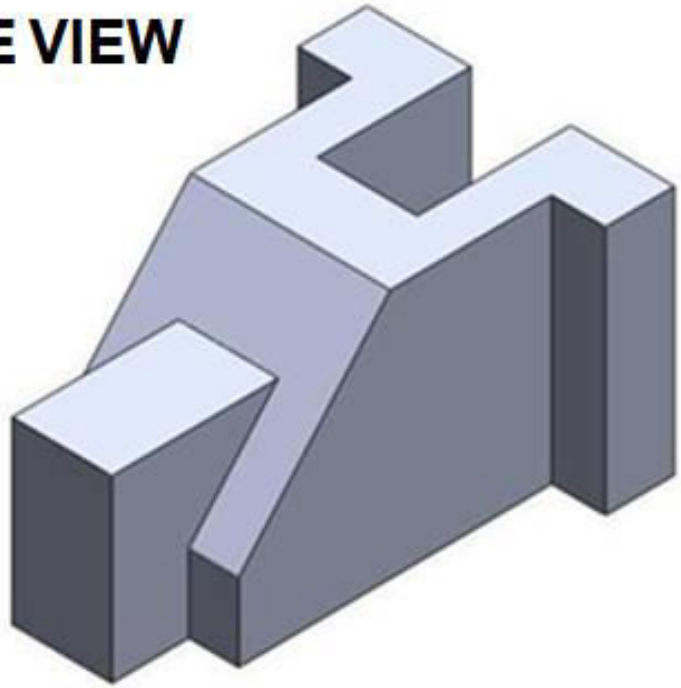

Example (6)

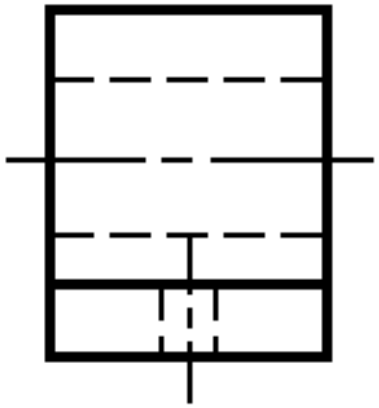

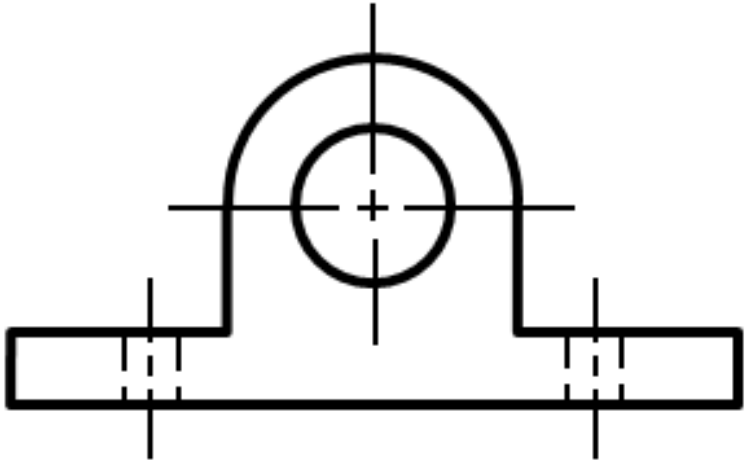

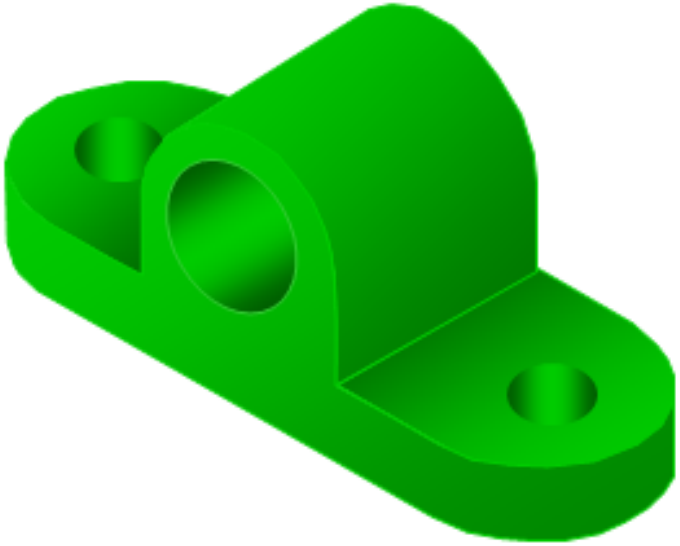

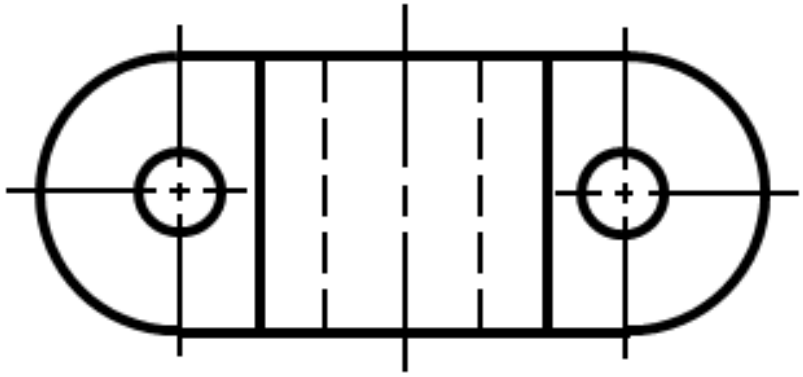

Example (7)

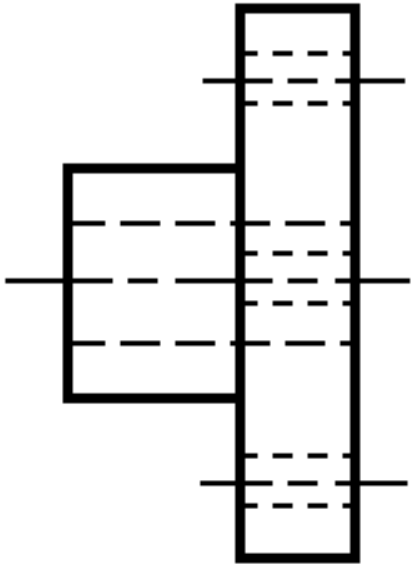

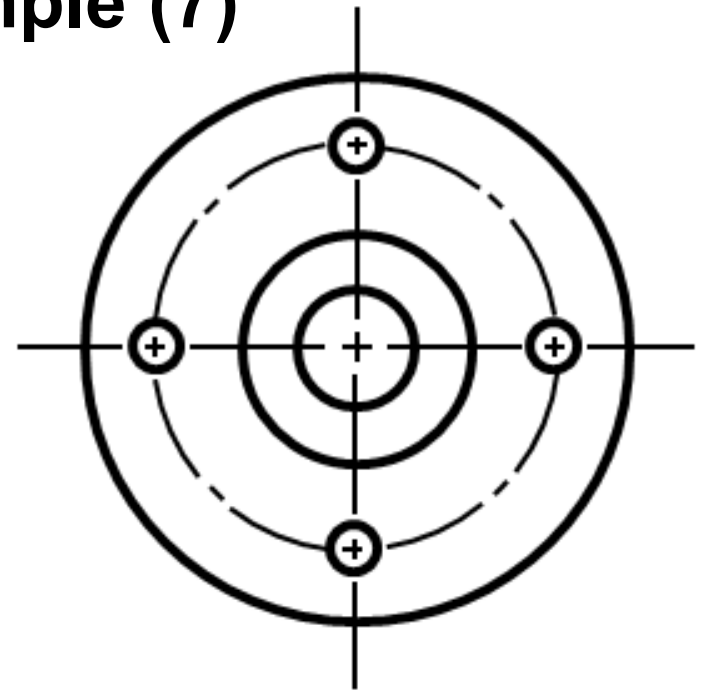

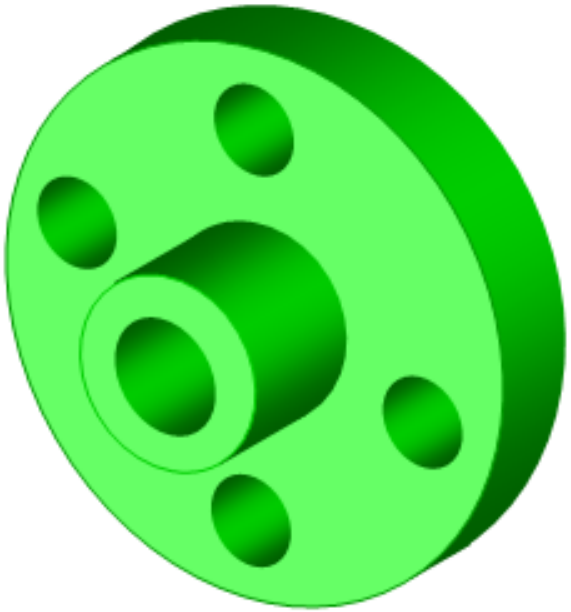

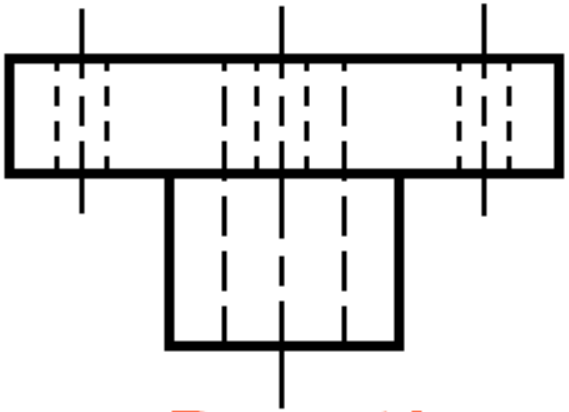

Repeat !

Example (8)

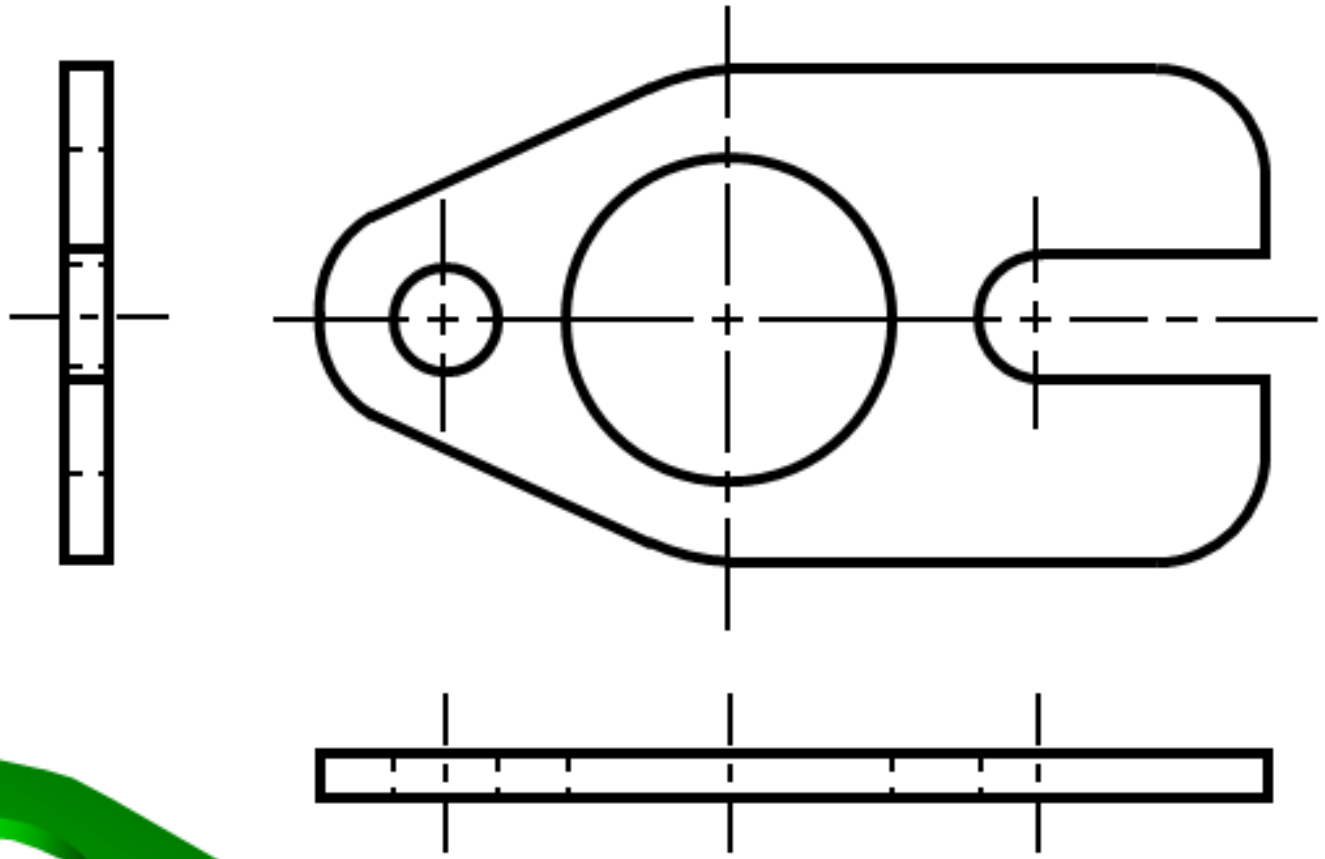

Example (9)

Necessity of align view

Strictly Projection

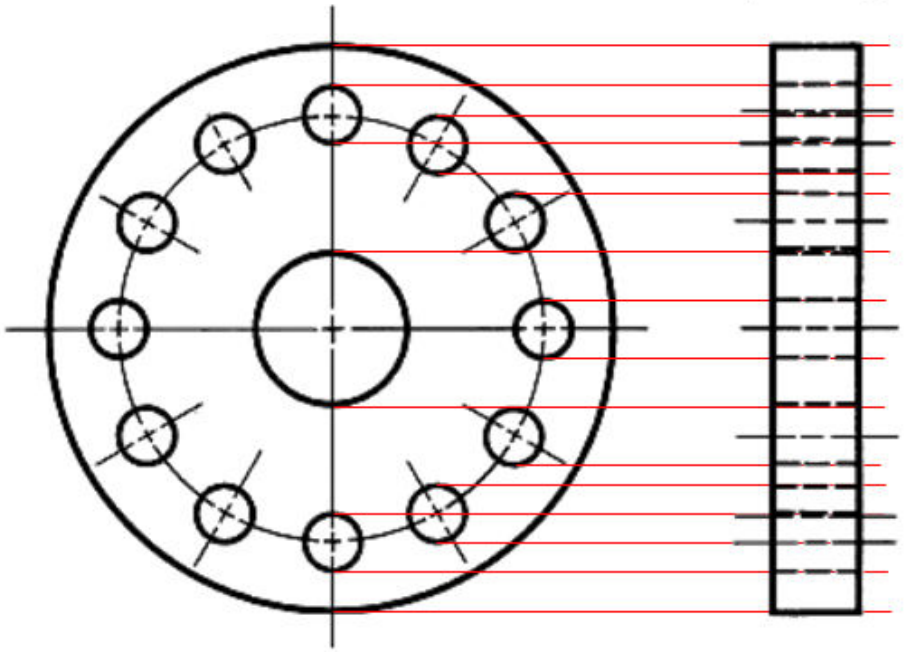

Apply convention

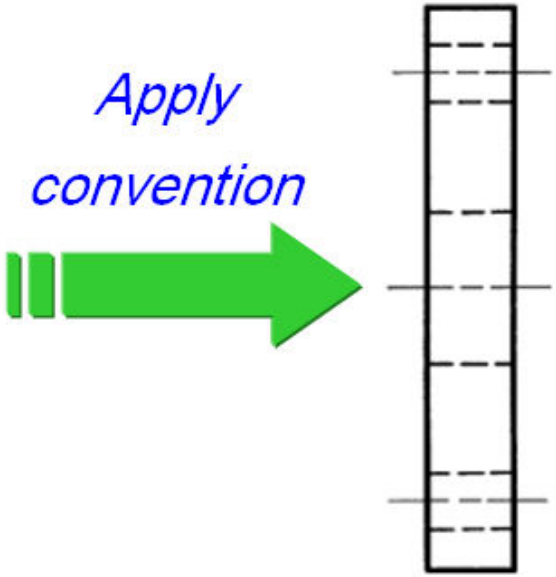

Confuse

Waste of time

Clear

Example (10)

Align view of holes

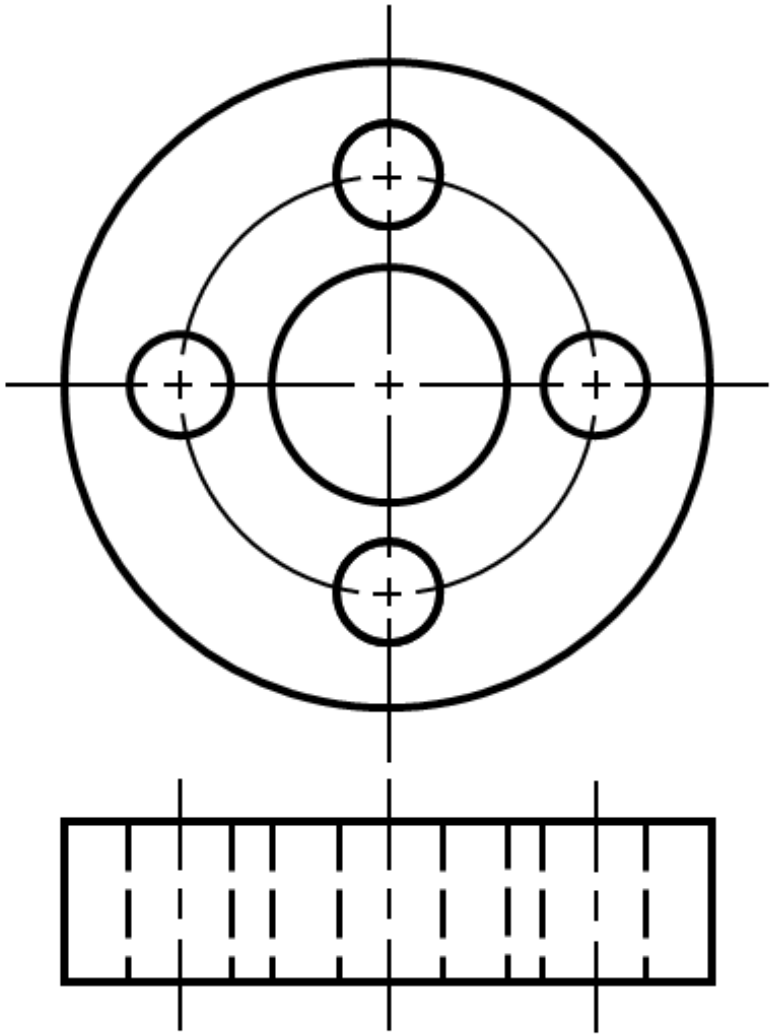

Apply aligned convention

Example (11)

Non-existing line of intersection

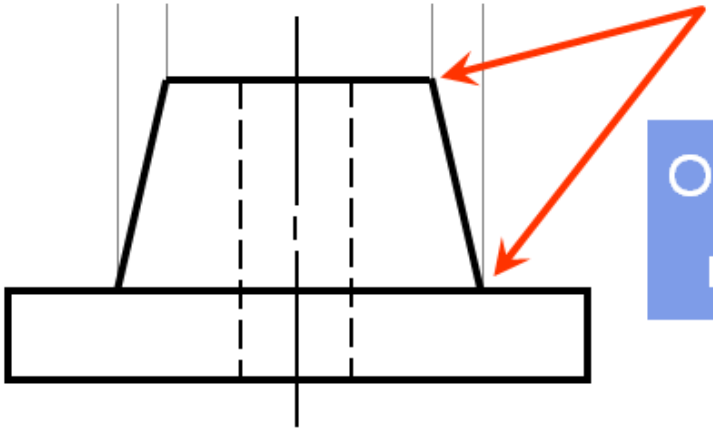

Object does not has rounds and fillets

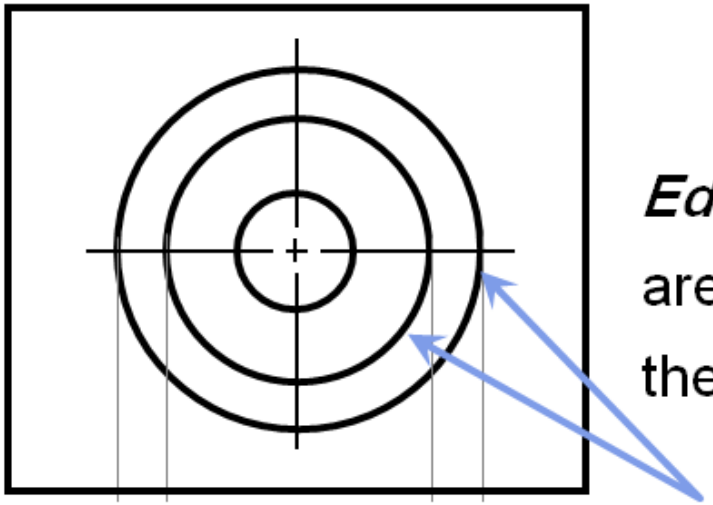

Edges of the surfaces are shown as *lines* in the top view.

Example (12)

Non-existing line of intersection

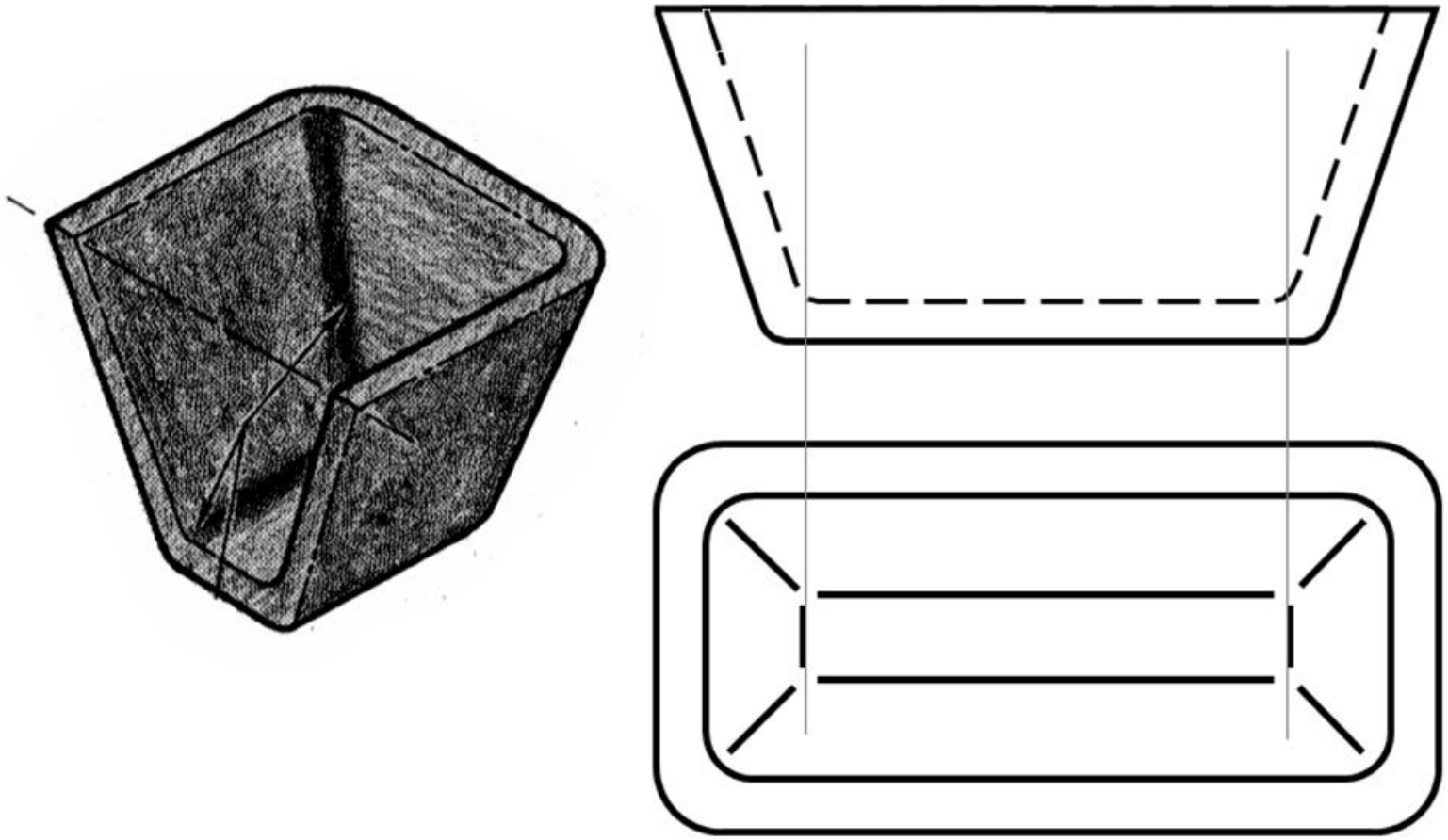

INTERSECTION BETWEEN FILLET AND ROUND

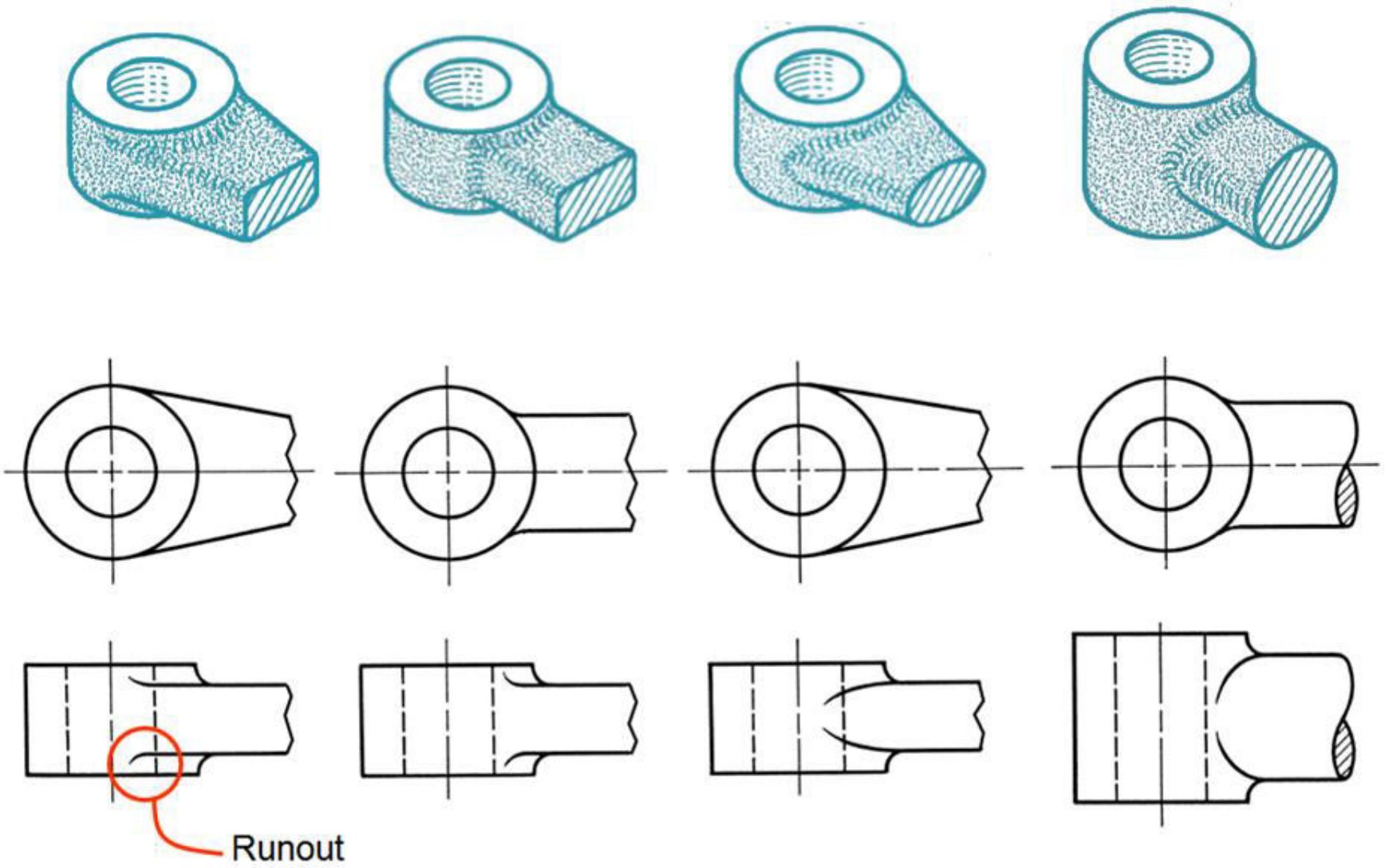

INTERSECTION BETWEEN FILLET AND ROUND

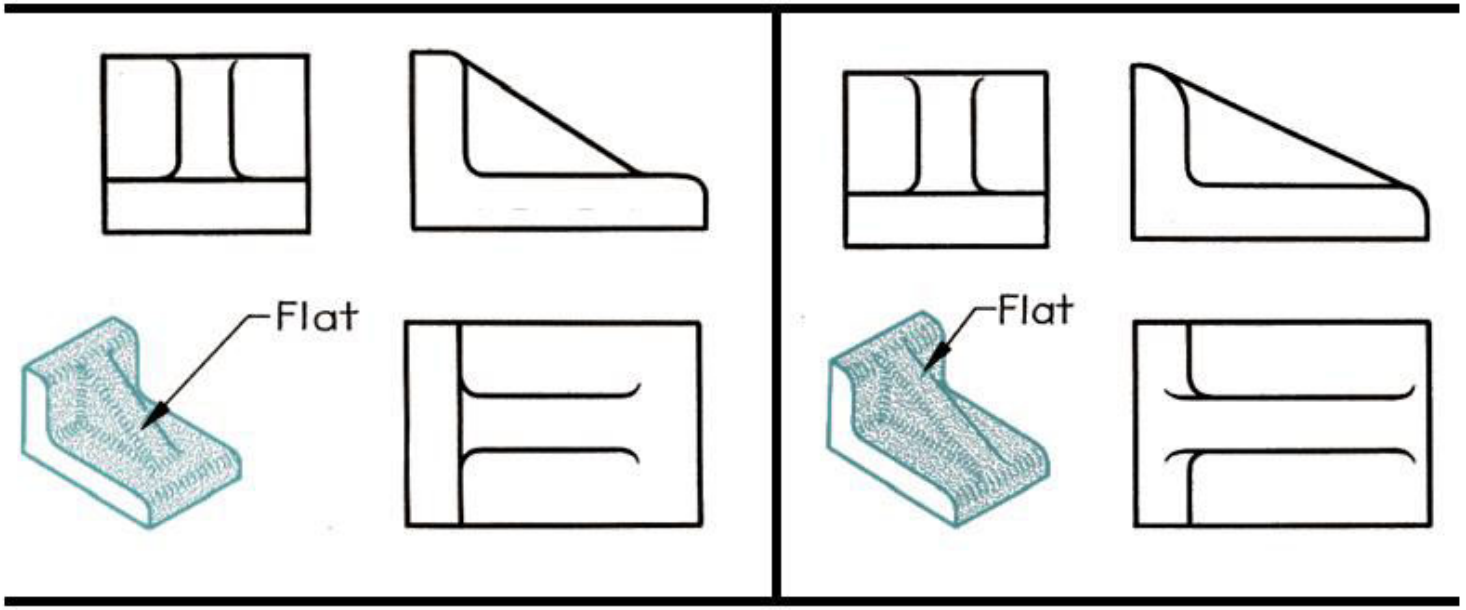

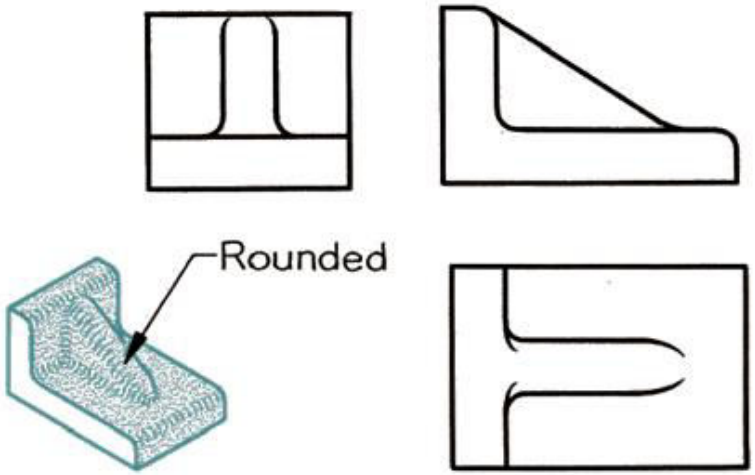

INTERSECTION BETWEEN ROUND PLANE SURFACE

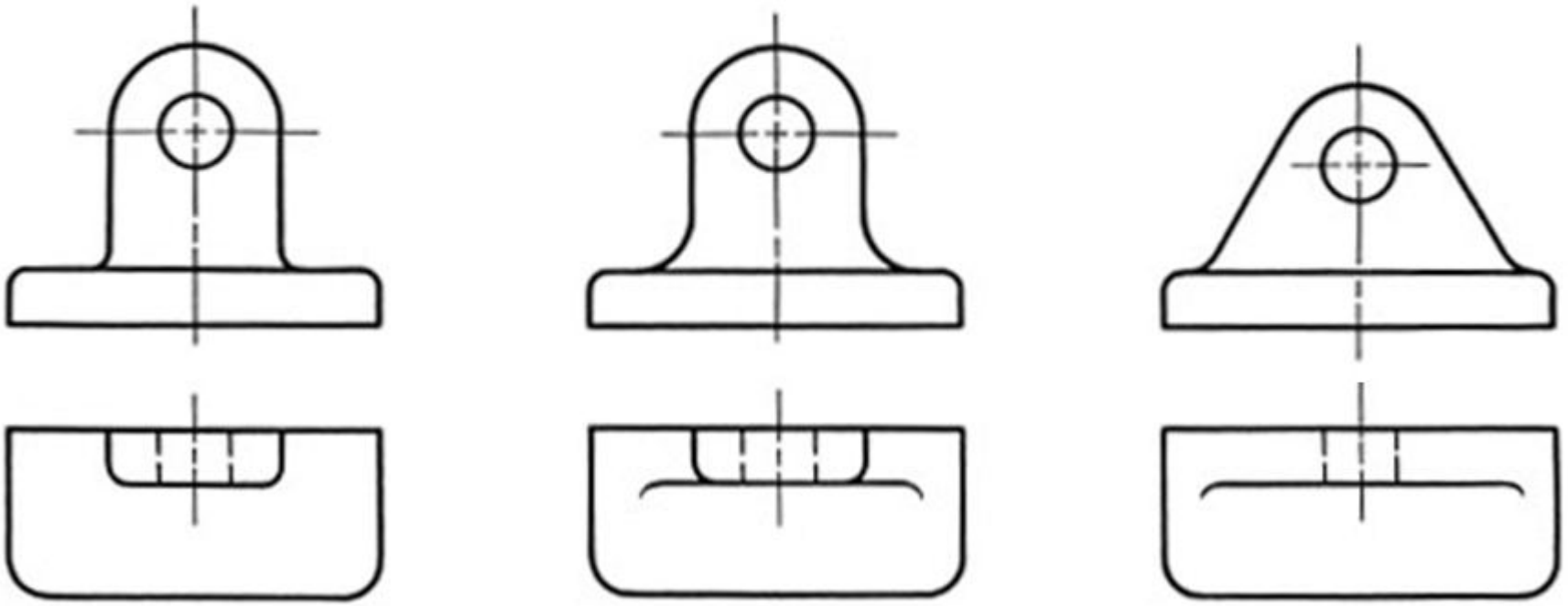

تمارين المحاضرة السادسة

إرسم المساقط العمودية الثلاثة للأشكال التالية

تمارين الصالة

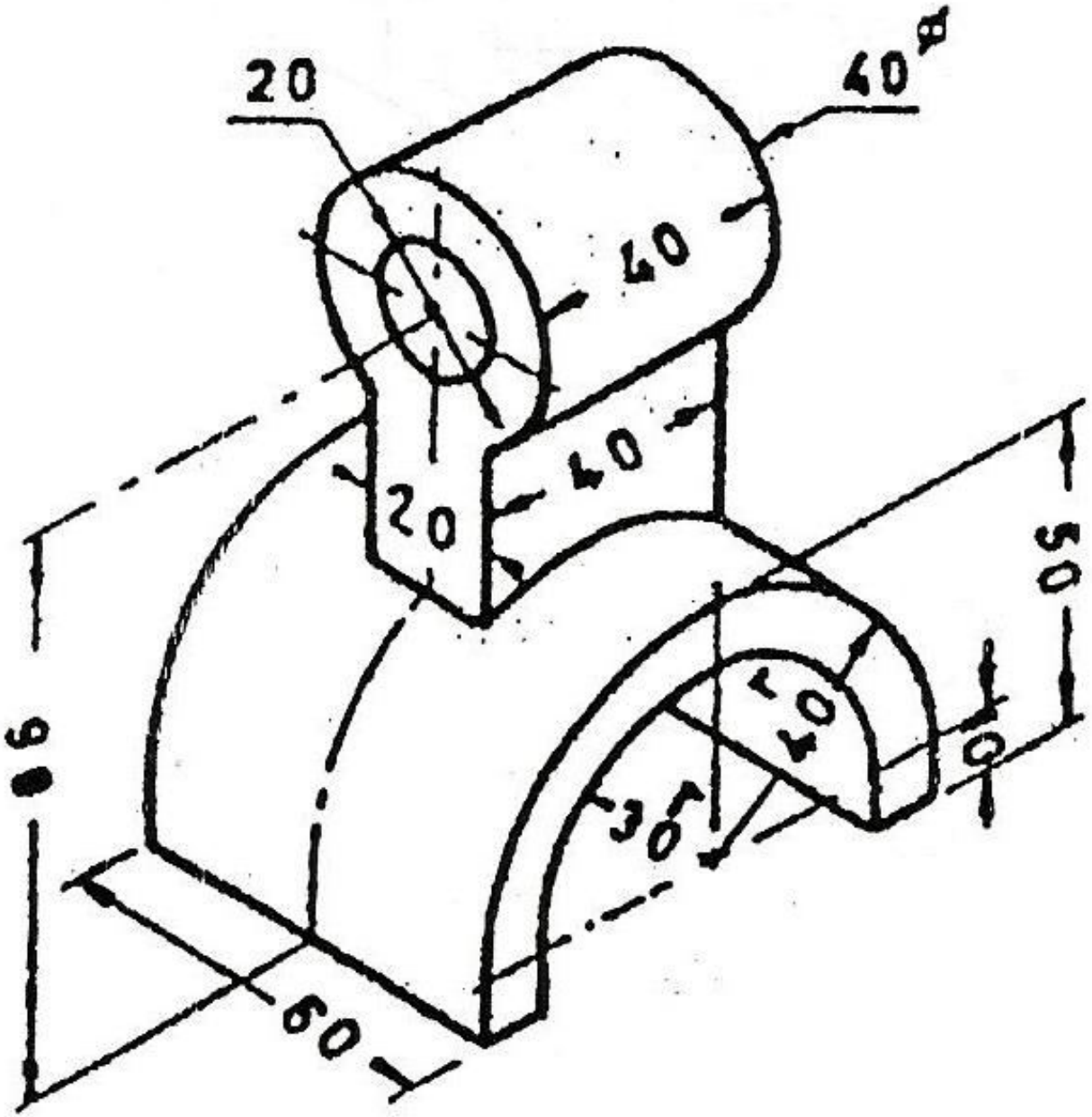
20
40ø
40
40
20
50
40
10
30
90
60

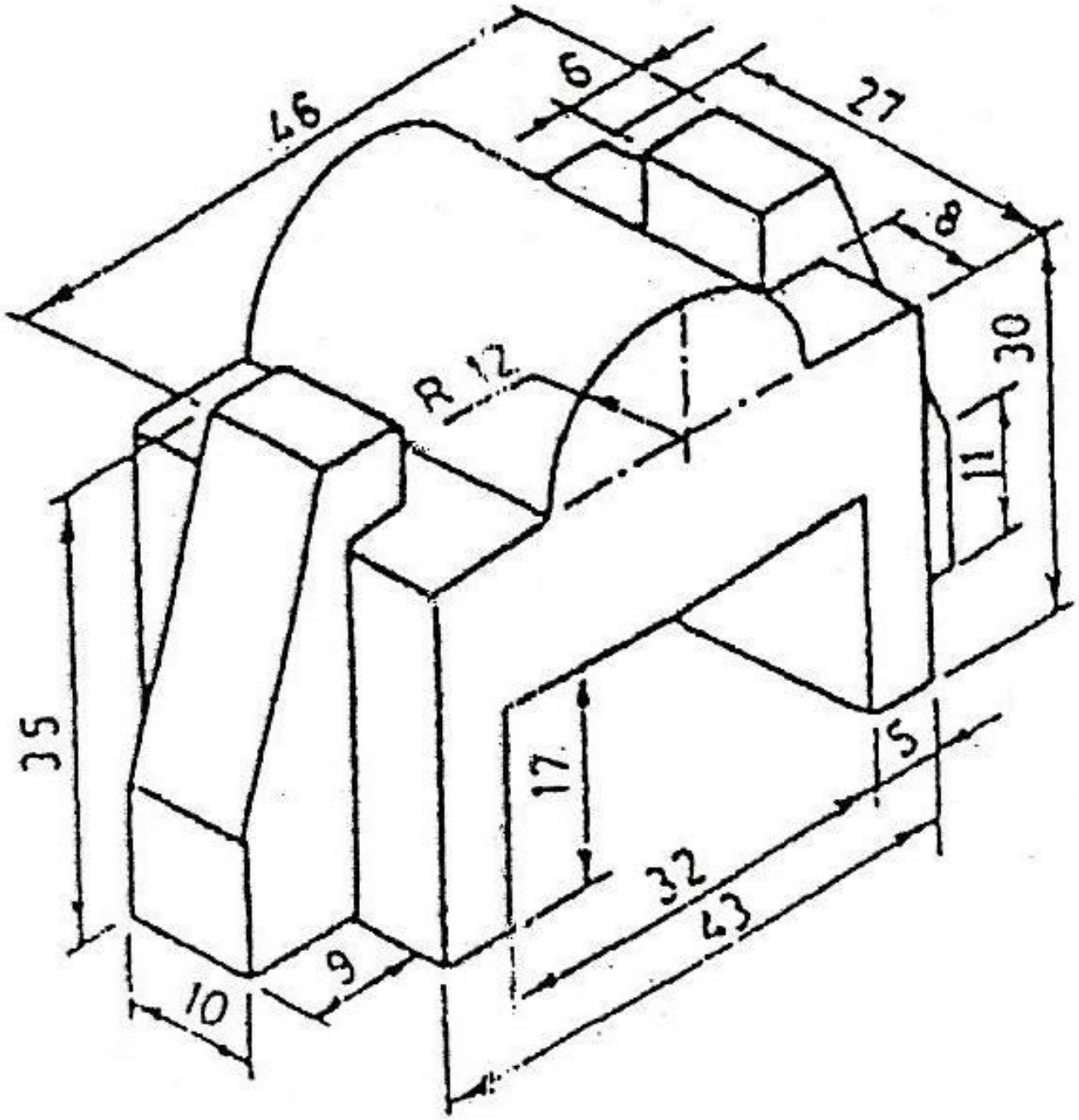
46
6
27
8
30
R 12
11
35
17
5
32
43
9
10

تمارين الواجب

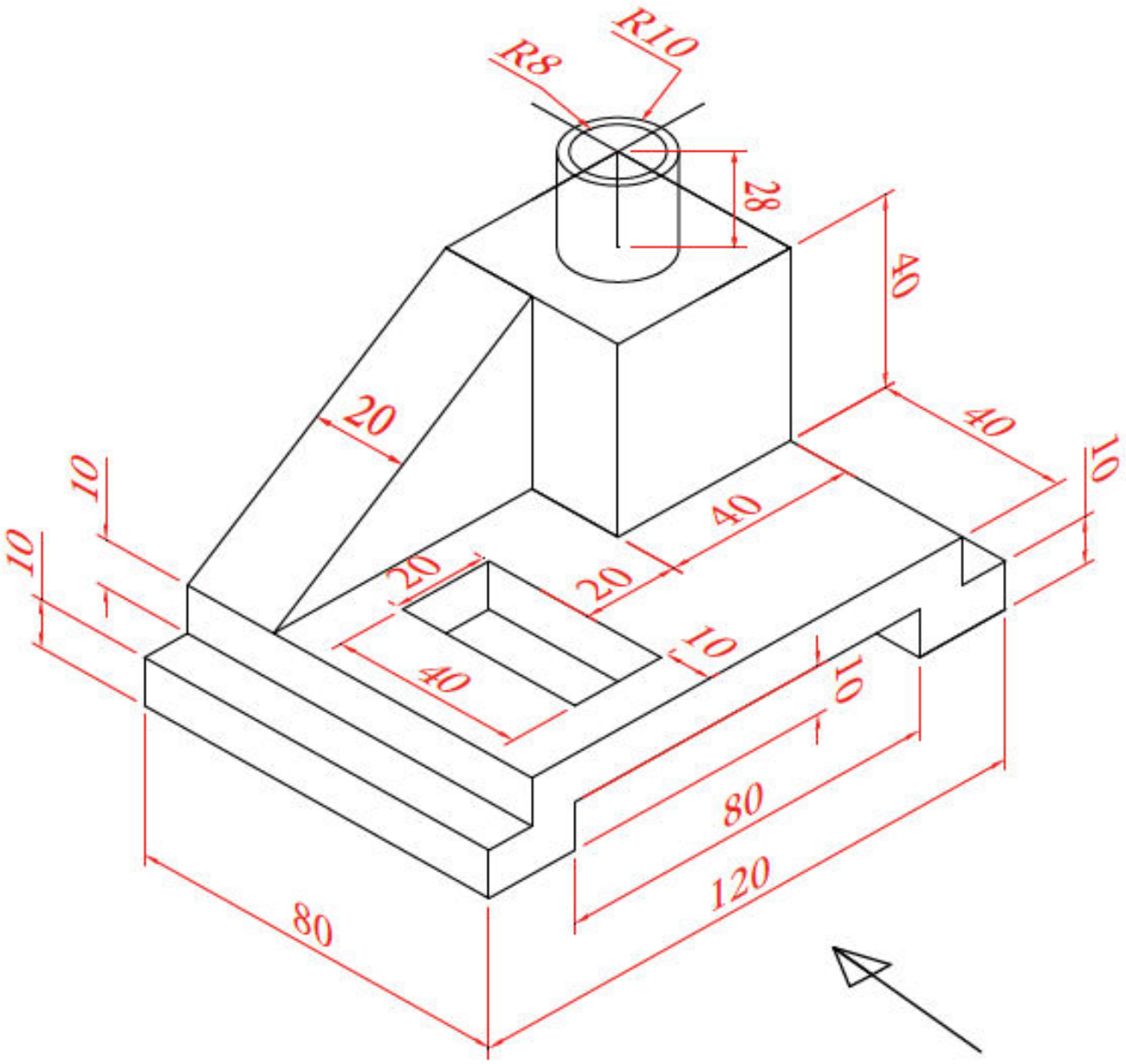
R10
R8
28
40
20
40
10
10
10
20
20
40
10
10
40
80
80
120

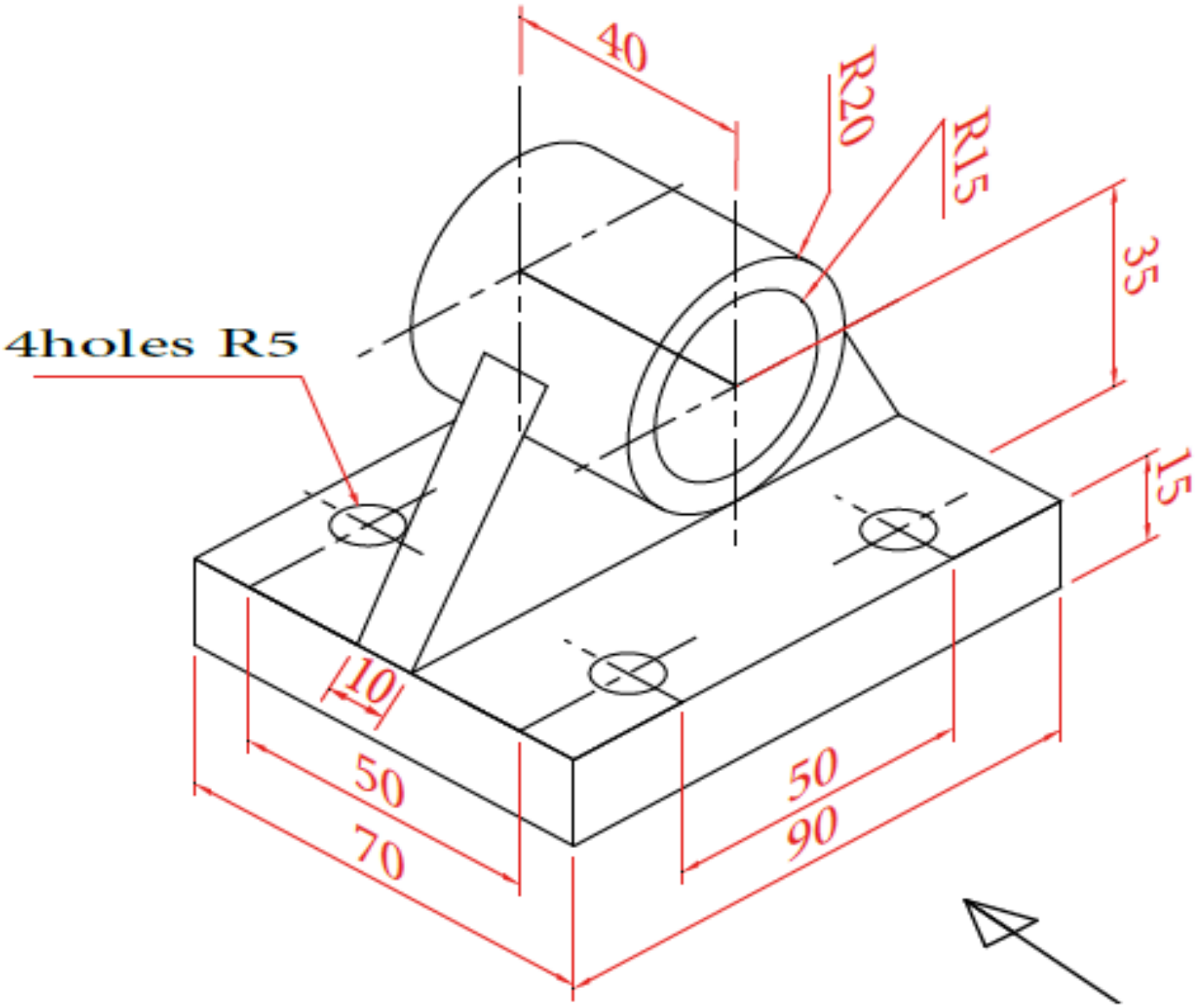
40
R20
R15
35
4holes R5
15
10
50
70
50
90

End of Lecture 6