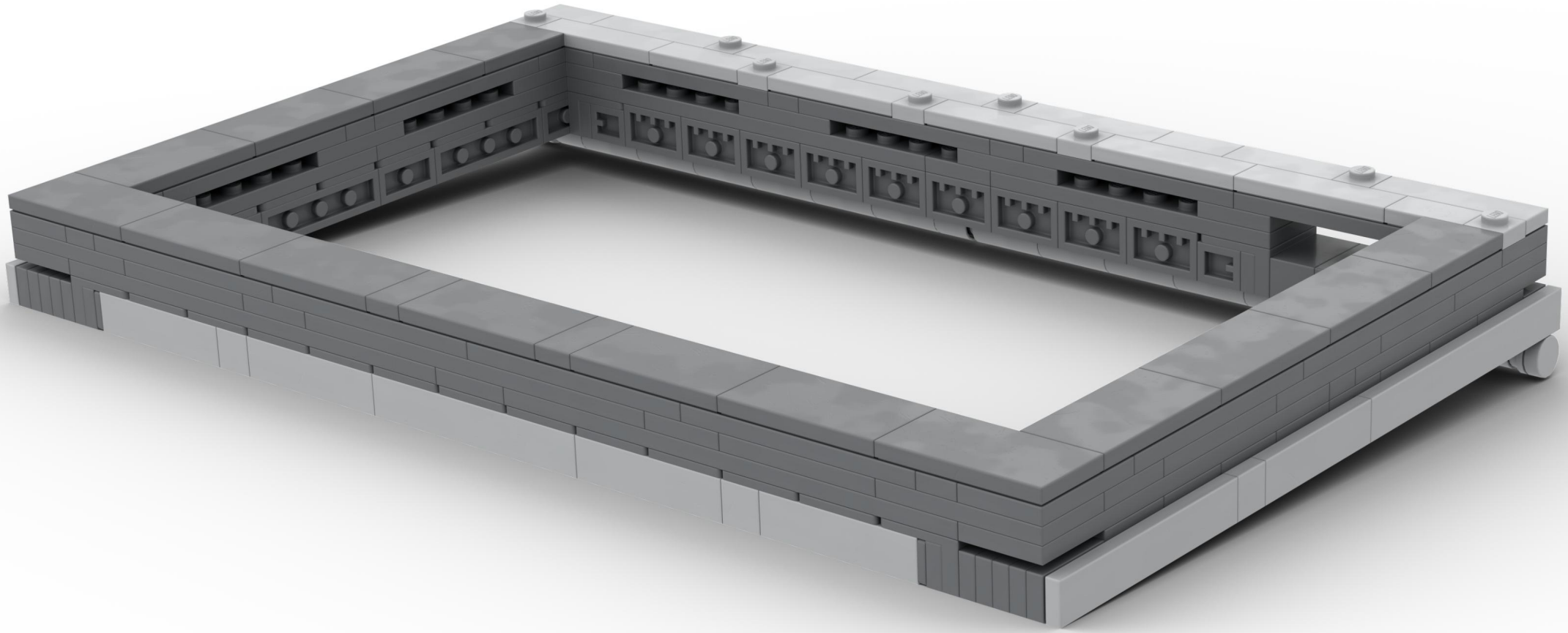

Cheeseboard v1 Right-Side

By: Carson Mann

1

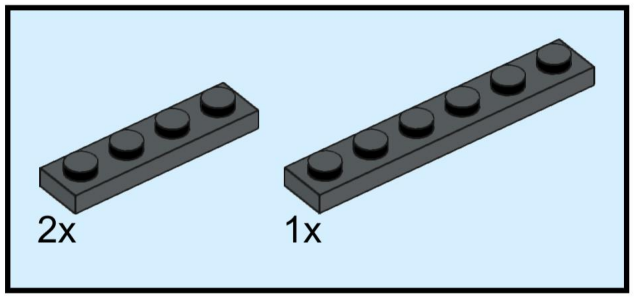

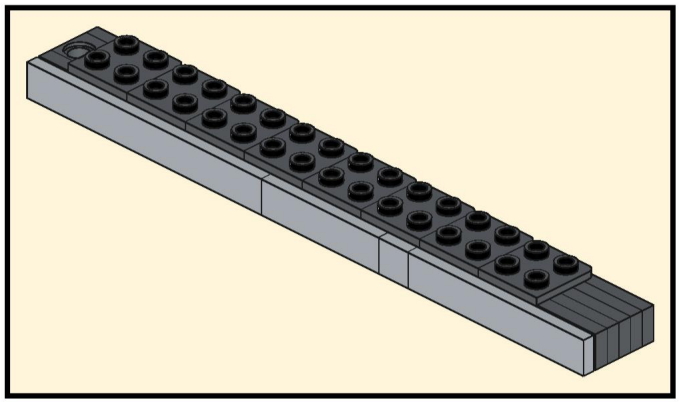

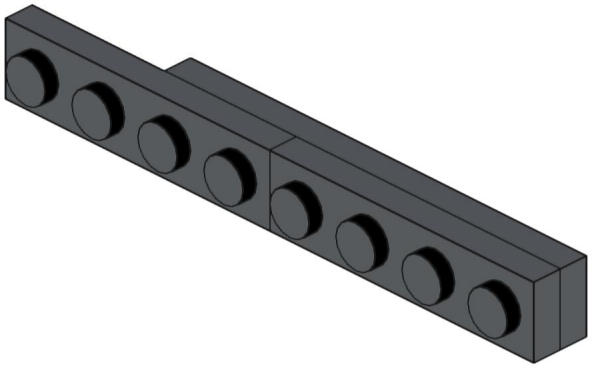

2

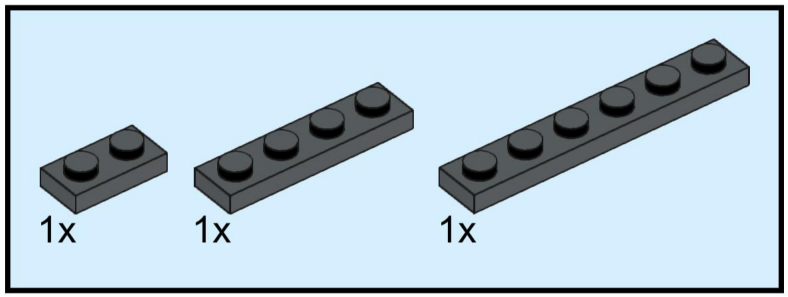

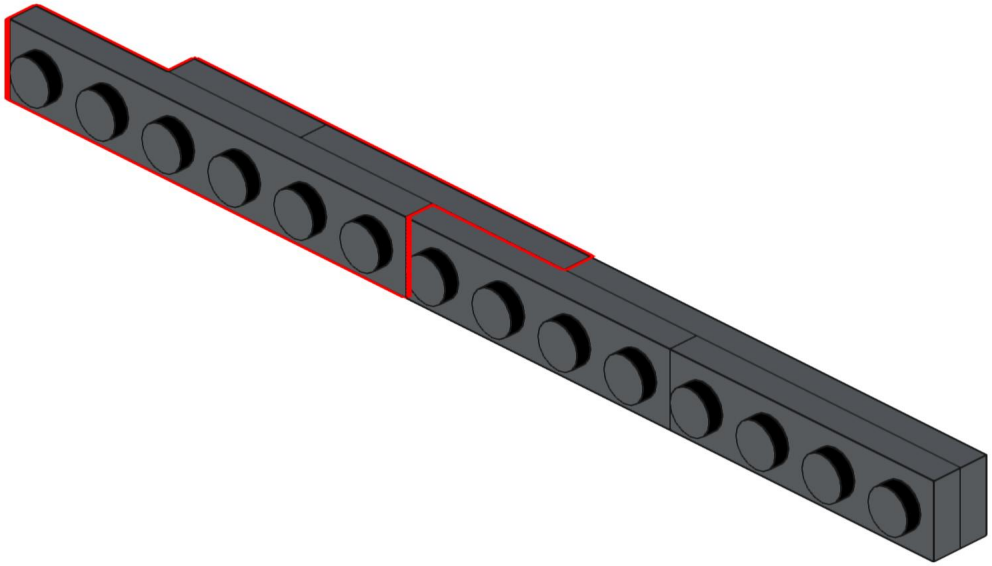

3

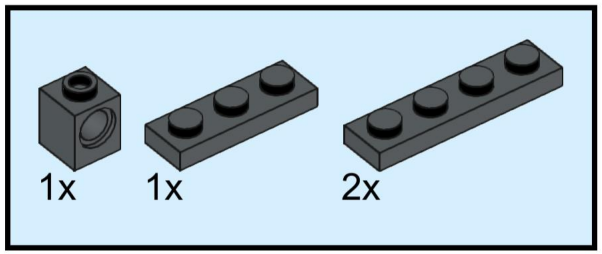

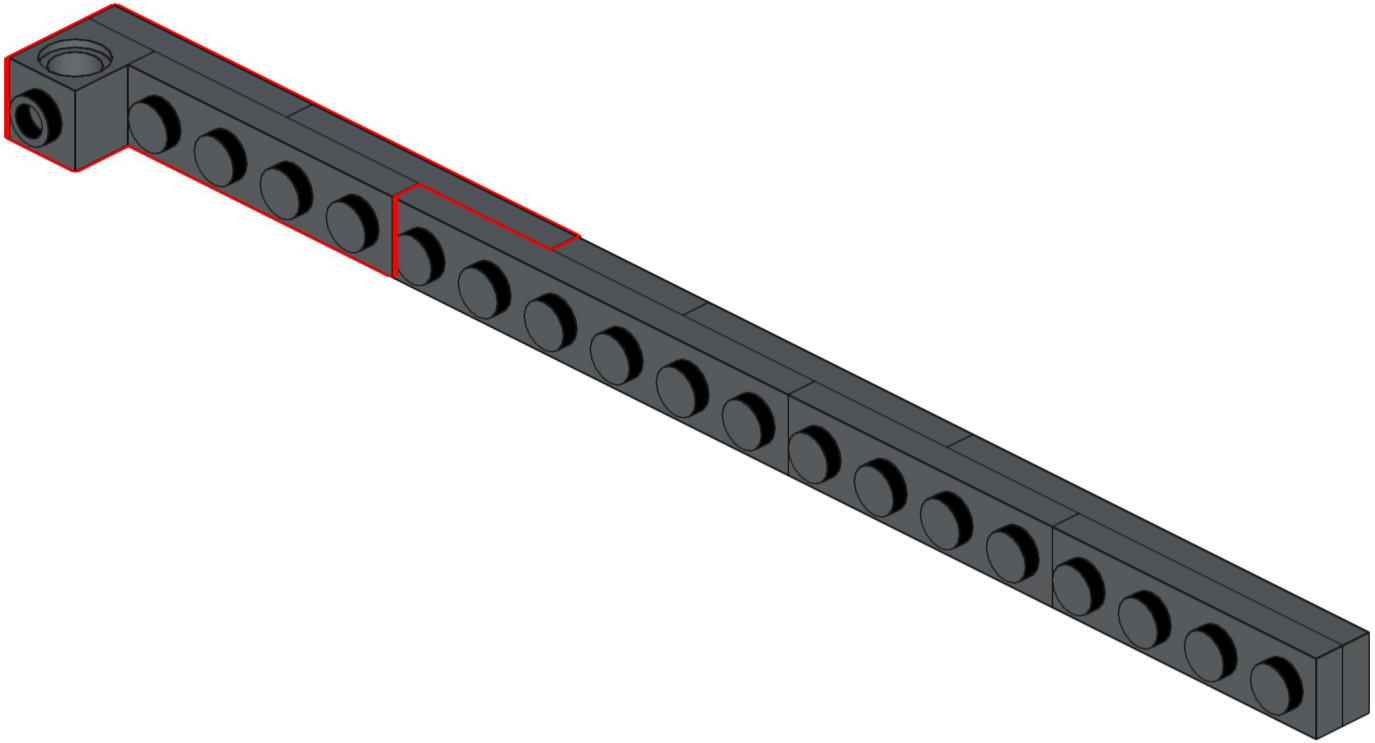

4

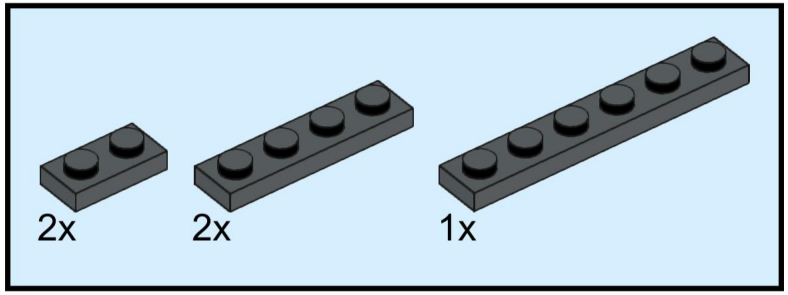

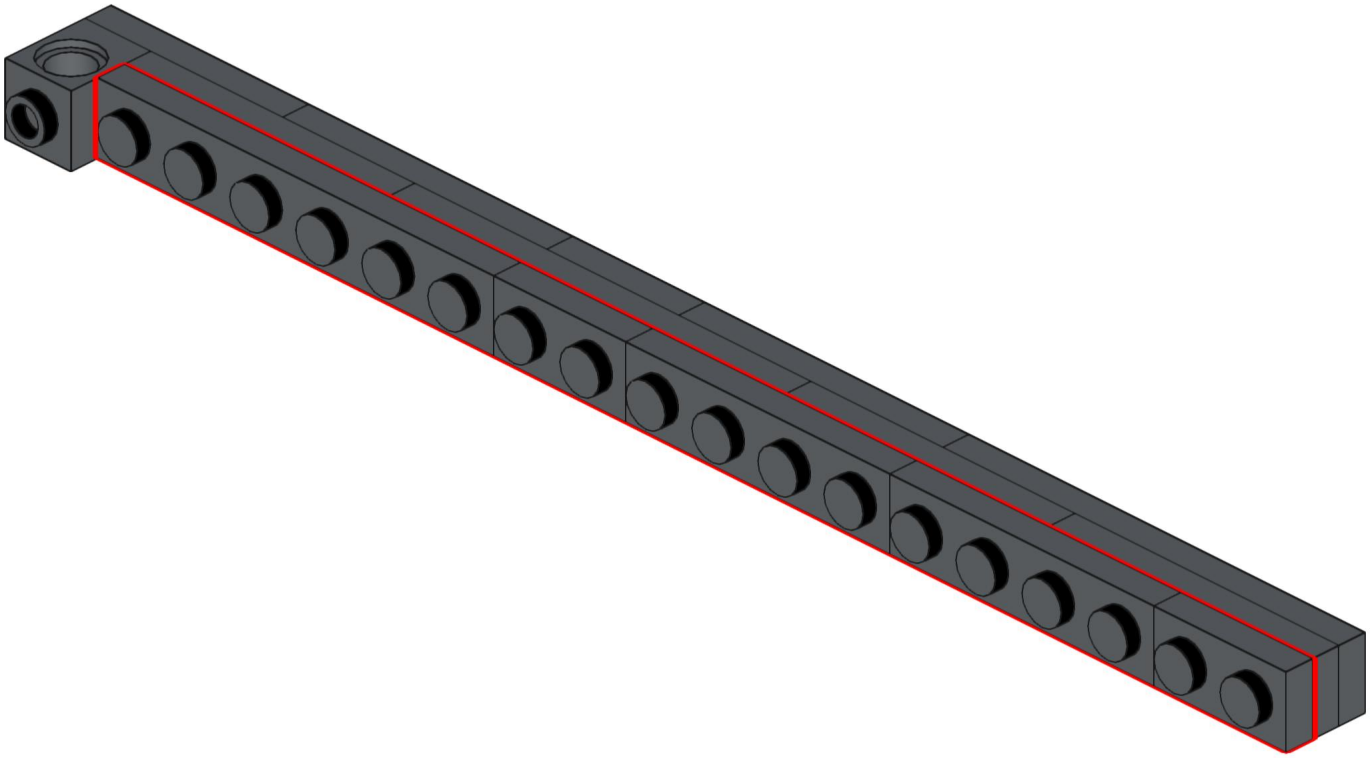

5

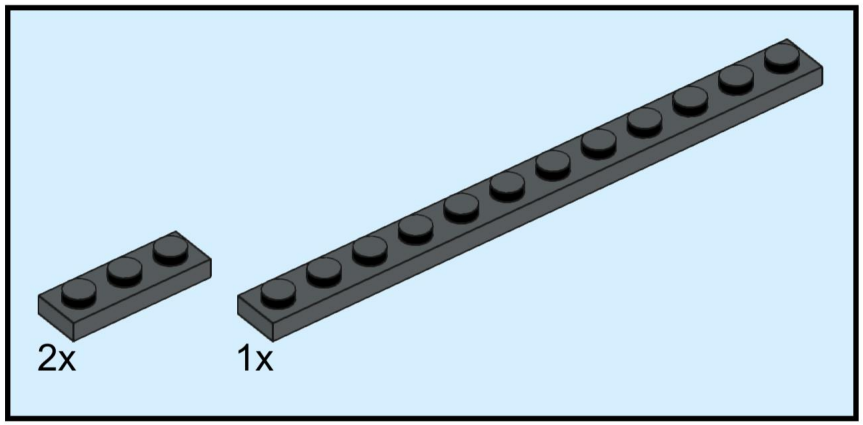

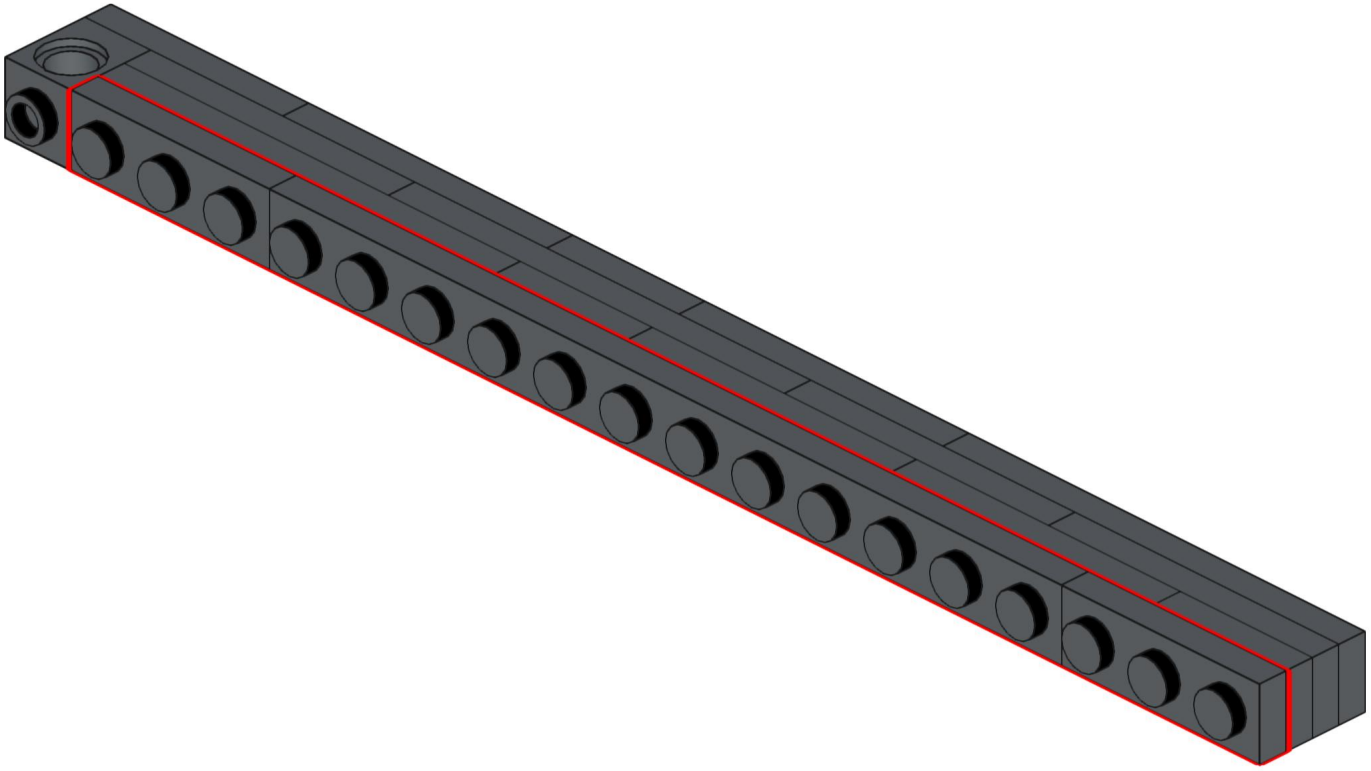

6

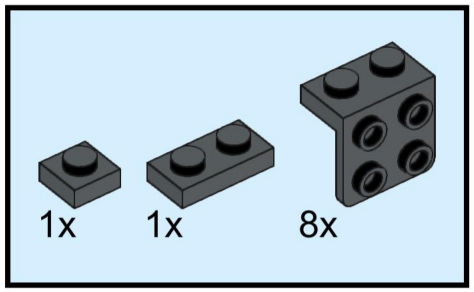

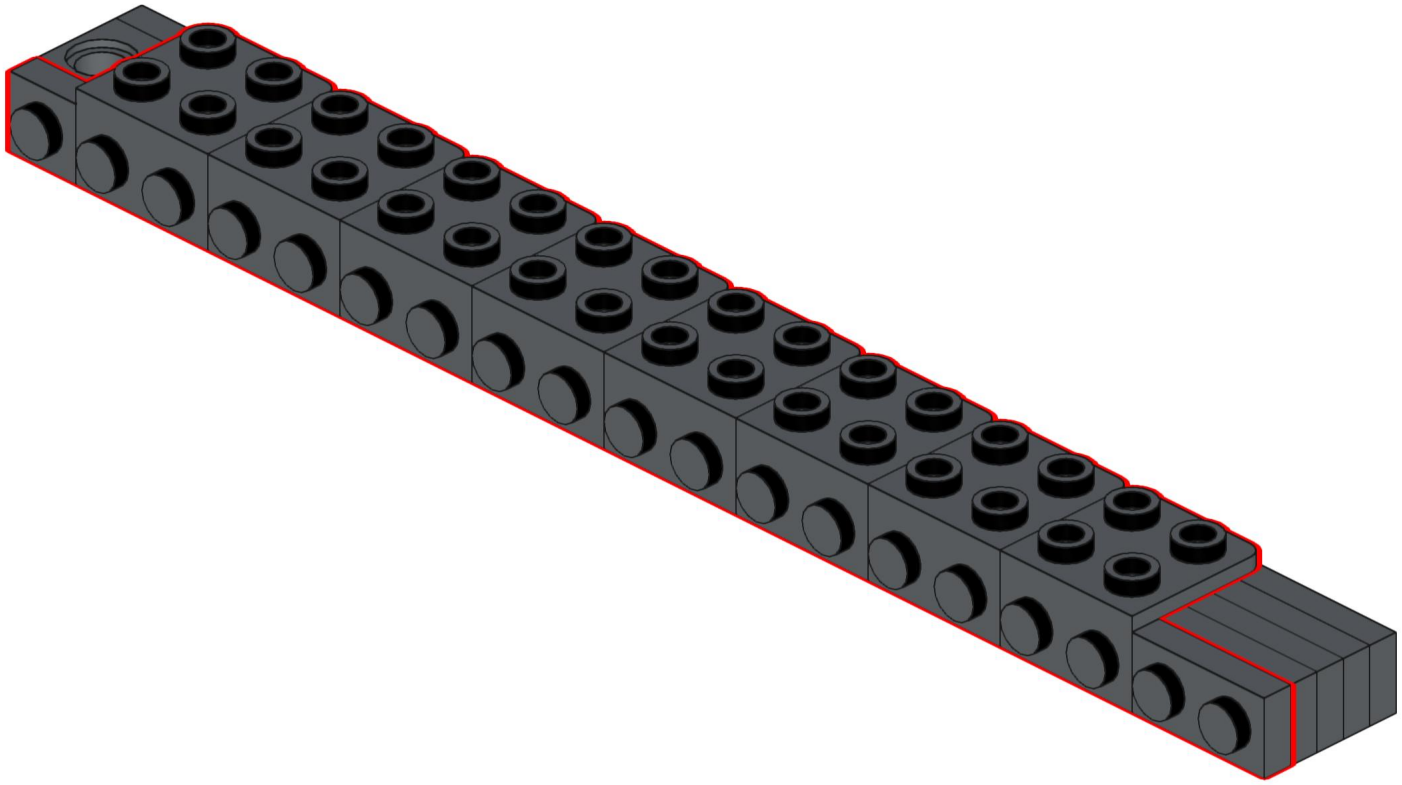

7

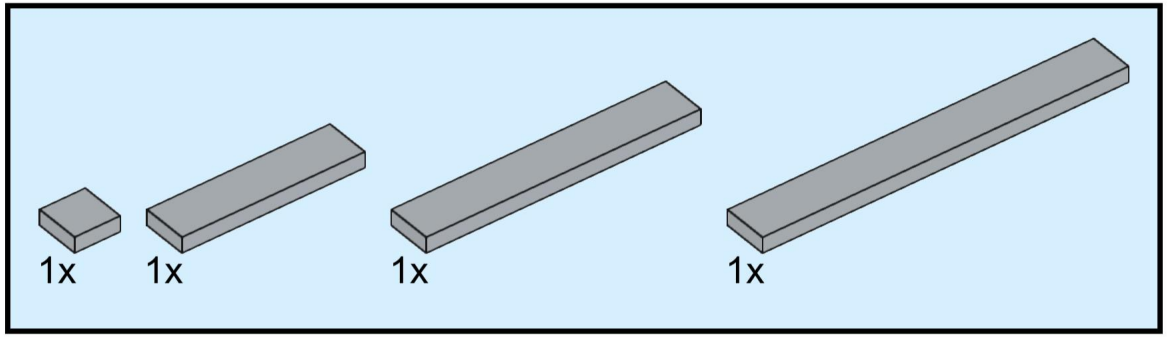

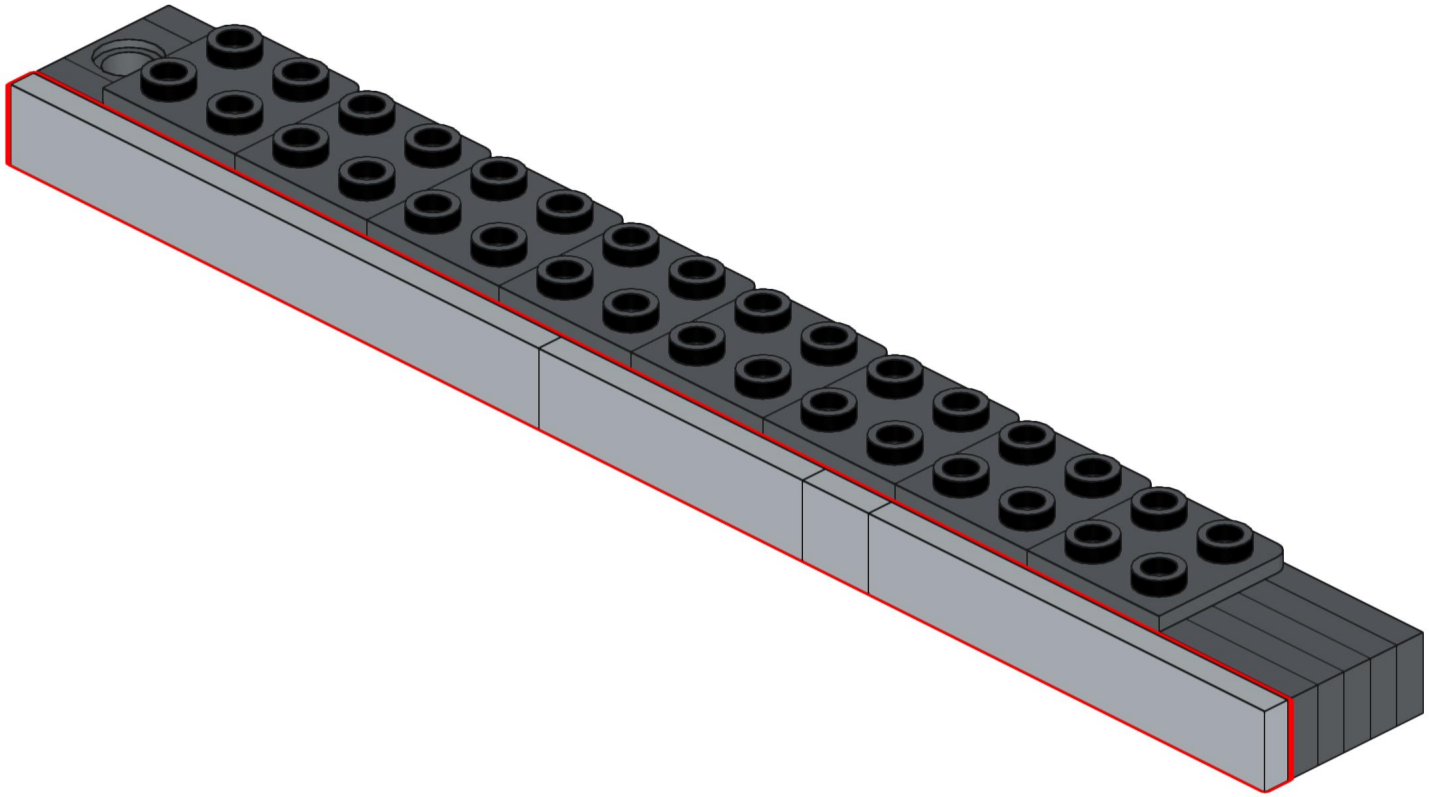

8

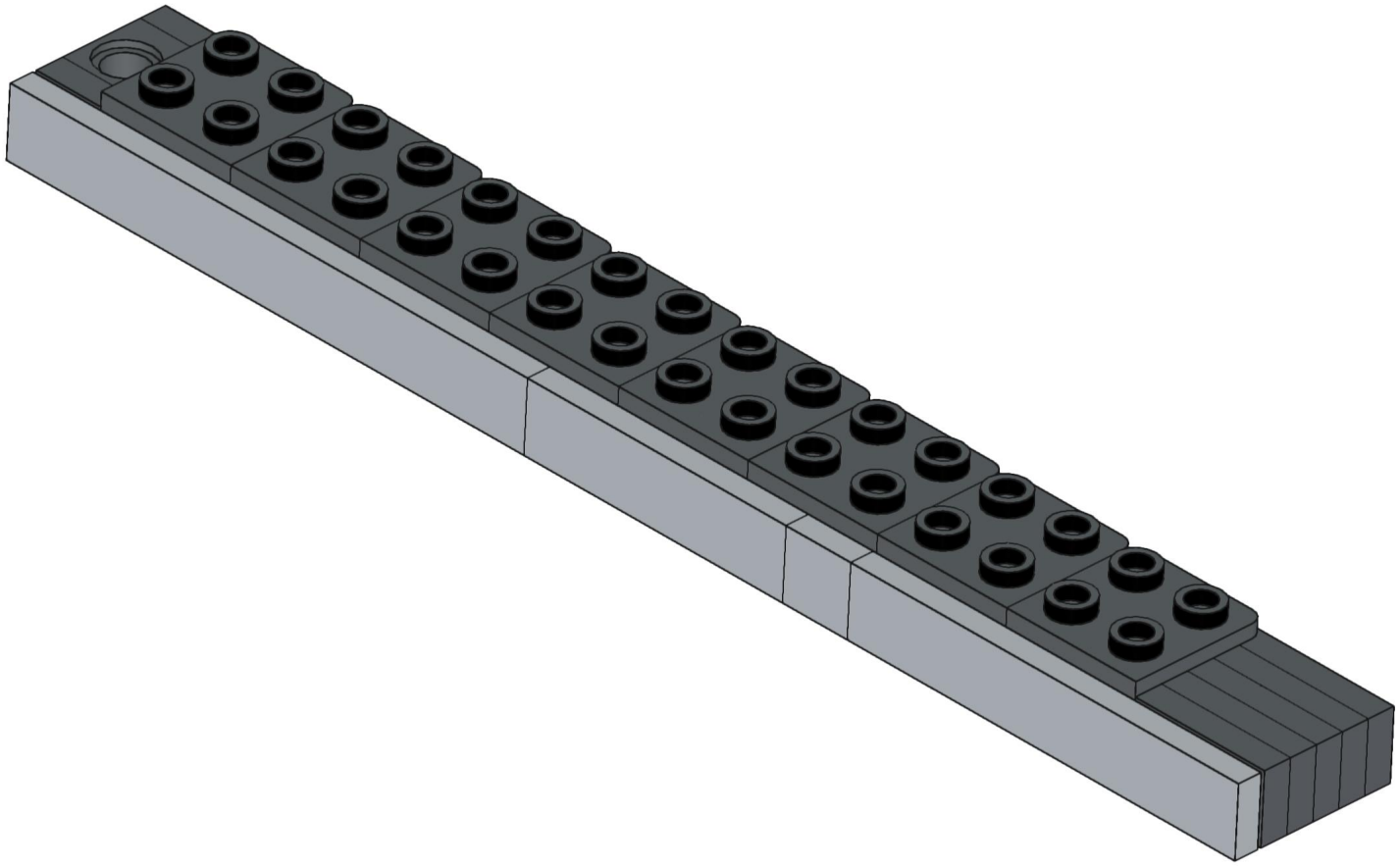

9

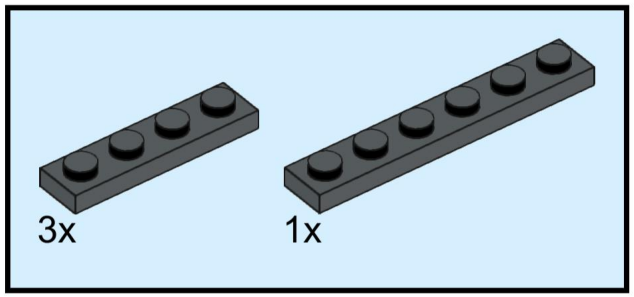

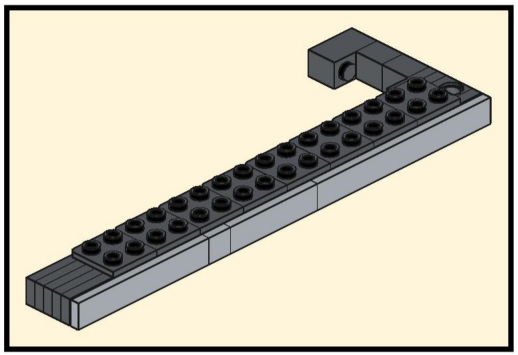

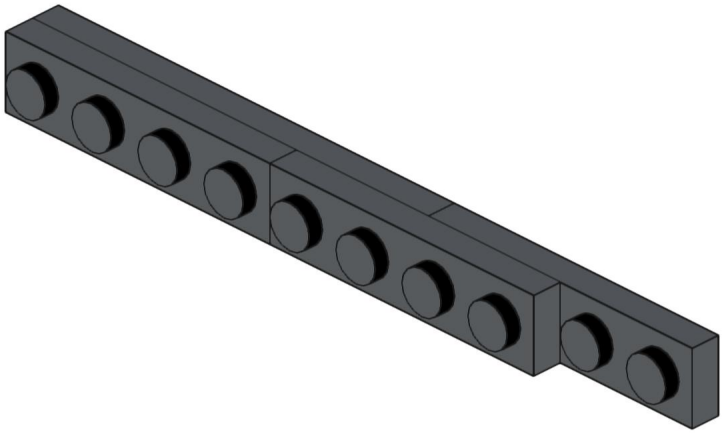

10

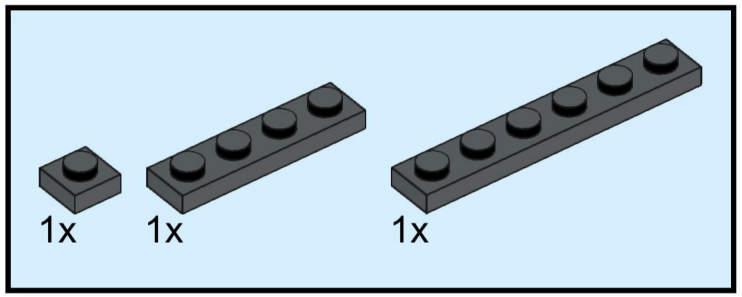

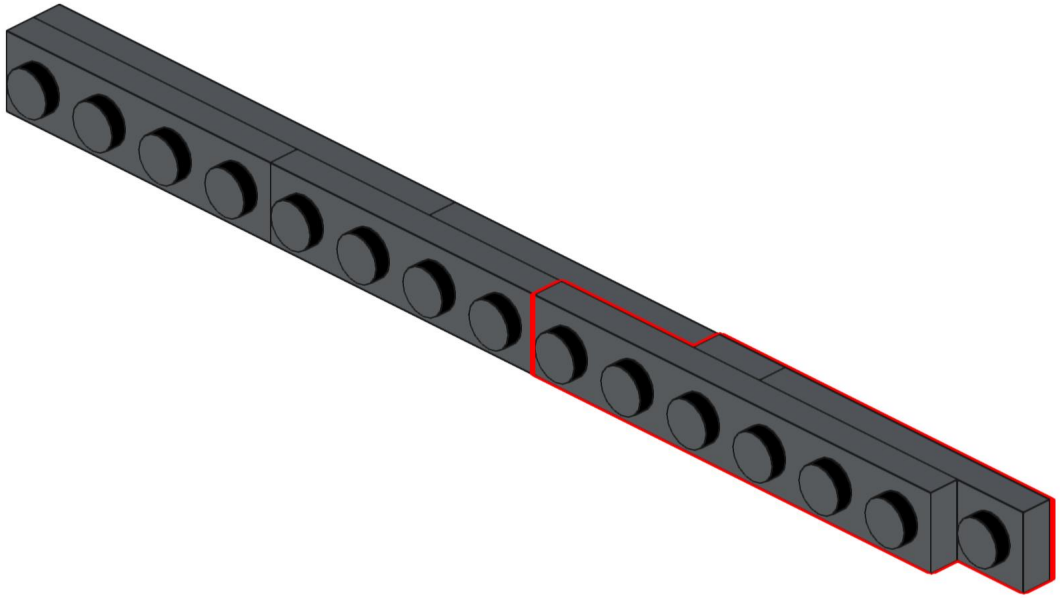

11

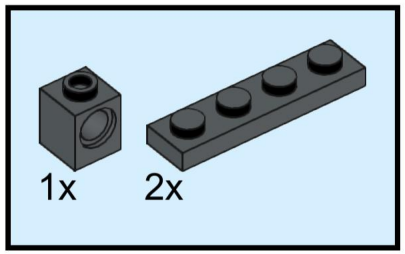

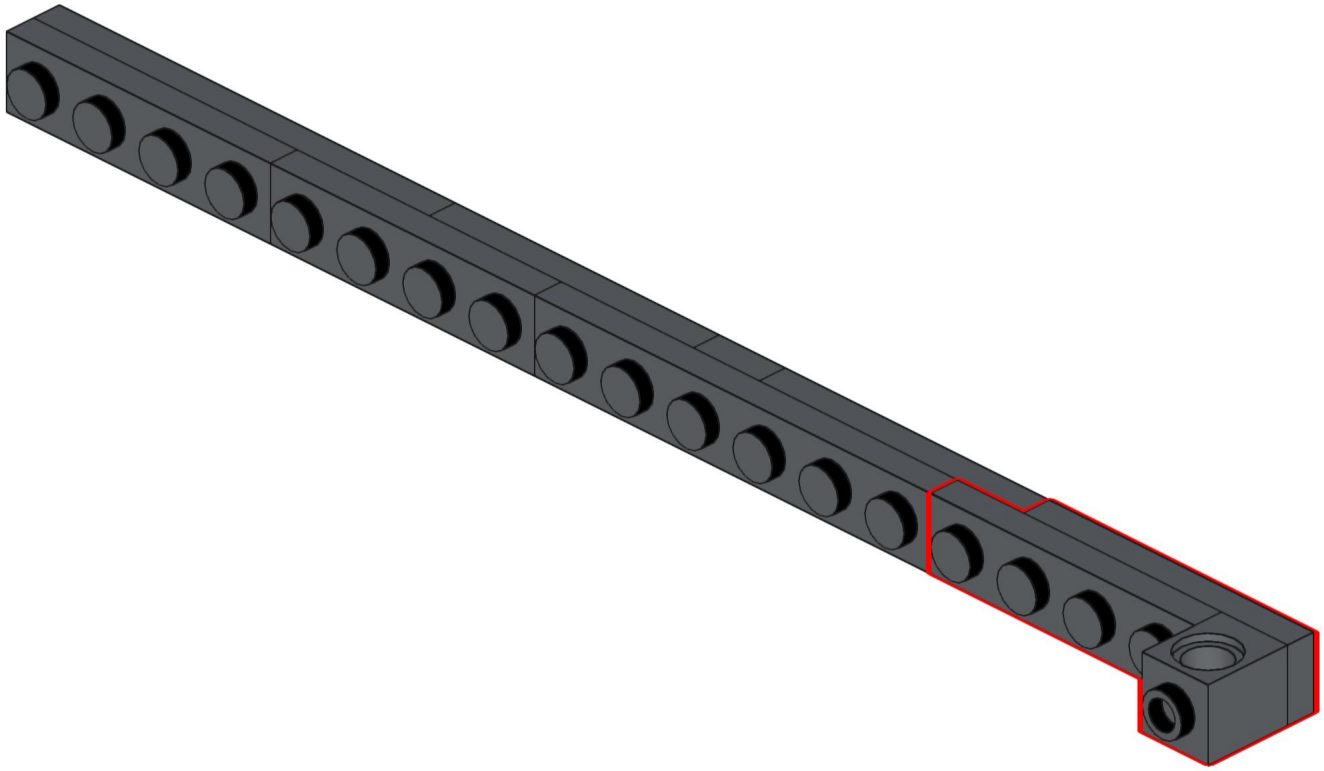

12

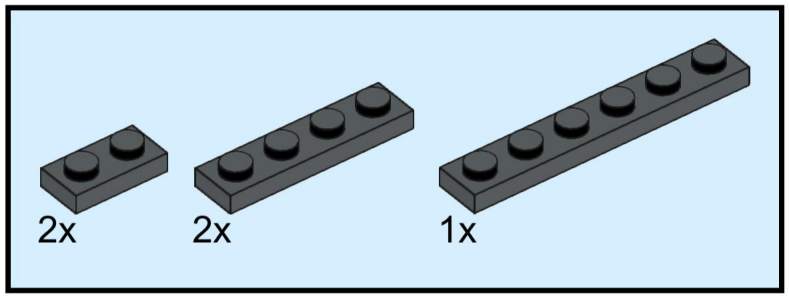

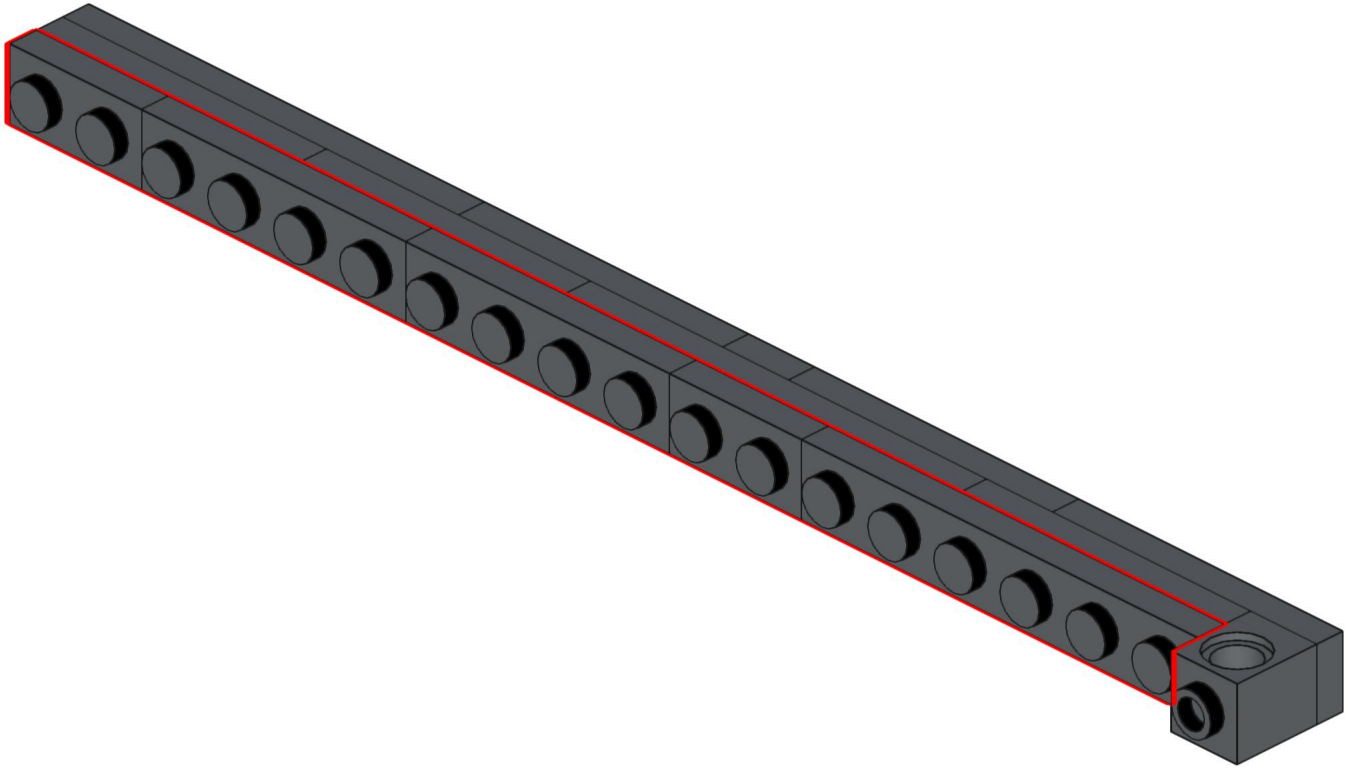

13

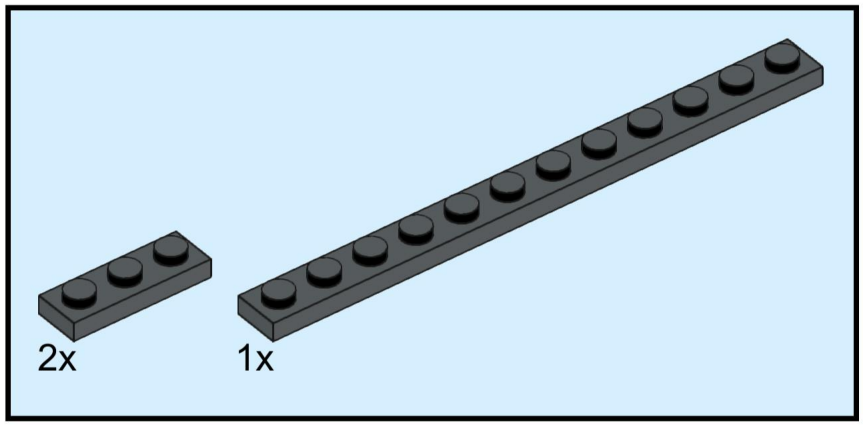

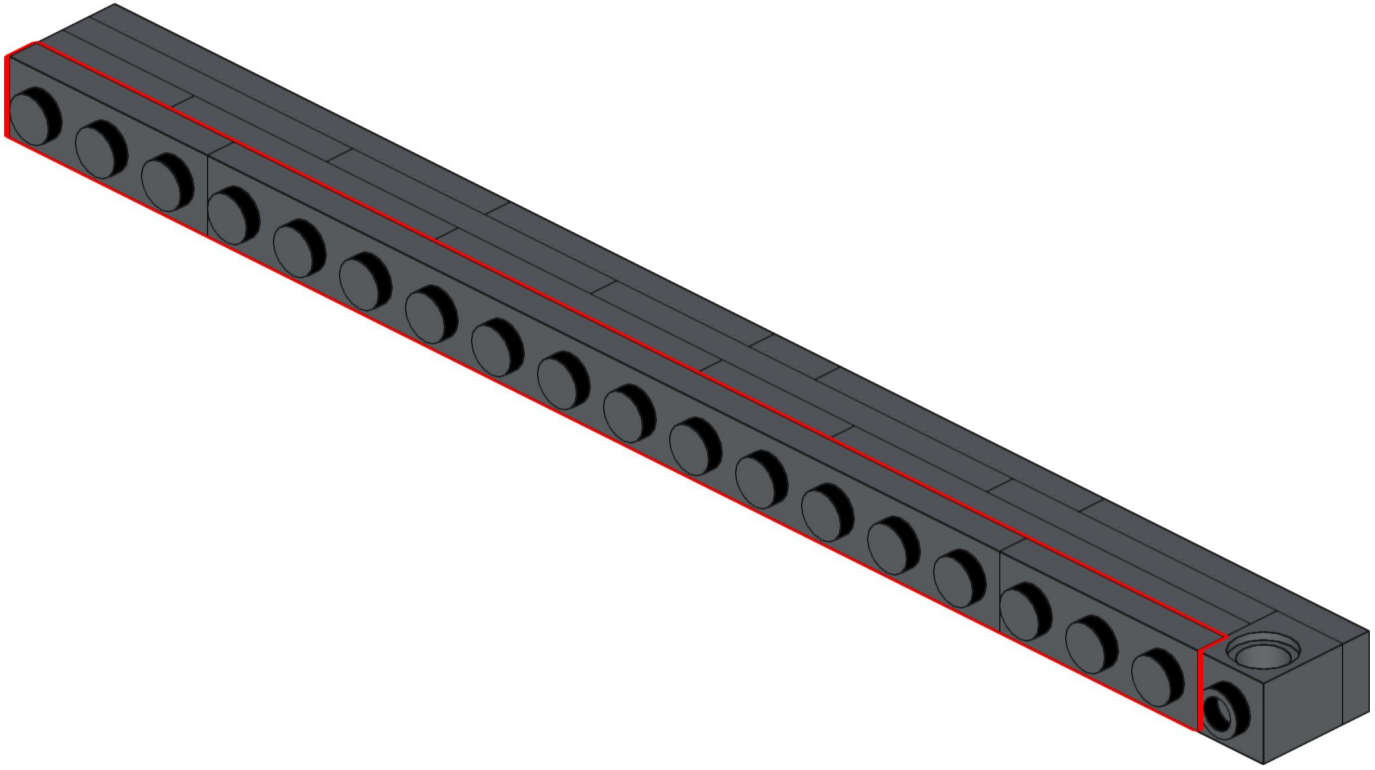

14

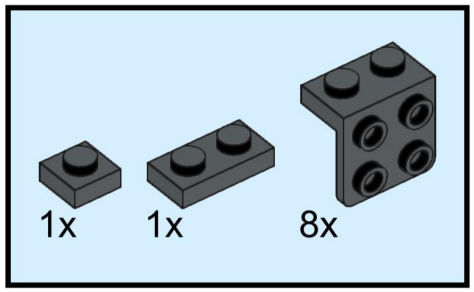

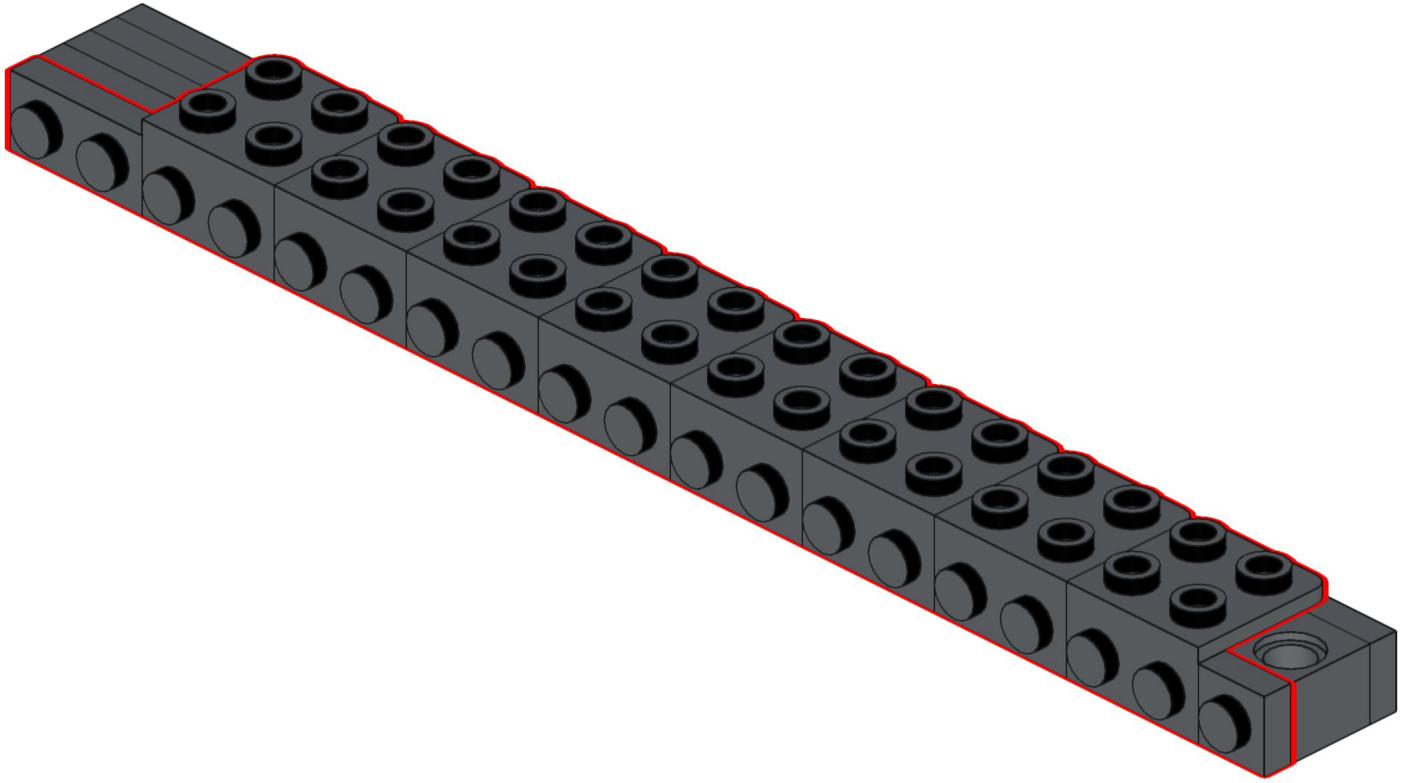

15

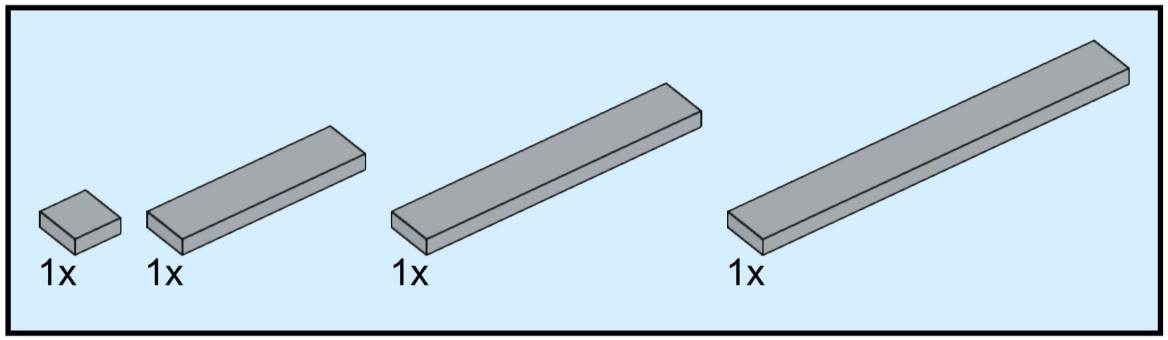

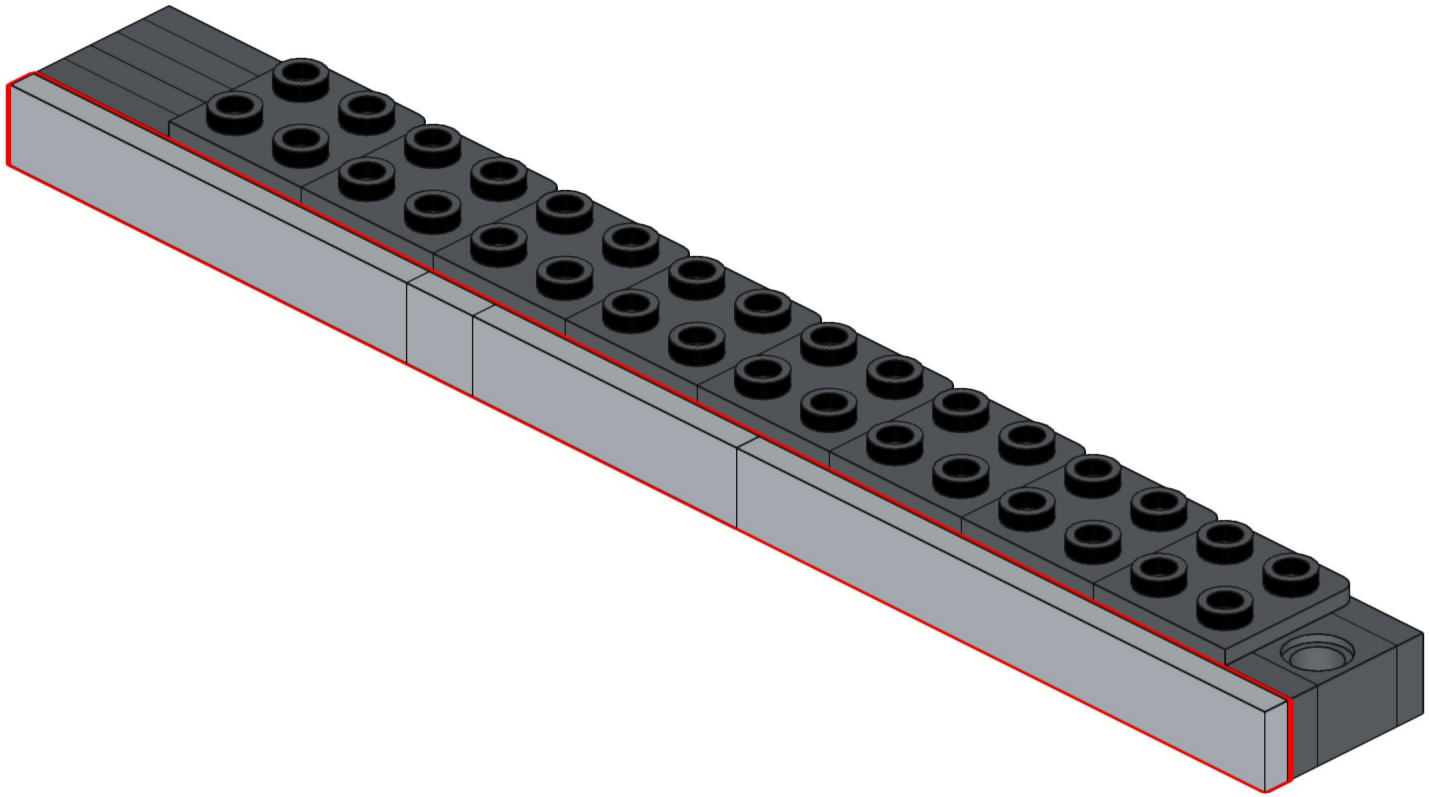

16

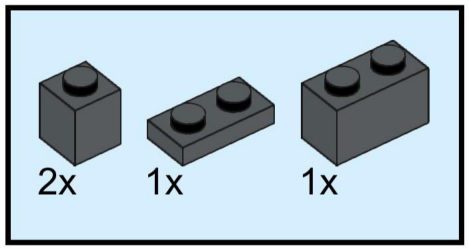

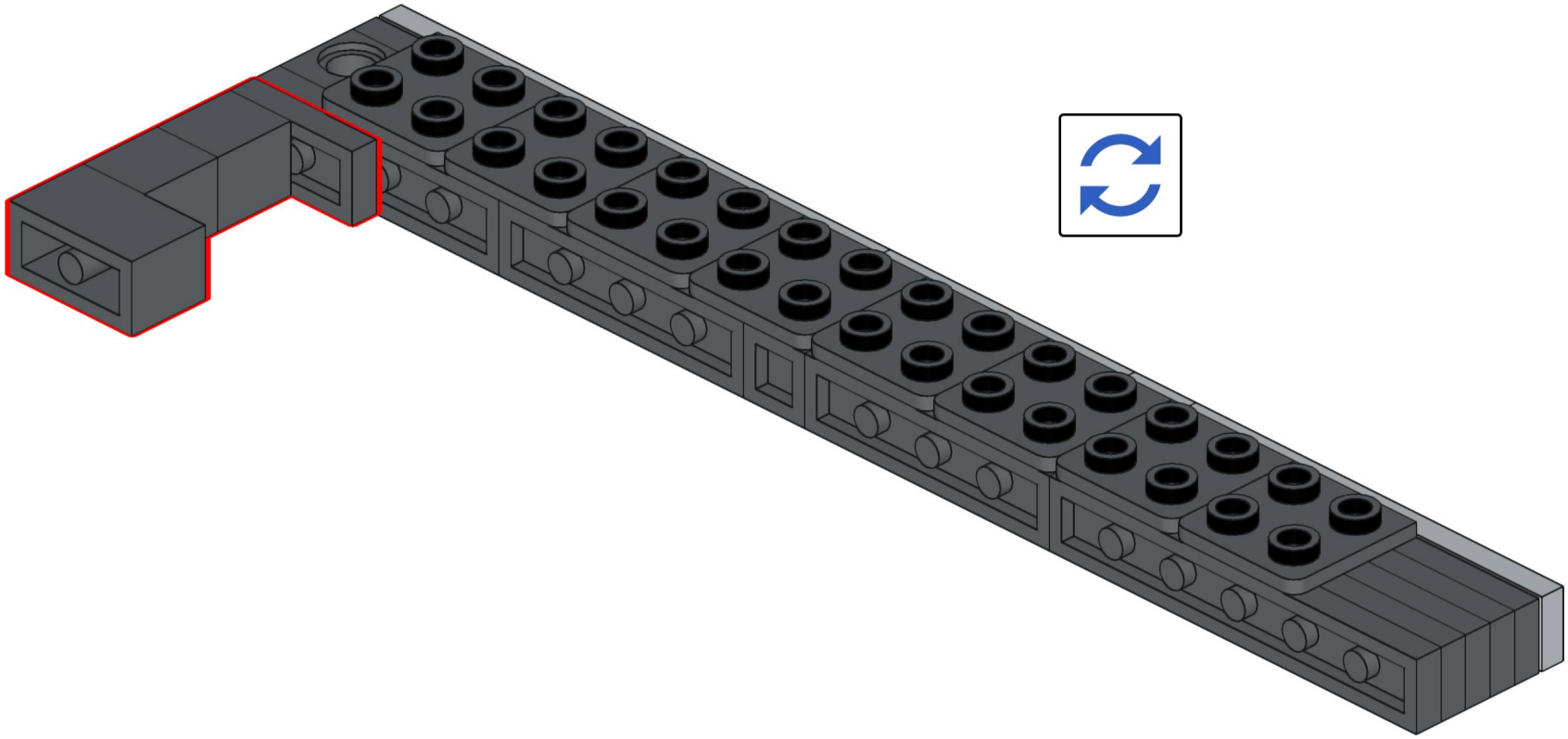

17

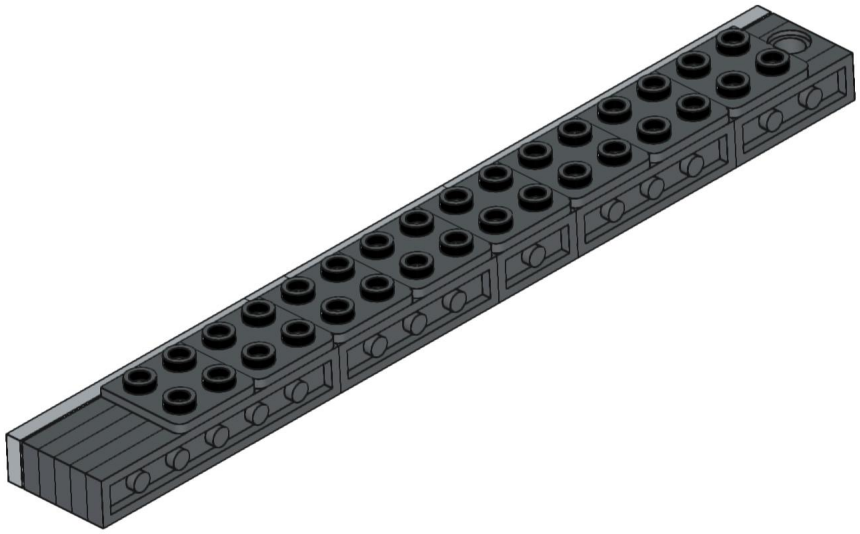

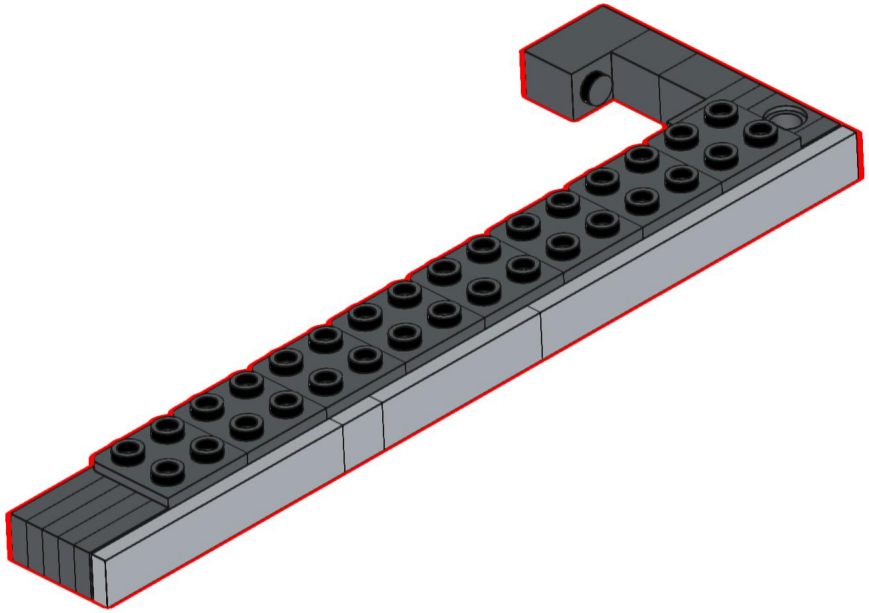

18

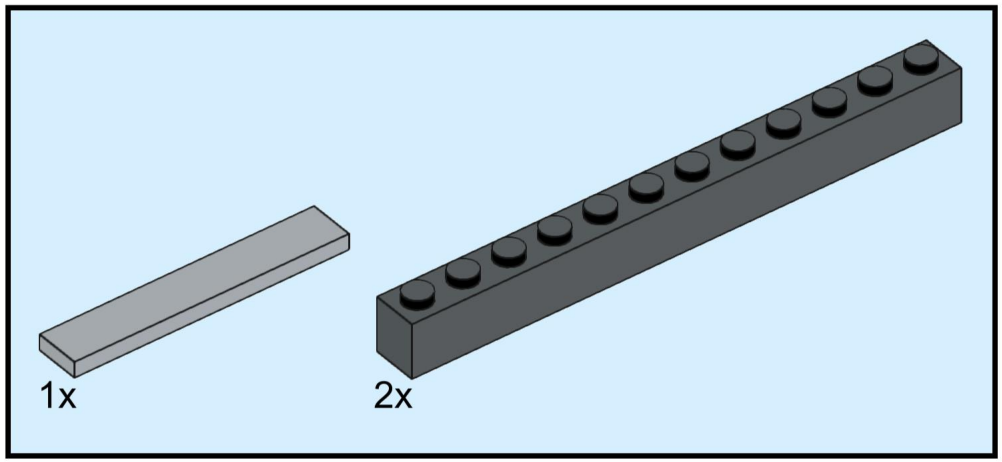

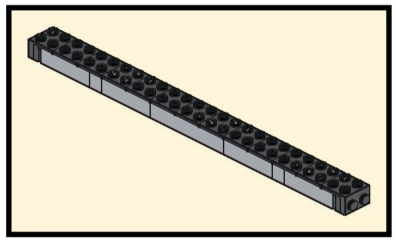

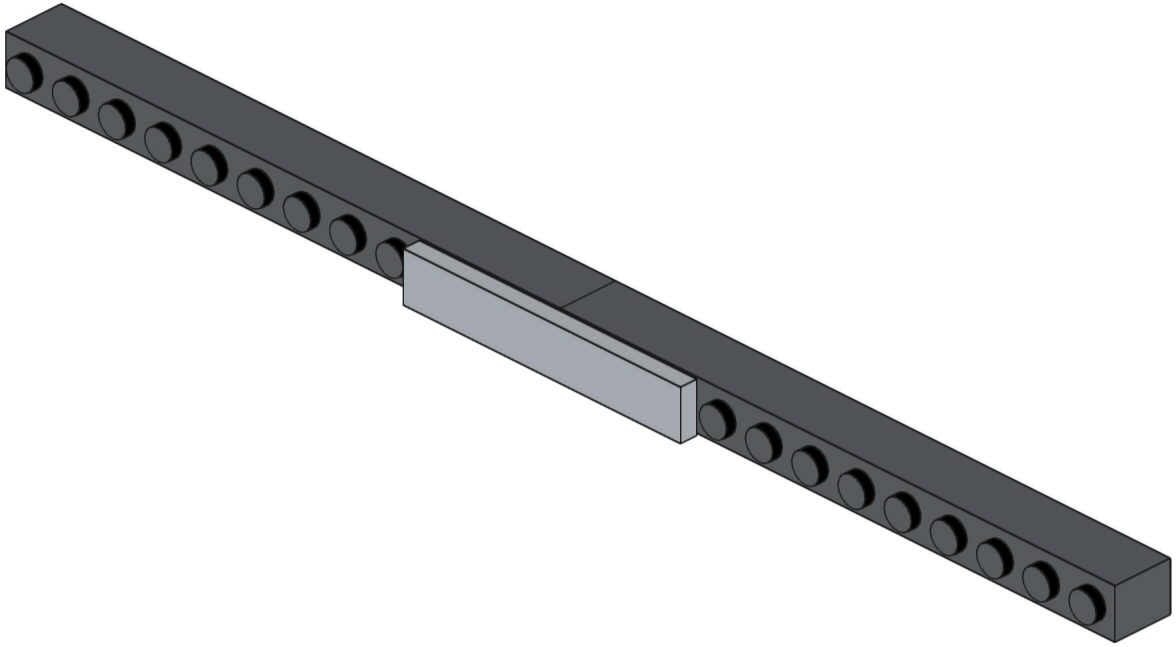

19

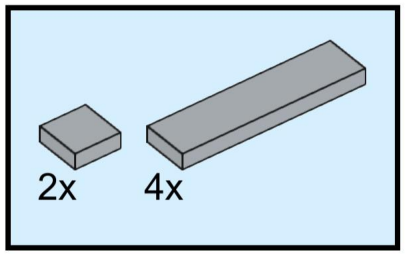

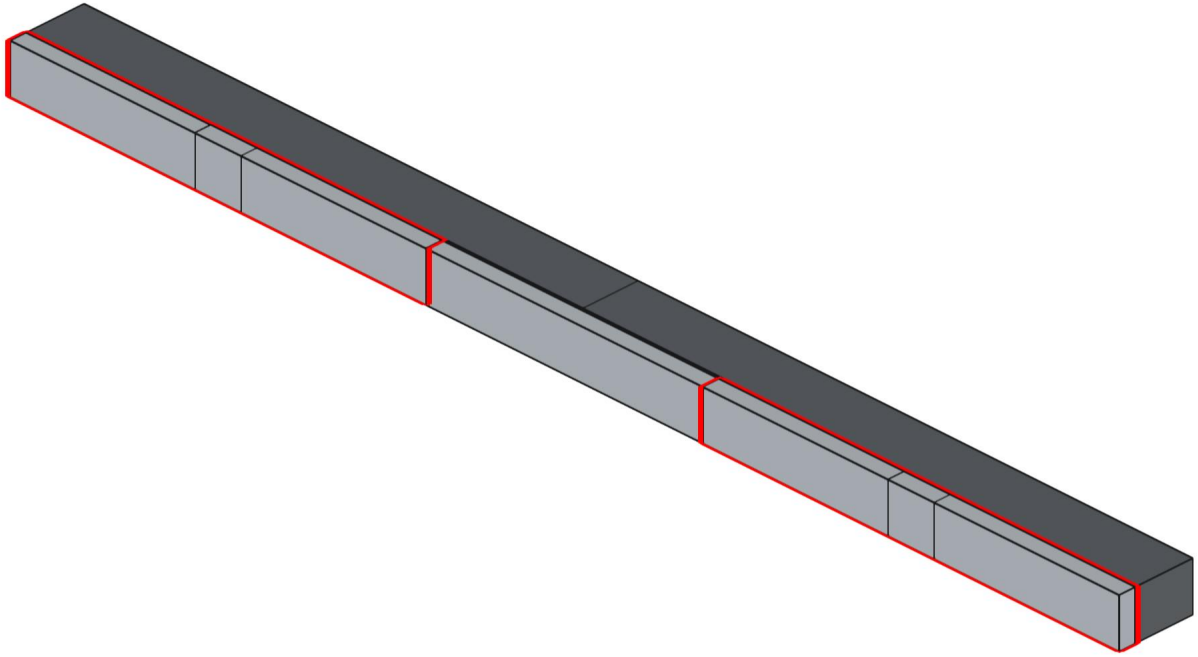

20

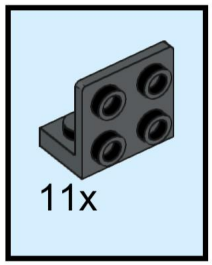

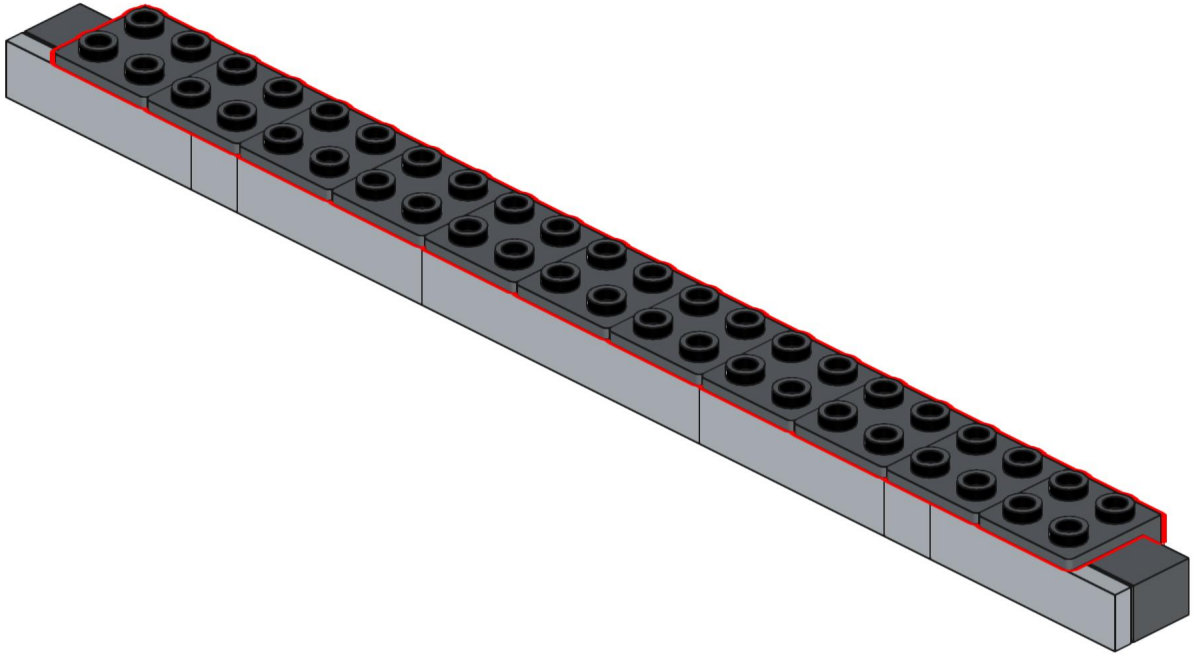

21

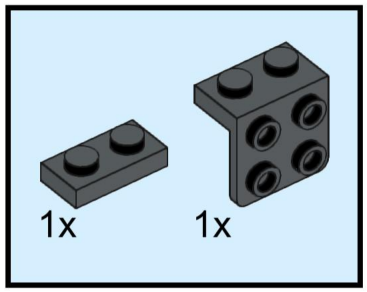

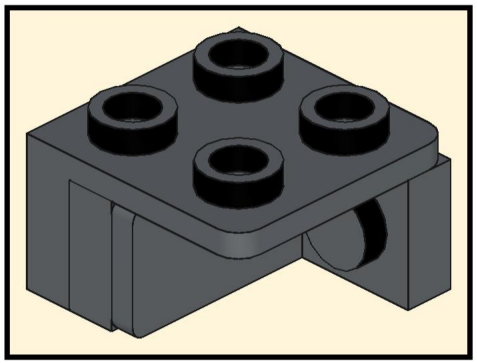

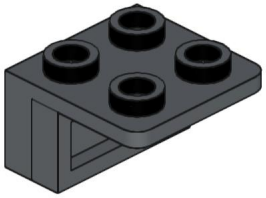

22

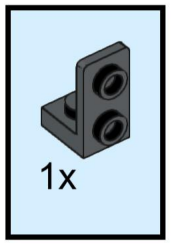

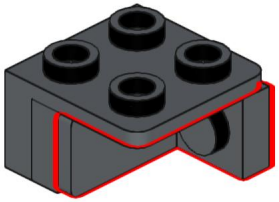

23

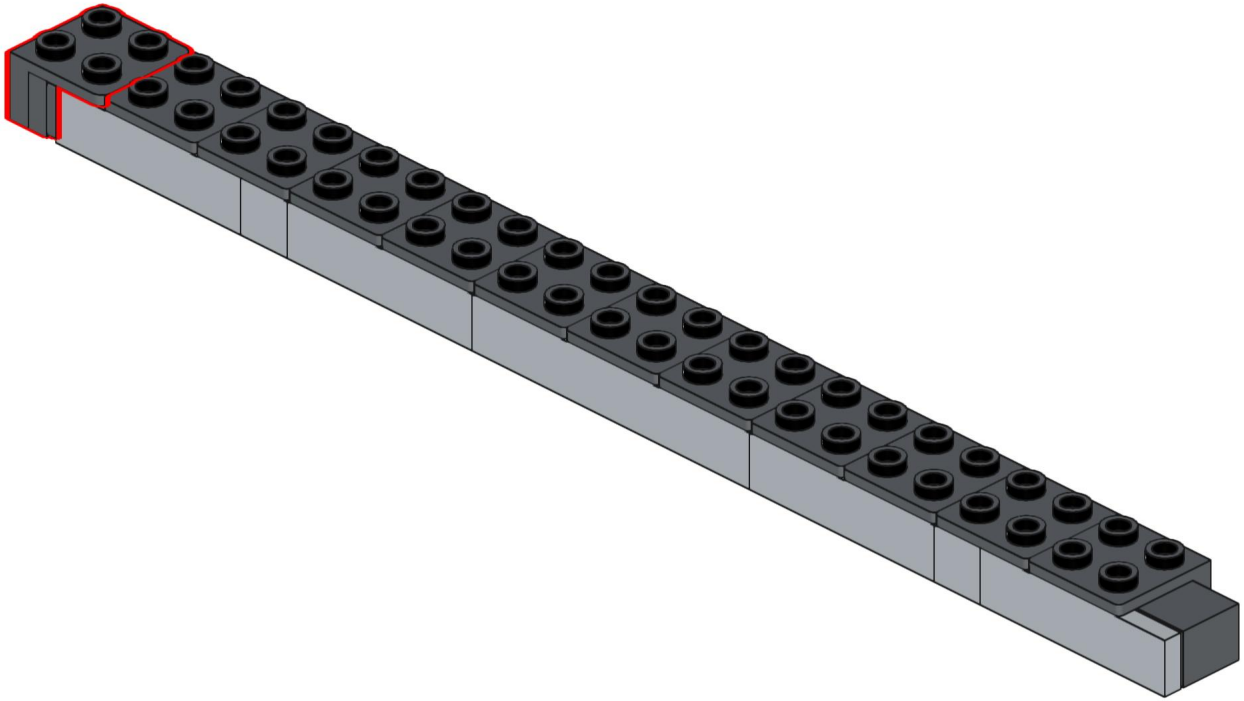

24

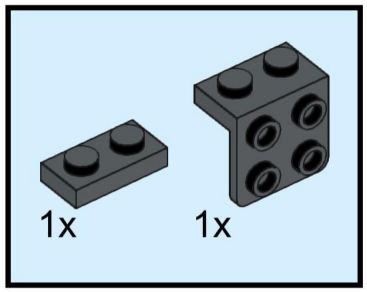

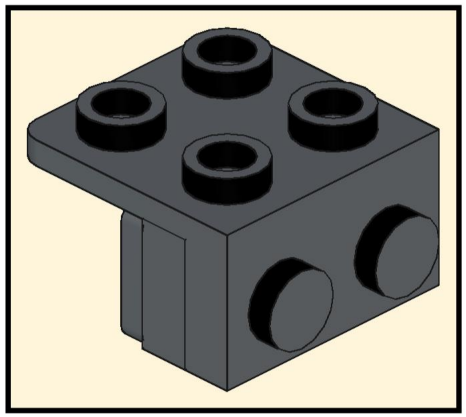

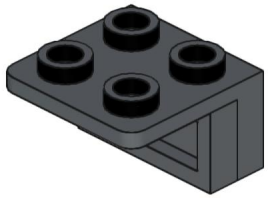

25

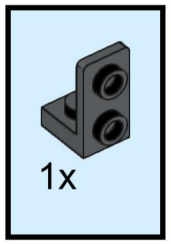

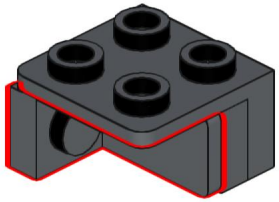

26

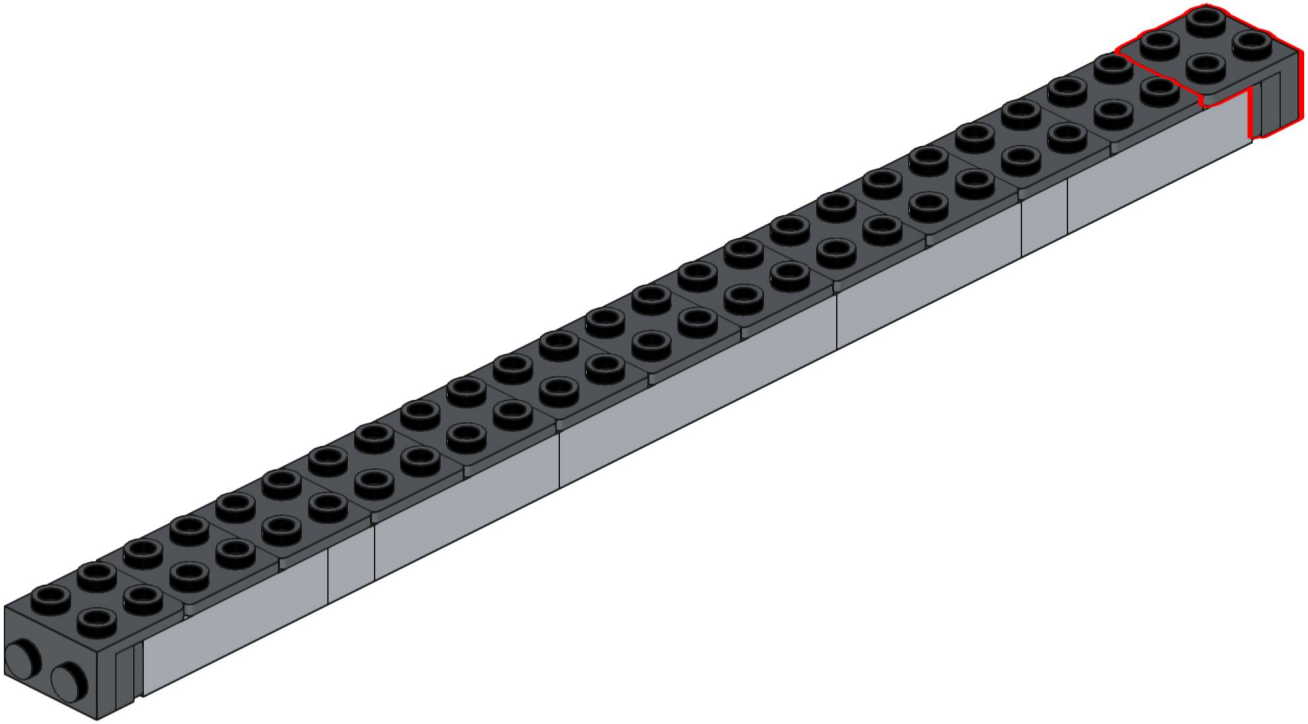

27

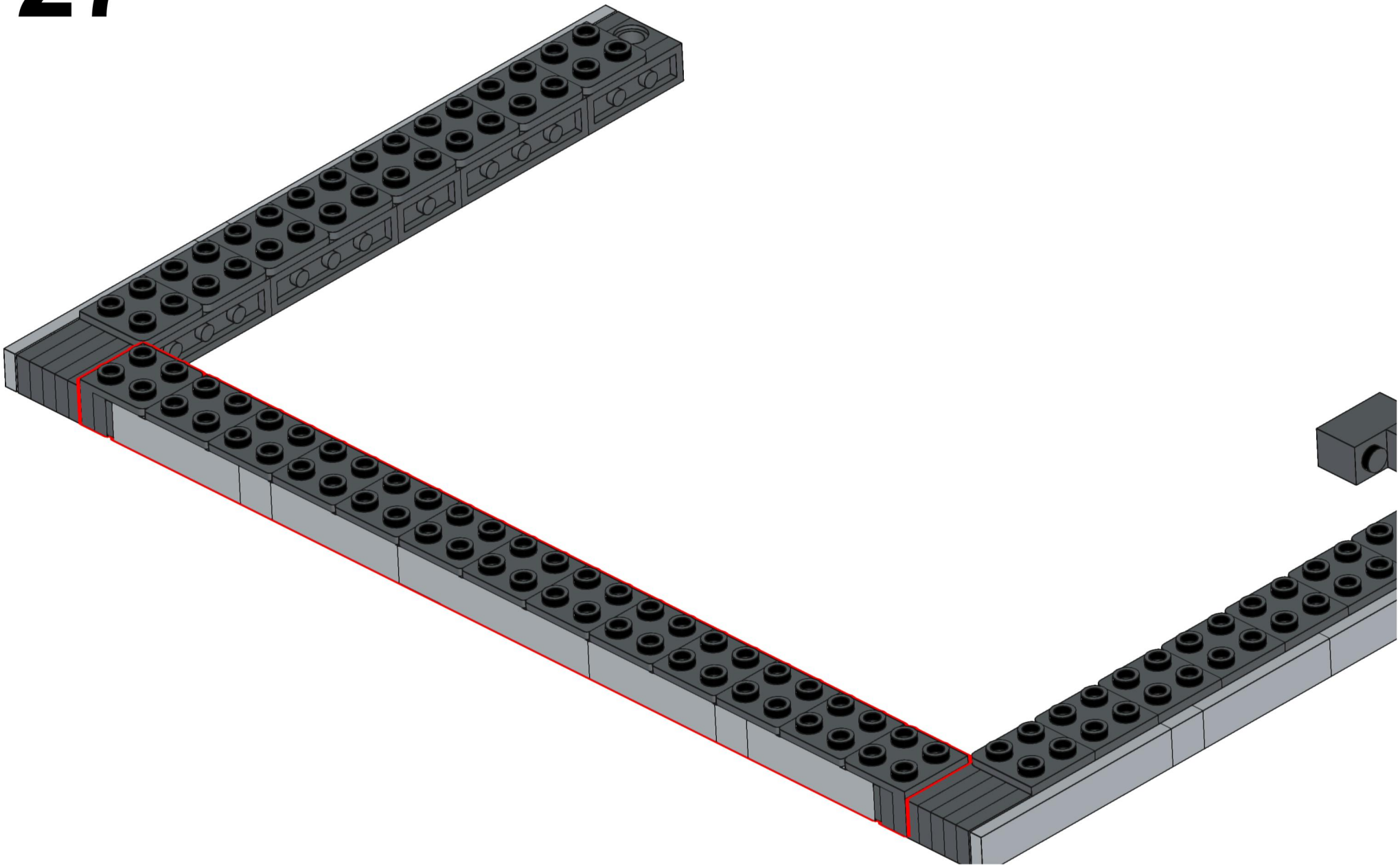

28

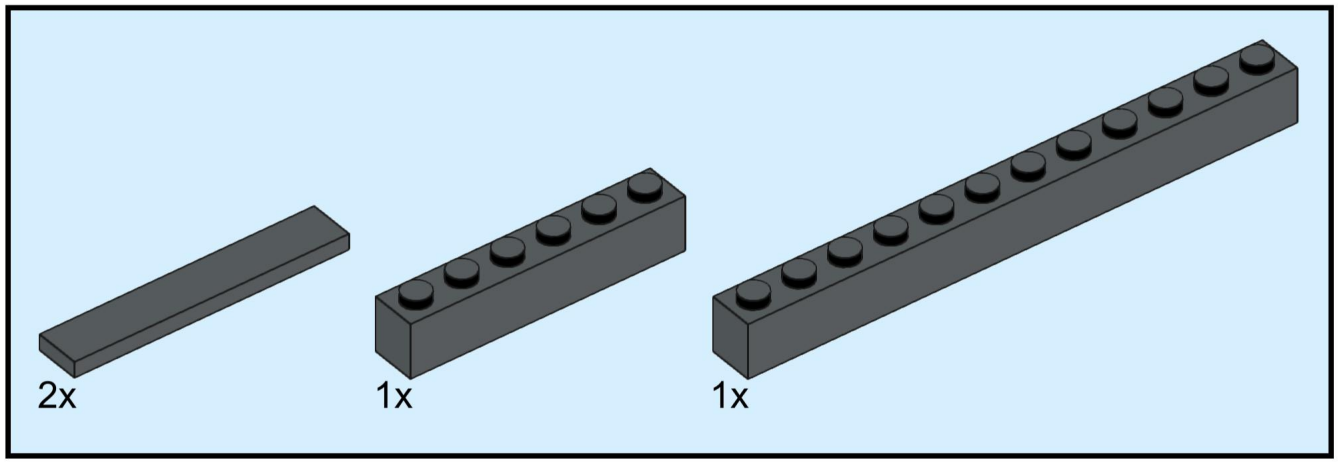

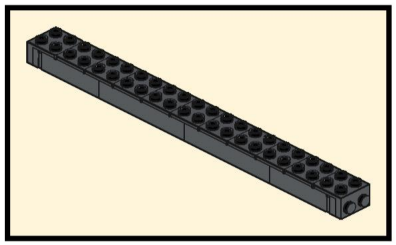

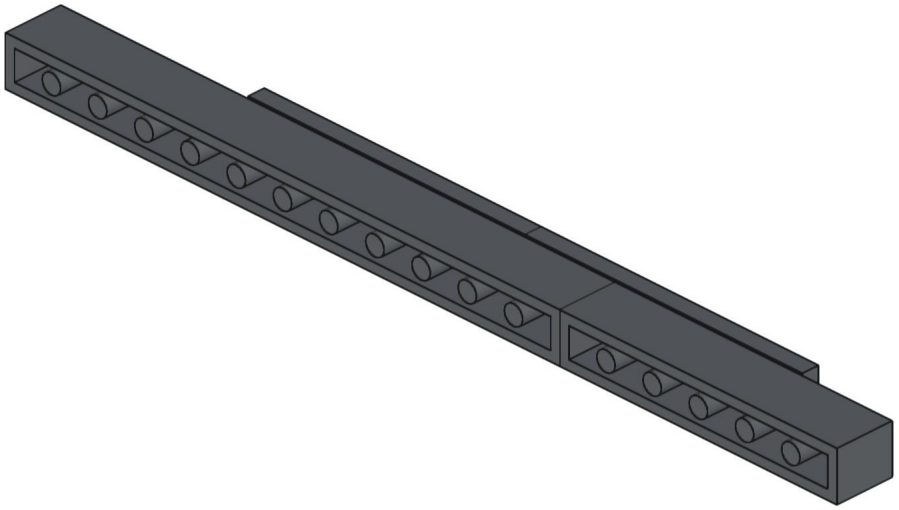

29

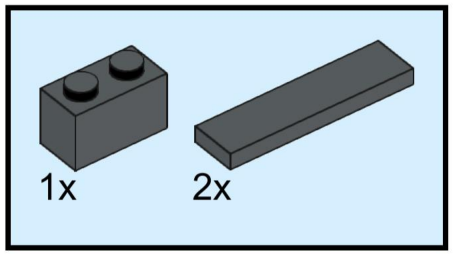

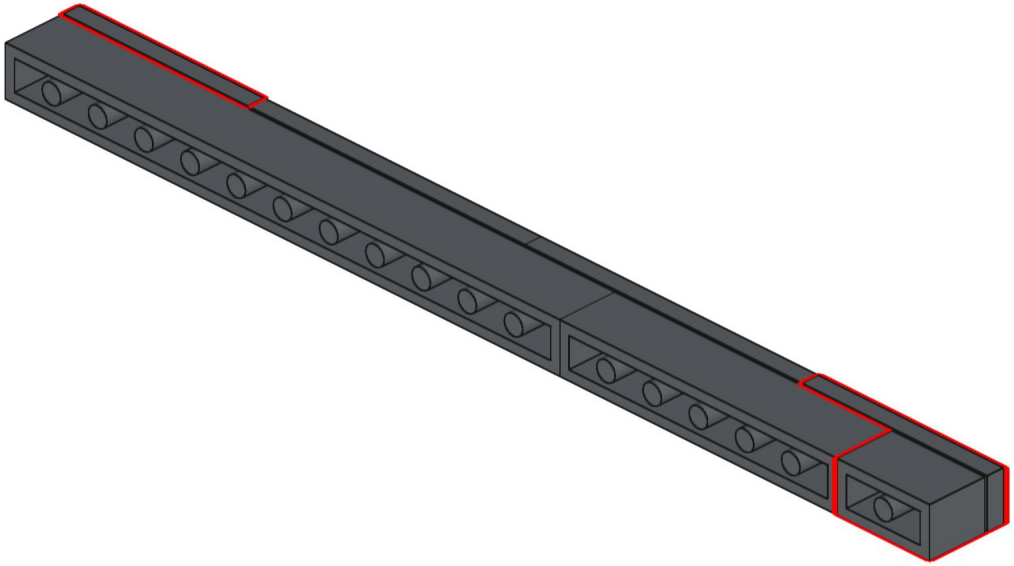

30

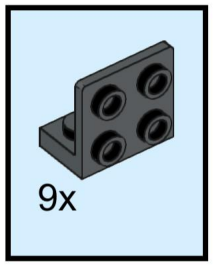

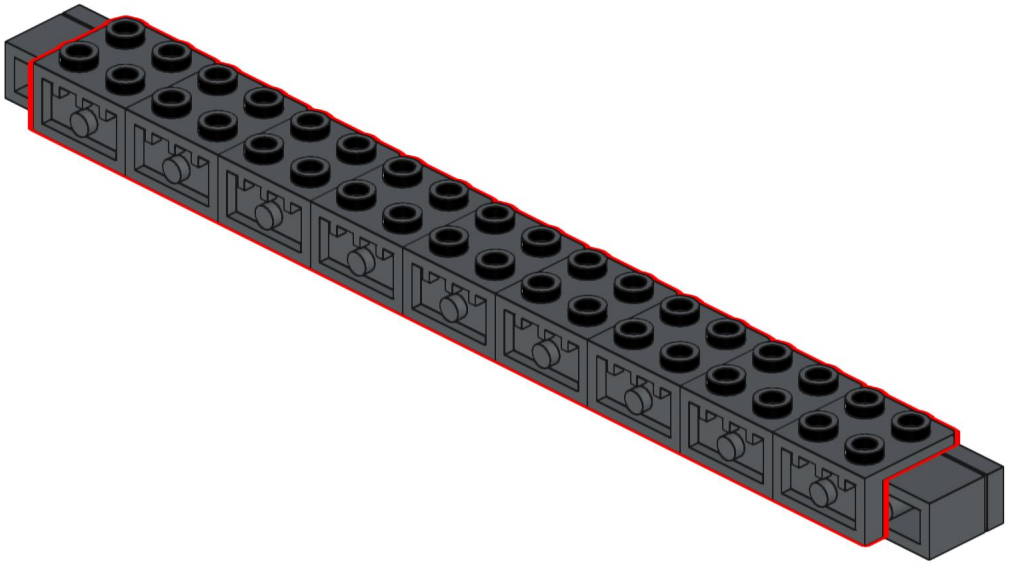

31

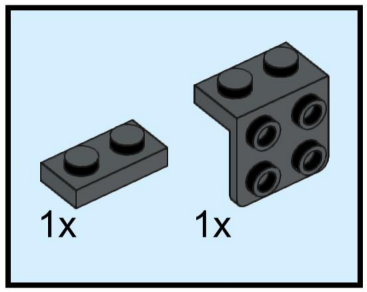

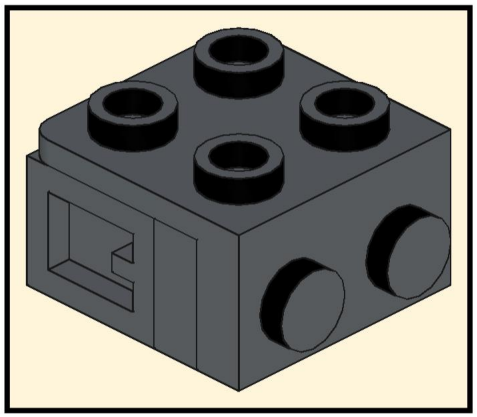

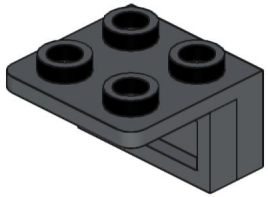

32

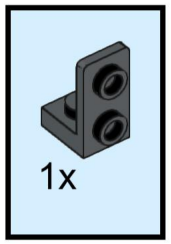

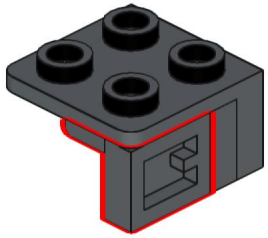

33

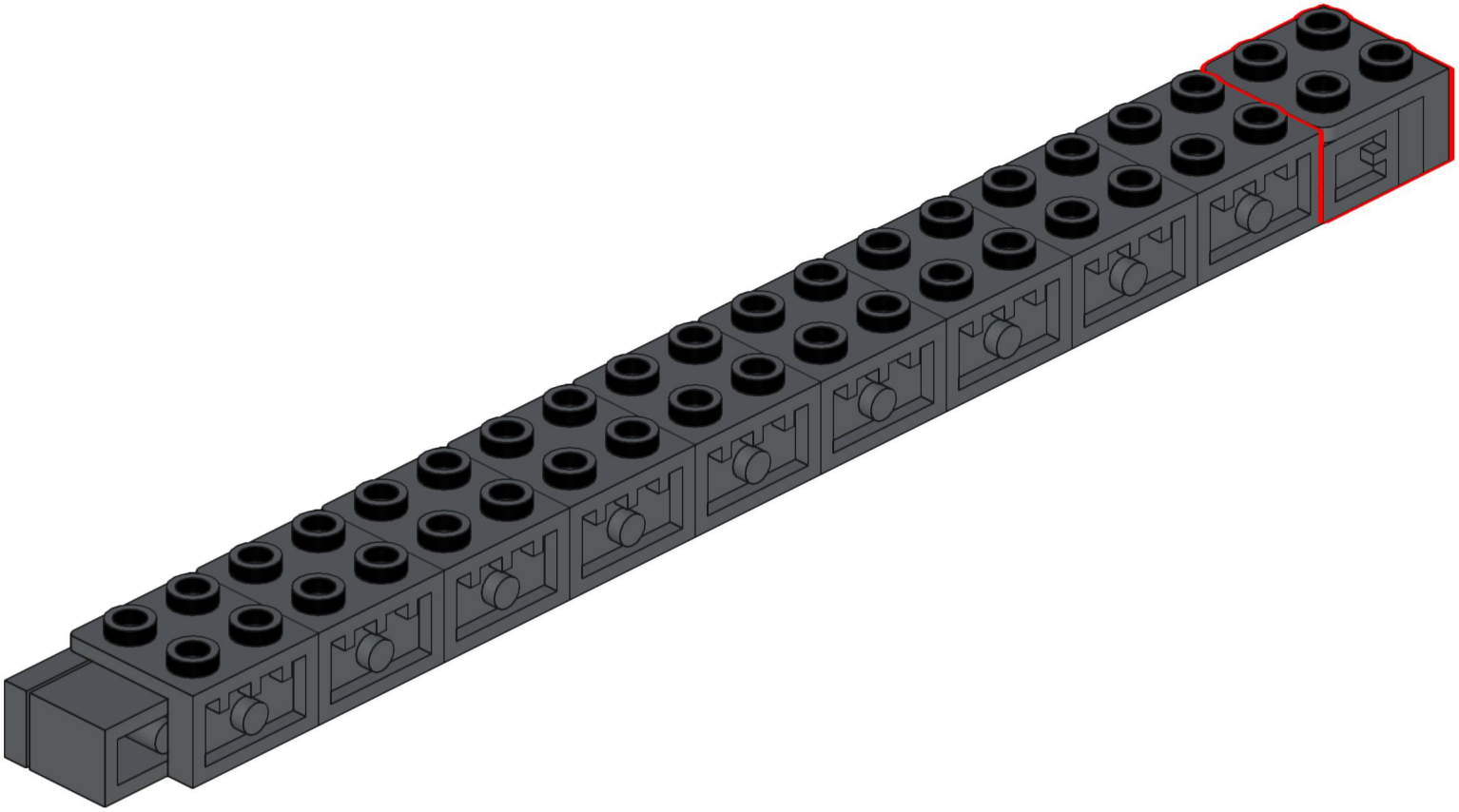

34

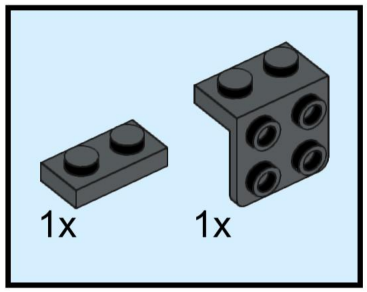

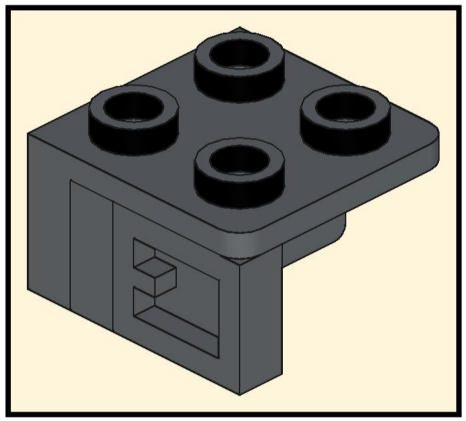

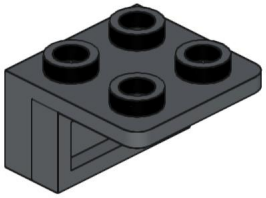

35

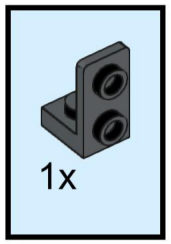

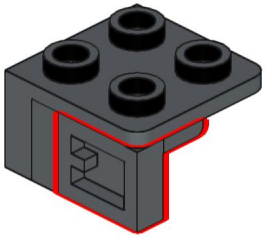

36

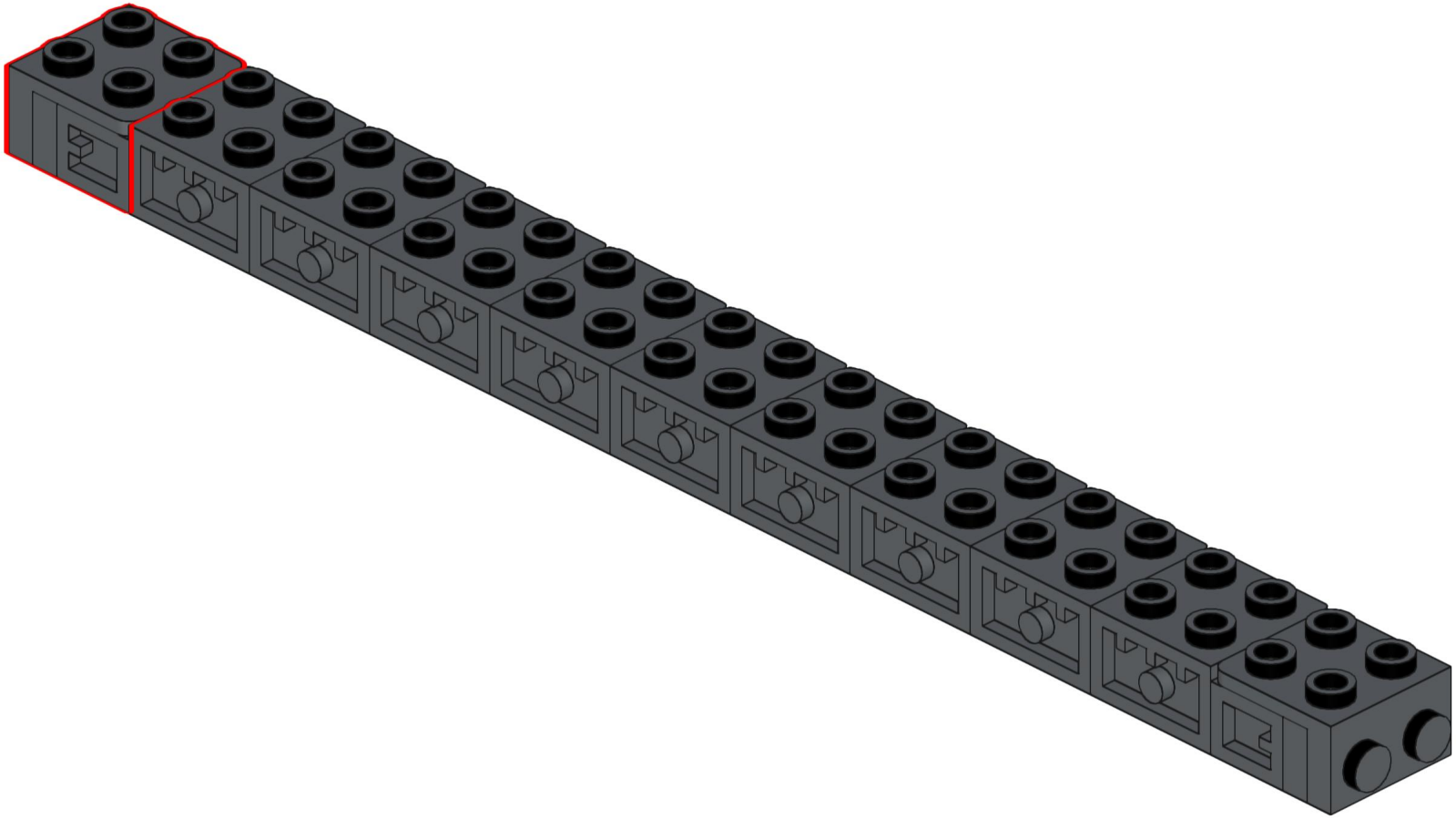

37

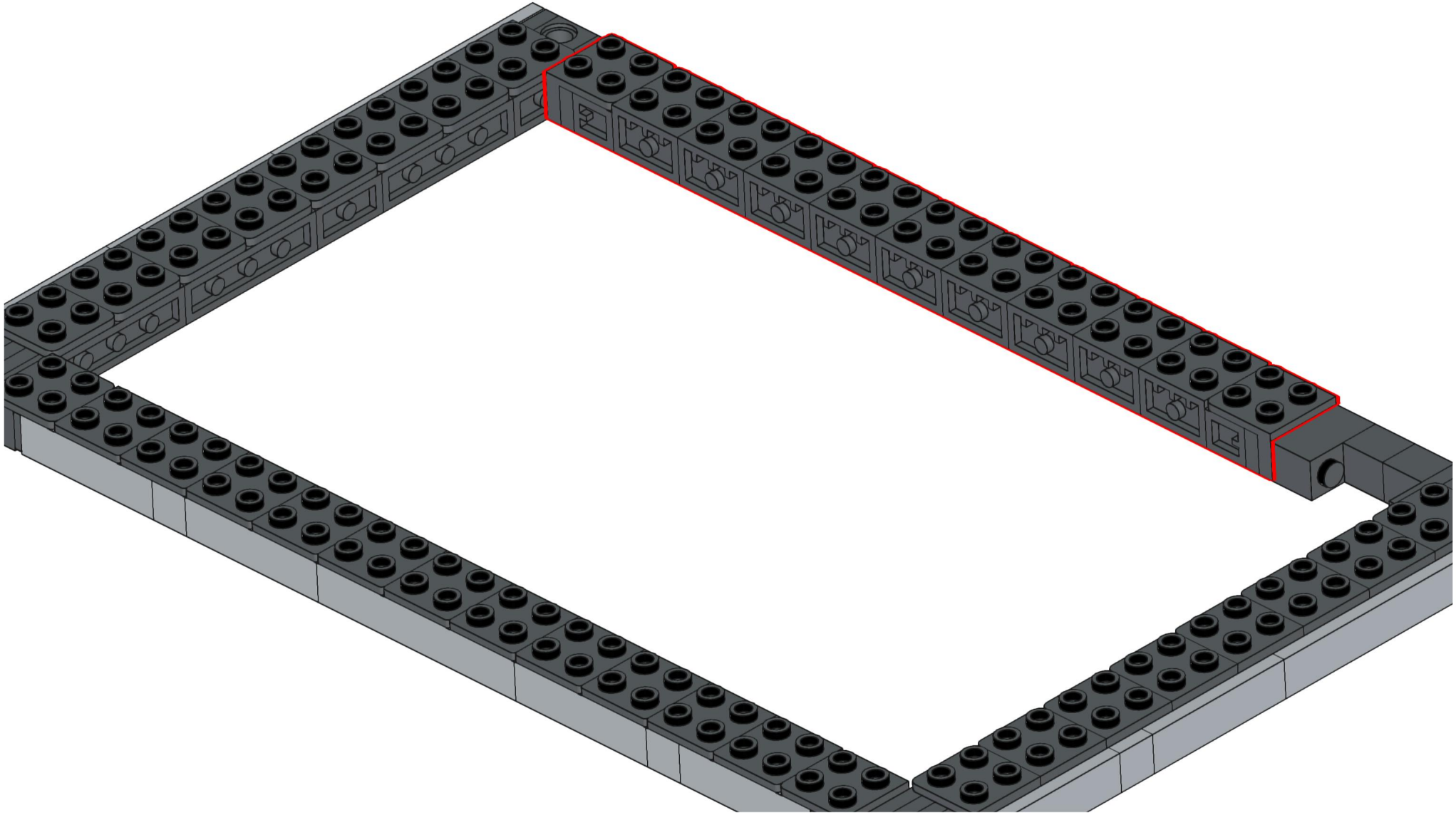

38

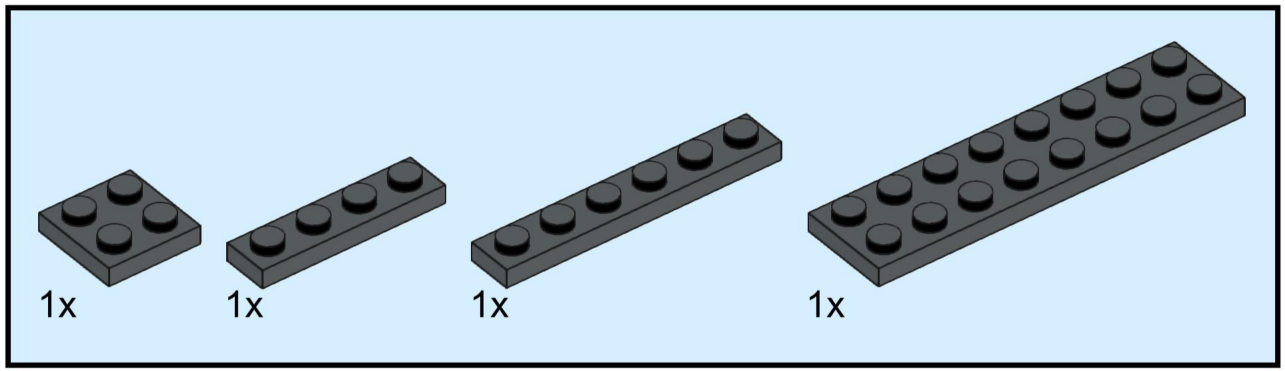

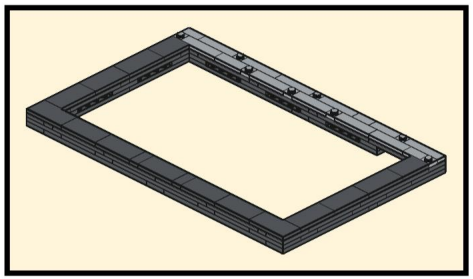

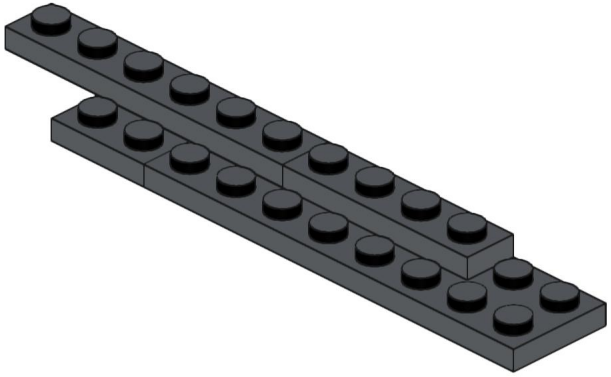

39

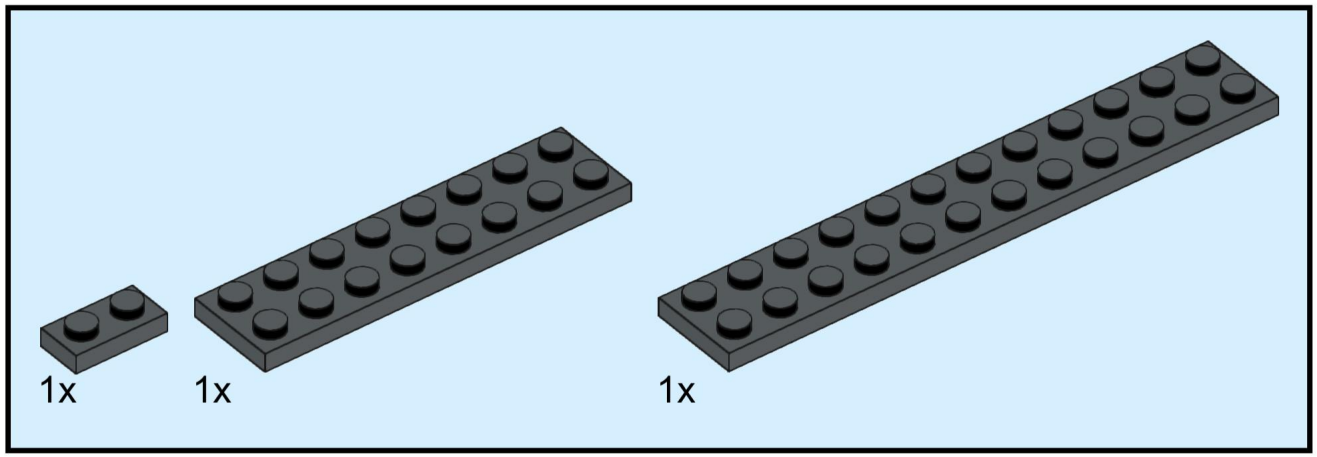

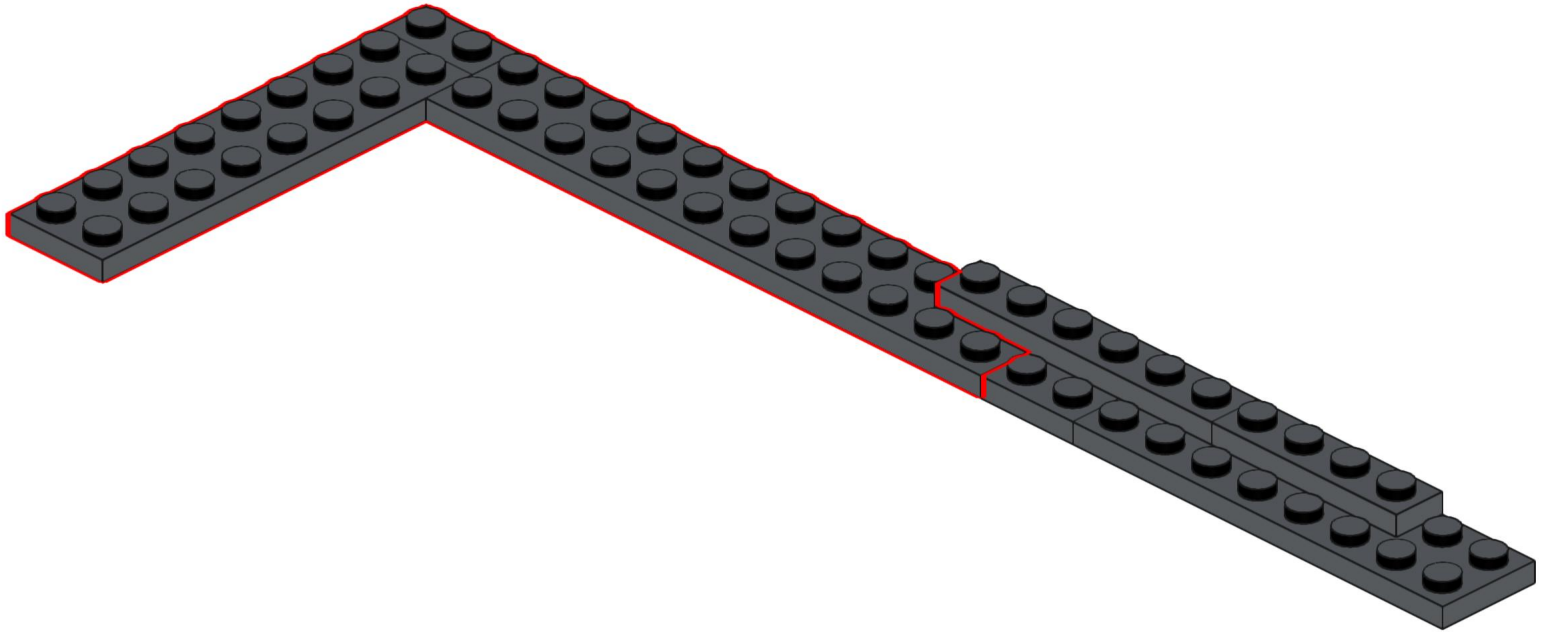

40

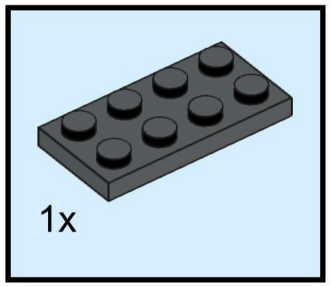

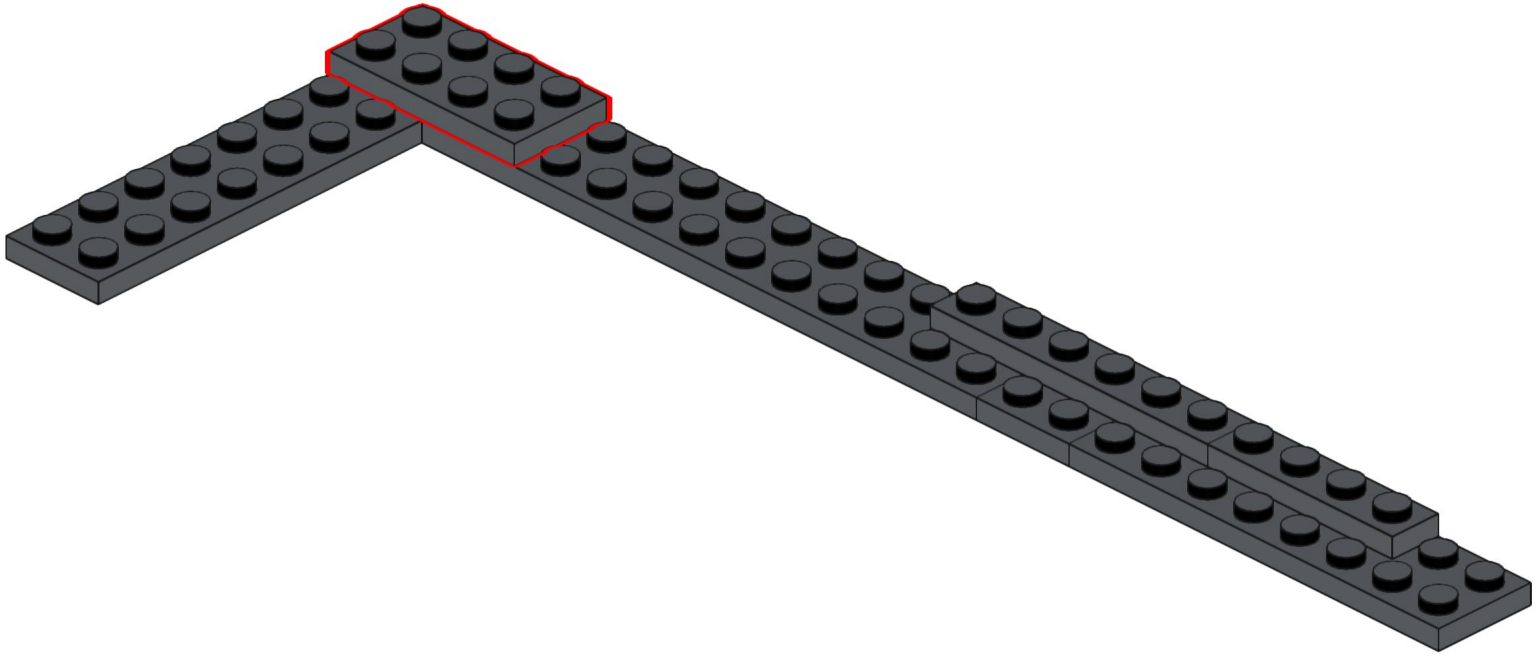

41

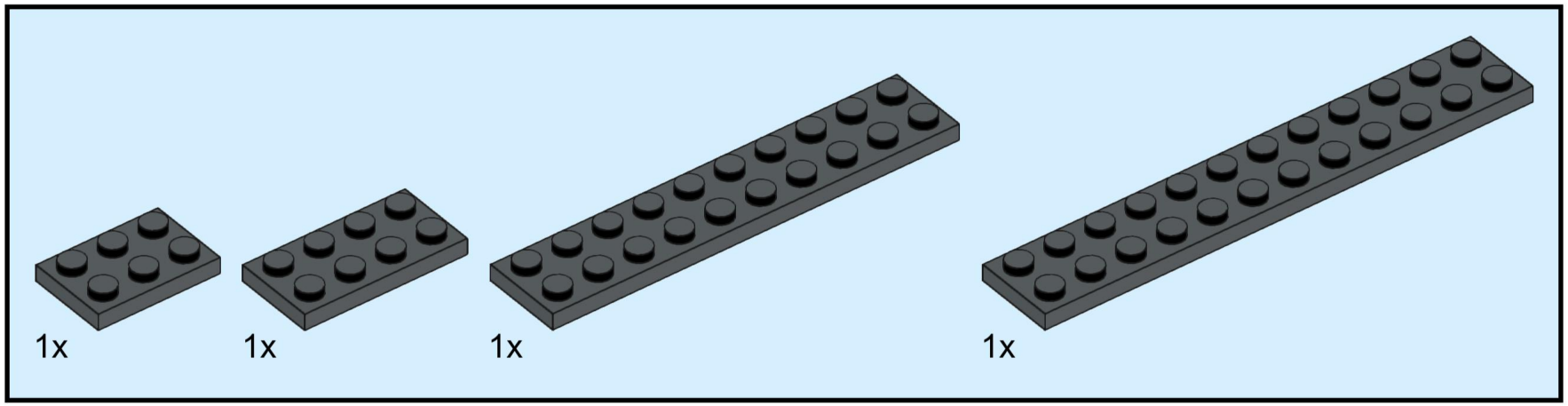

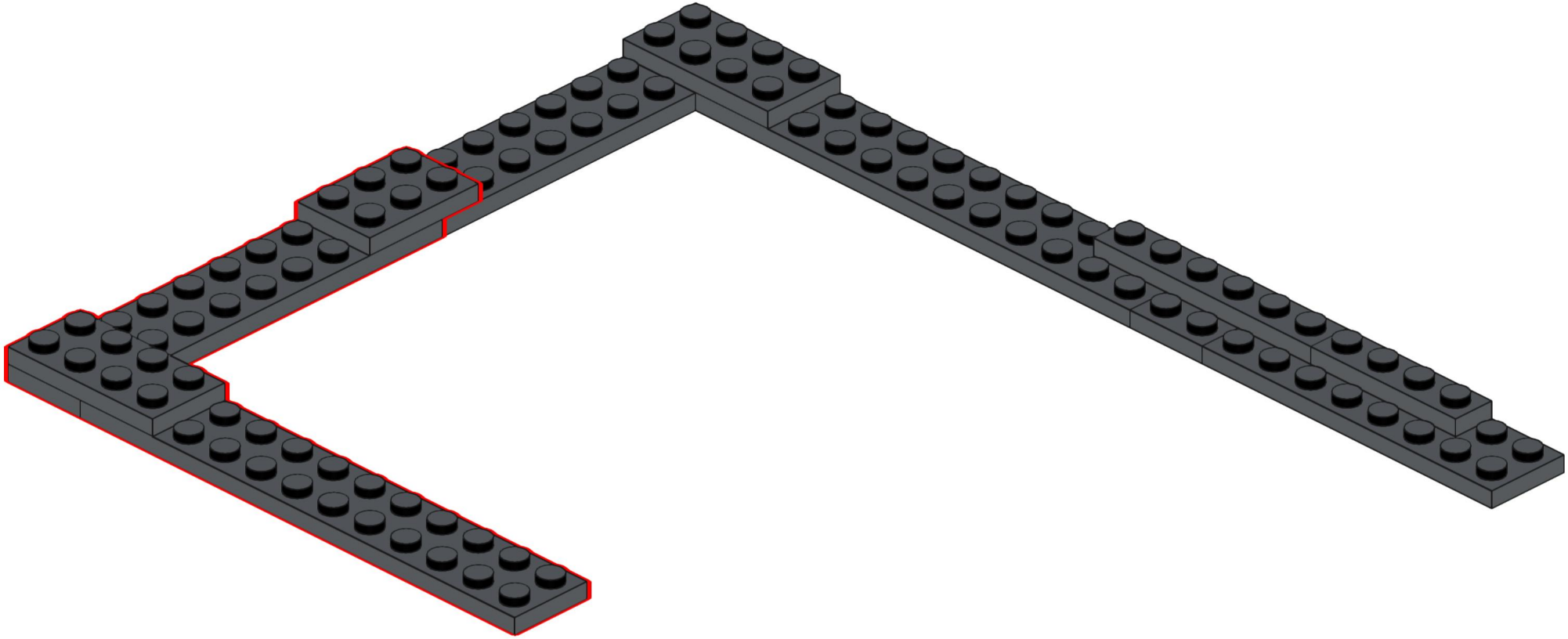

42

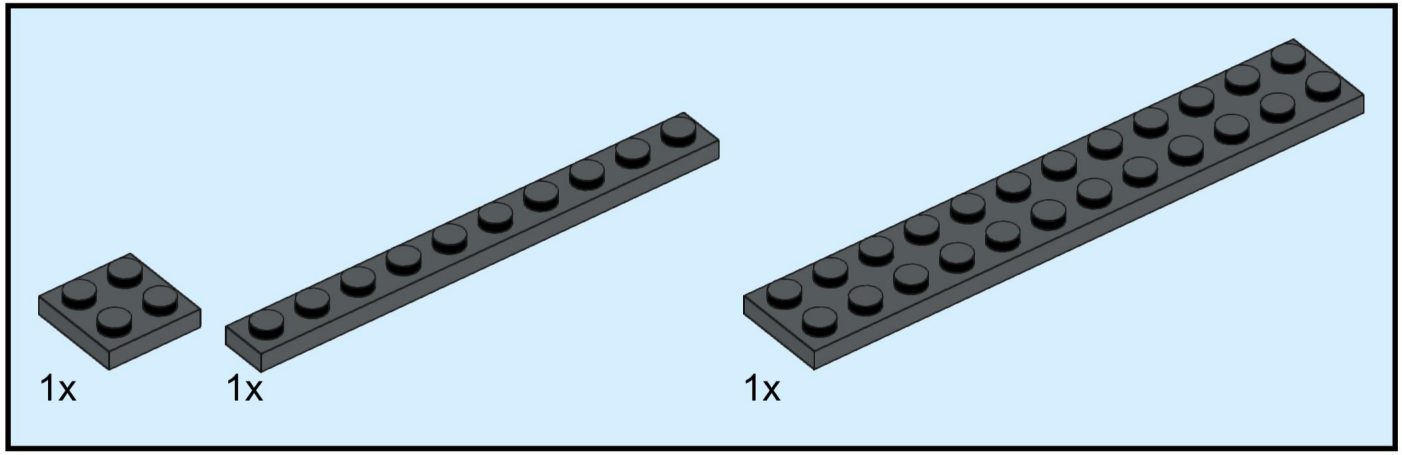

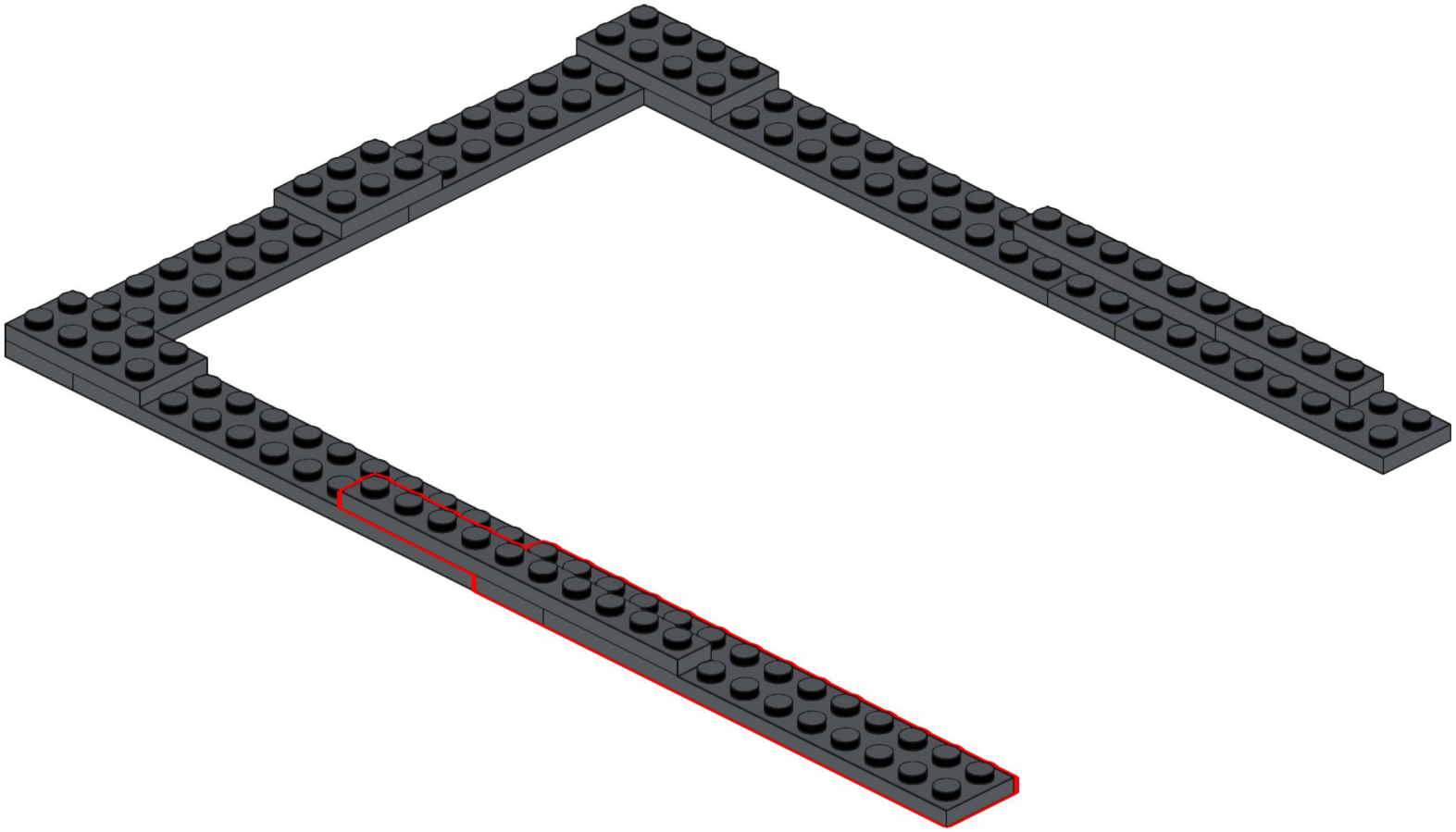

43

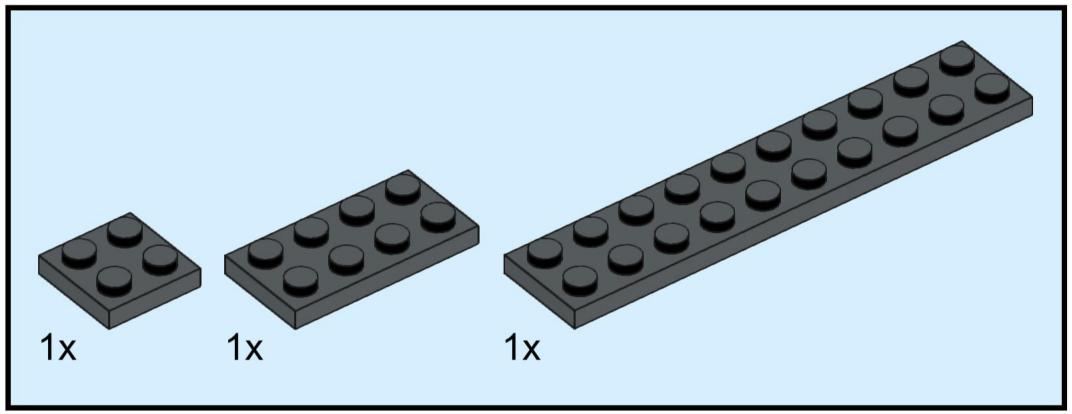

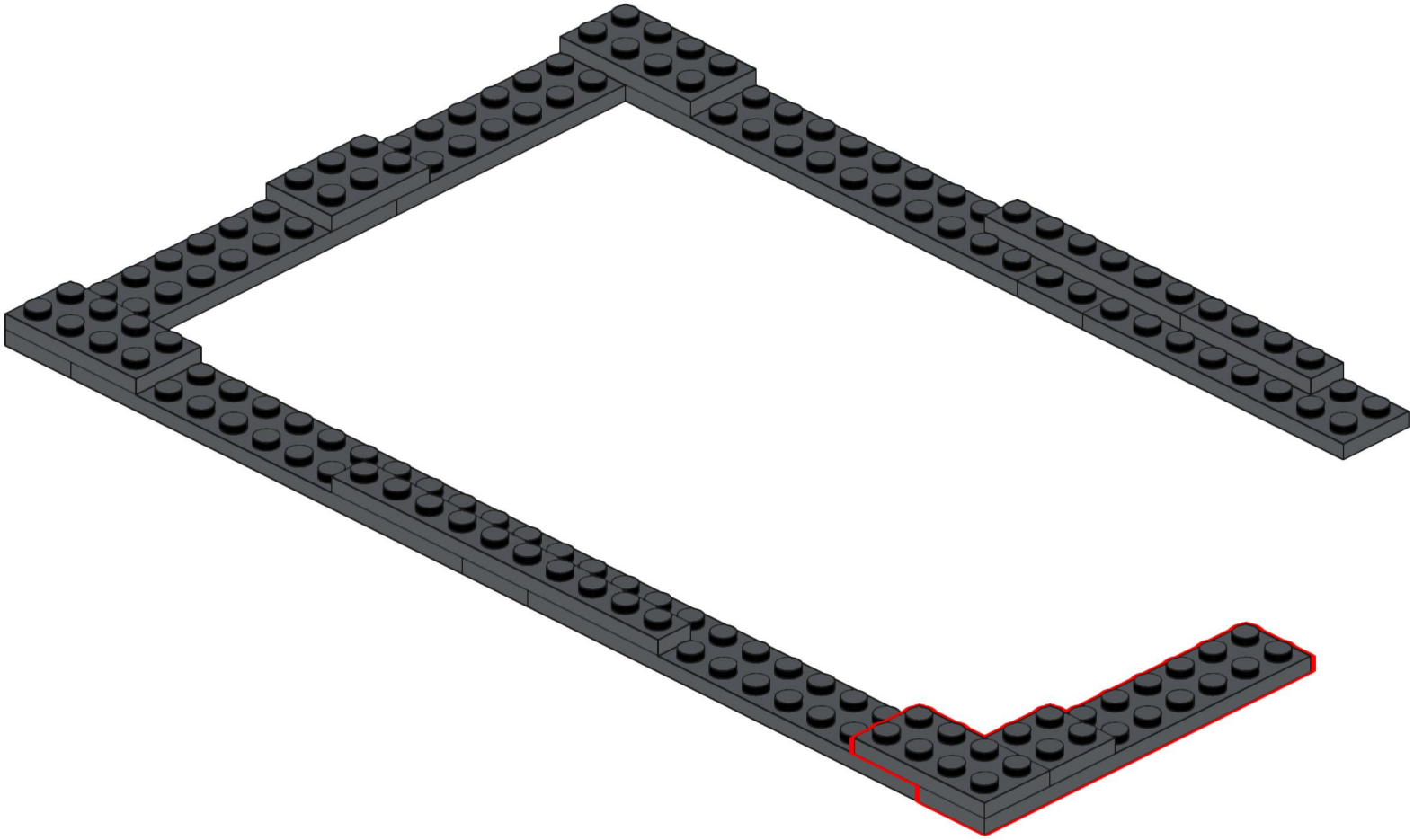

44

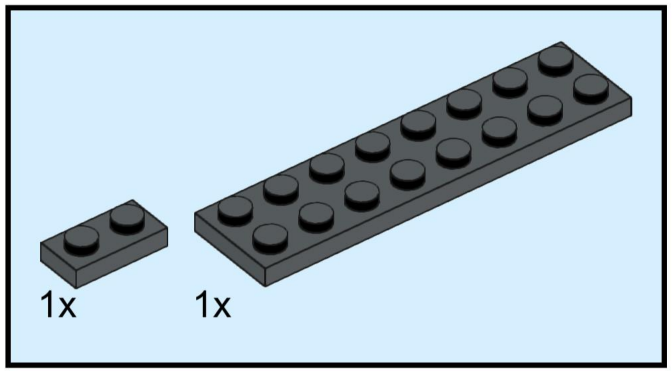

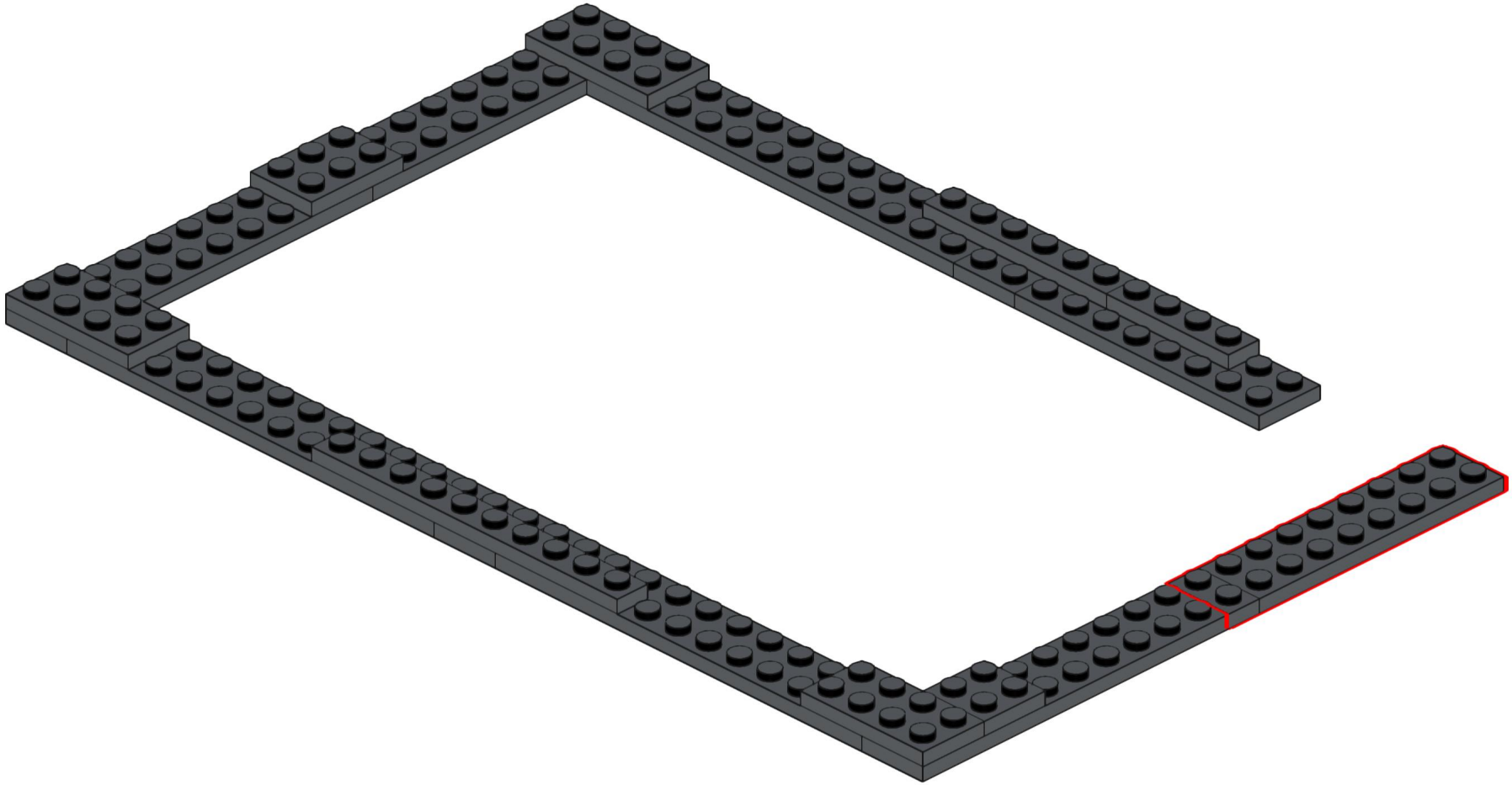

45

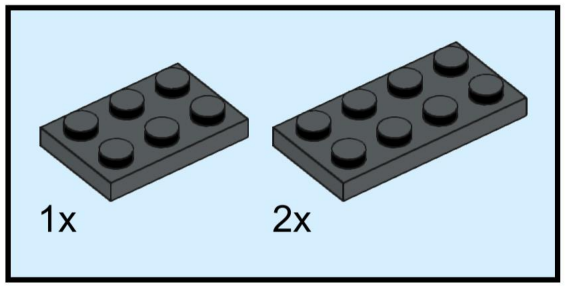

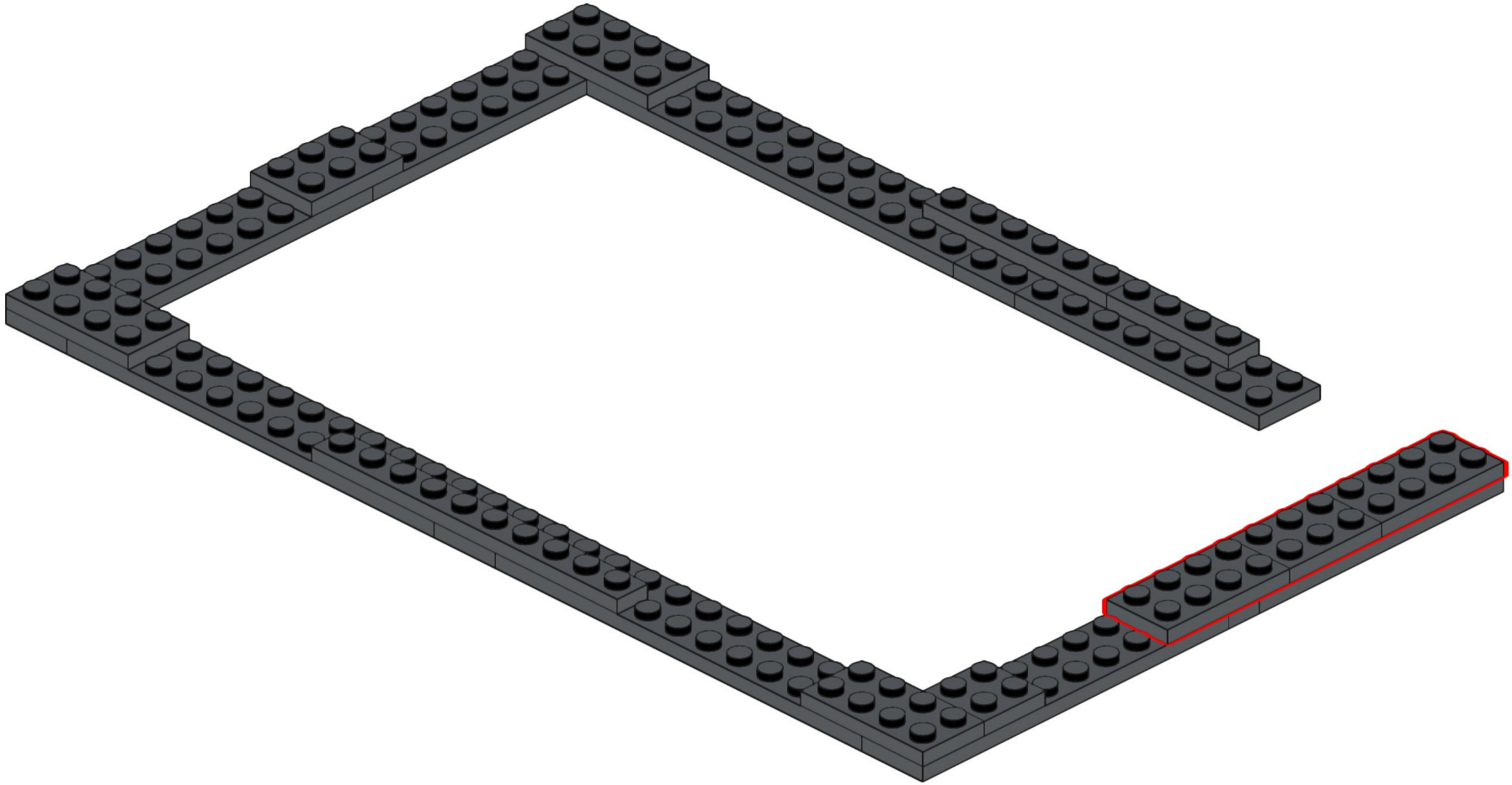

46

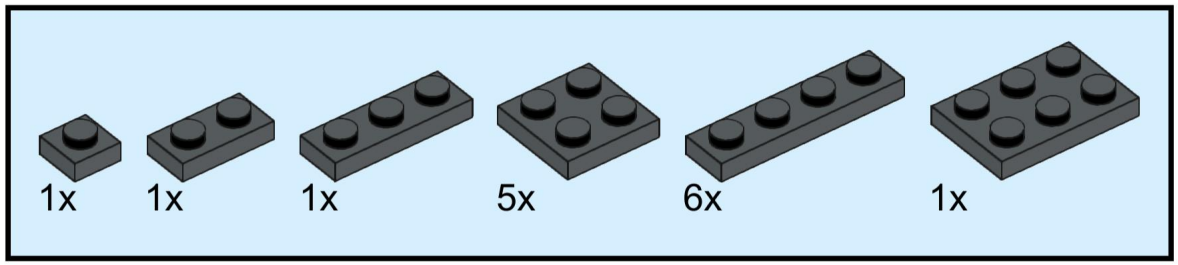

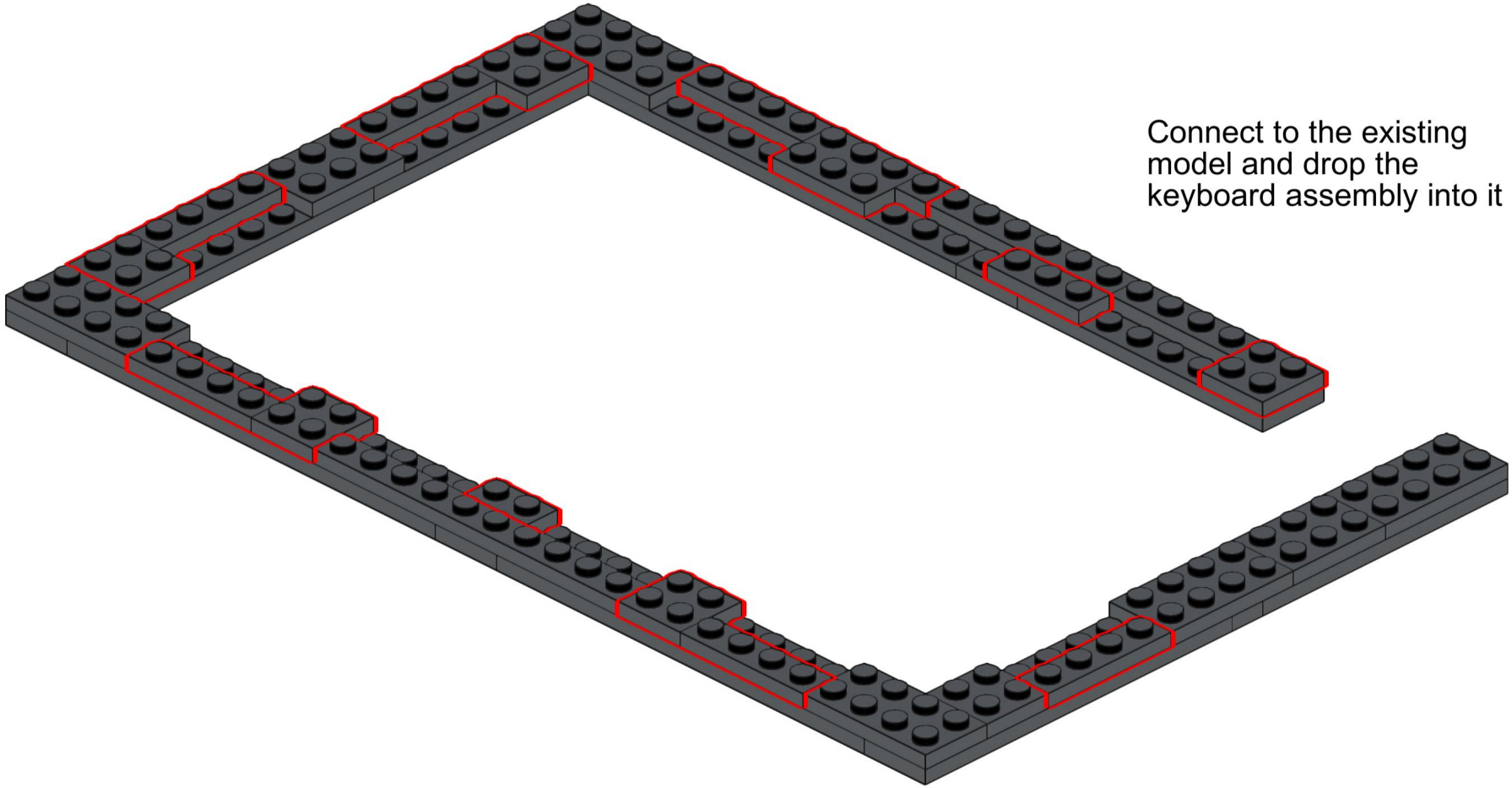

Connect to the existing model and drop the keyboard assembly into it

47

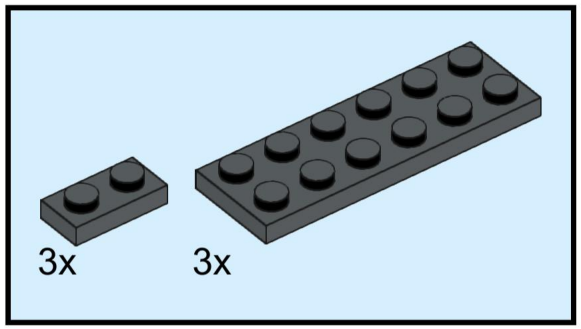

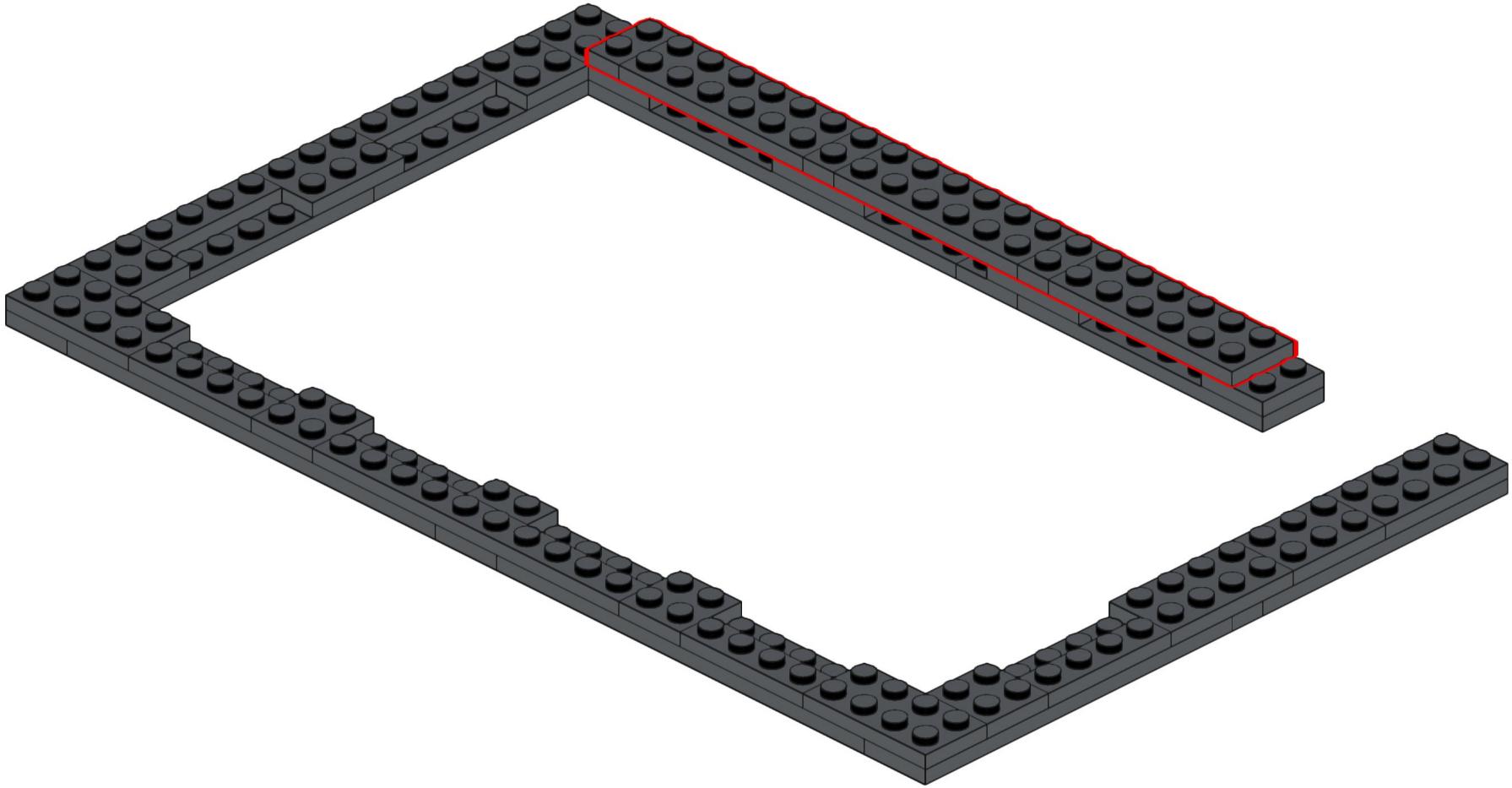

48

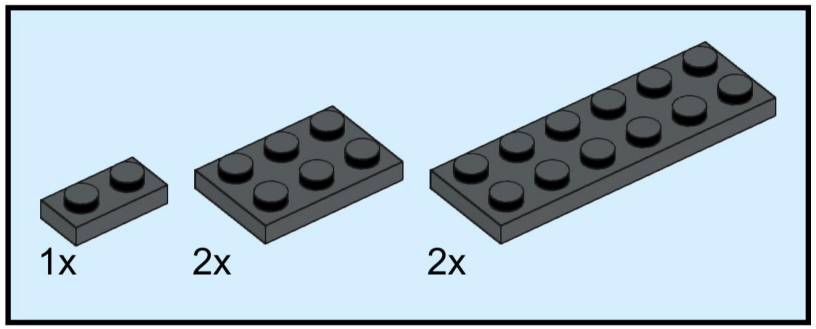

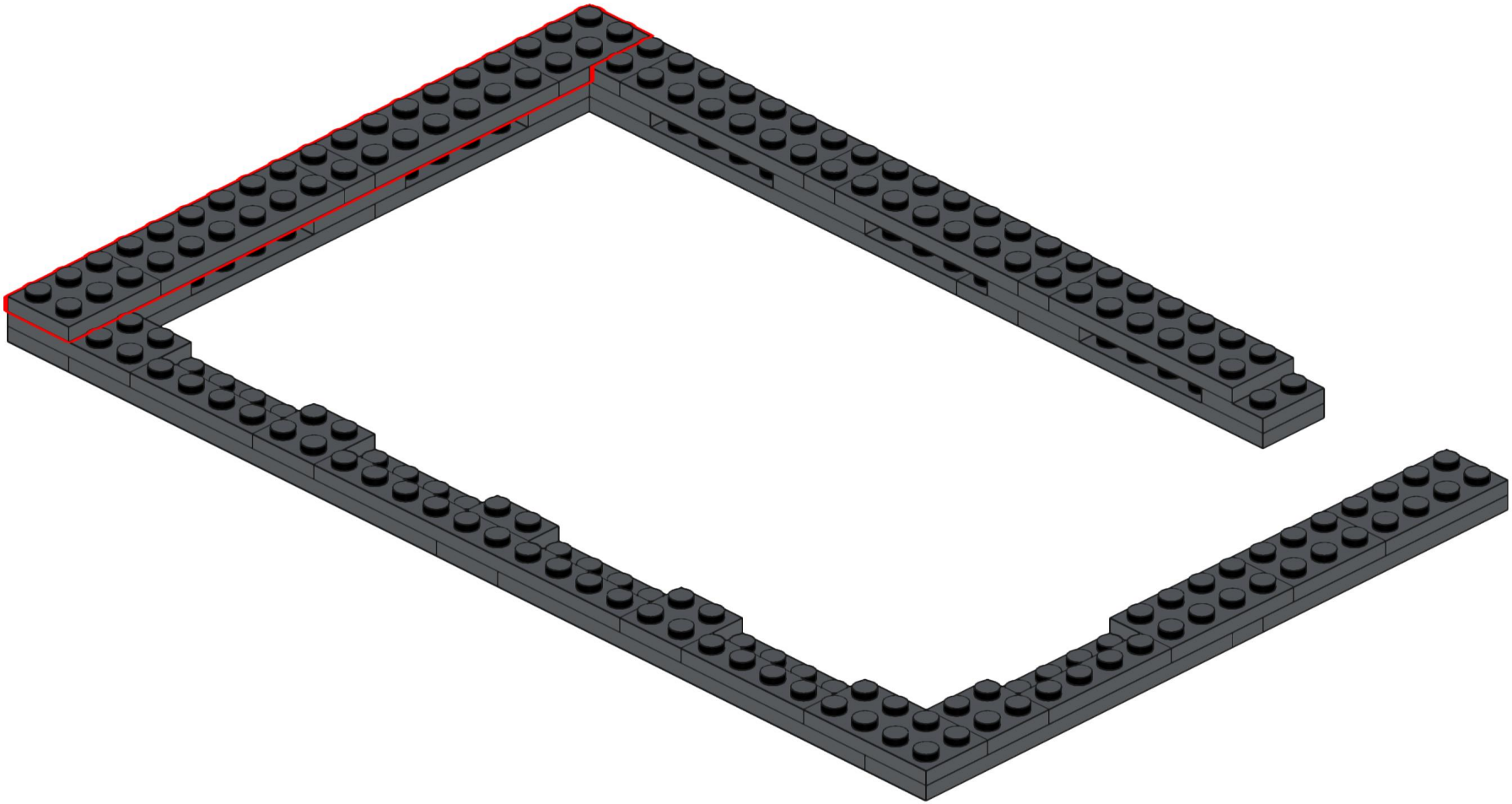

49

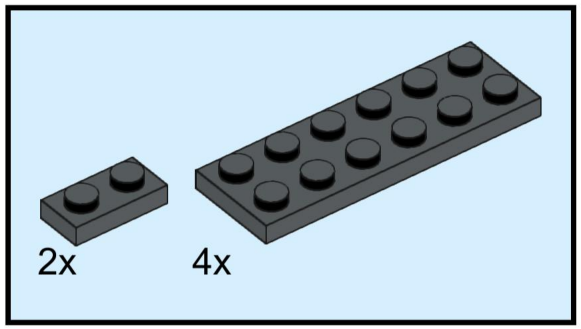

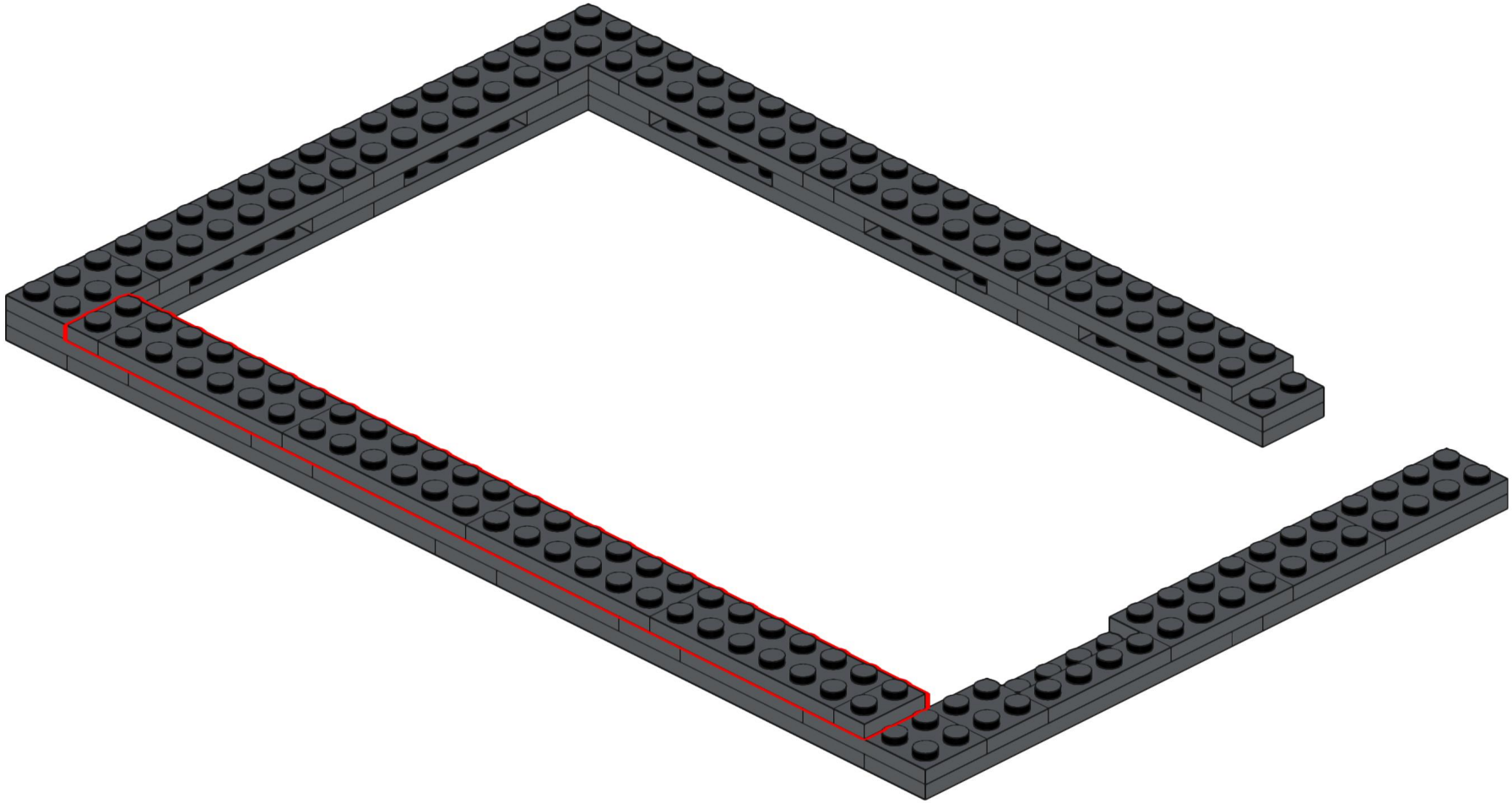

50

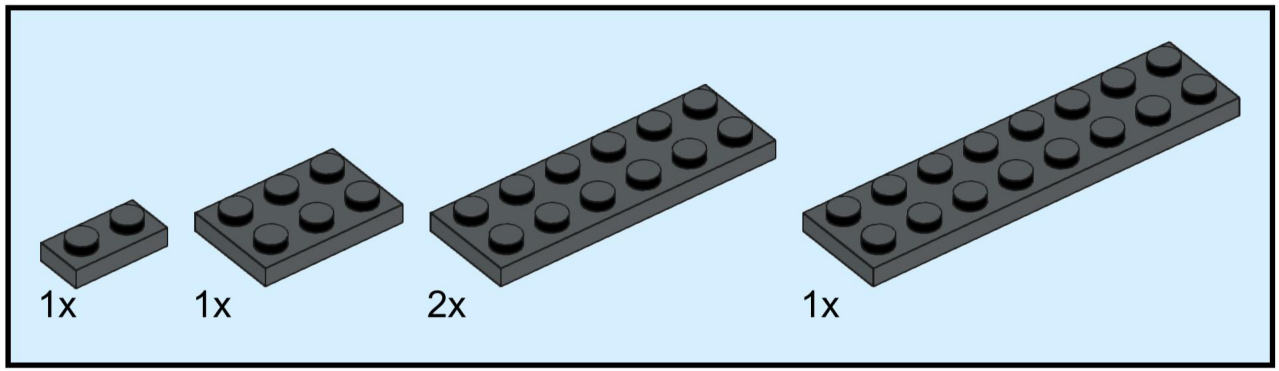

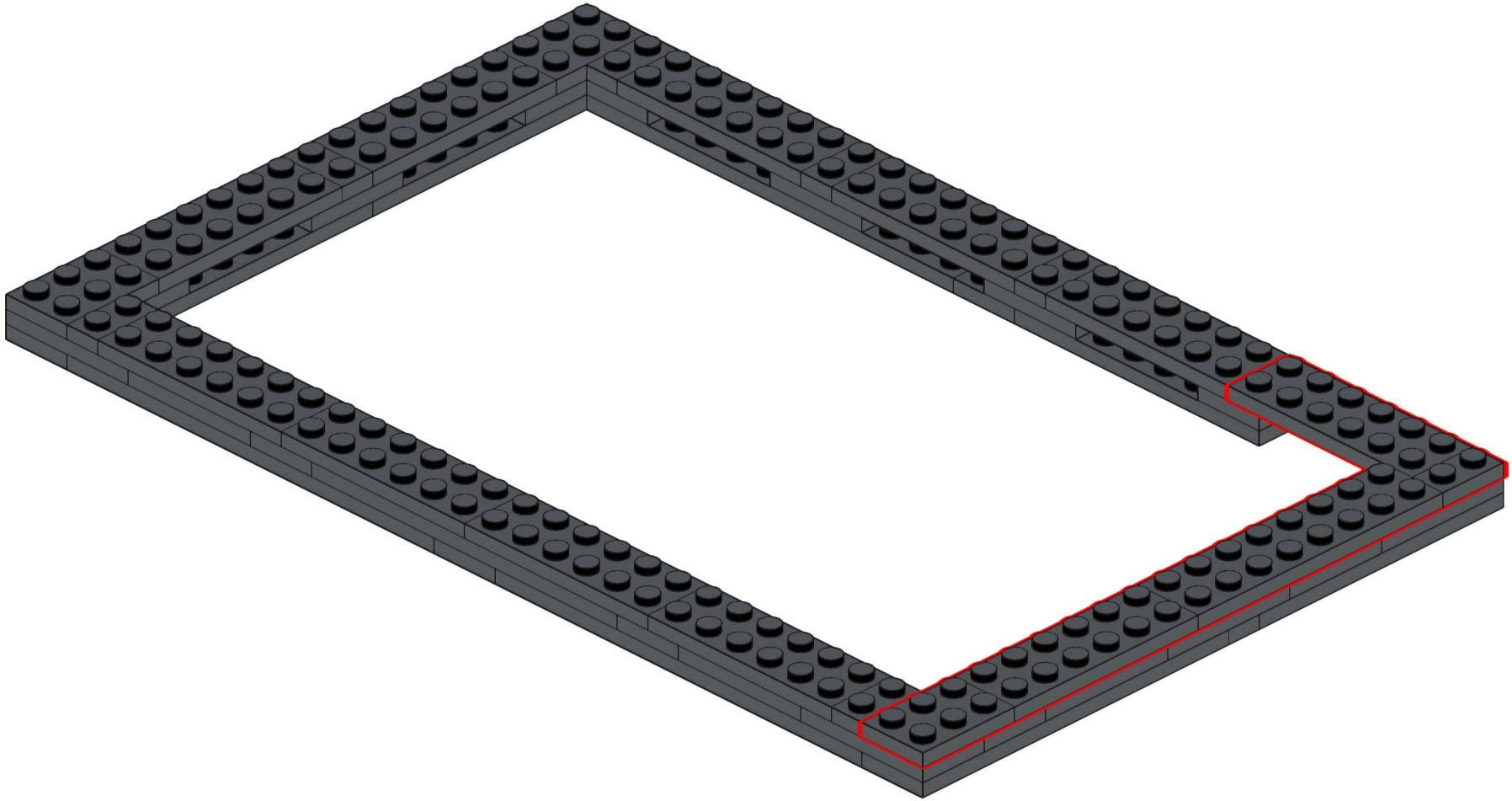

51

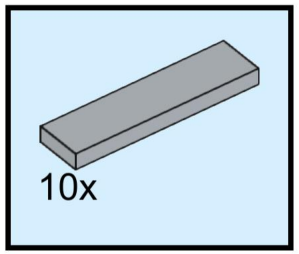

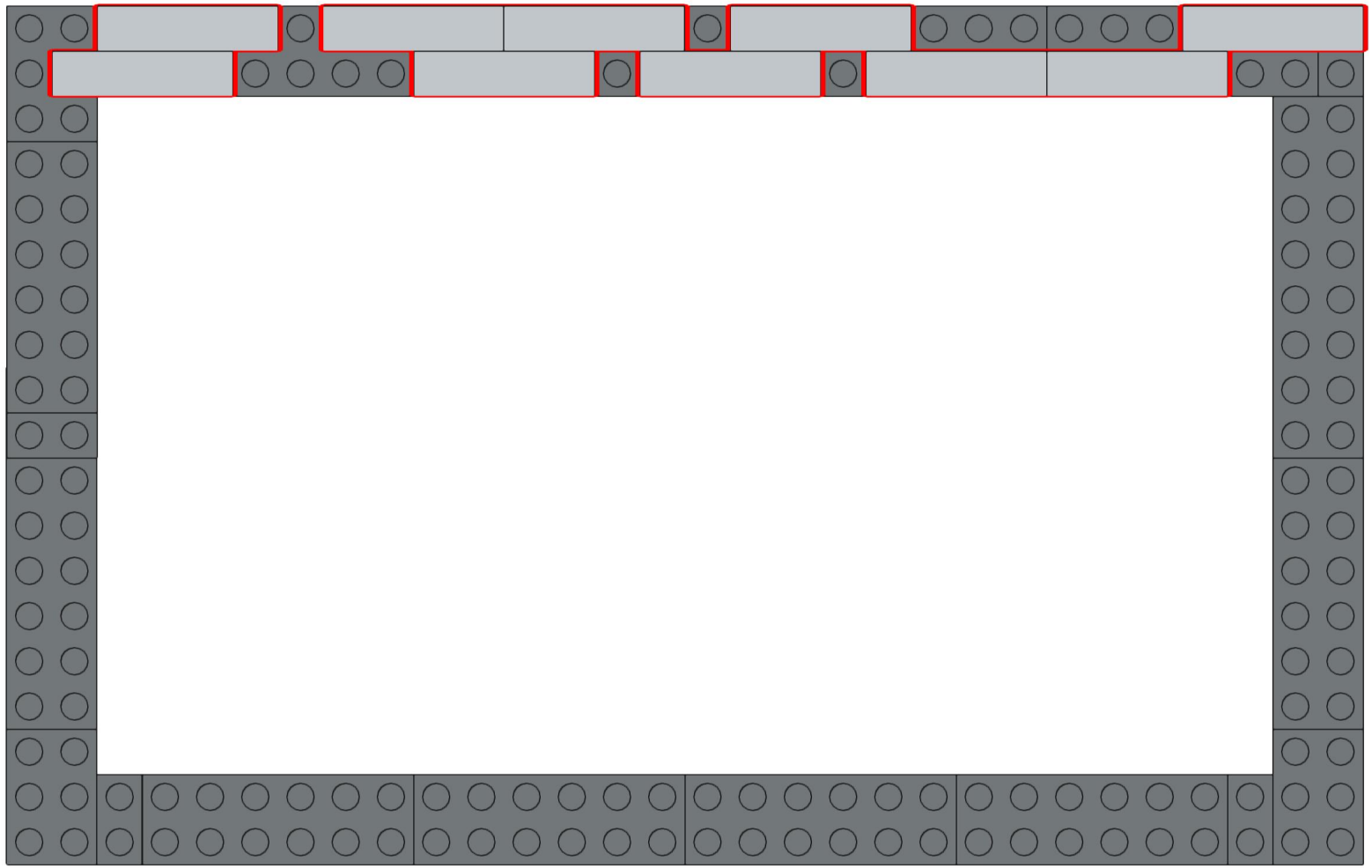

52

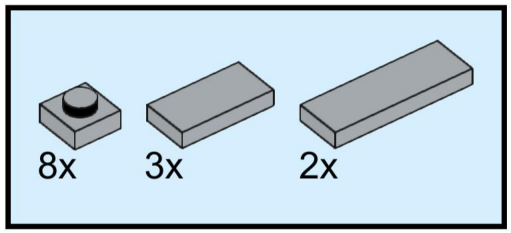

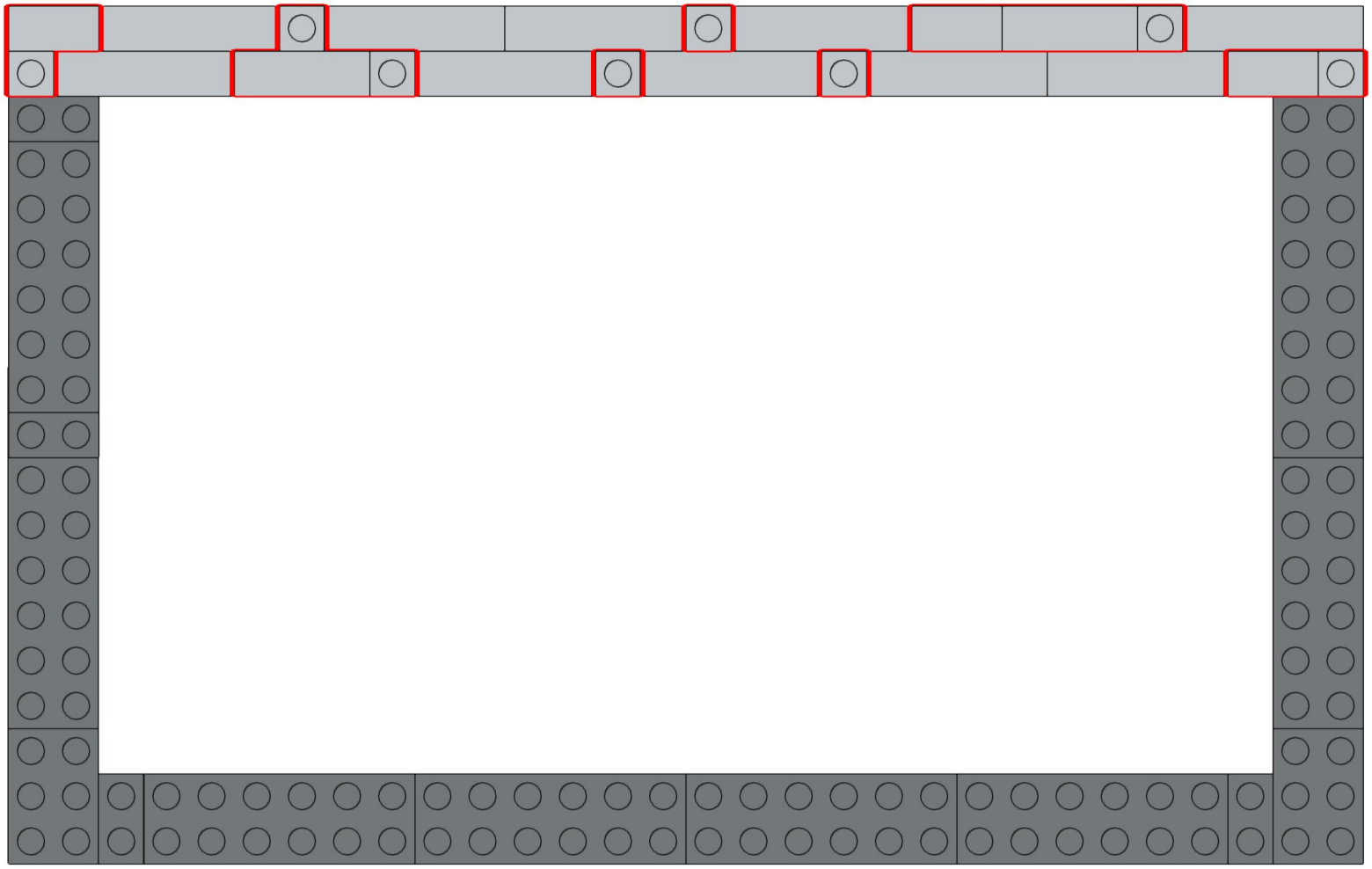

53

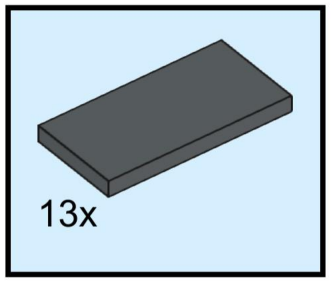

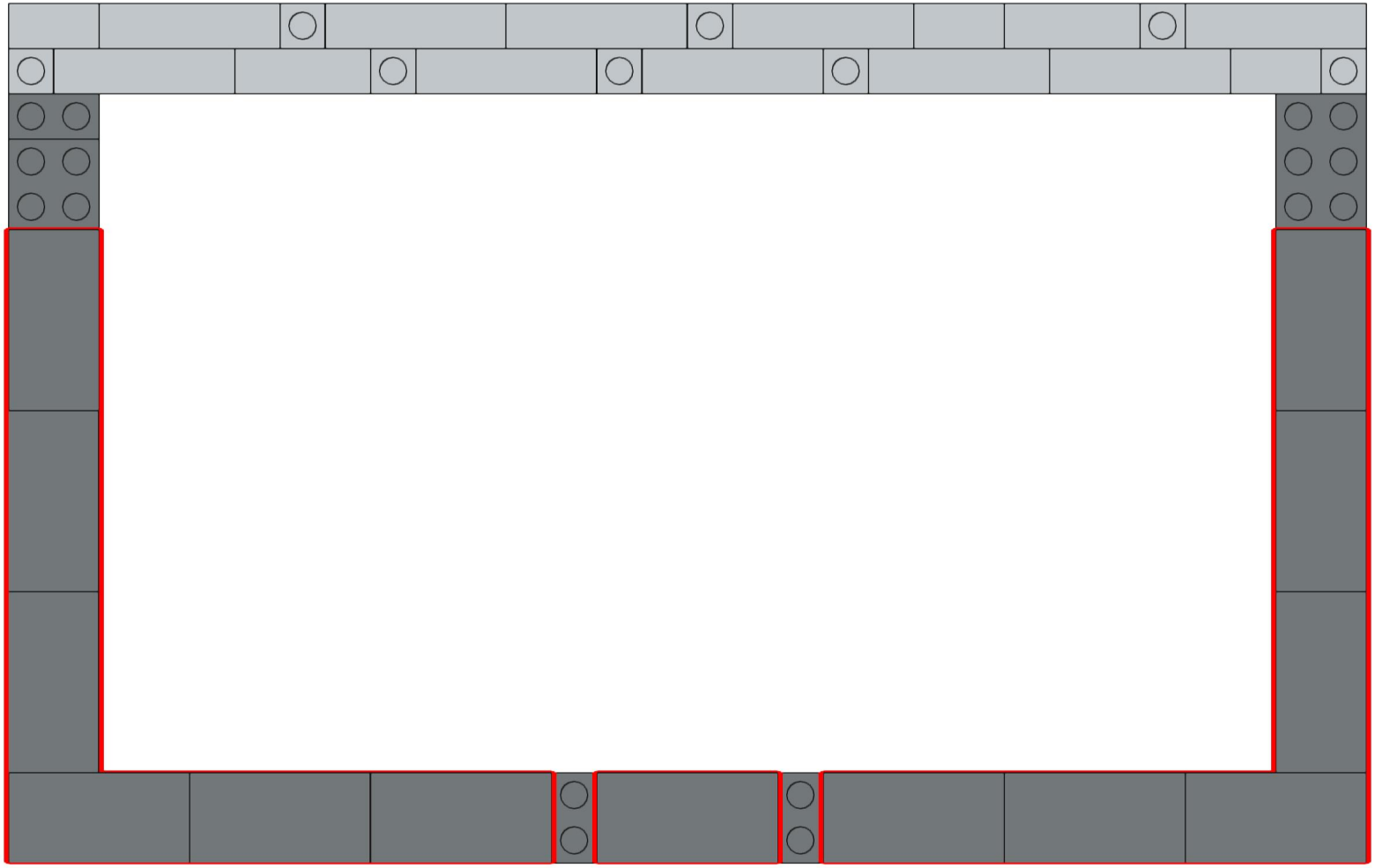

54

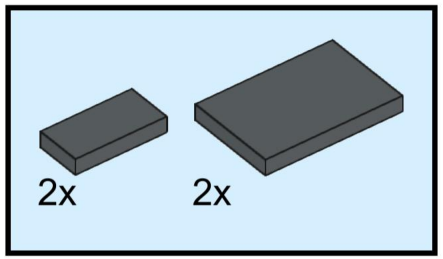

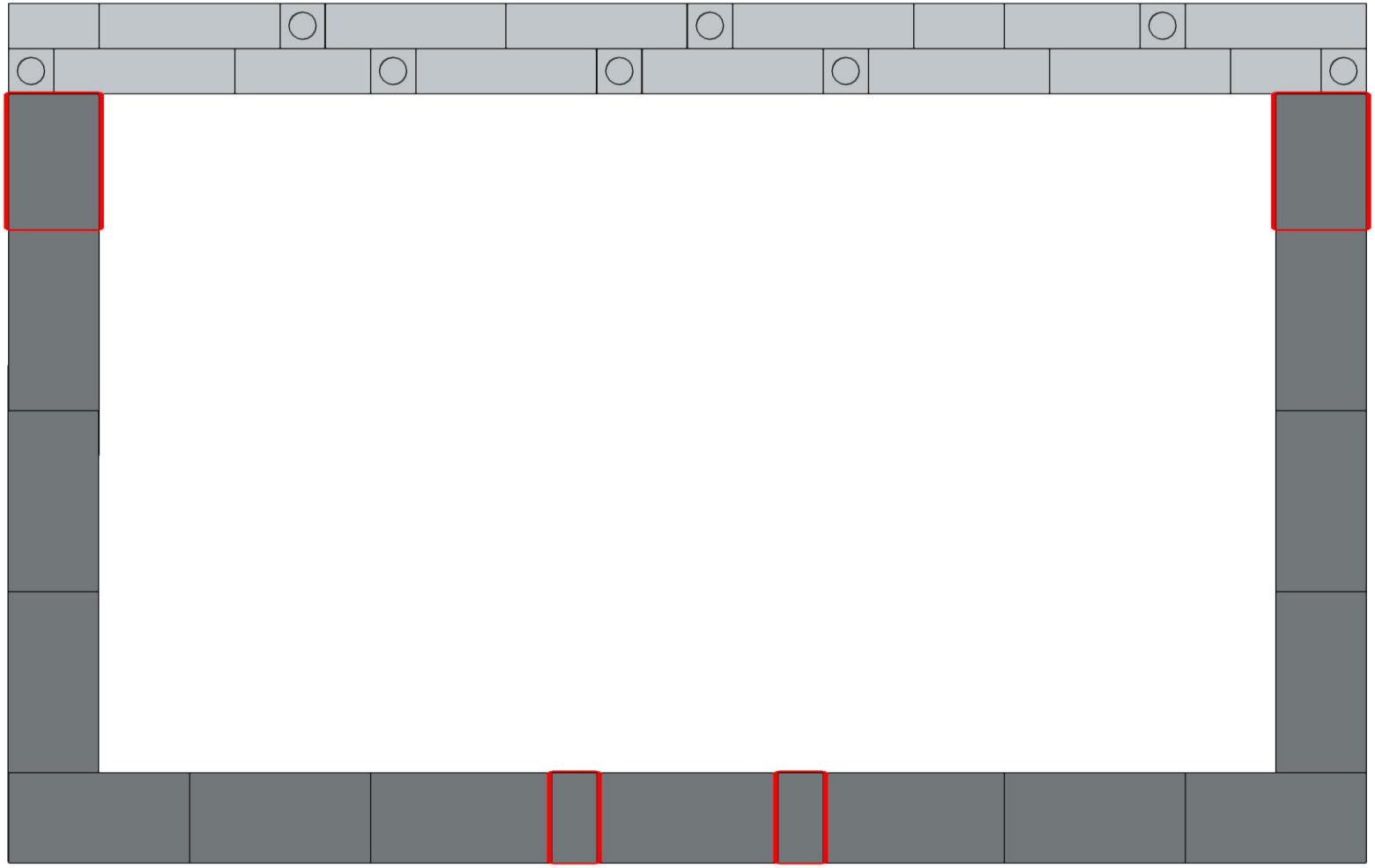

55

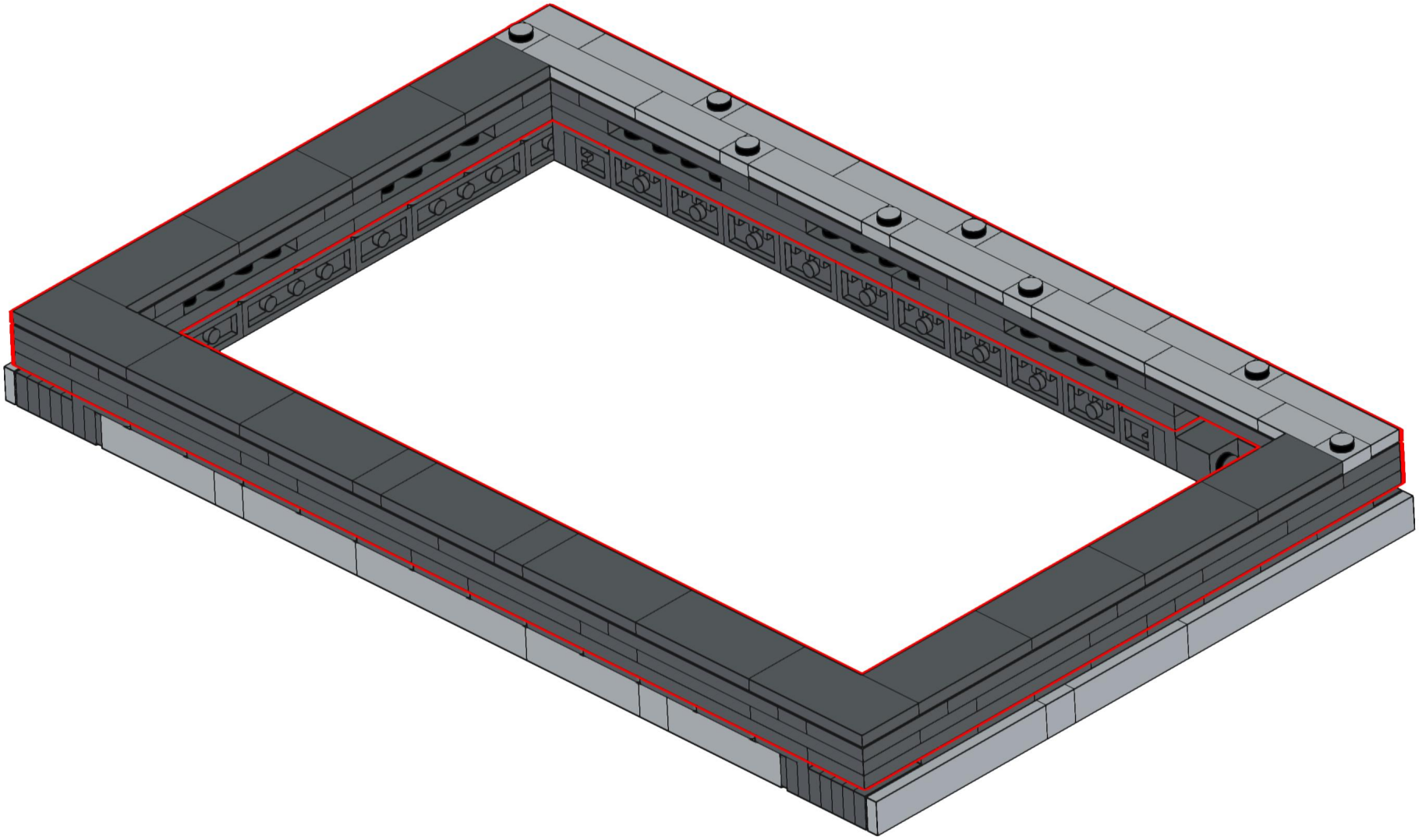

56

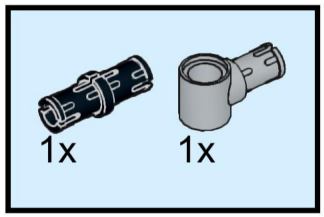

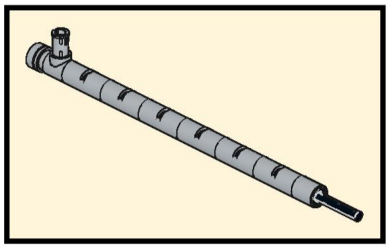

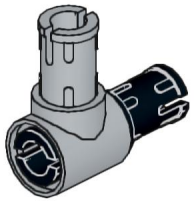

57

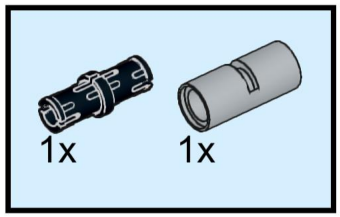

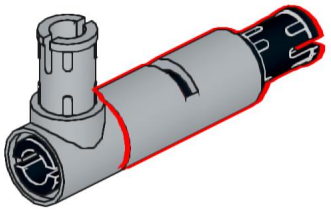

58

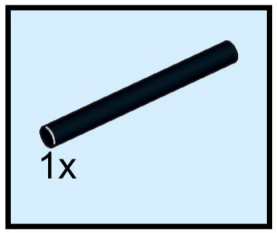

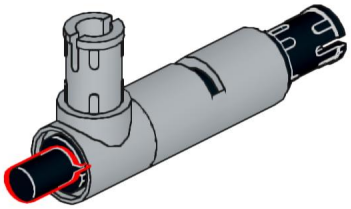

59

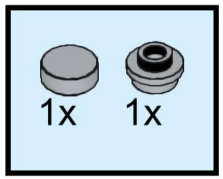

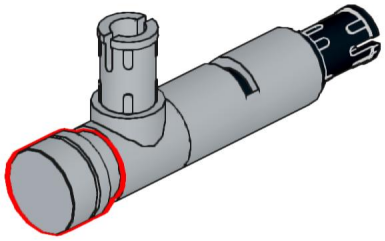

60

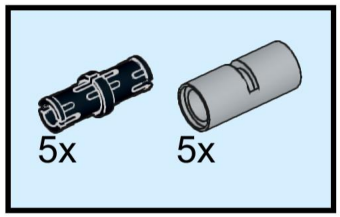

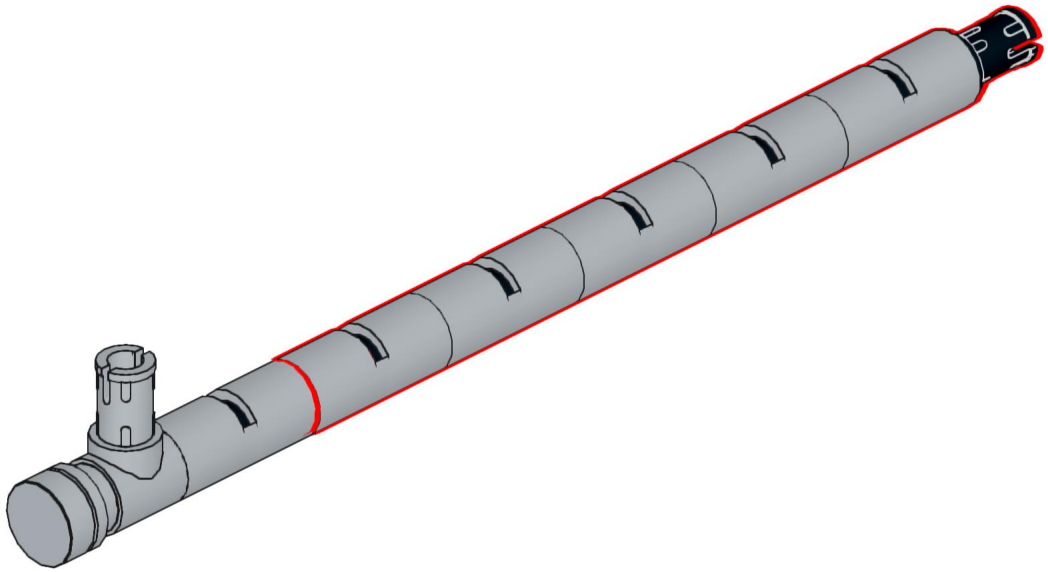

61

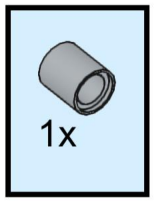

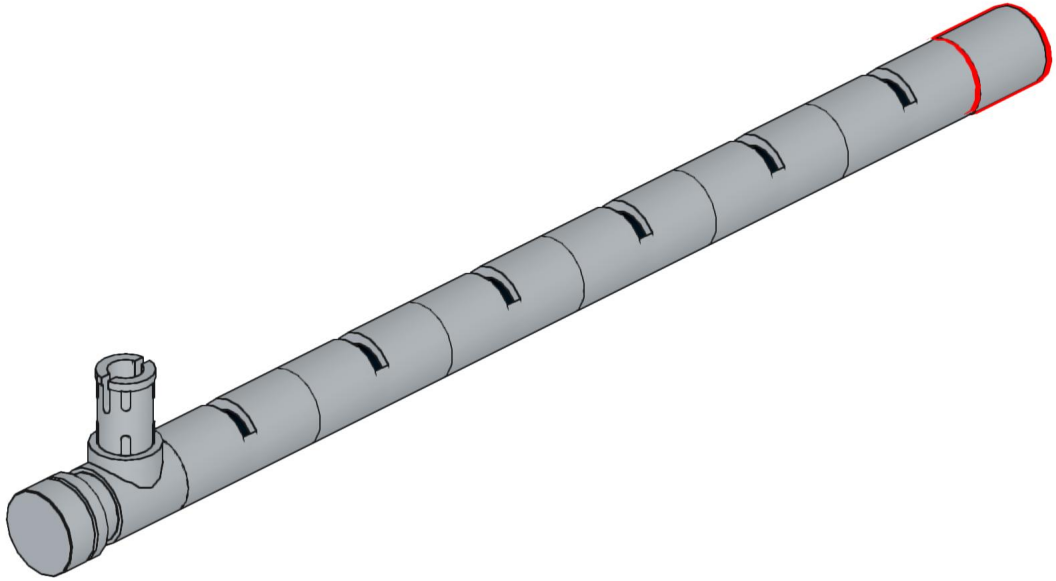

62

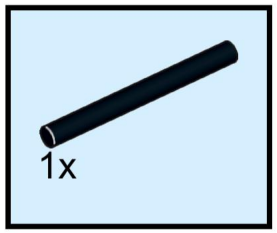

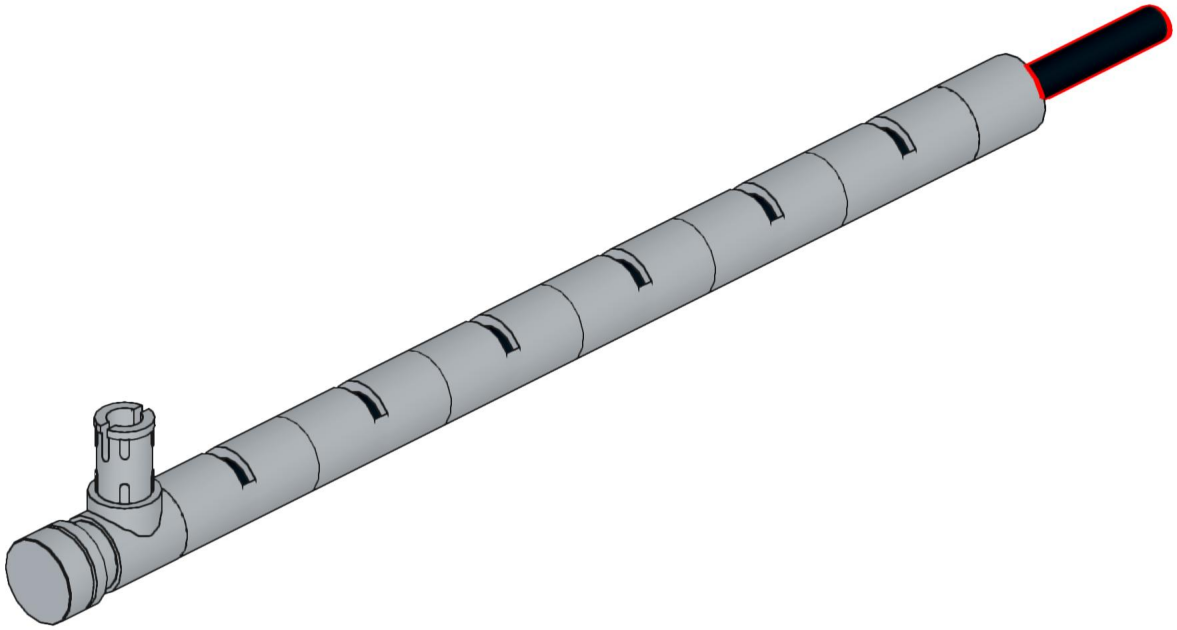

63

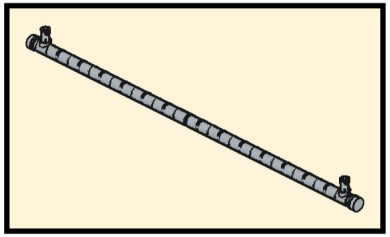

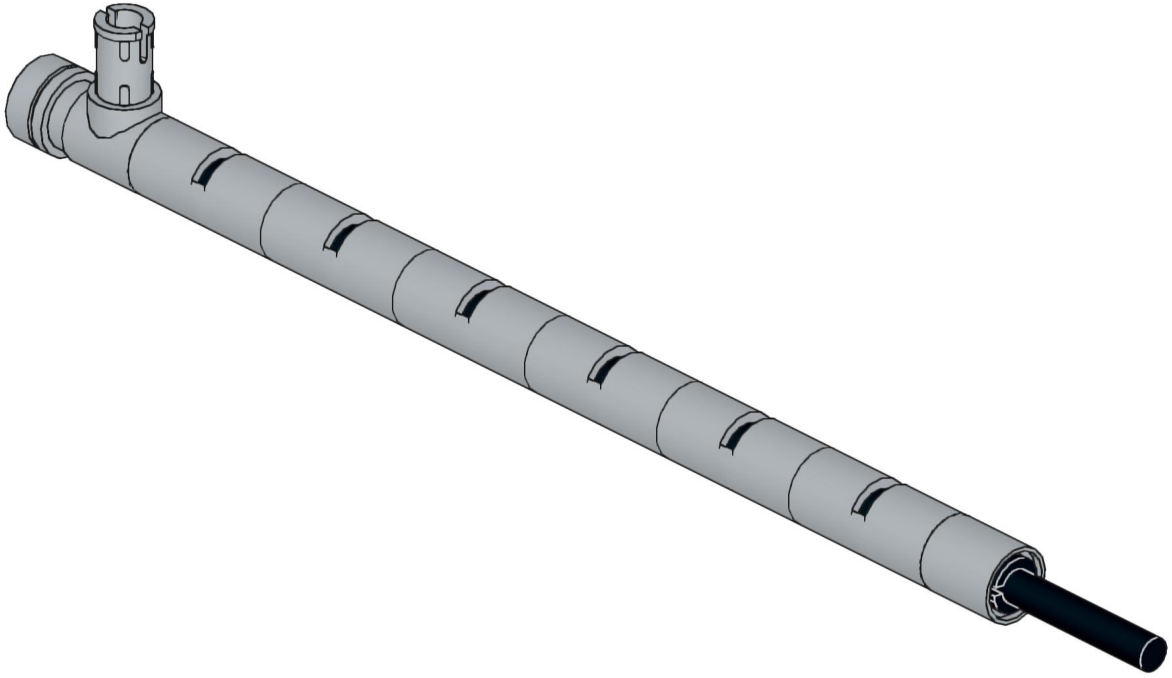

64

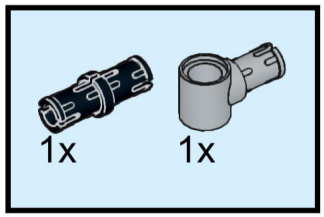

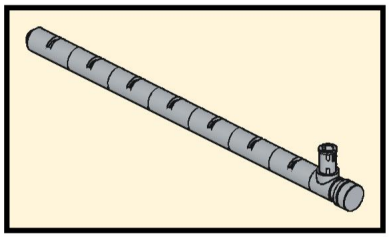

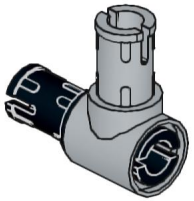

65

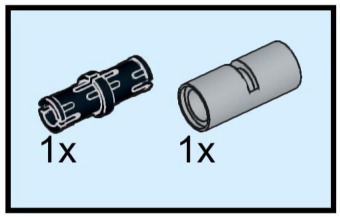

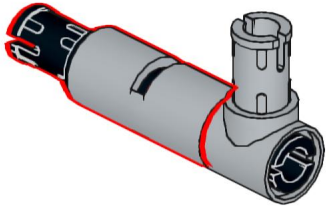

66

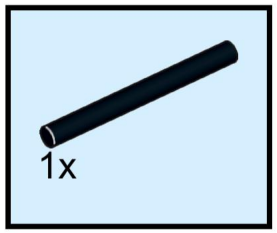

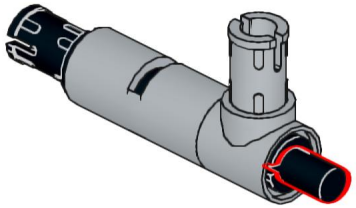

67

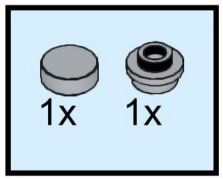

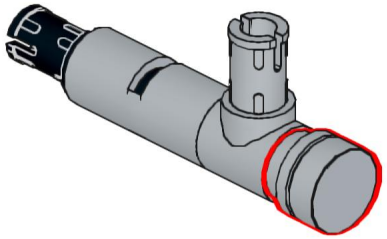

68

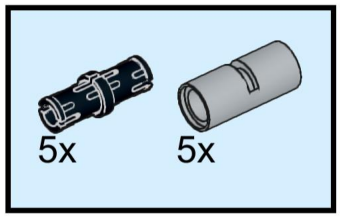

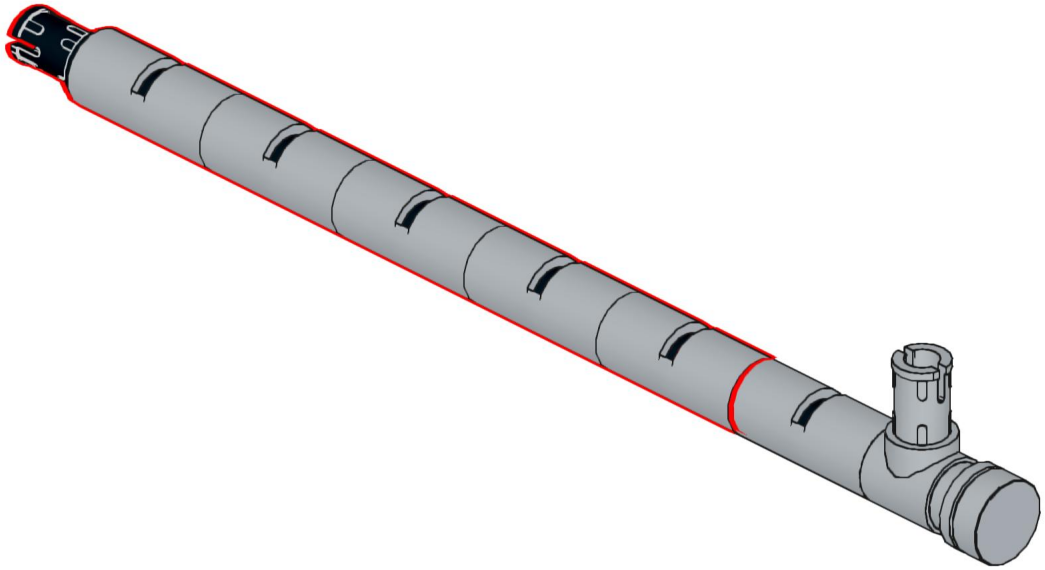

69

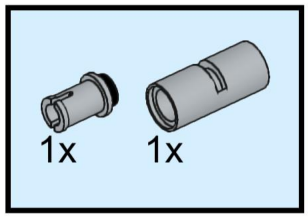

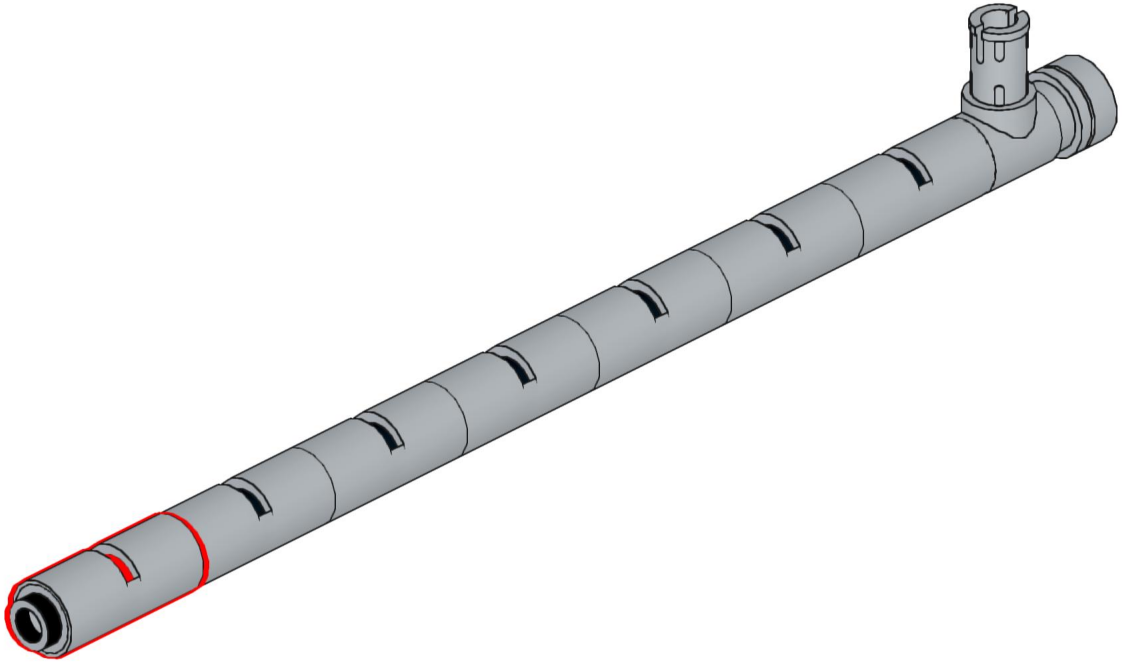

70

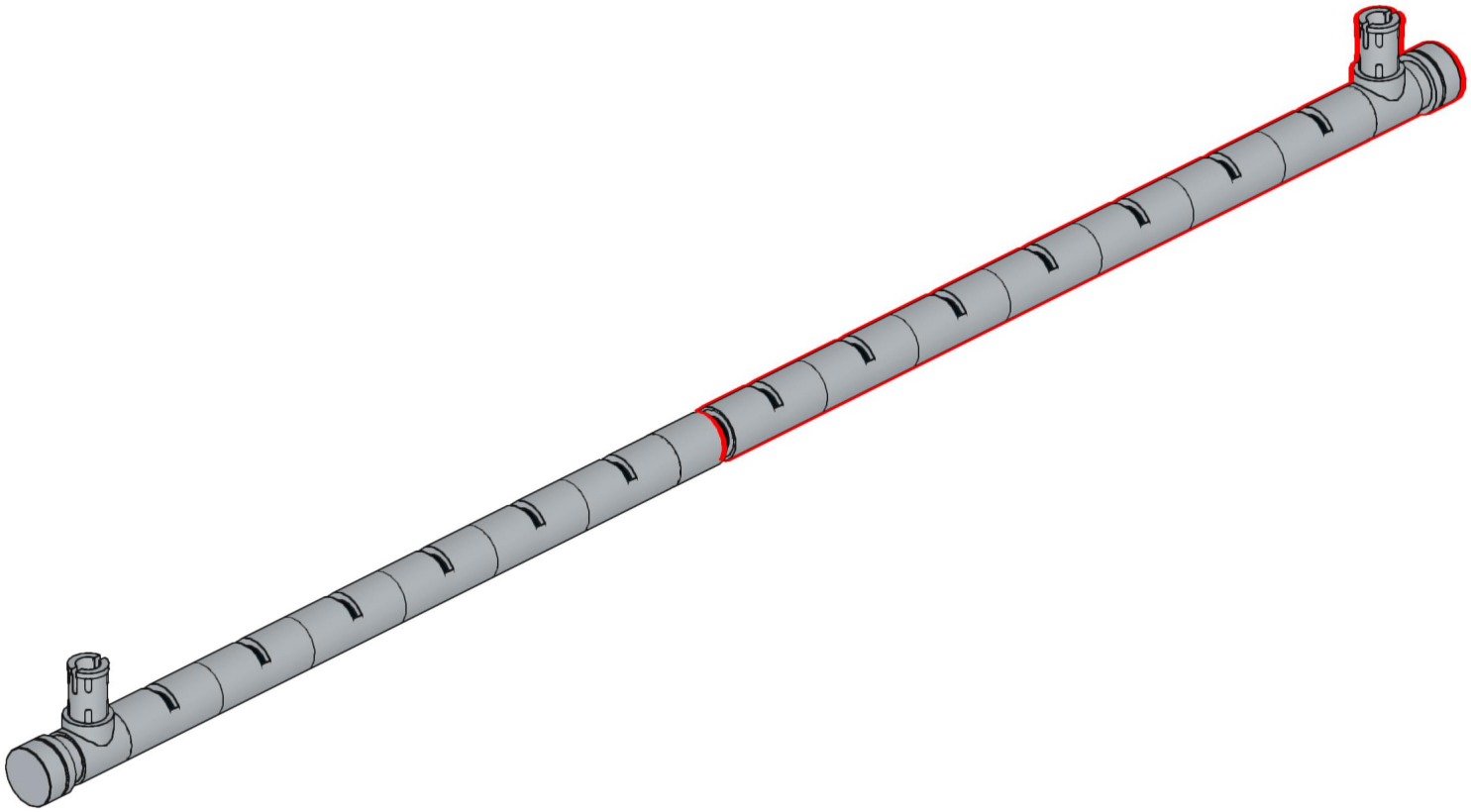

71

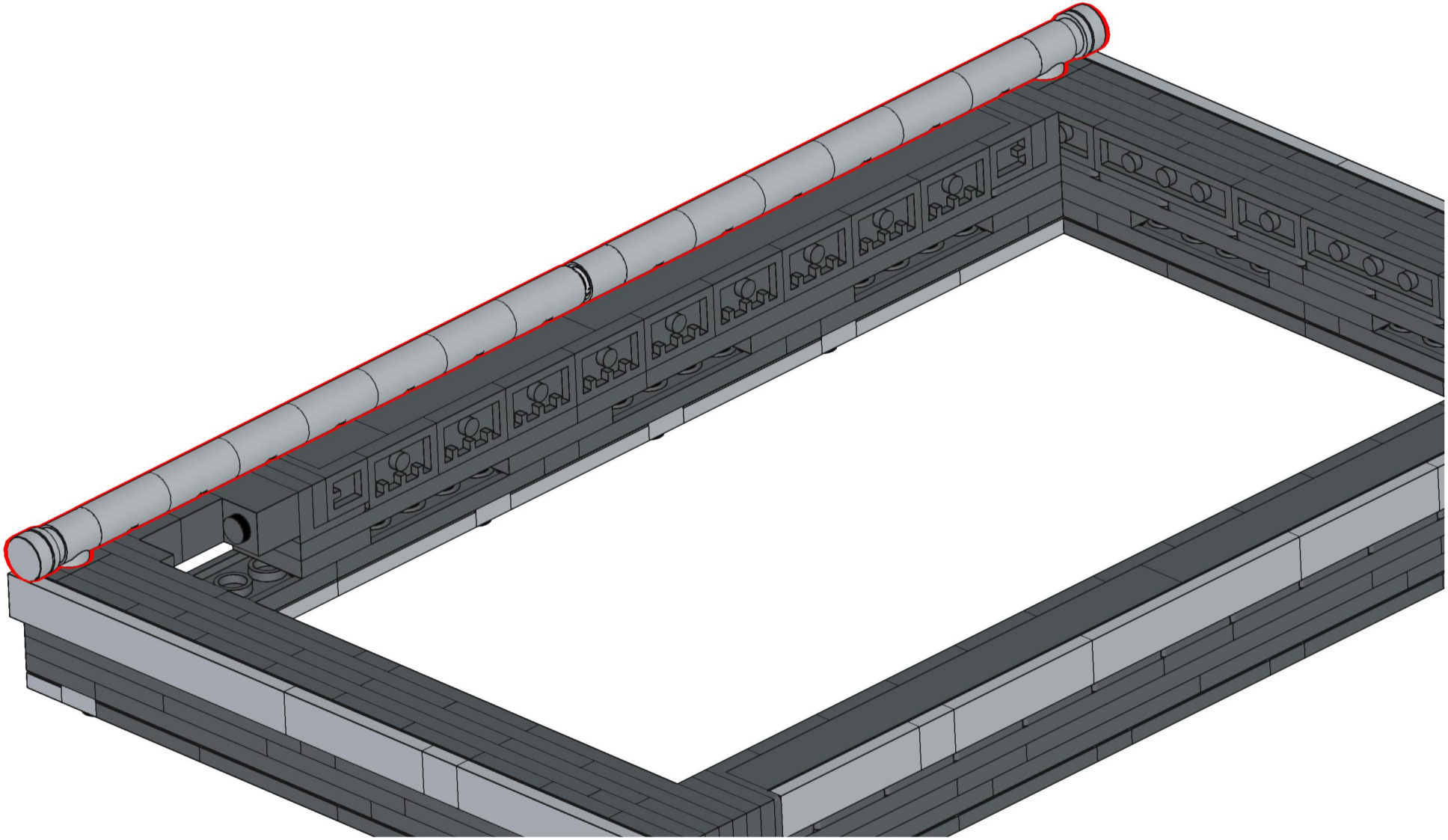

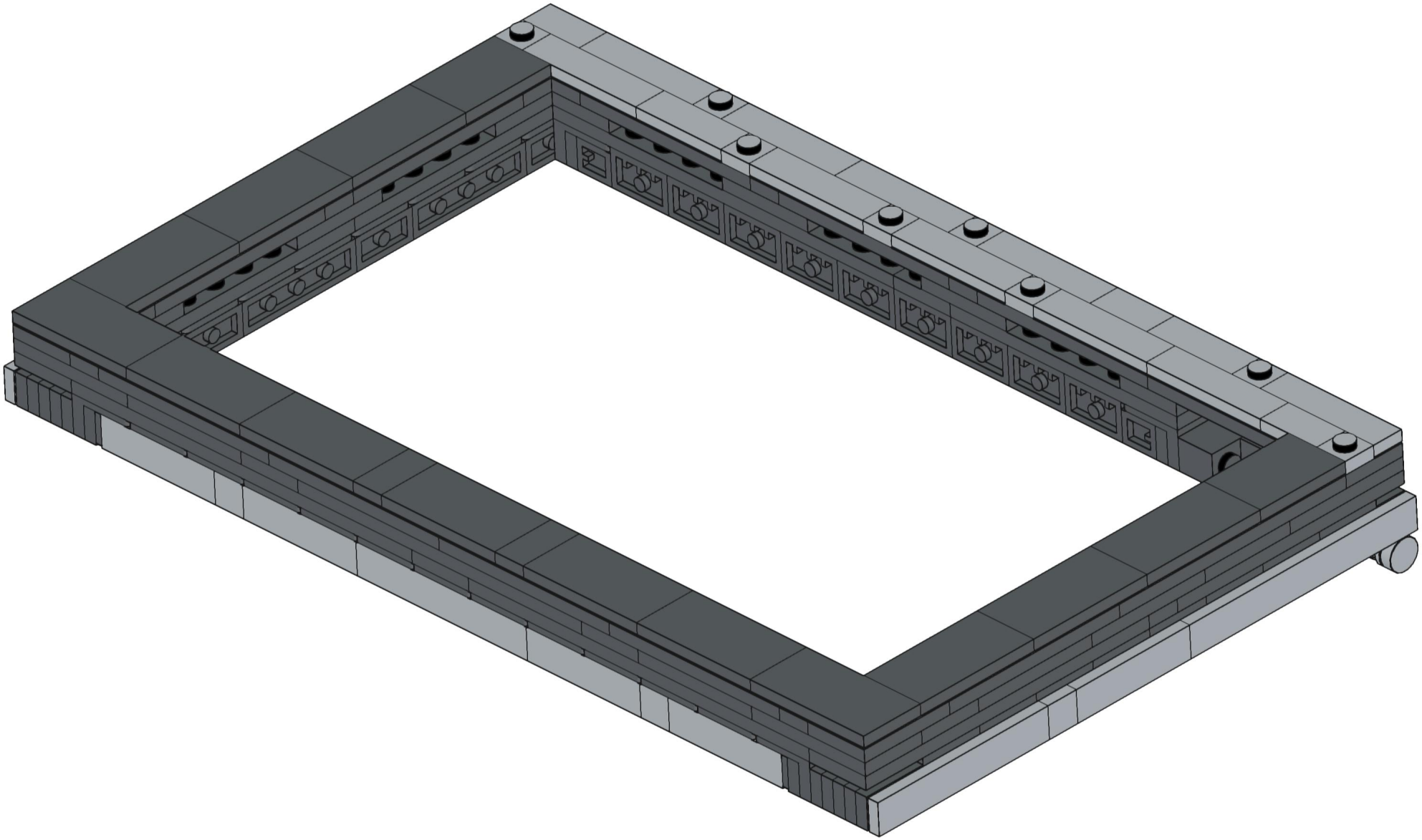

14x
2780
Black

3x
30374
Black

4x
3024
Dark Bluish Gray

2x
3005
Dark Bluish Gray

2x
6541
Dark Bluish Gray

2x
3069b
Dark Bluish Gray

22x
3023
Dark Bluish Gray

4x
73825
Dark Bluish Gray

2x
3004
Dark Bluish Gray

8x
3022
Dark Bluish Gray

20x
99207
Dark Bluish Gray

6x
3623
Dark Bluish Gray

20x
44728
Dark Bluish Gray

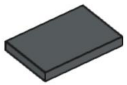
2x
26603
Dark Bluish Gray

6x
3021
Dark Bluish Gray

22x
3710
Dark Bluish Gray

2x
2431
Dark Bluish Gray

5x
3020
Dark Bluish Gray

13x
87079
Dark Bluish Gray

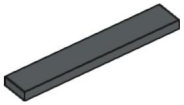
2x
6636
Dark Bluish Gray

7x
3666
Dark Bluish Gray

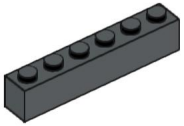
1x
3009
Dark Bluish Gray

11x
3795
Dark Bluish Gray

4x
3034
Dark Bluish Gray

1x
4477
Dark Bluish Gray

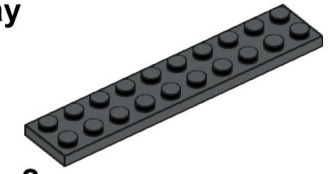
2x
3832
Dark Bluish Gray

2x
60479
Dark Bluish Gray

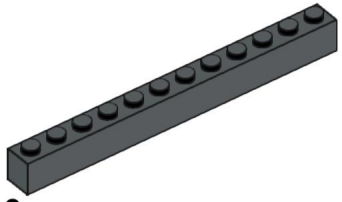
3x
6112
Dark Bluish Gray

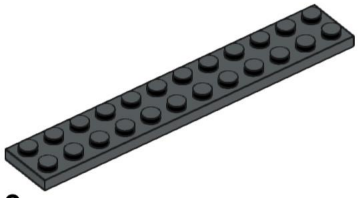
3x
2445
Dark Bluish Gray

2x
98138
Light Bluish Gray

4x
3070b
Light Bluish Gray

8x
3024
Light Bluish Gray

2x
85861
Light Bluish Gray

1x
18654
Light Bluish Gray

1x
4274
Light Bluish Gray

3x
3069b
Light Bluish Gray

2x
15100
Light Bluish Gray

13x
62462
Light Bluish Gray

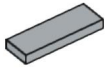
2x
63864
Light Bluish Gray

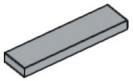
16x
2431
Light Bluish Gray

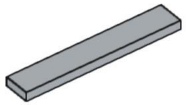
3x
6636
Light Bluish Gray

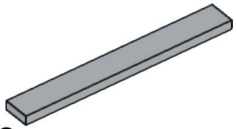
2x
4162
Light Bluish Gray