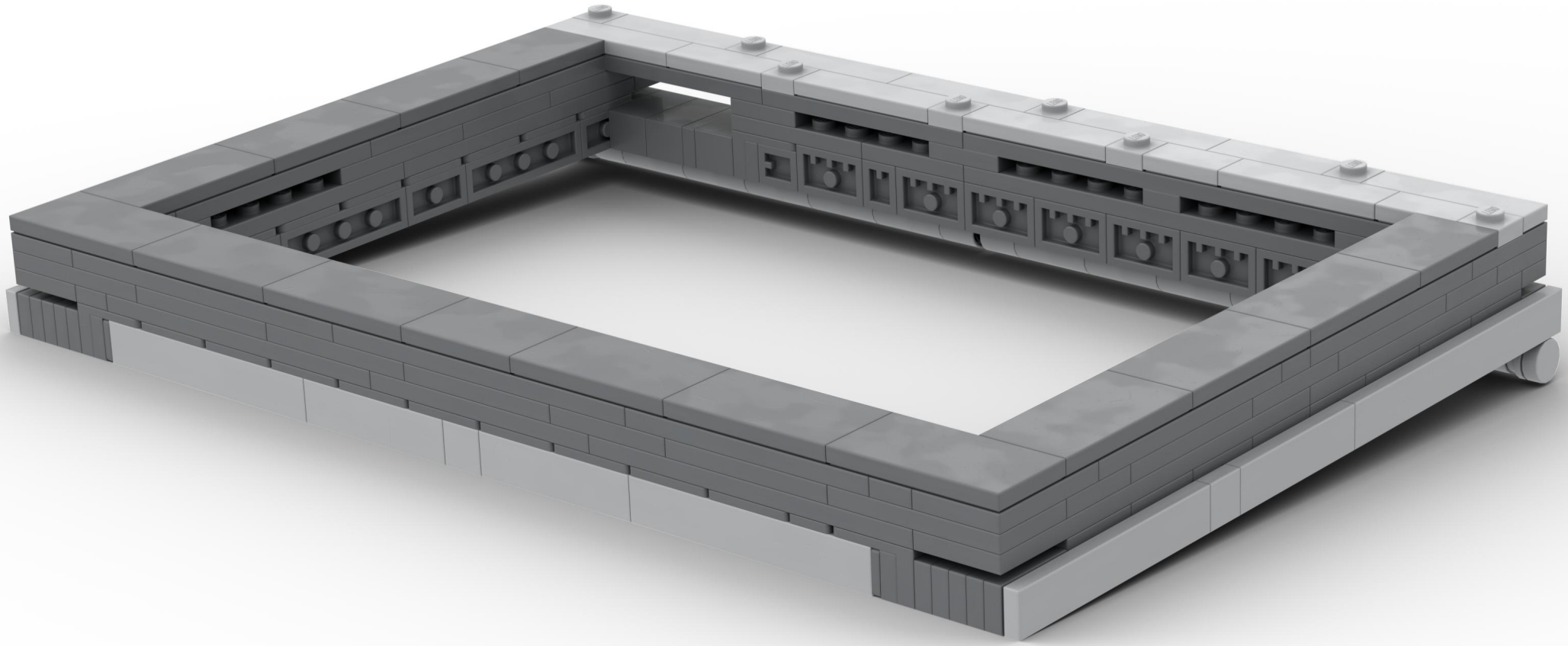

# Cheeseboard v1 Left-Side

By: Carson Mann

# 1

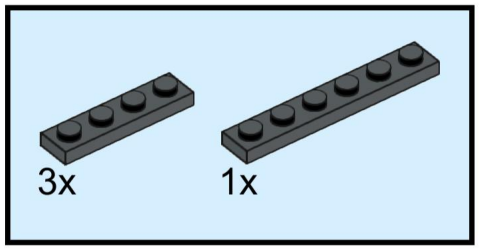


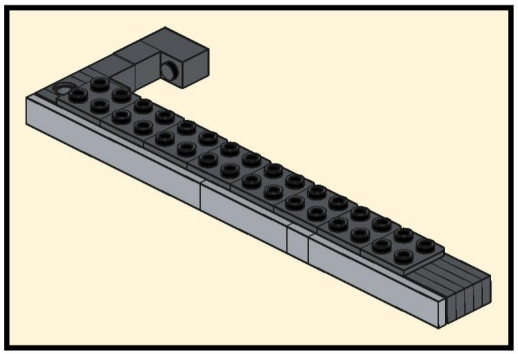

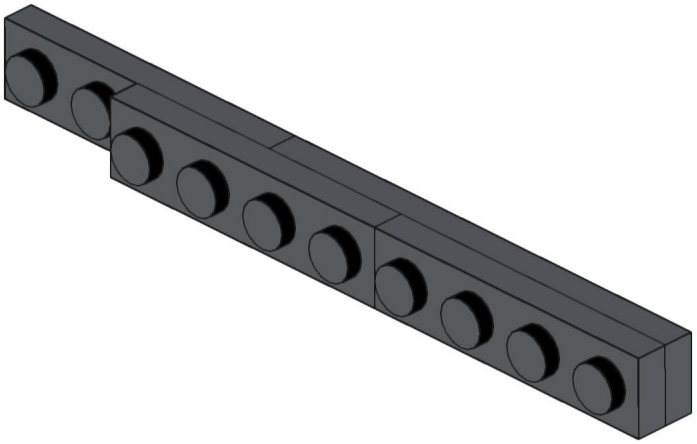

# 2

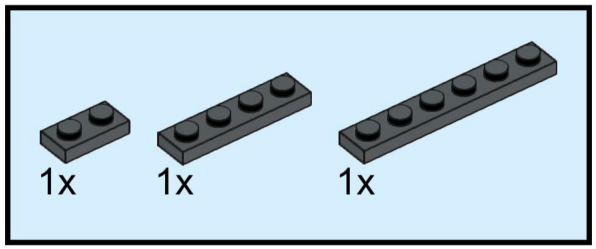


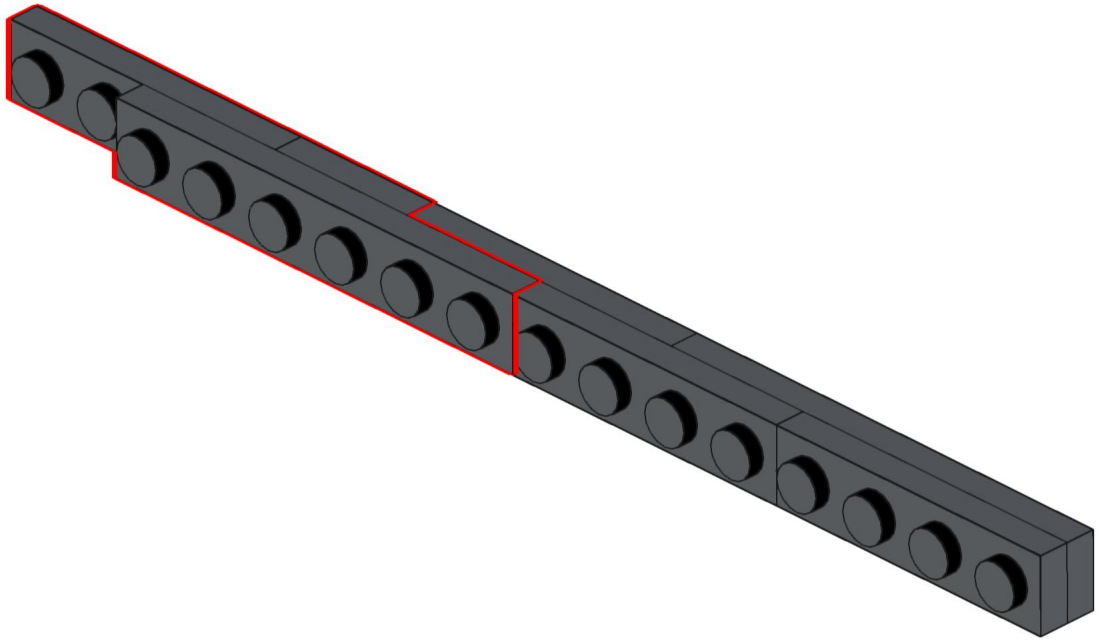

# 3

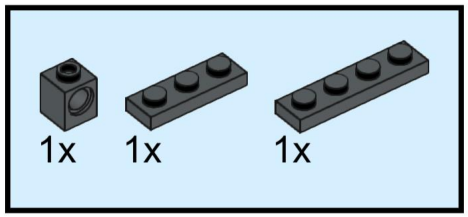


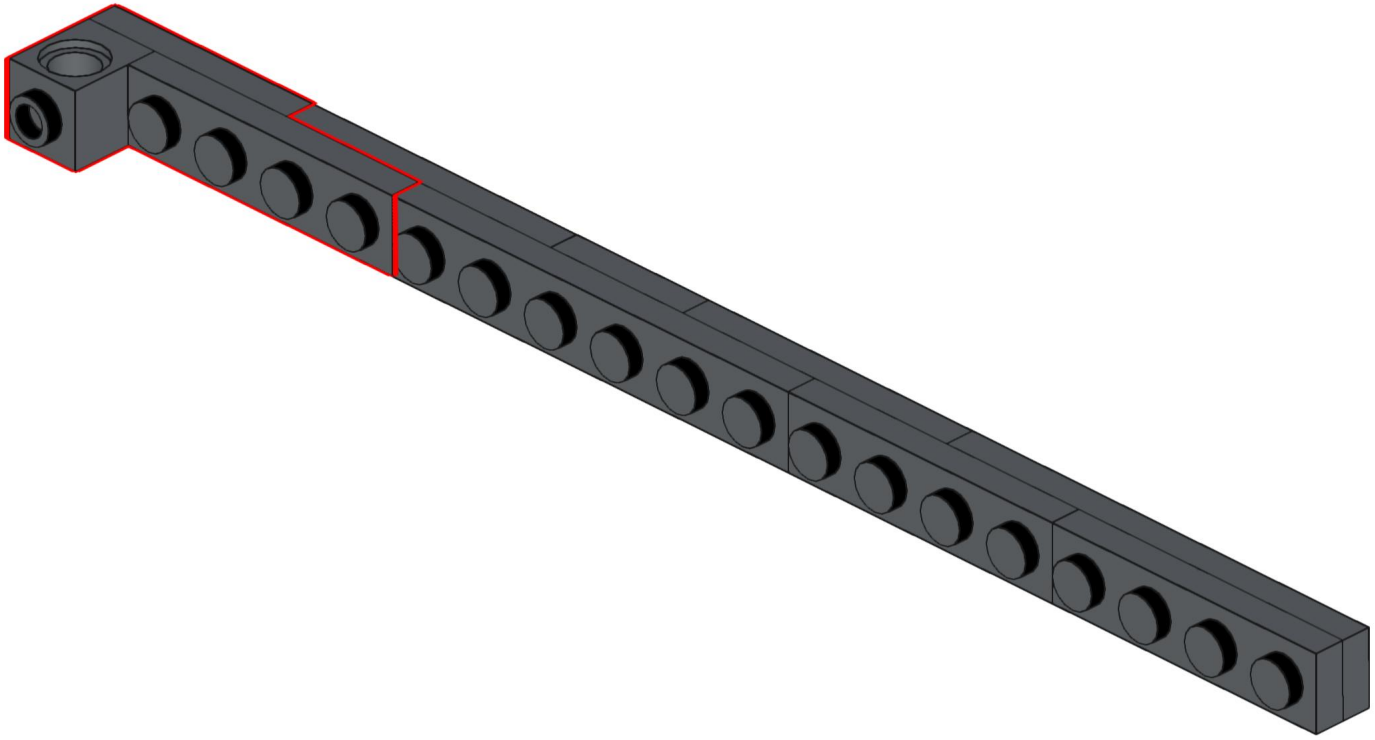

# 4

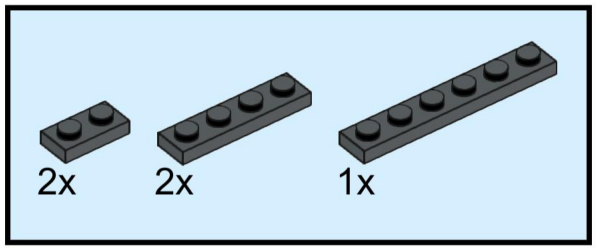


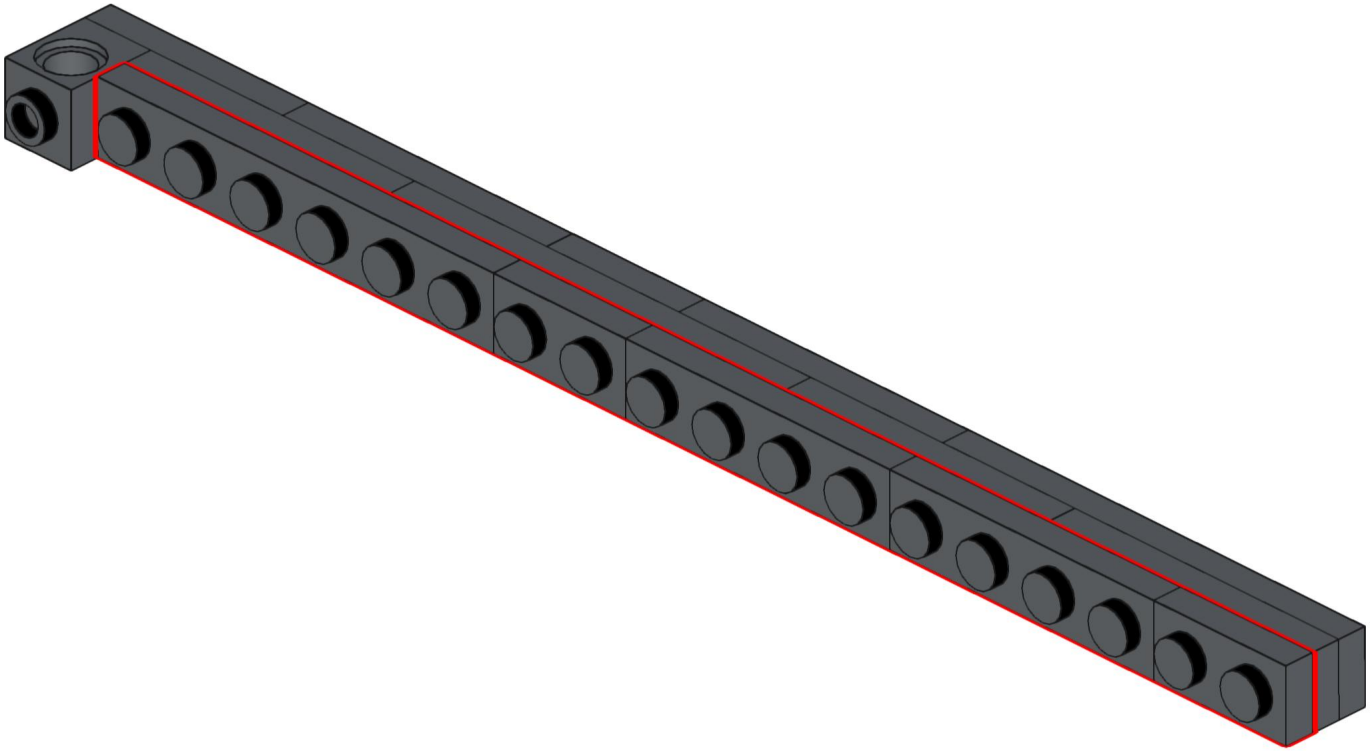

# 5

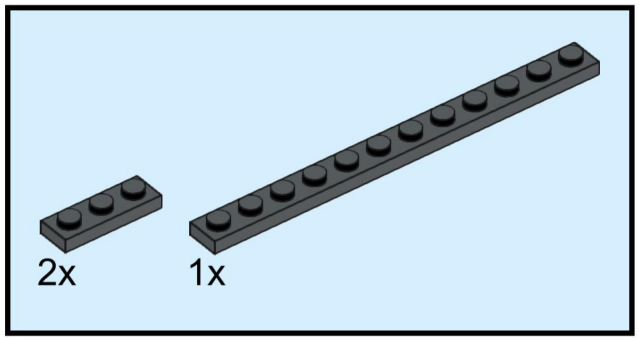


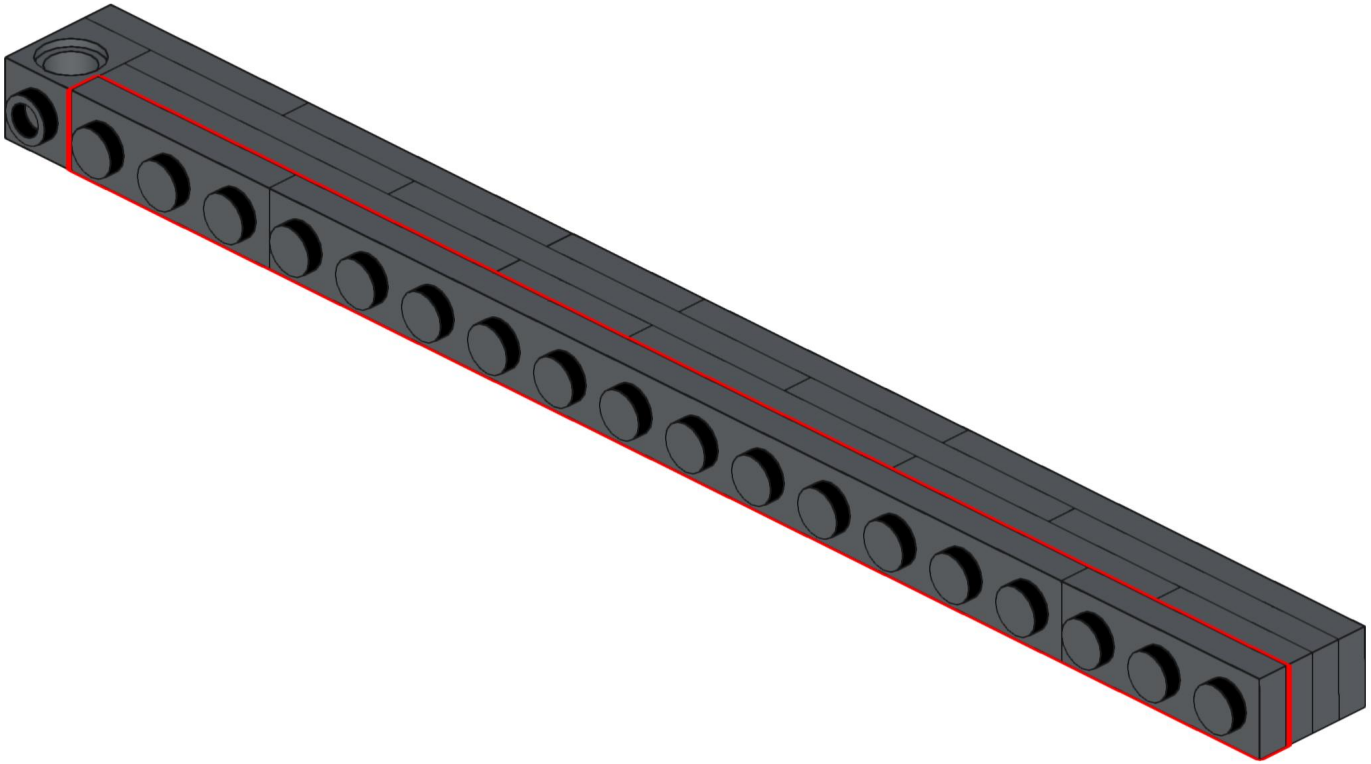

# 6

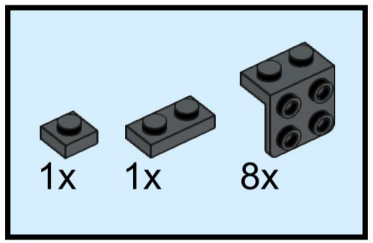


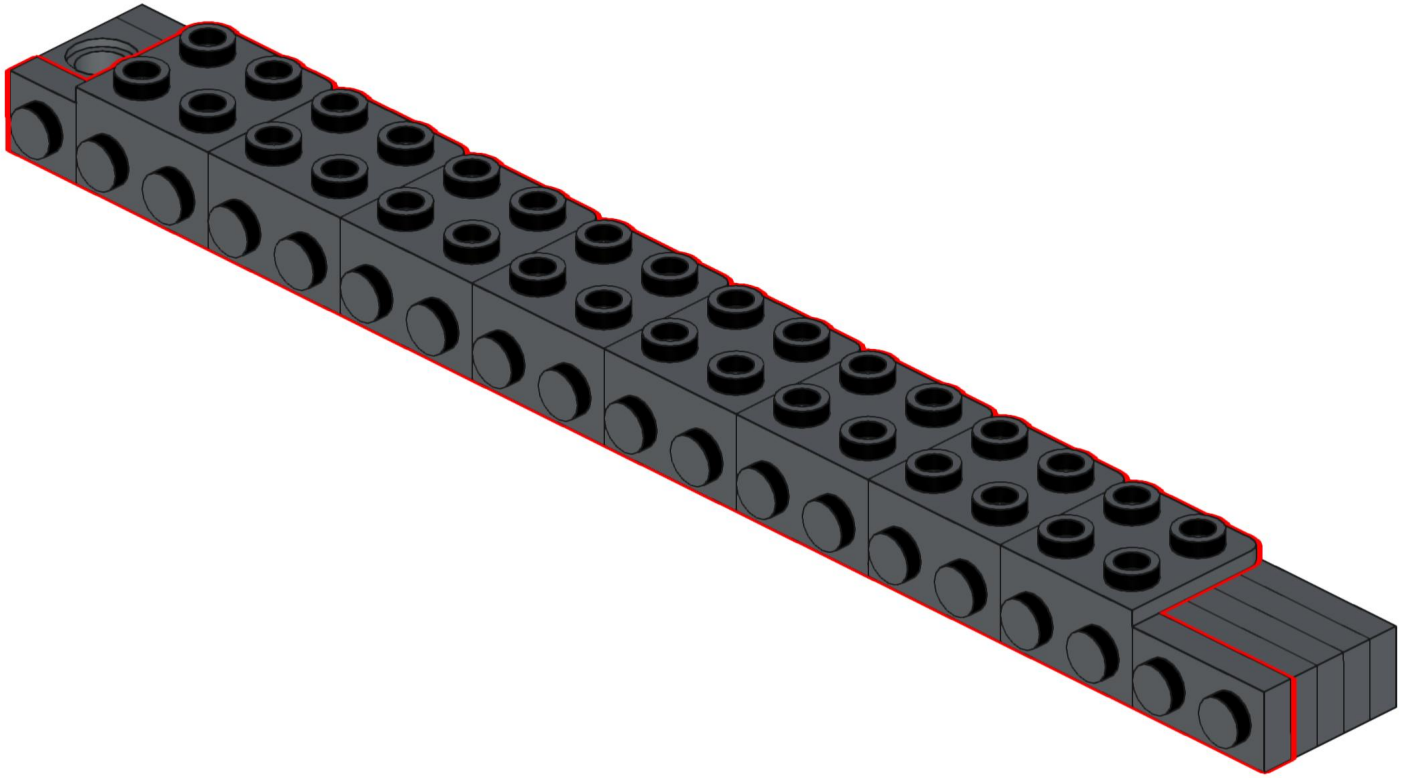

# 7

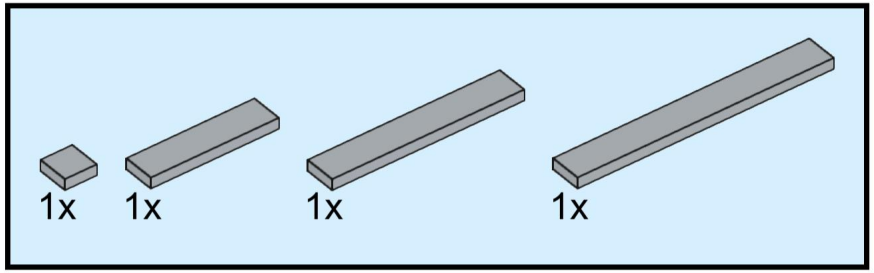


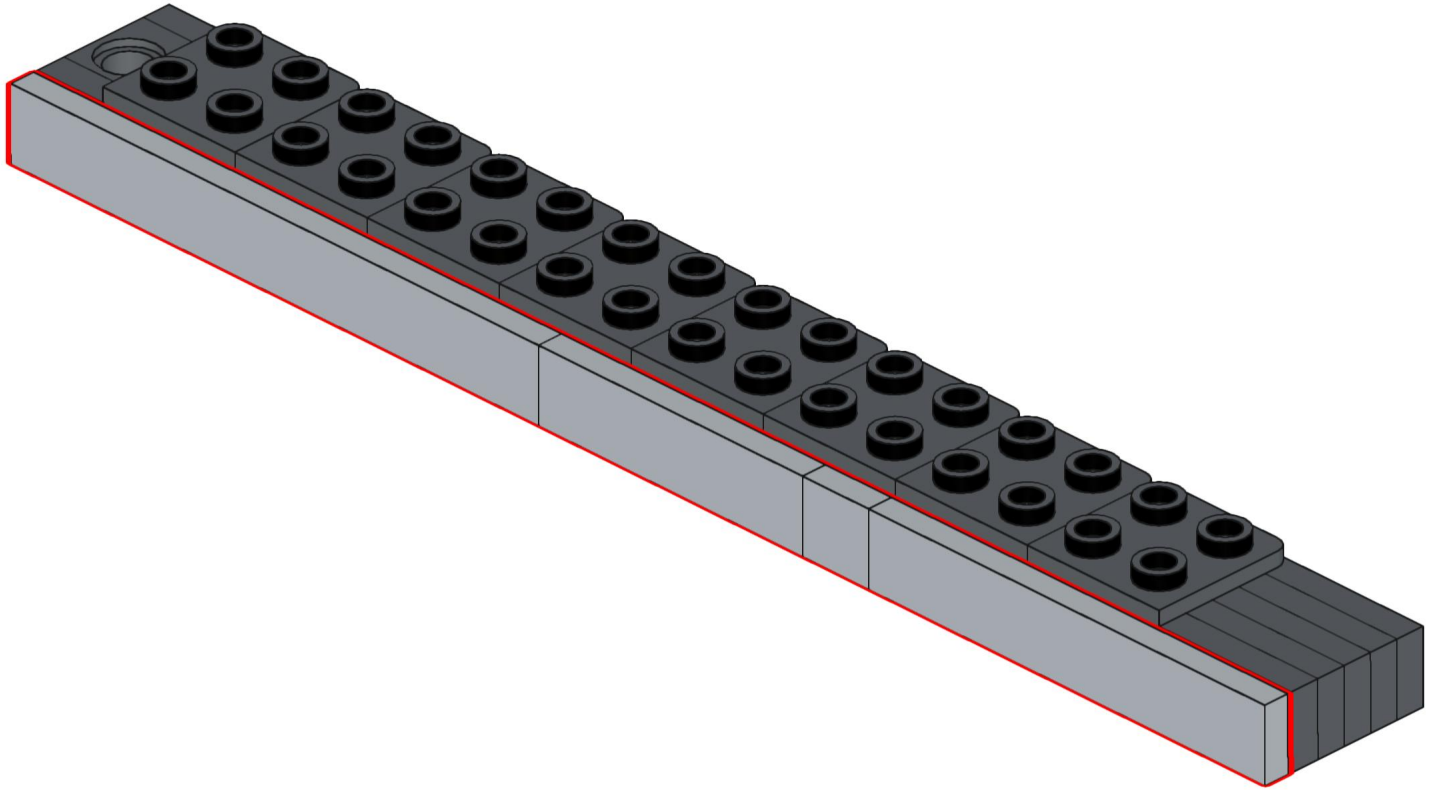

# 8

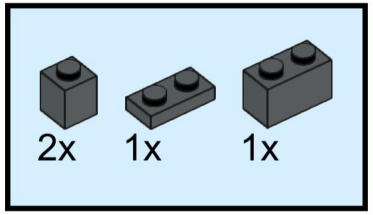


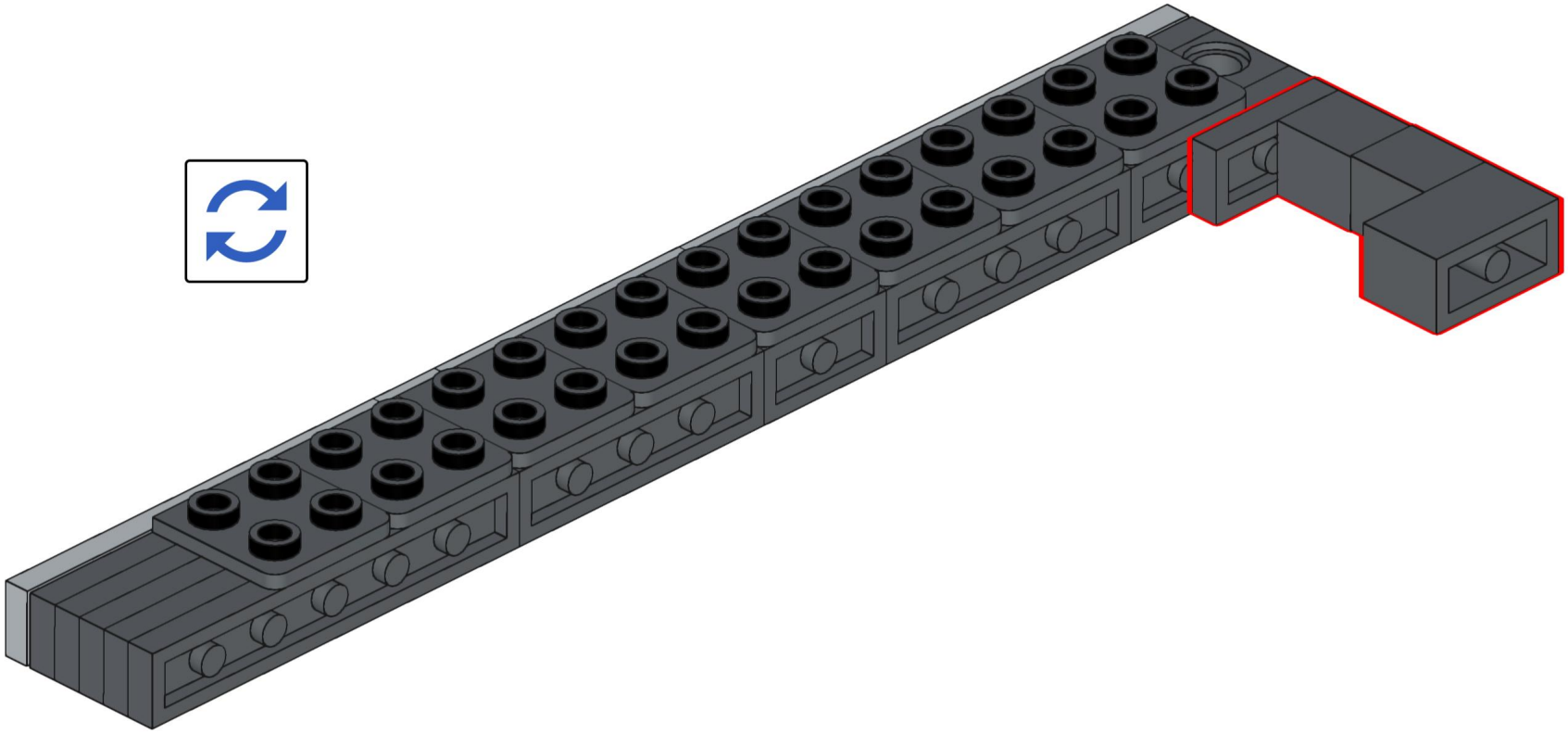

# 9

# 10

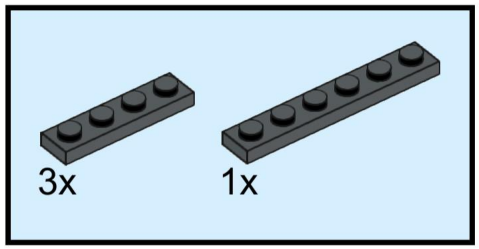


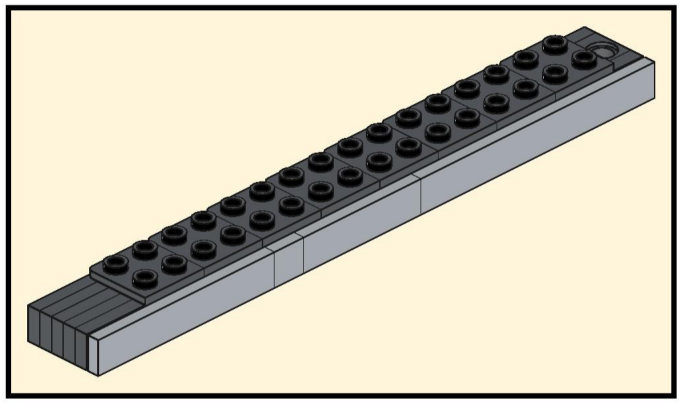

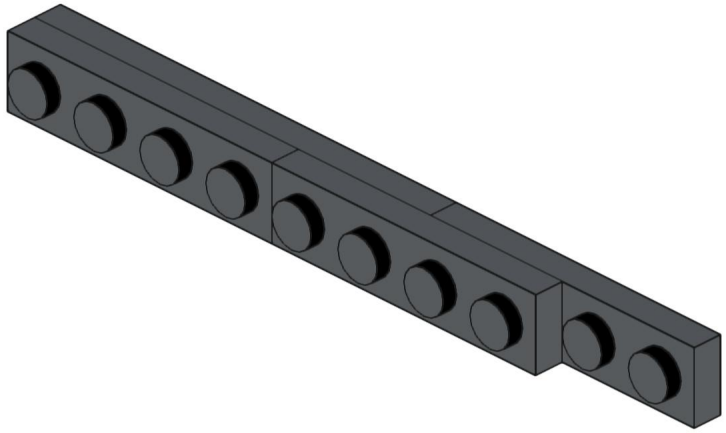

# 11

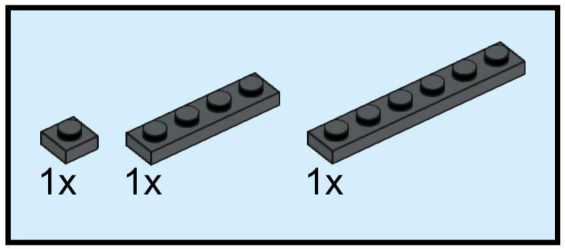


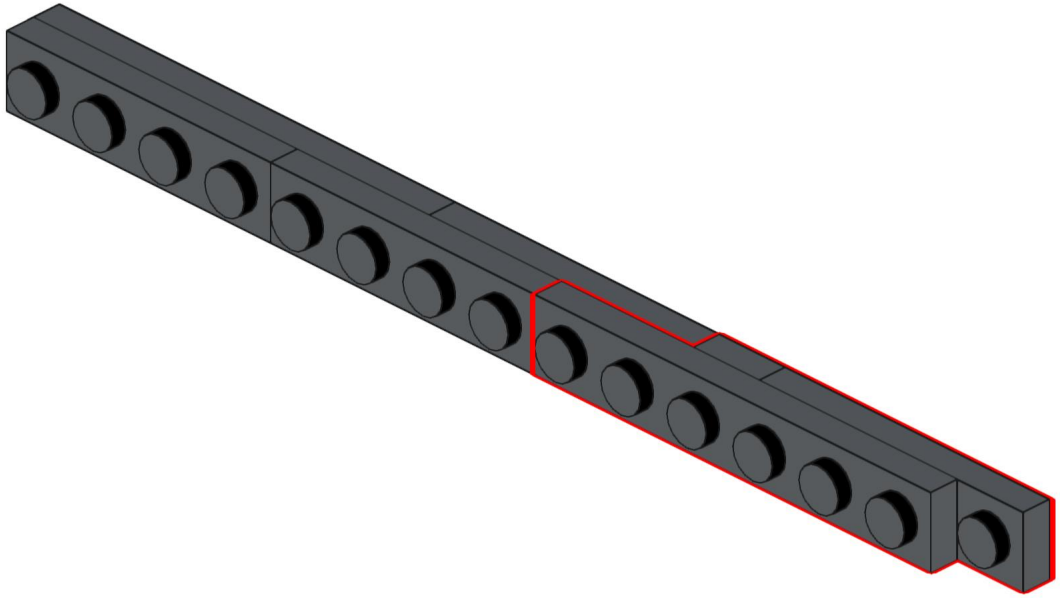

# 12

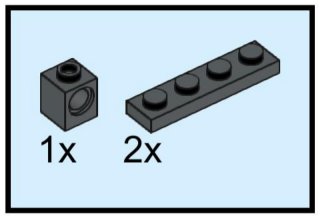


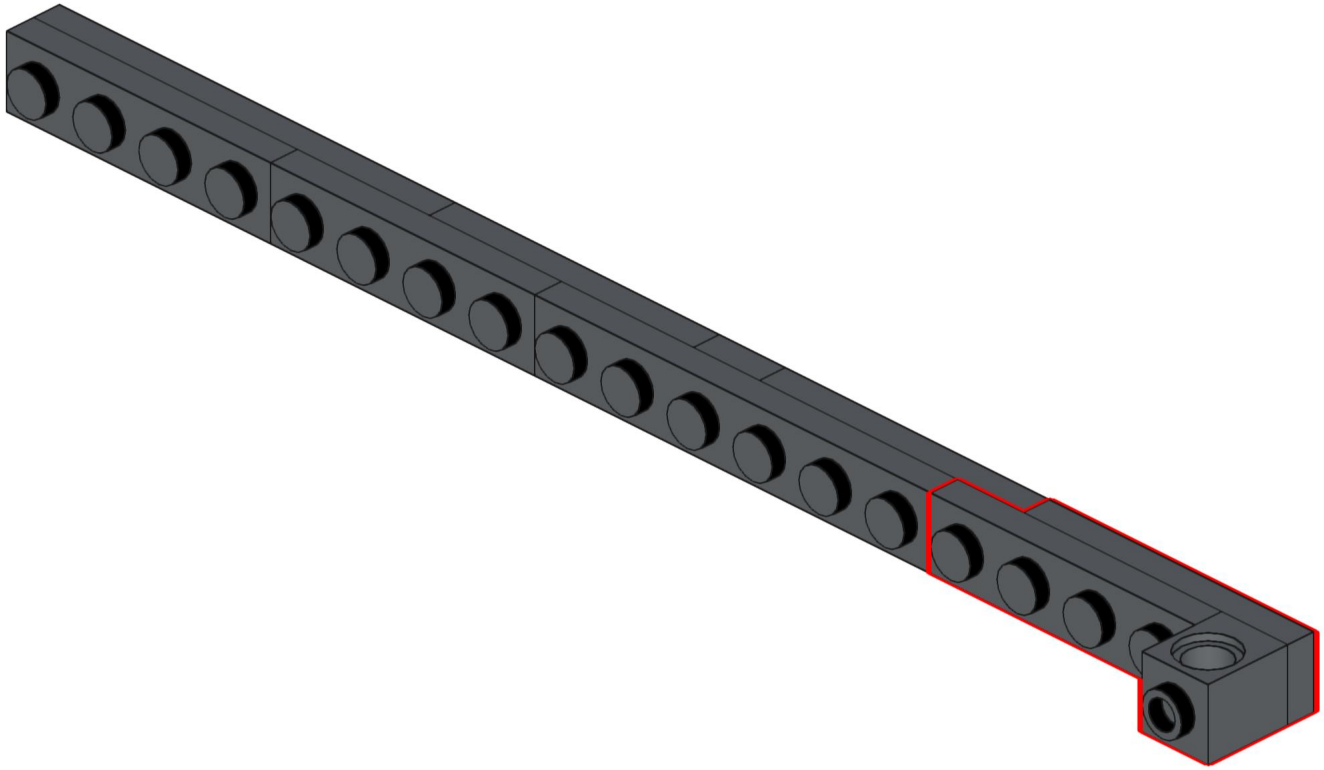

# 13

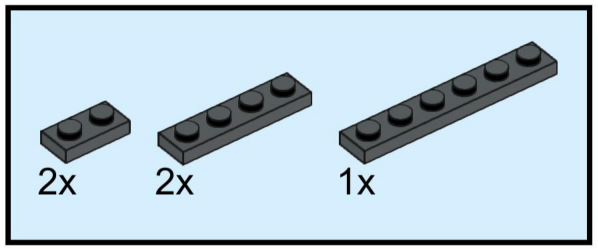


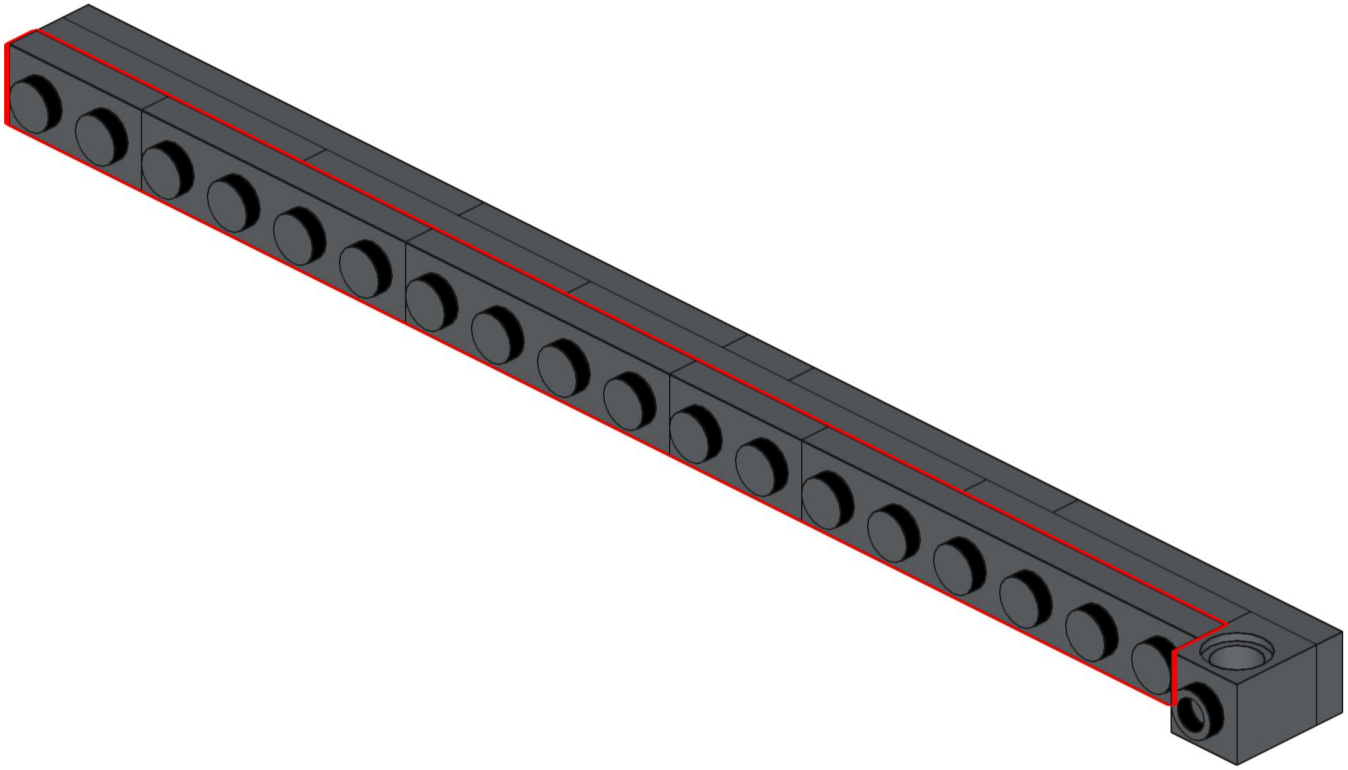

# 14

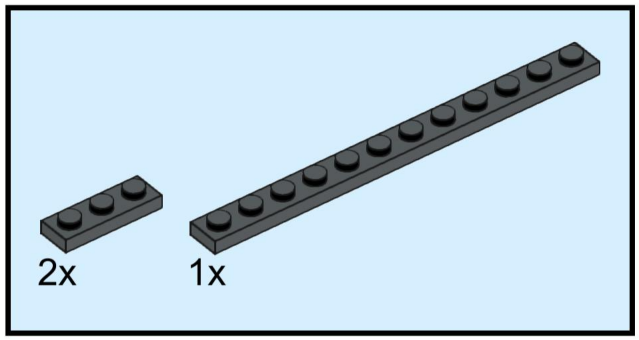


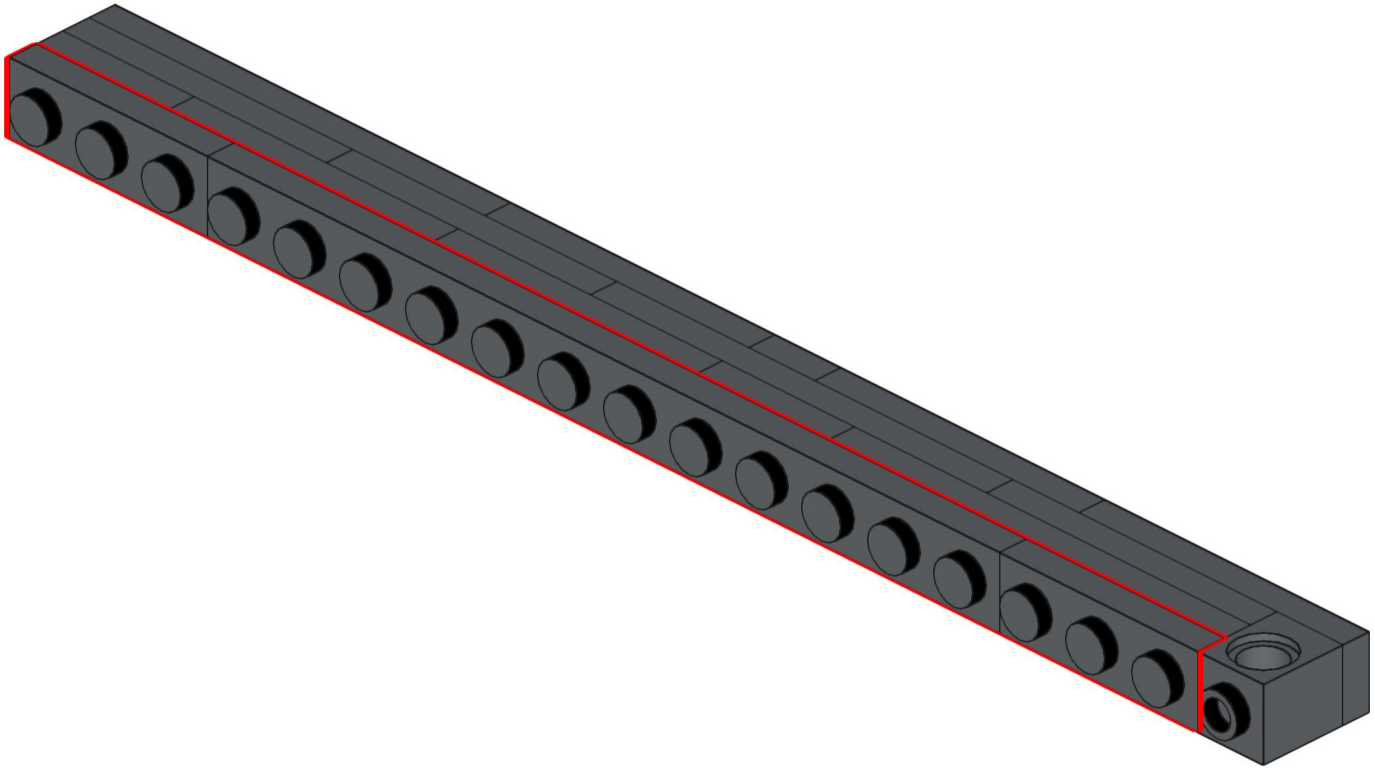

# 15

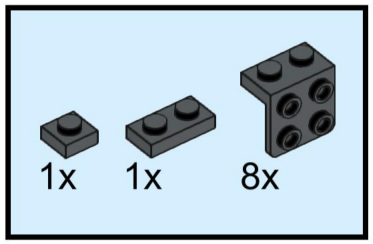


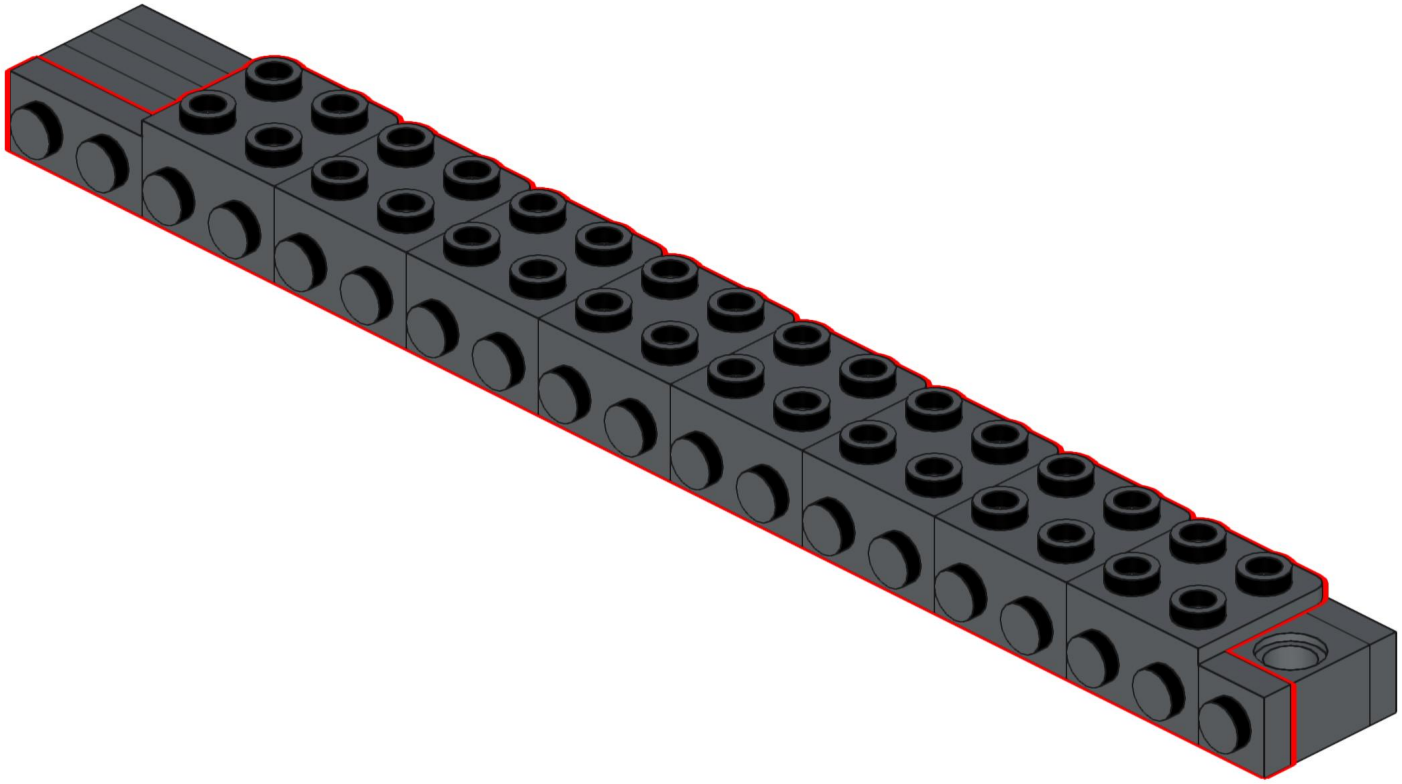

# 16

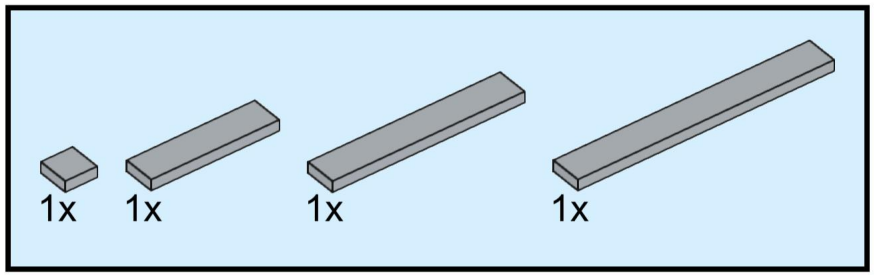


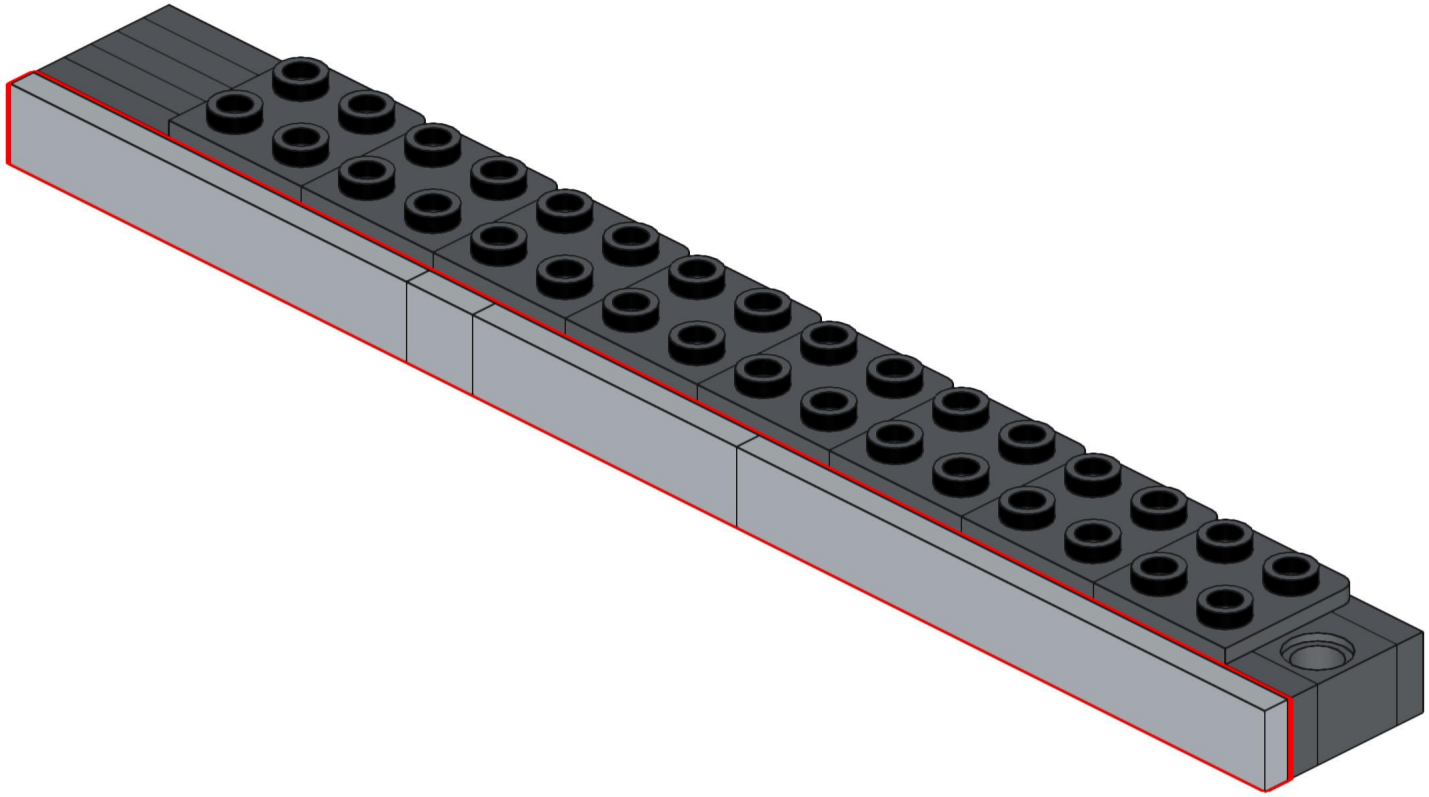

# 17

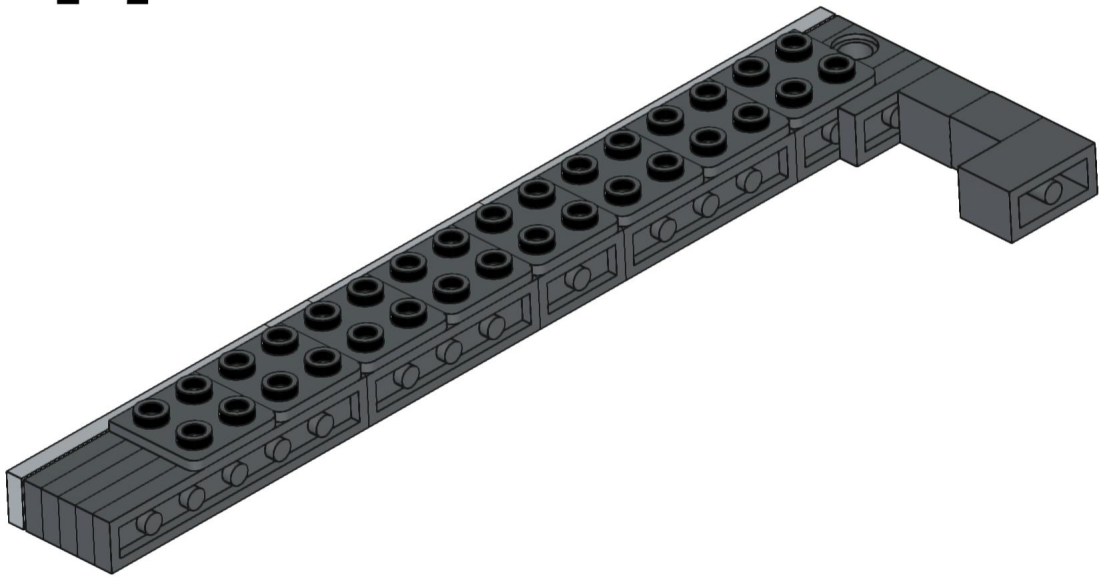

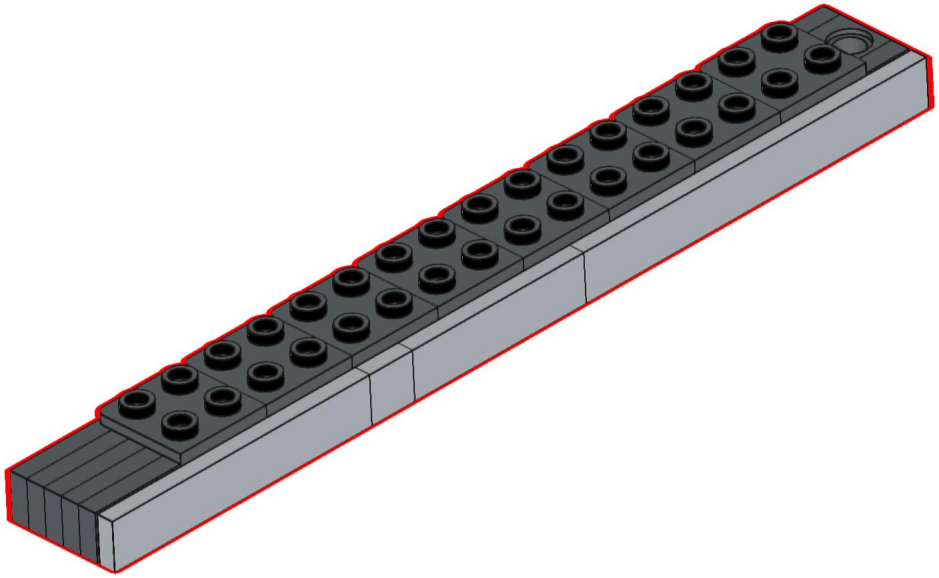

# 18

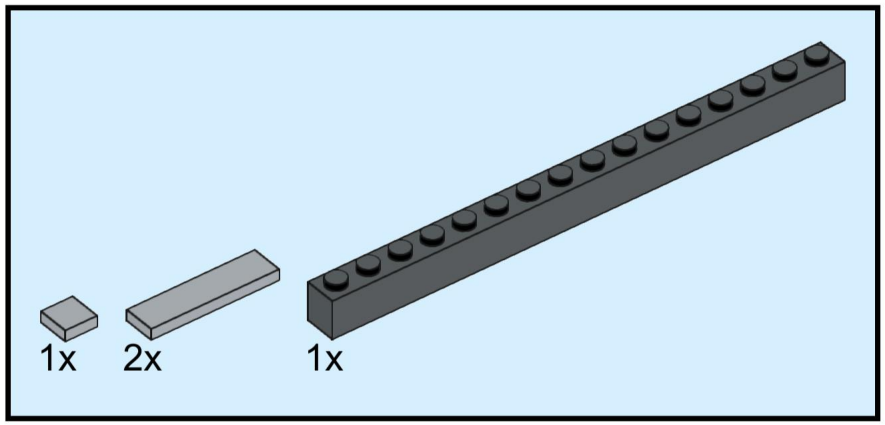


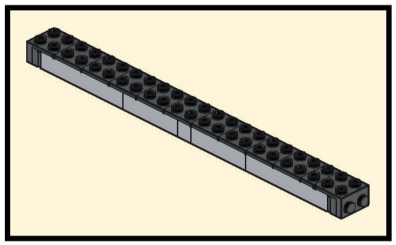

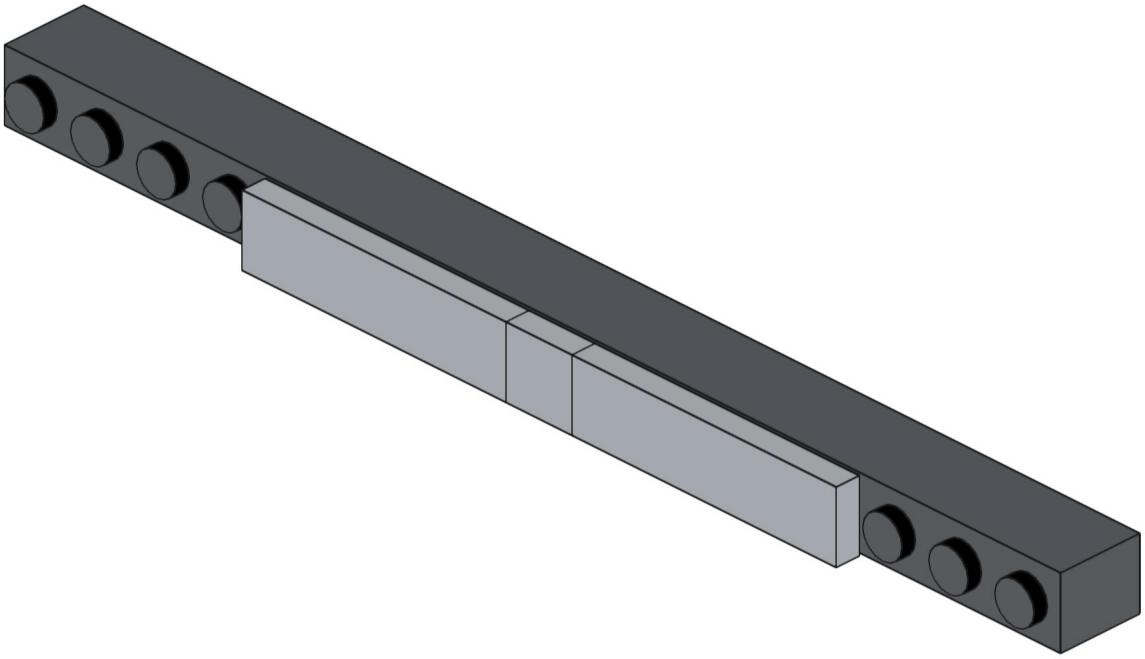

# 19

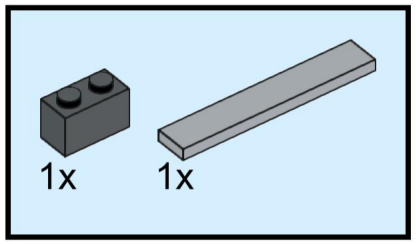


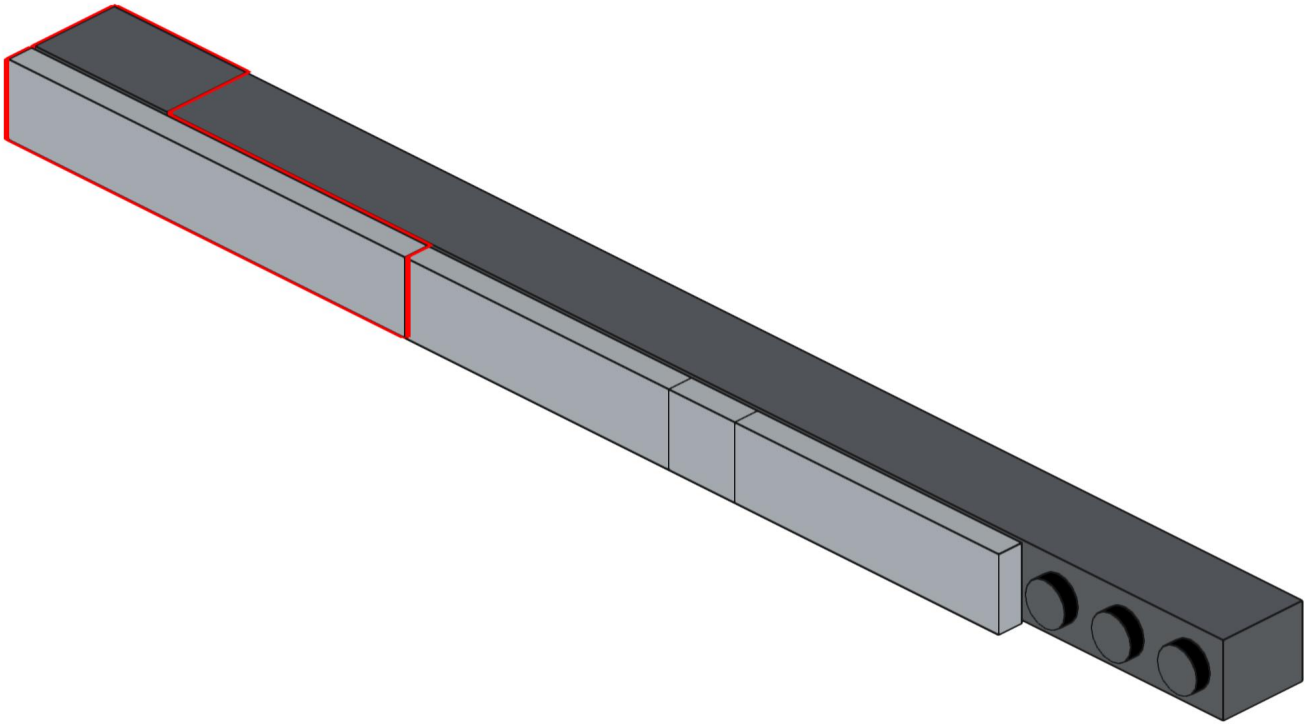

# 20

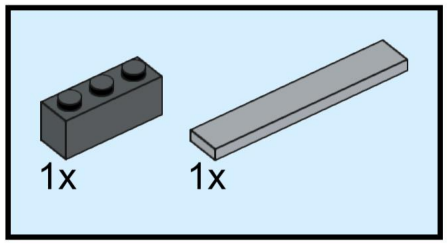


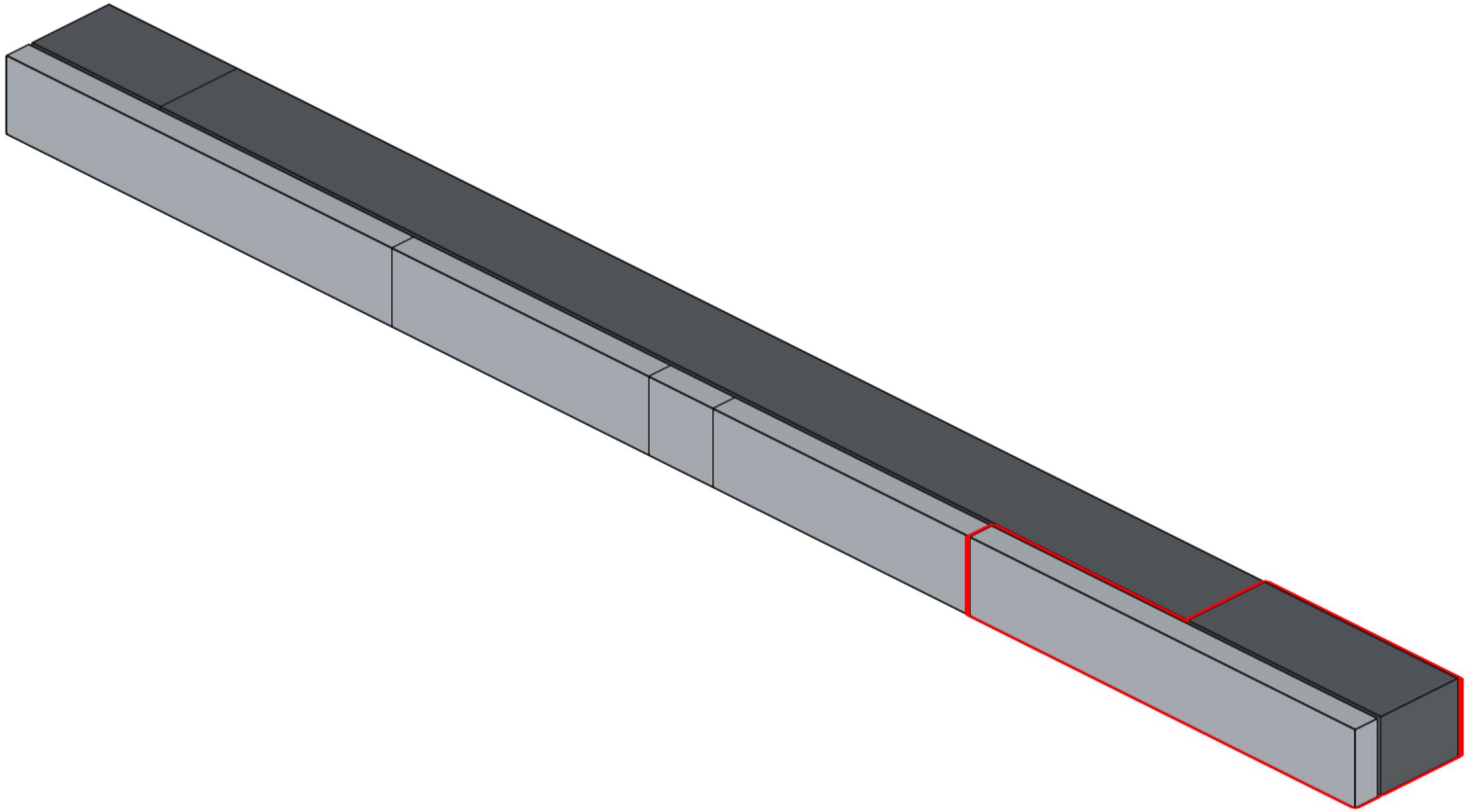

# 21

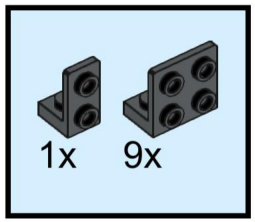


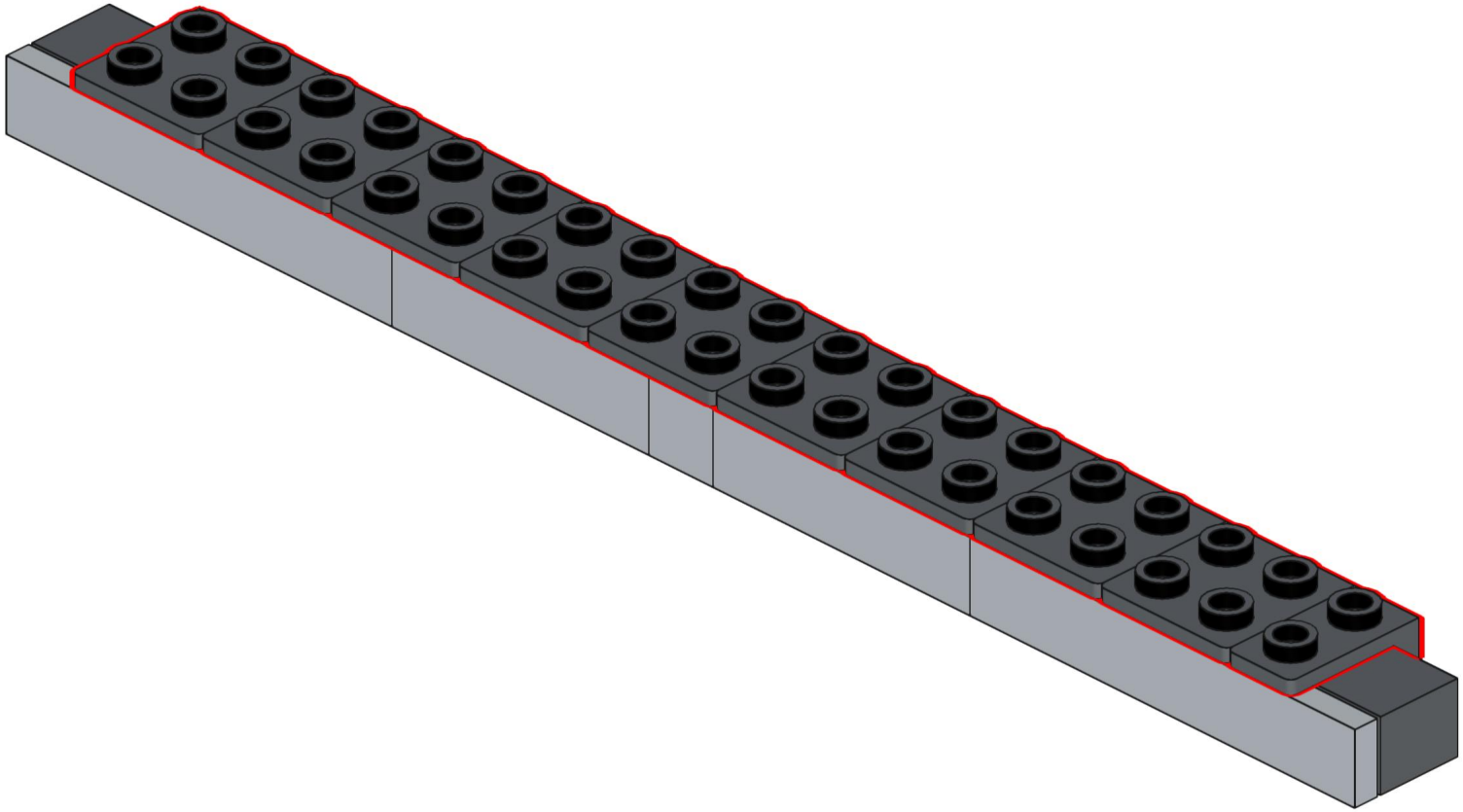

# 22

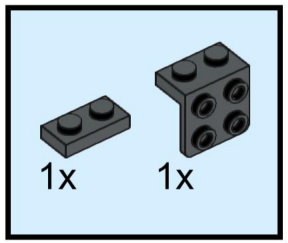


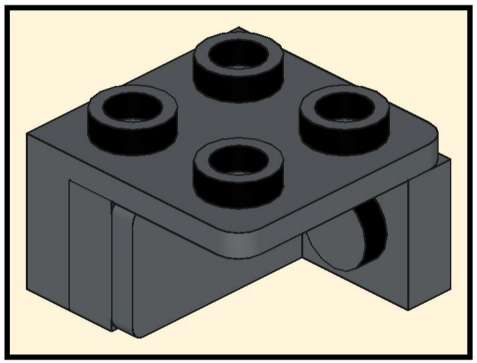

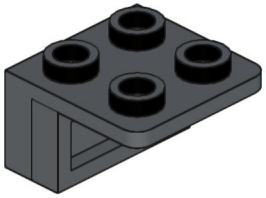

# 23

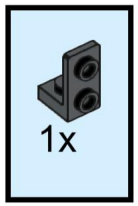


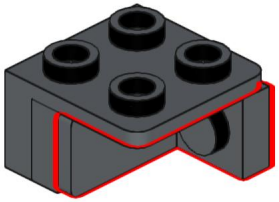

# 24

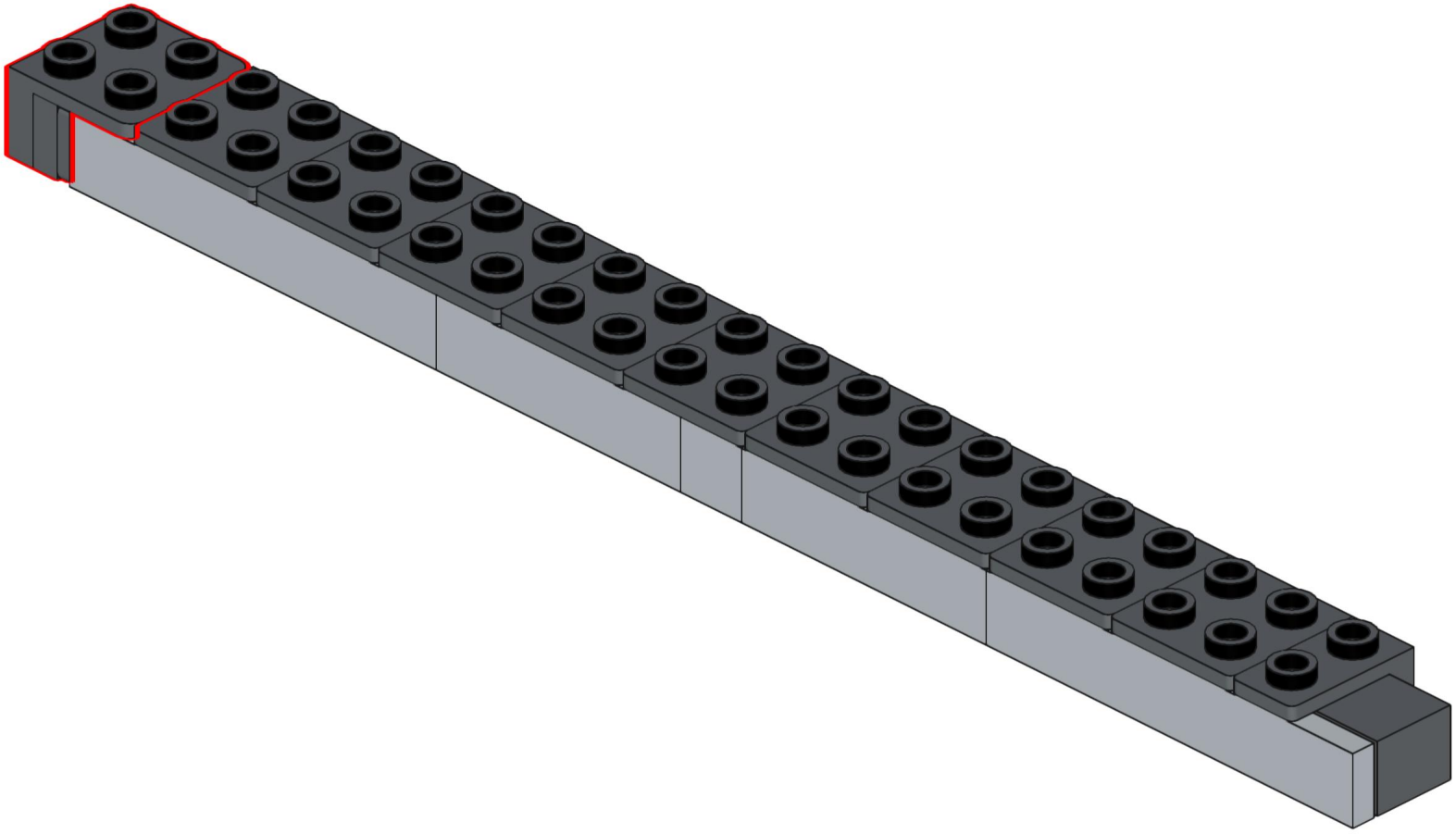

# 25

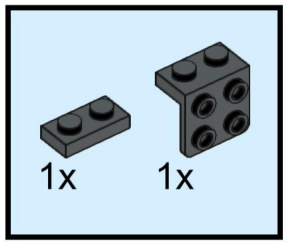


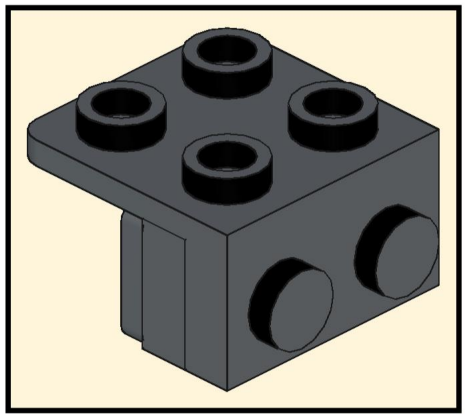

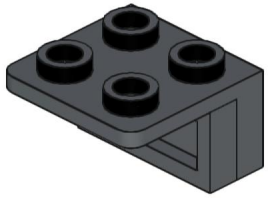

# 26

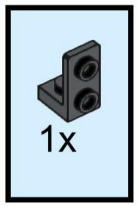


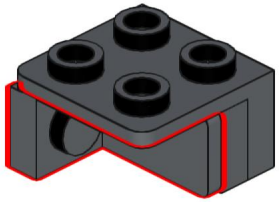

# 27

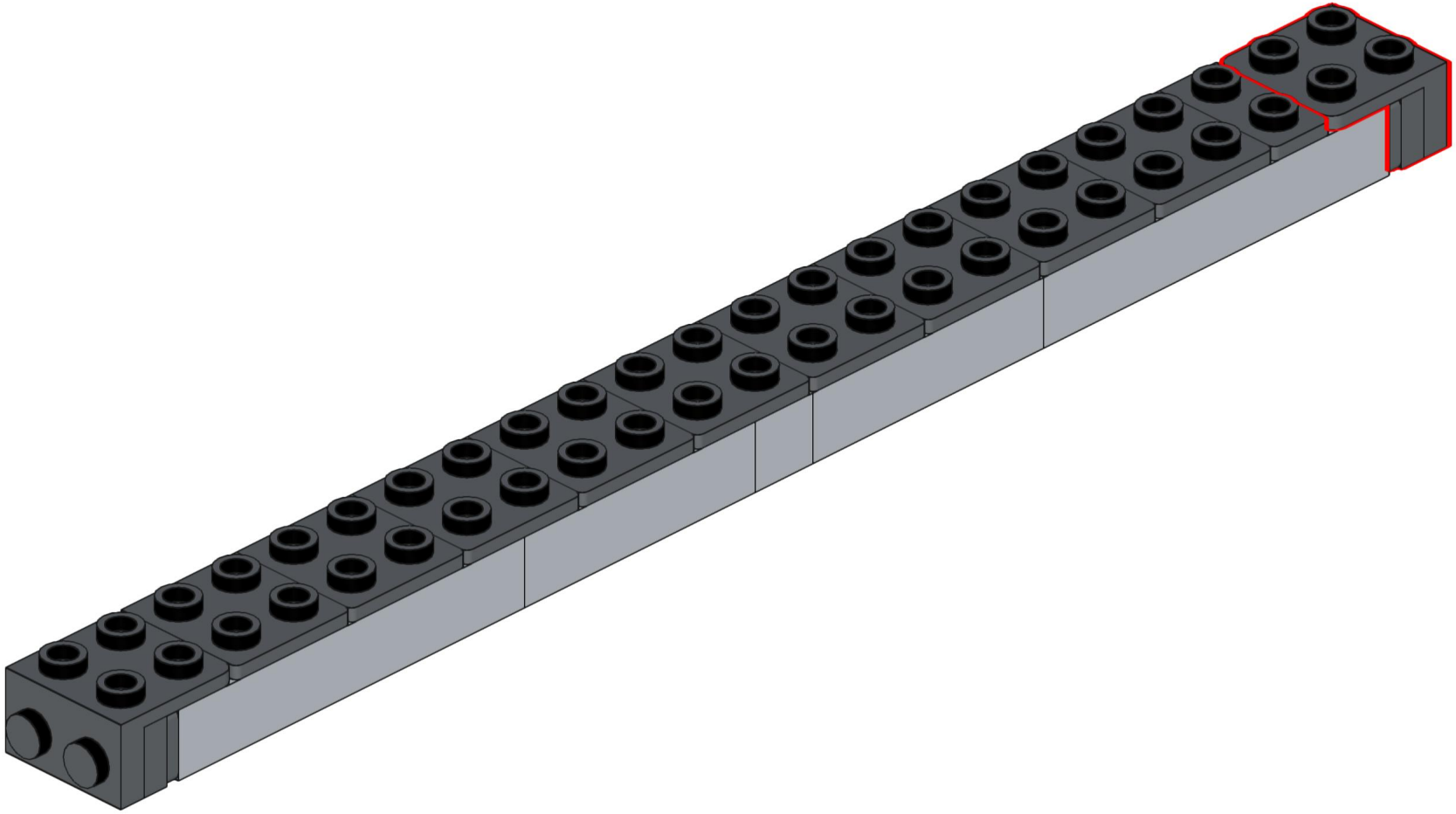

# 28

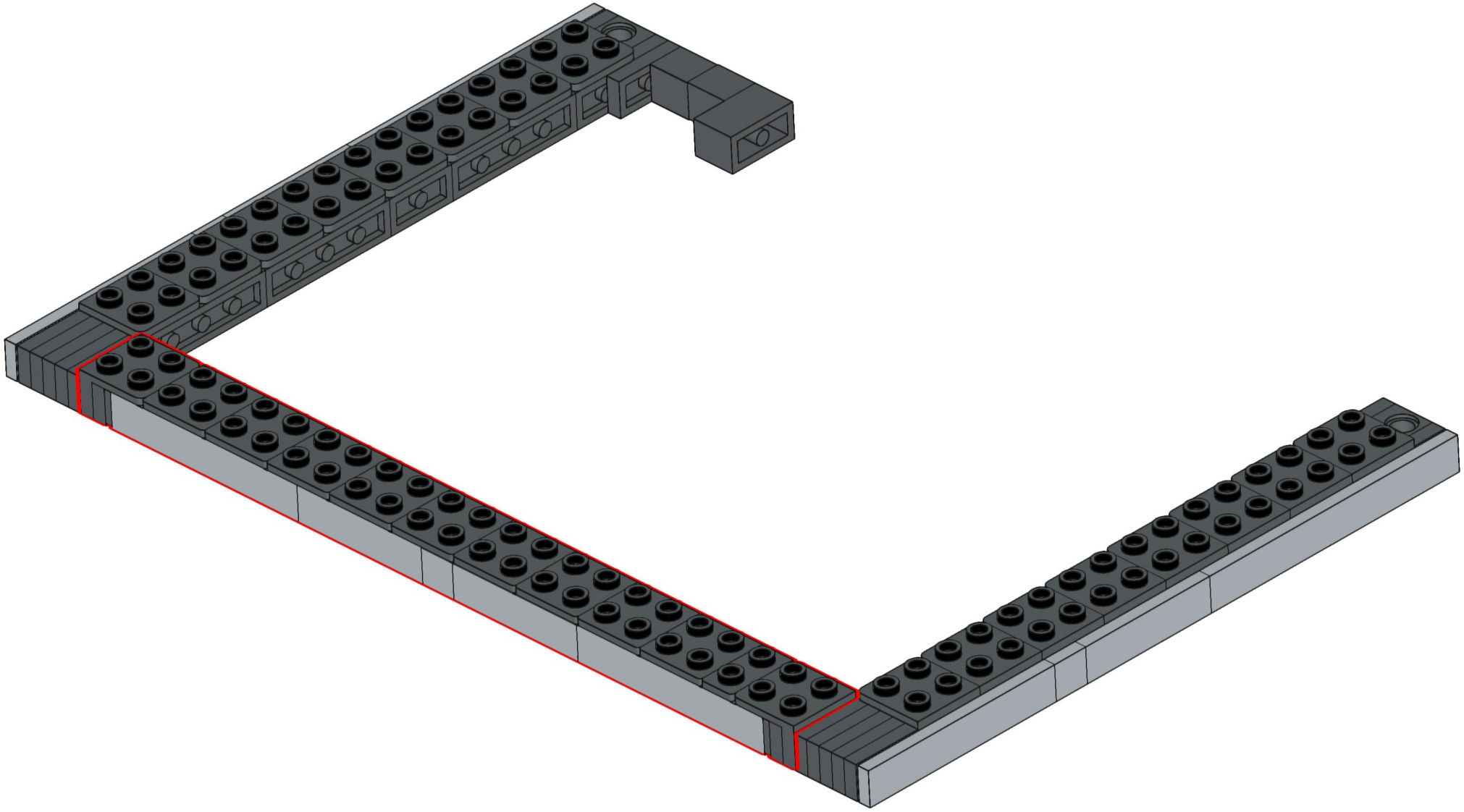

# 29

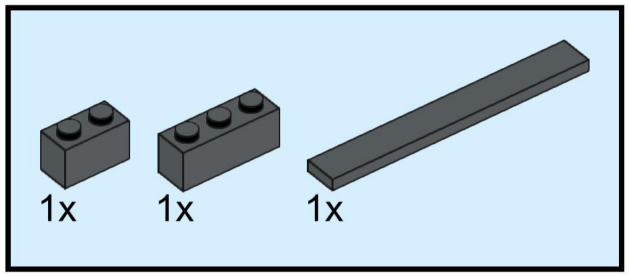


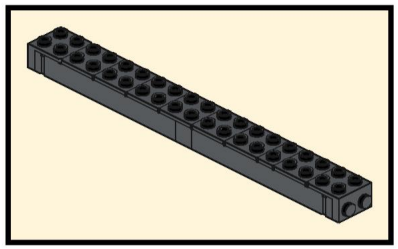

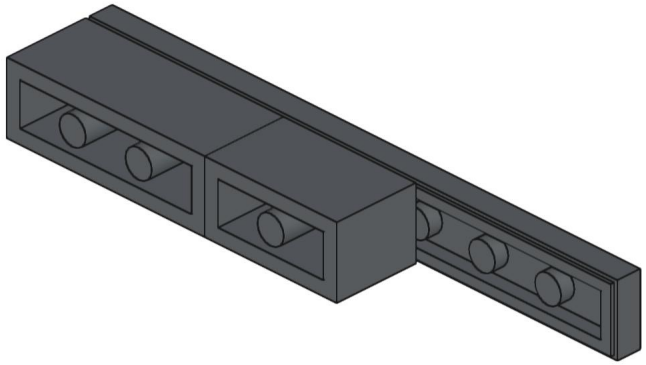

# 30

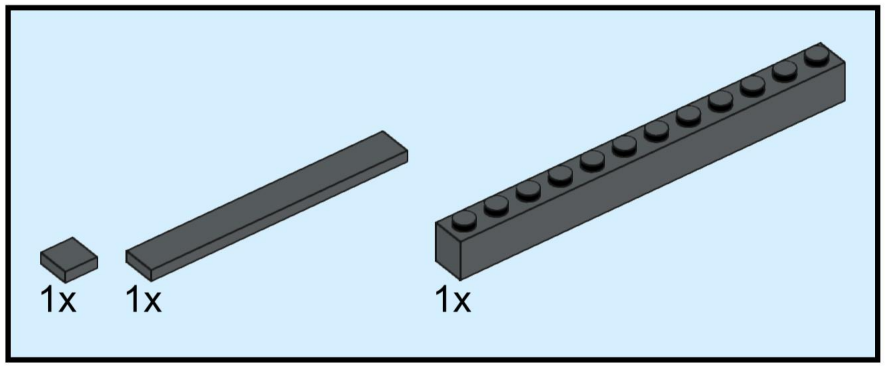


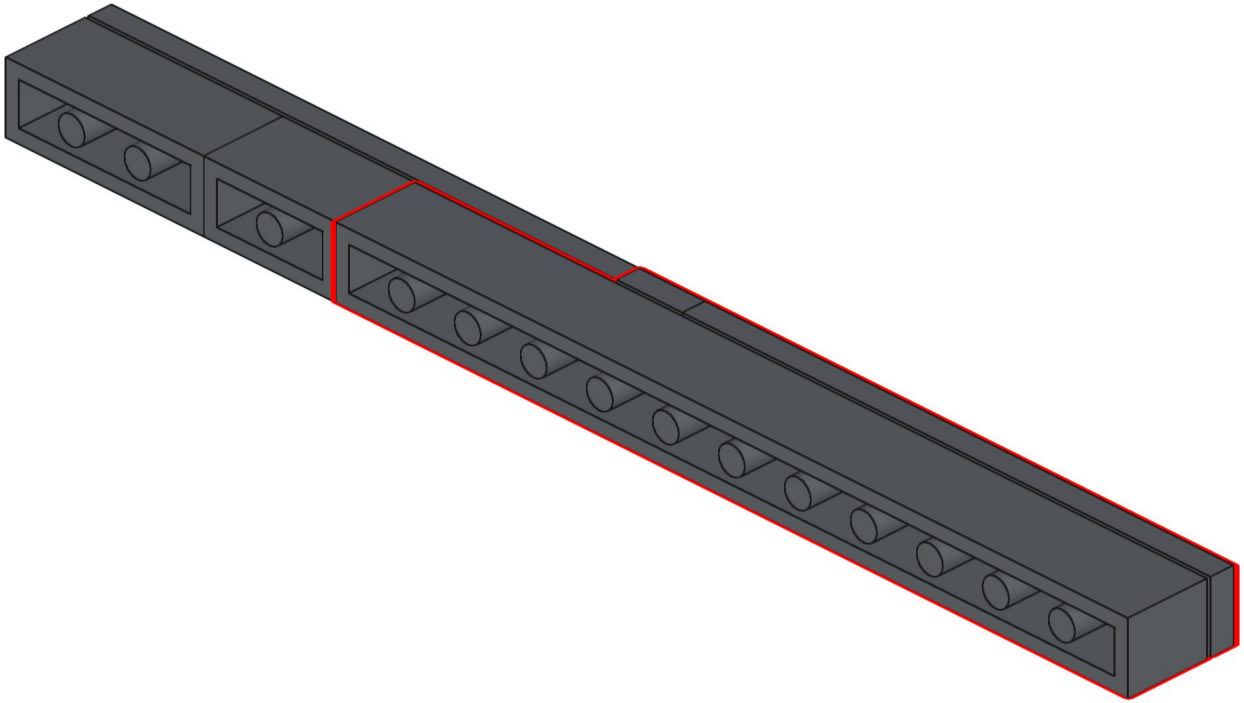

# 31

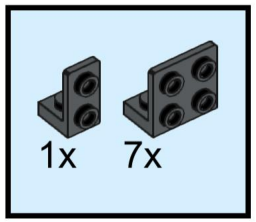


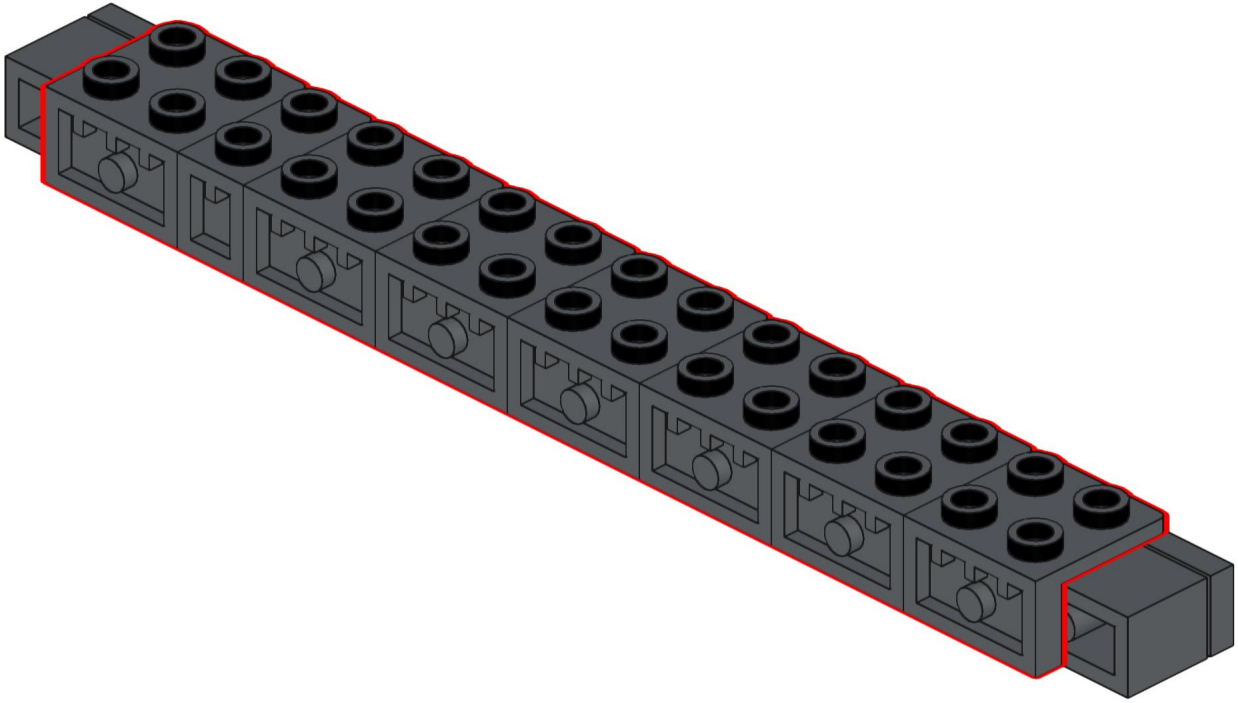

# 32

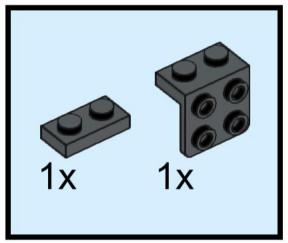


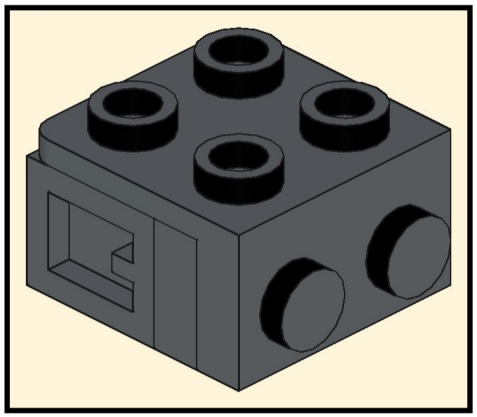

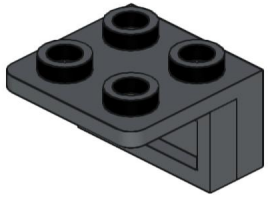

# 33

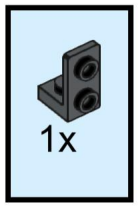


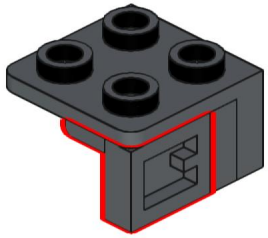

# 34

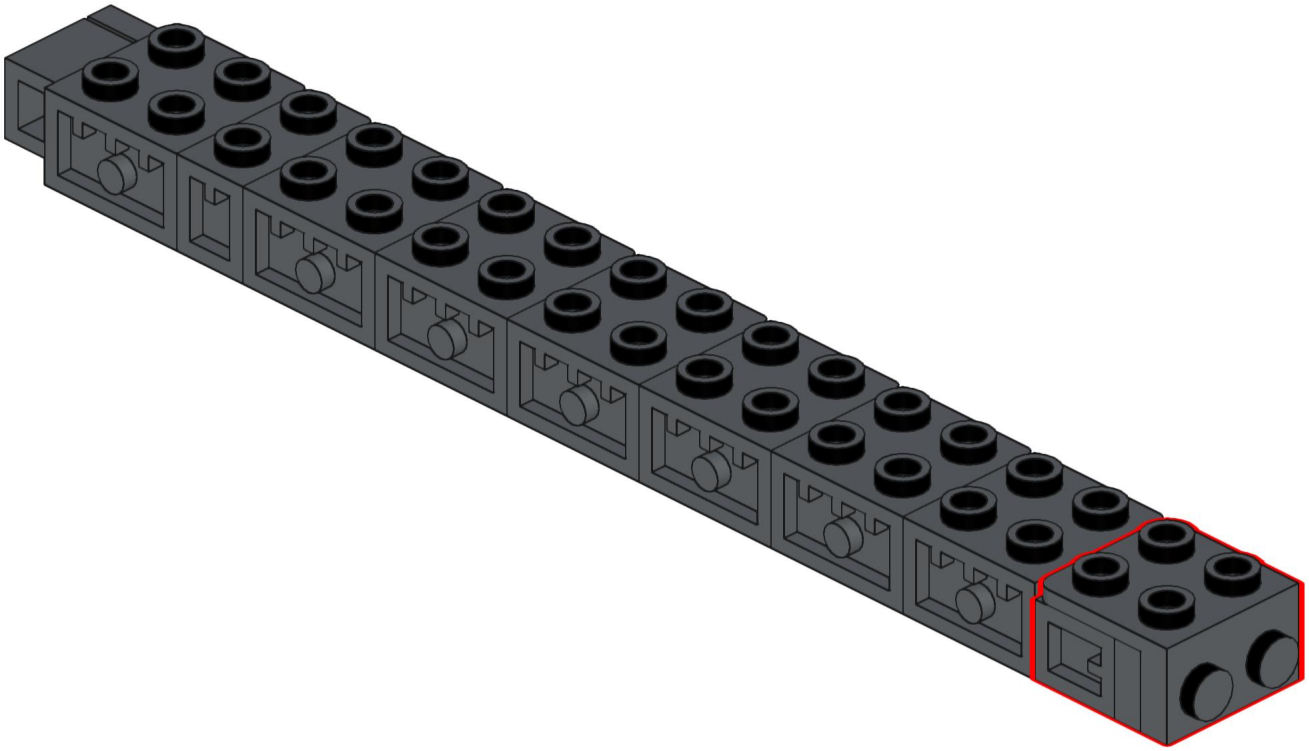

# 35

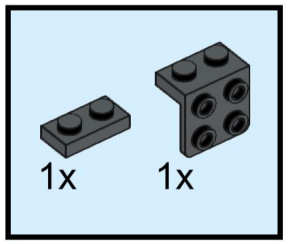


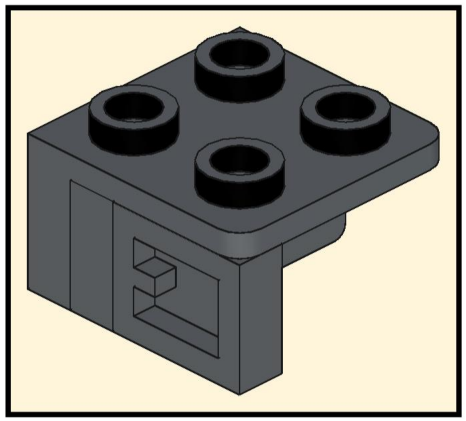

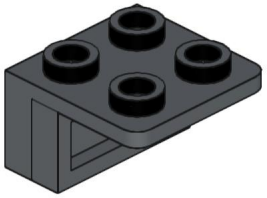

# 36

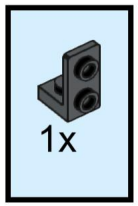


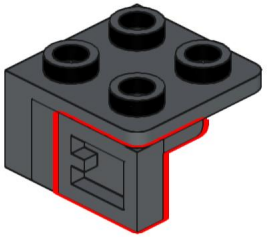

# 37

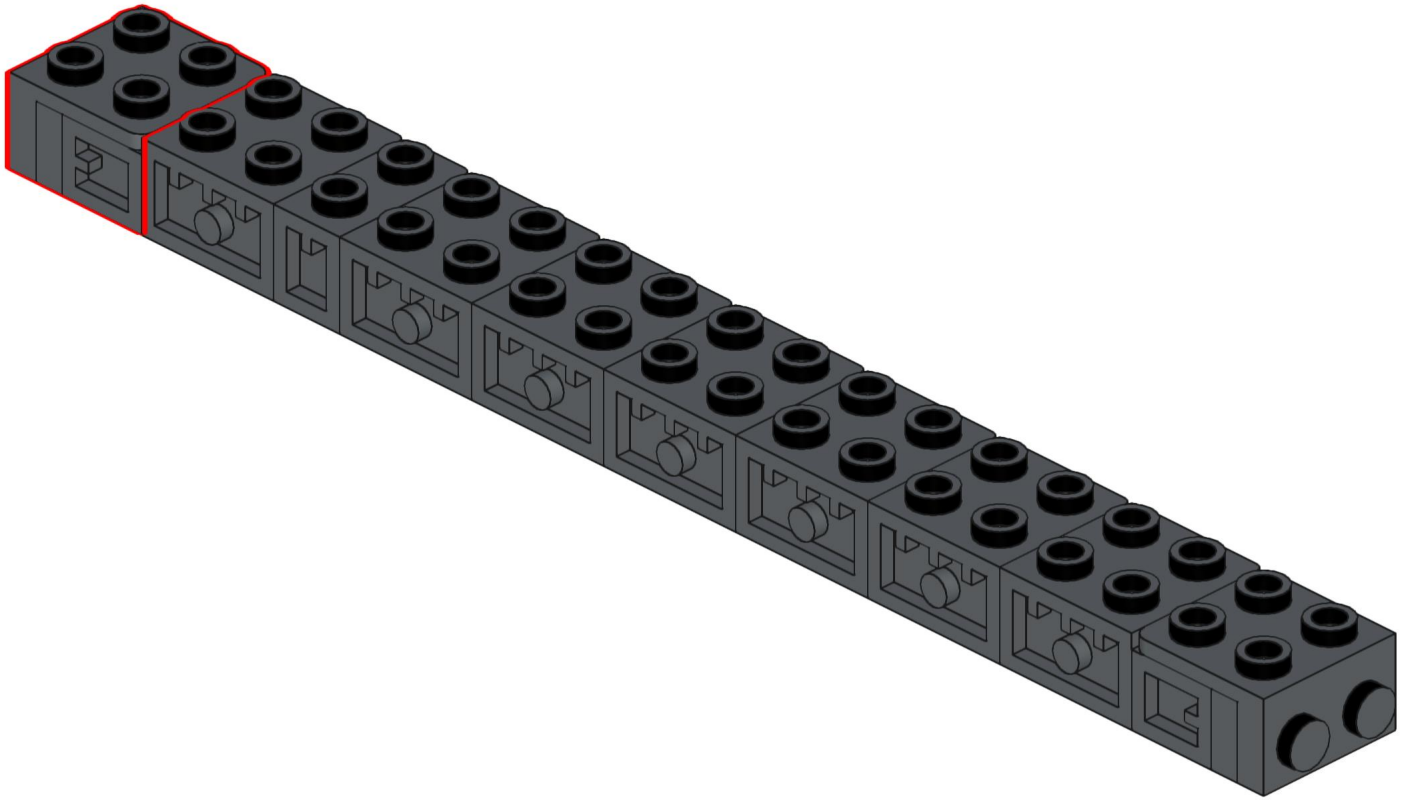

# 38

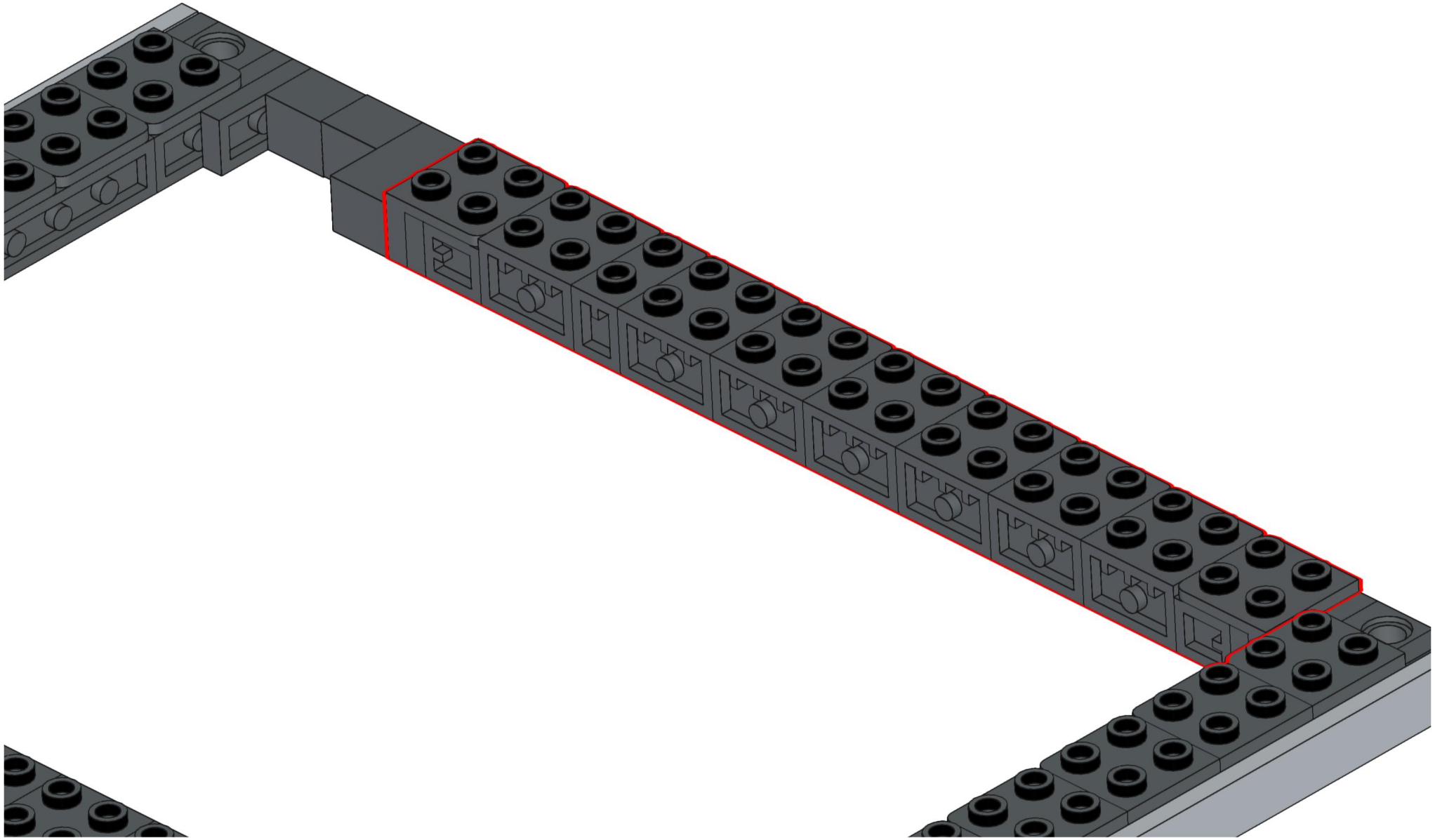

# 39

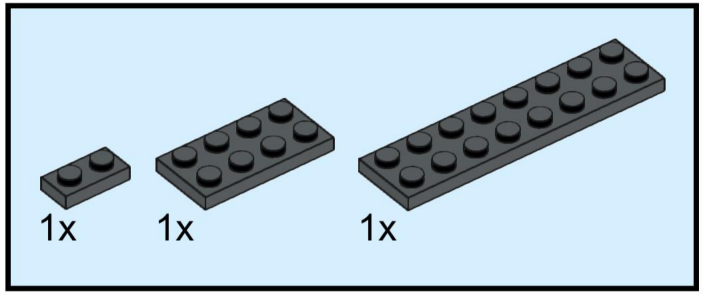


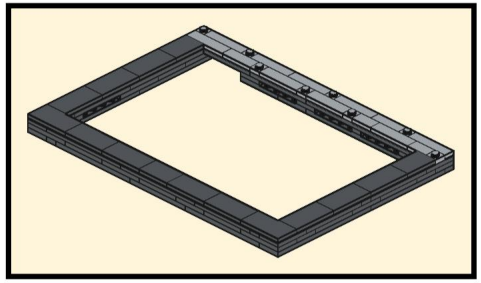

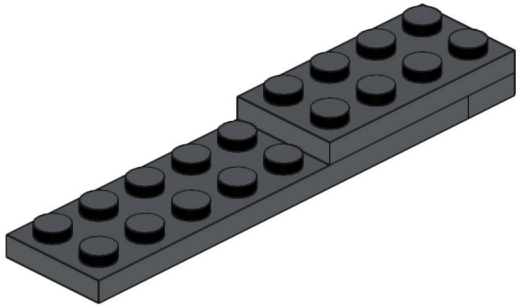

# 40

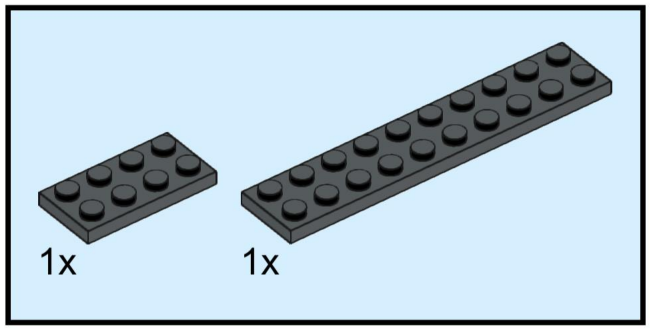


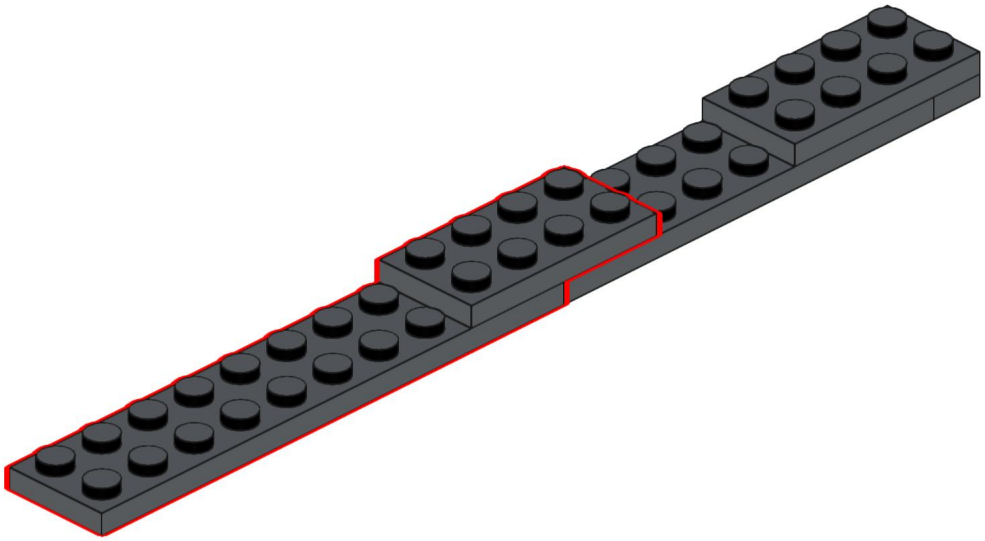

# 41

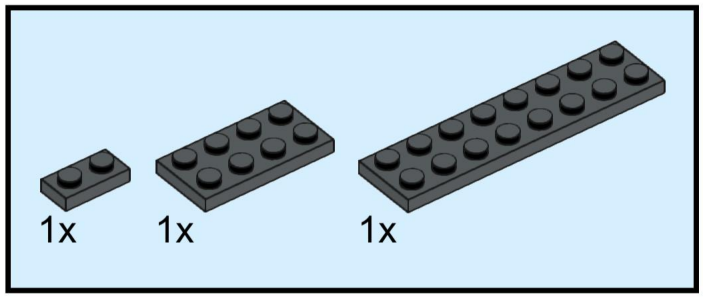


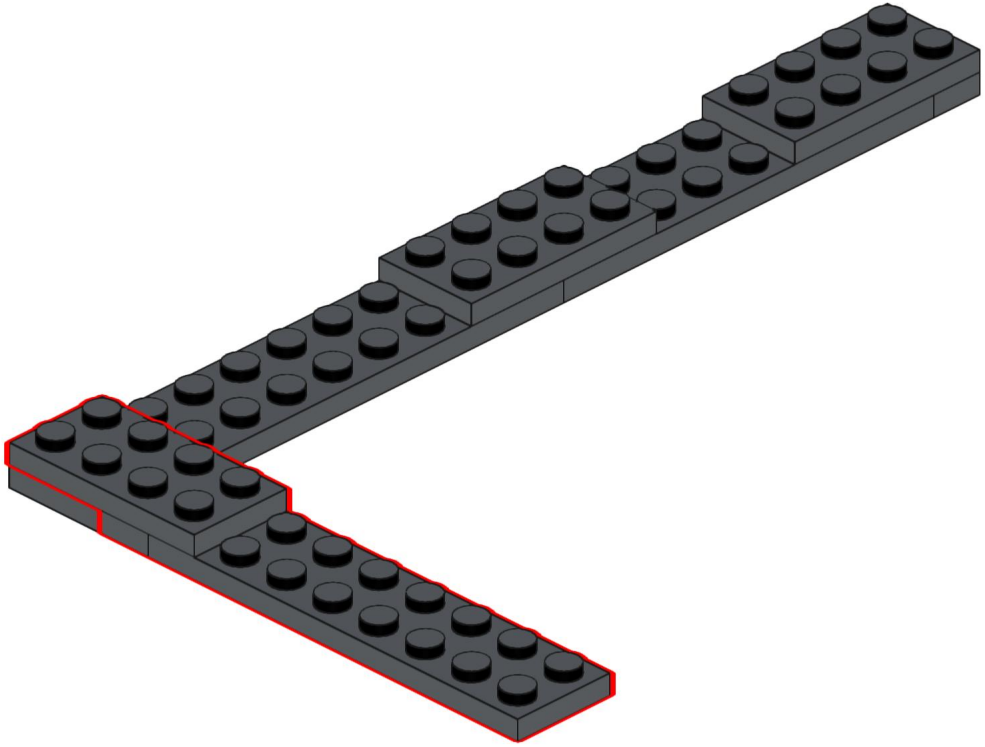

# 42

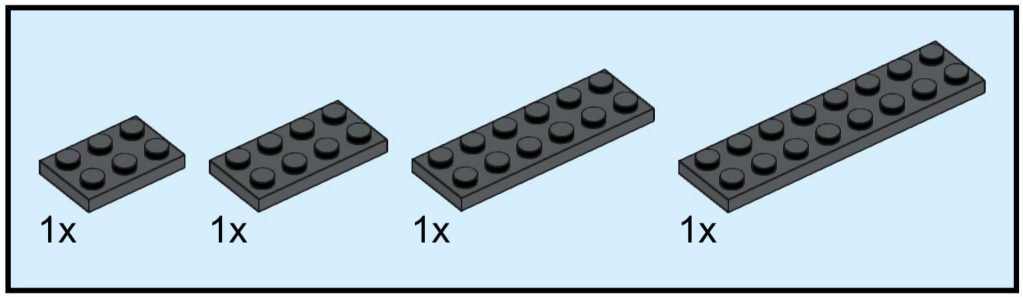


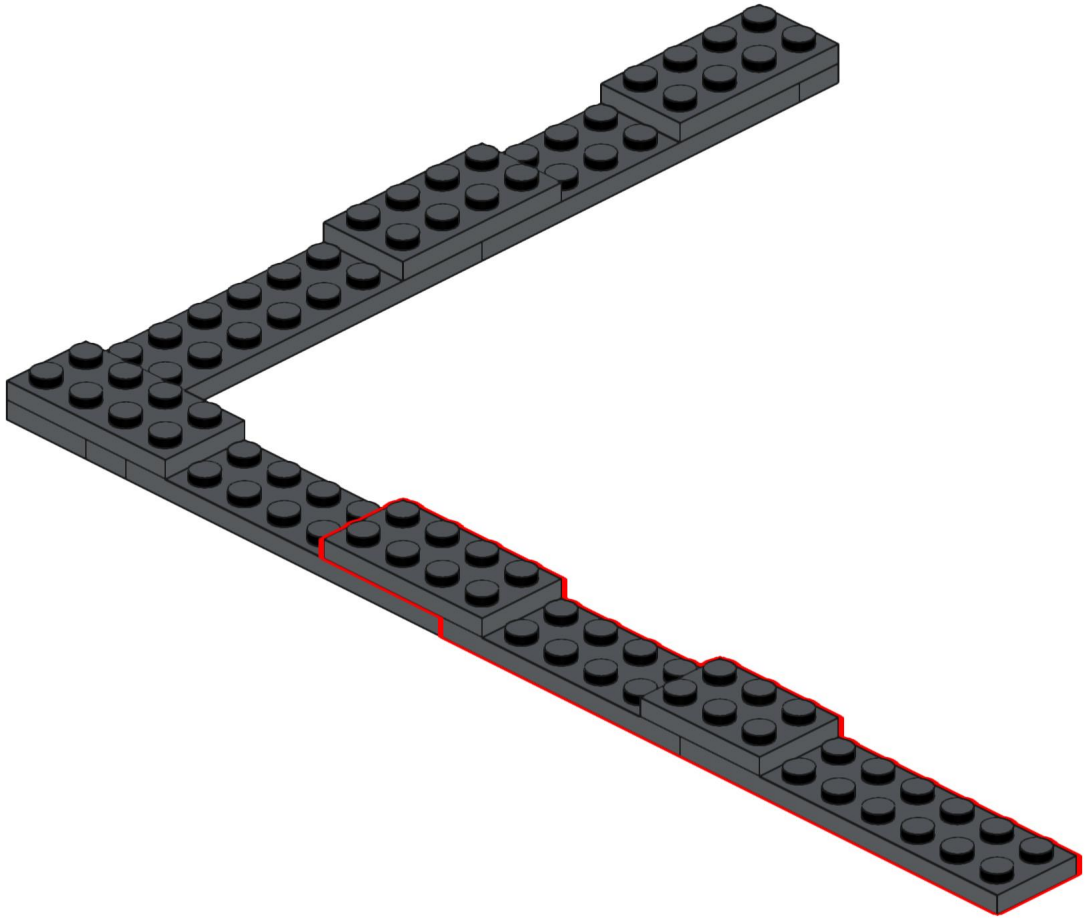

# 43

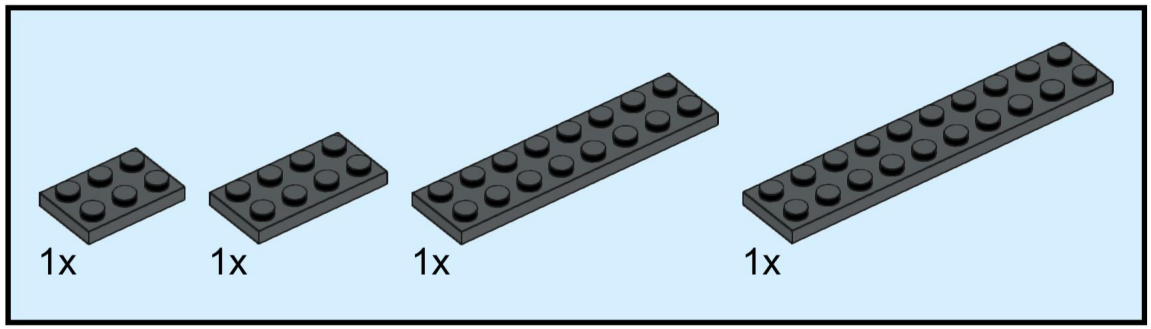


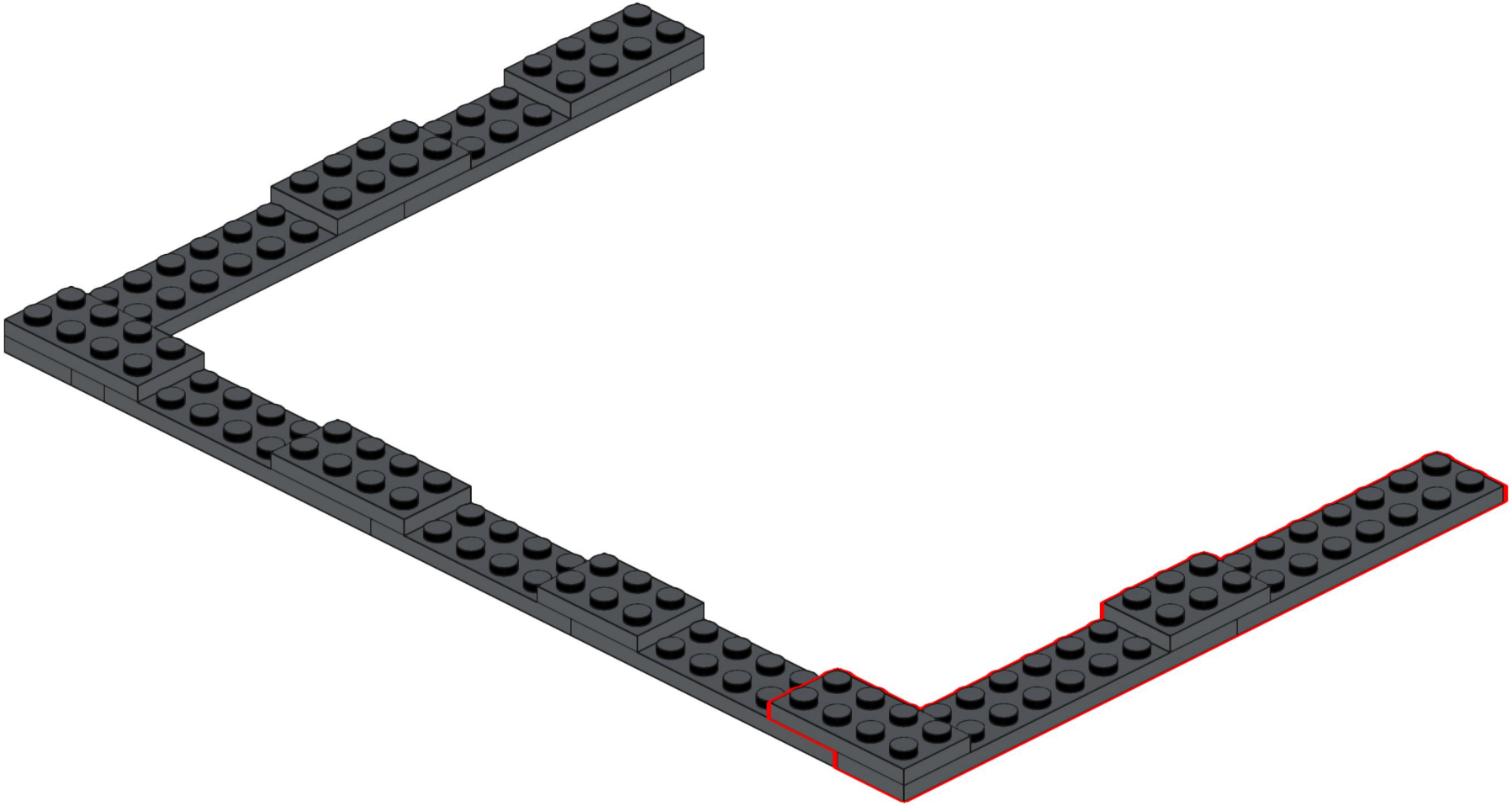

# 44

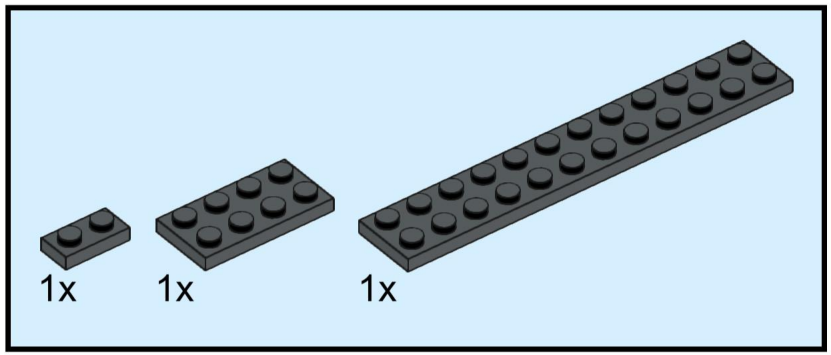


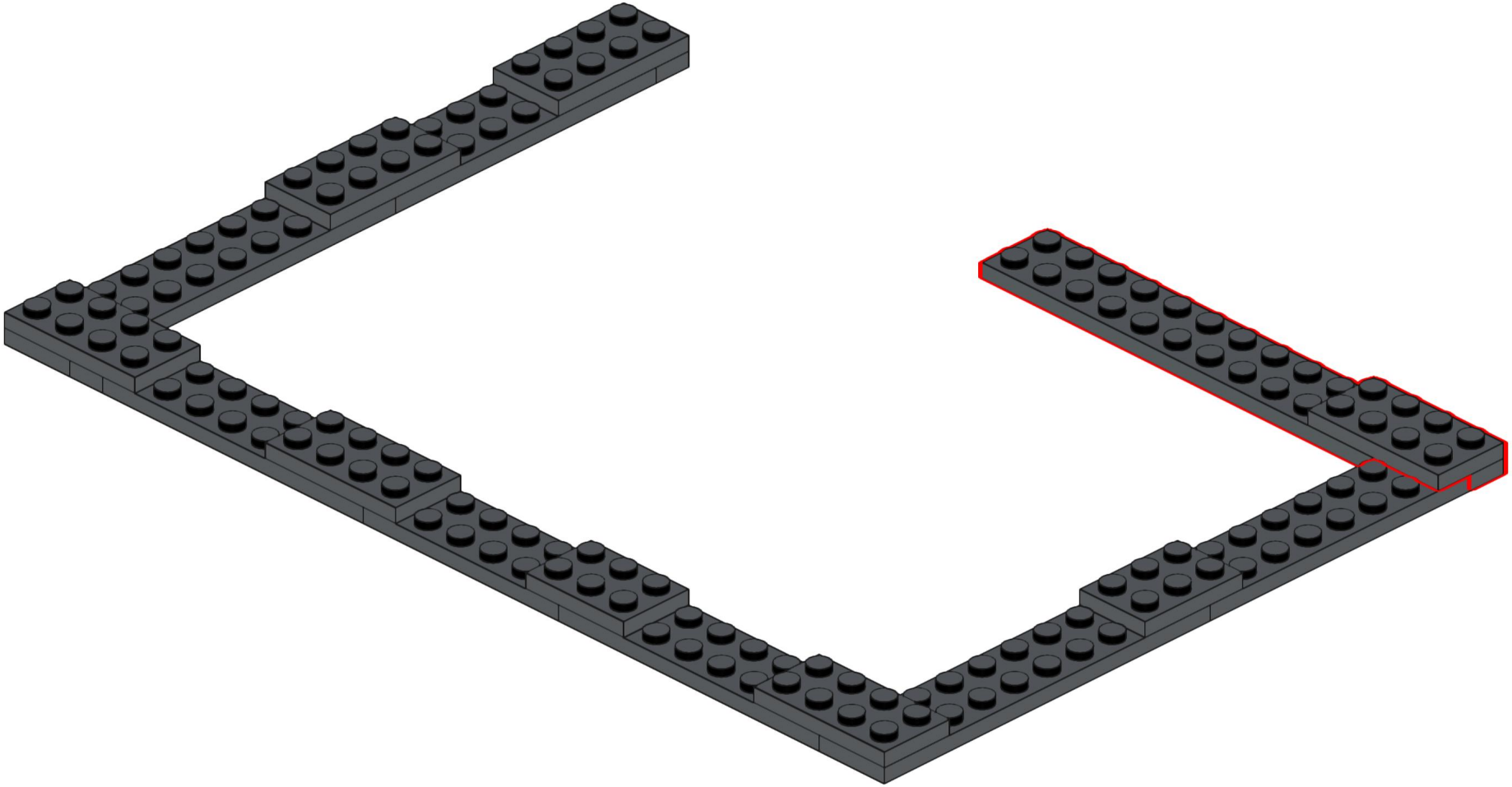

# 45

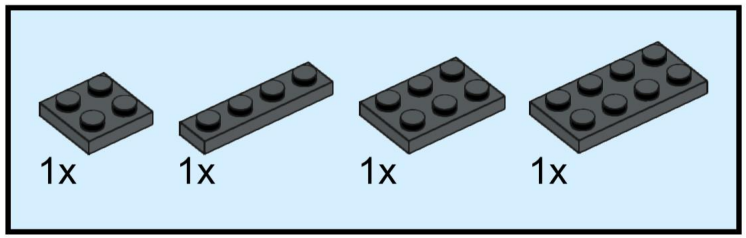


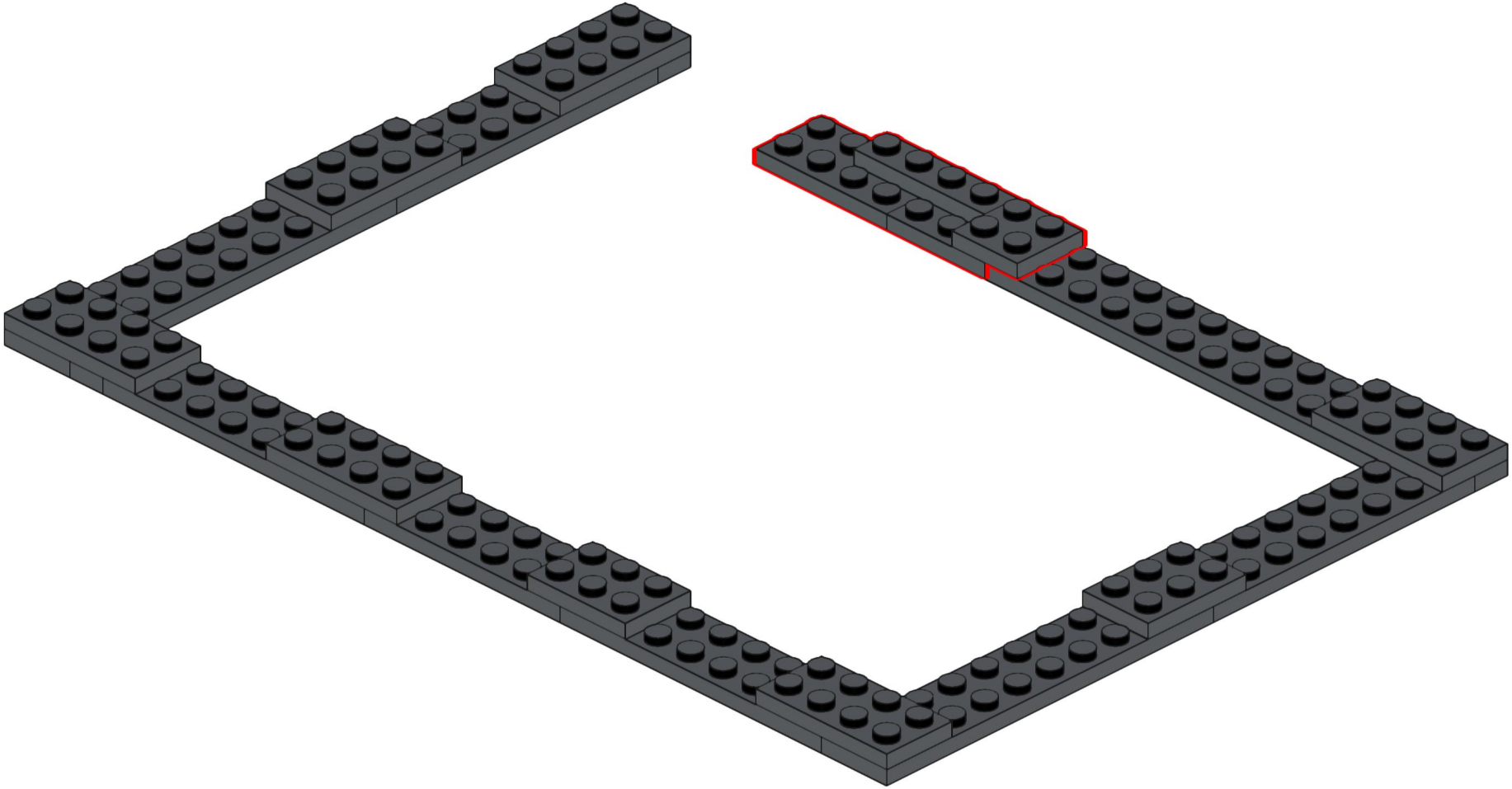

# 46

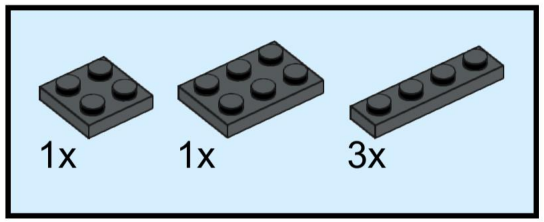


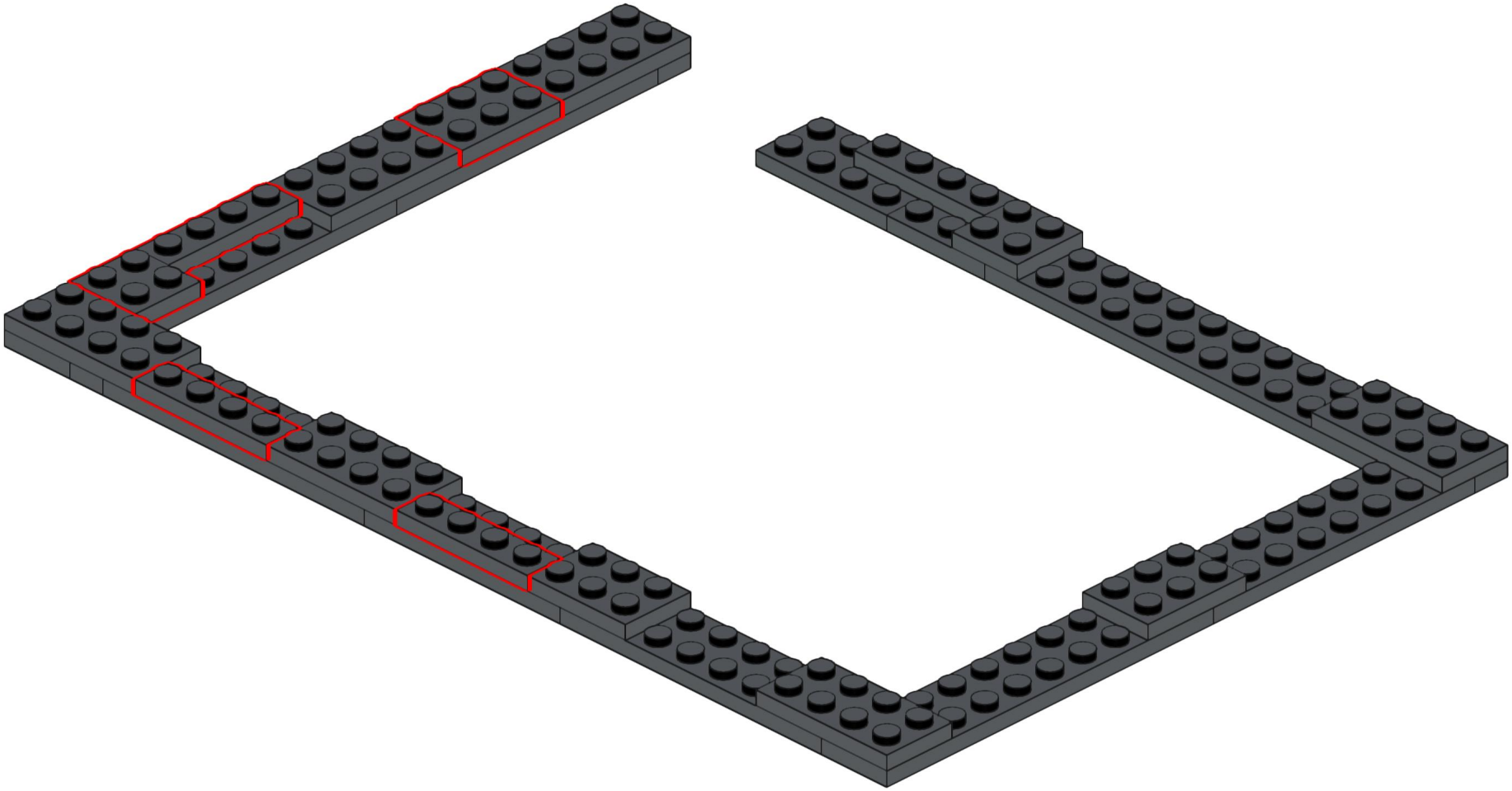

# 47

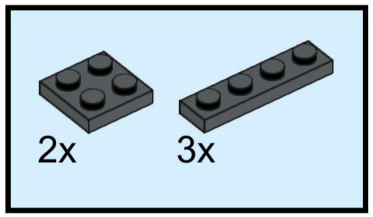


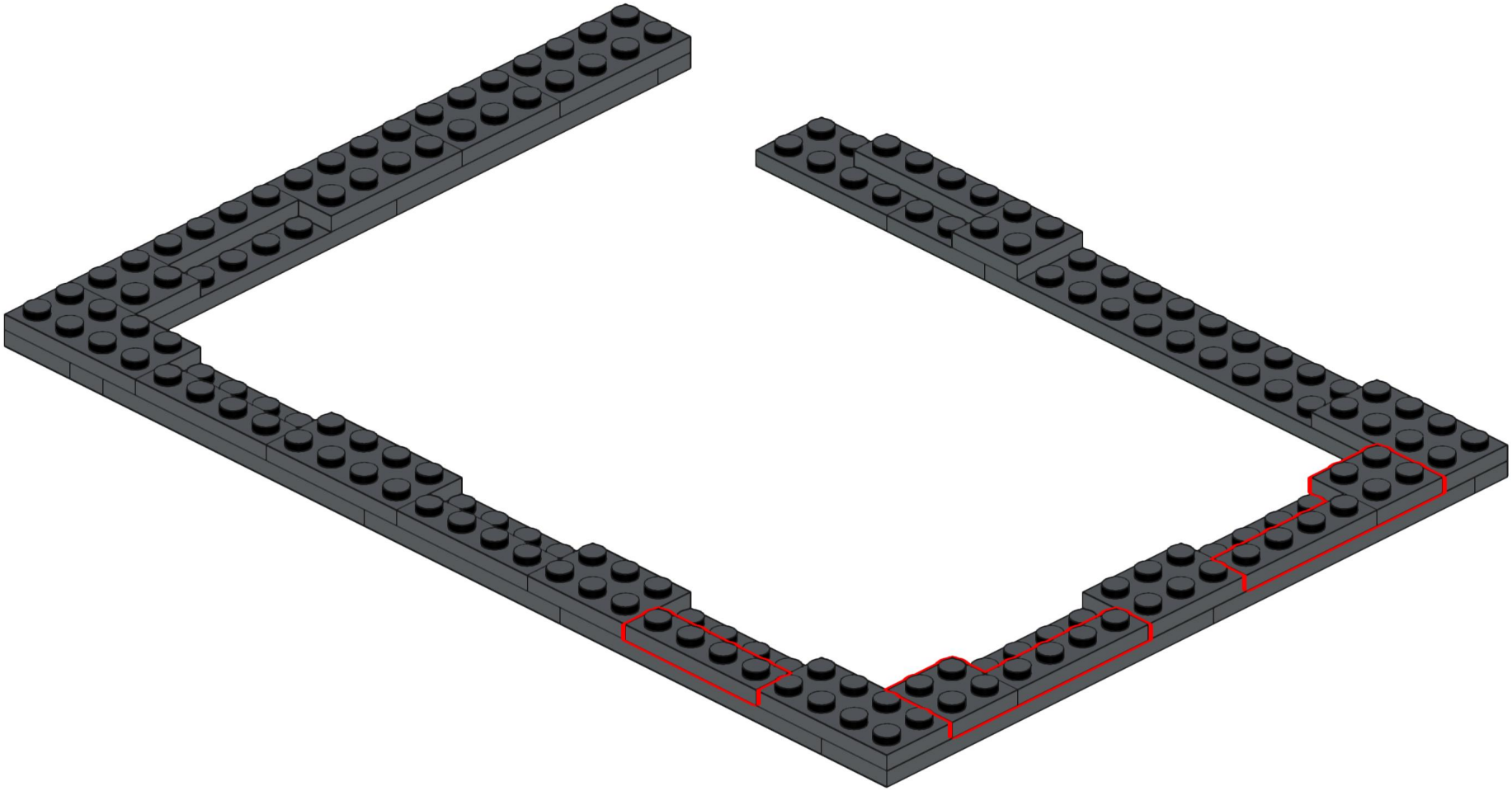

# 48

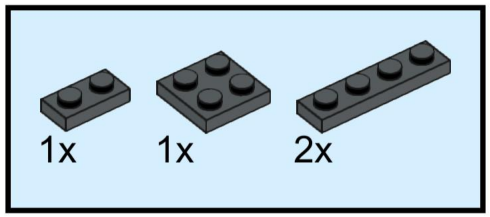


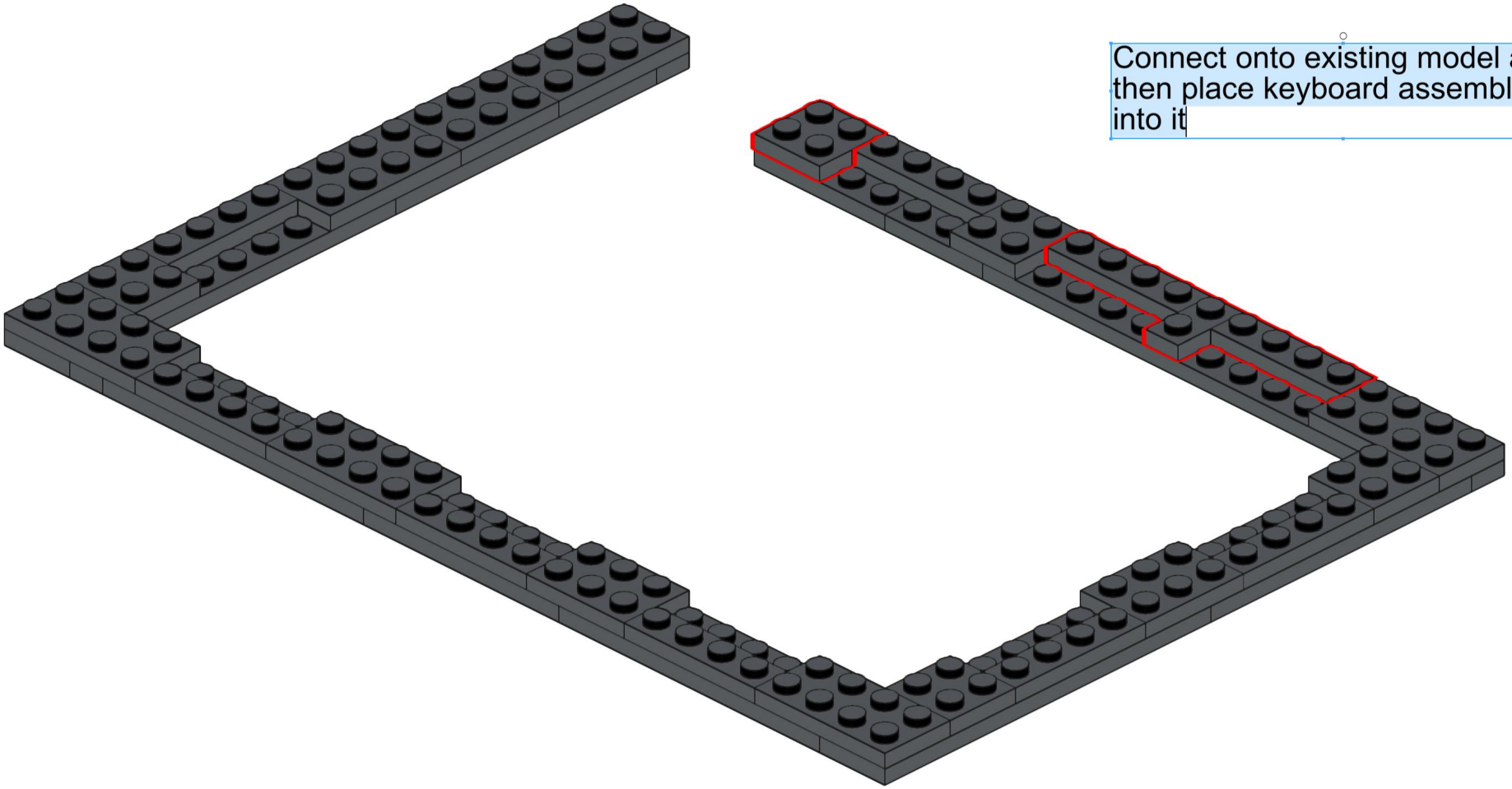

Connect onto existing model and then place keyboard assembly into it

# 49

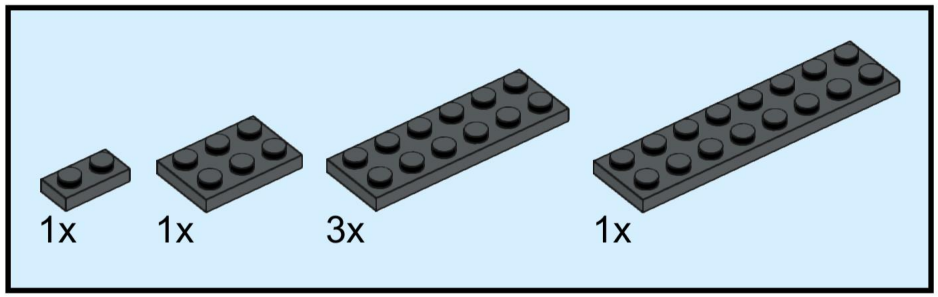


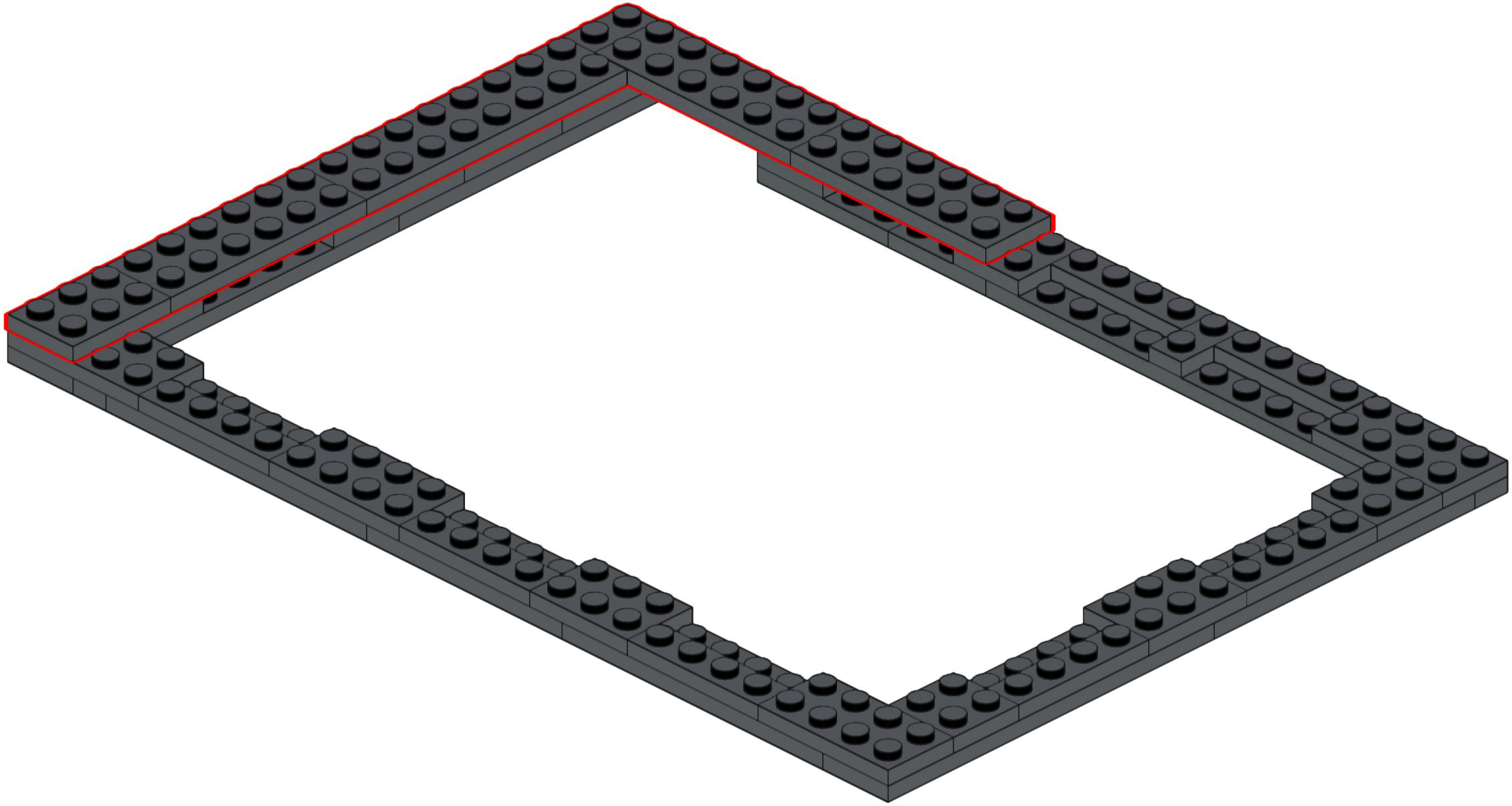

# 50

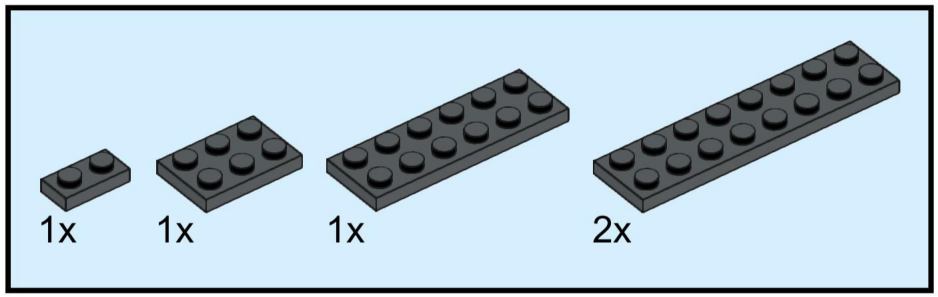


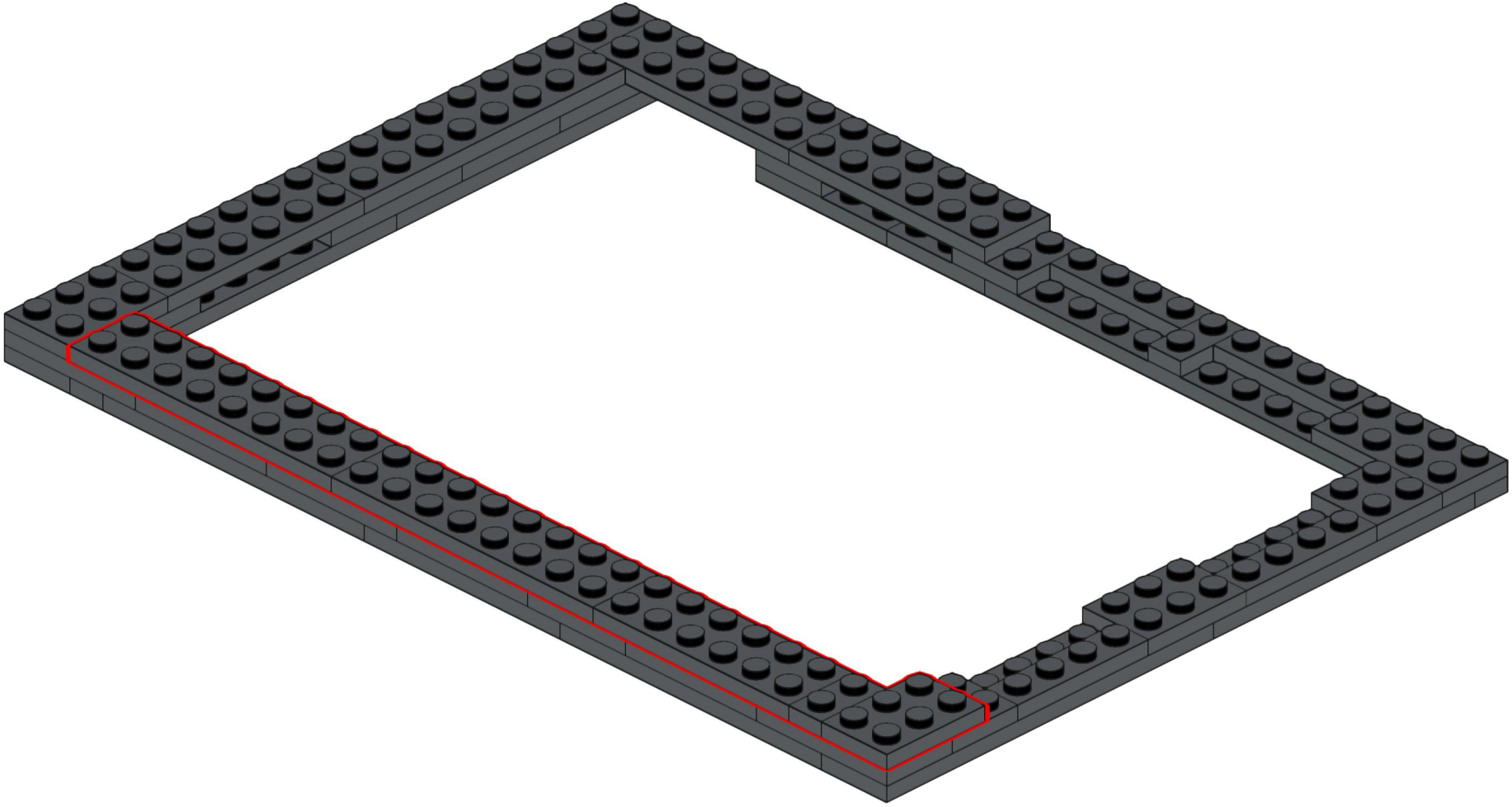

# 51

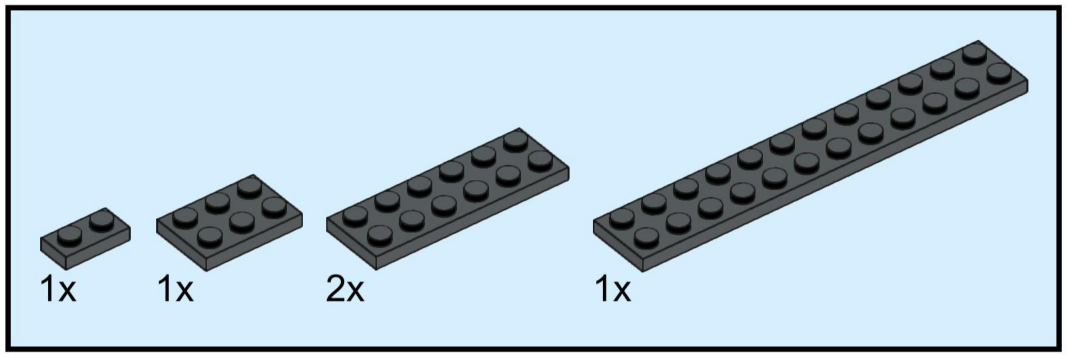


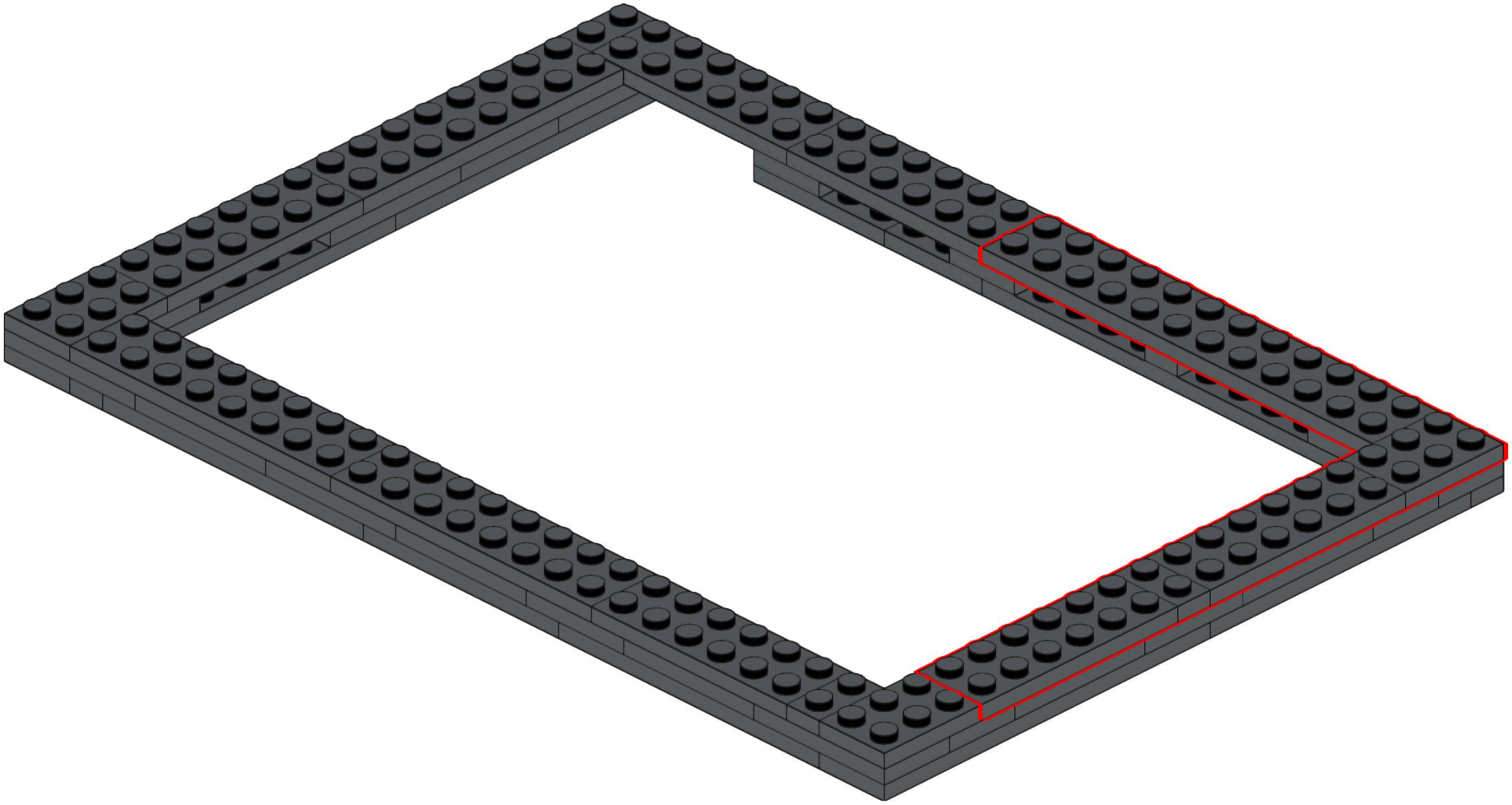

# 52

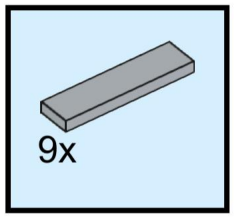


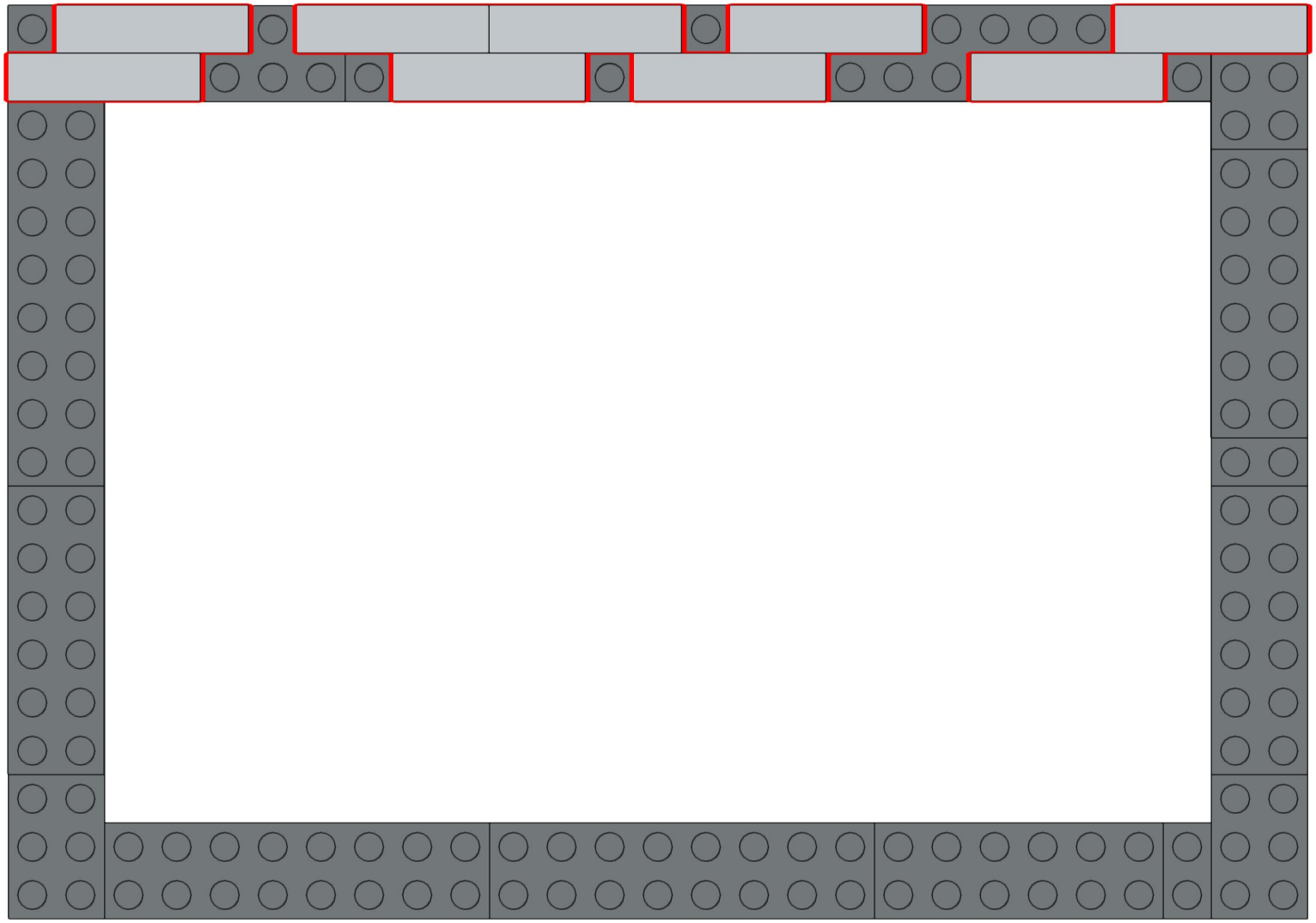

# 53

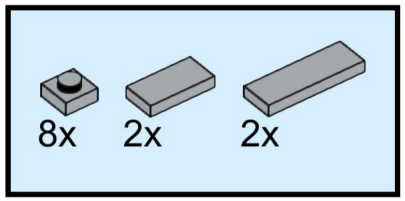


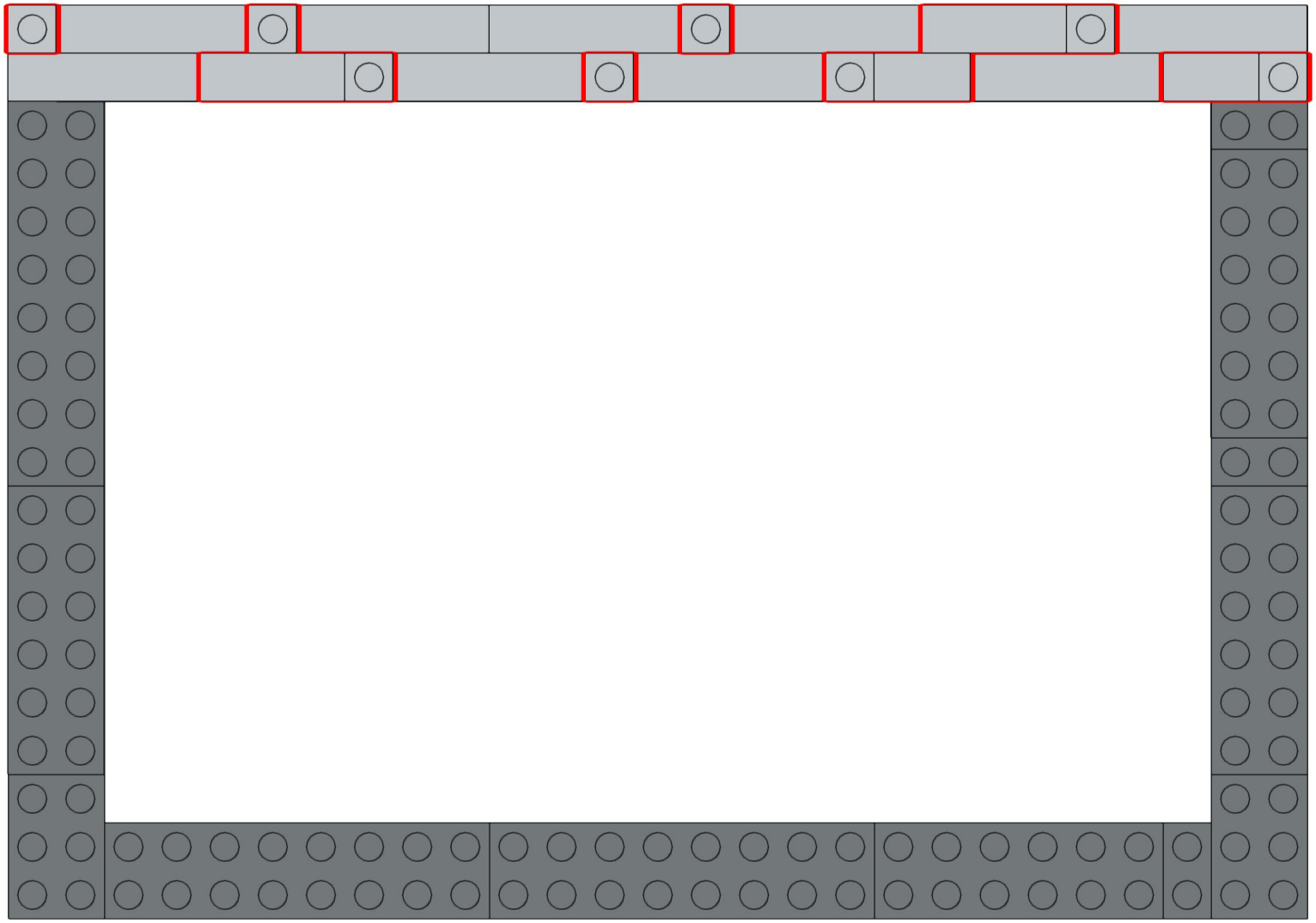

# 54

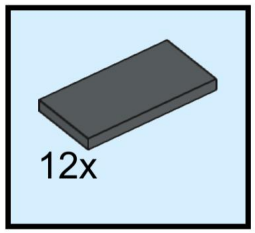


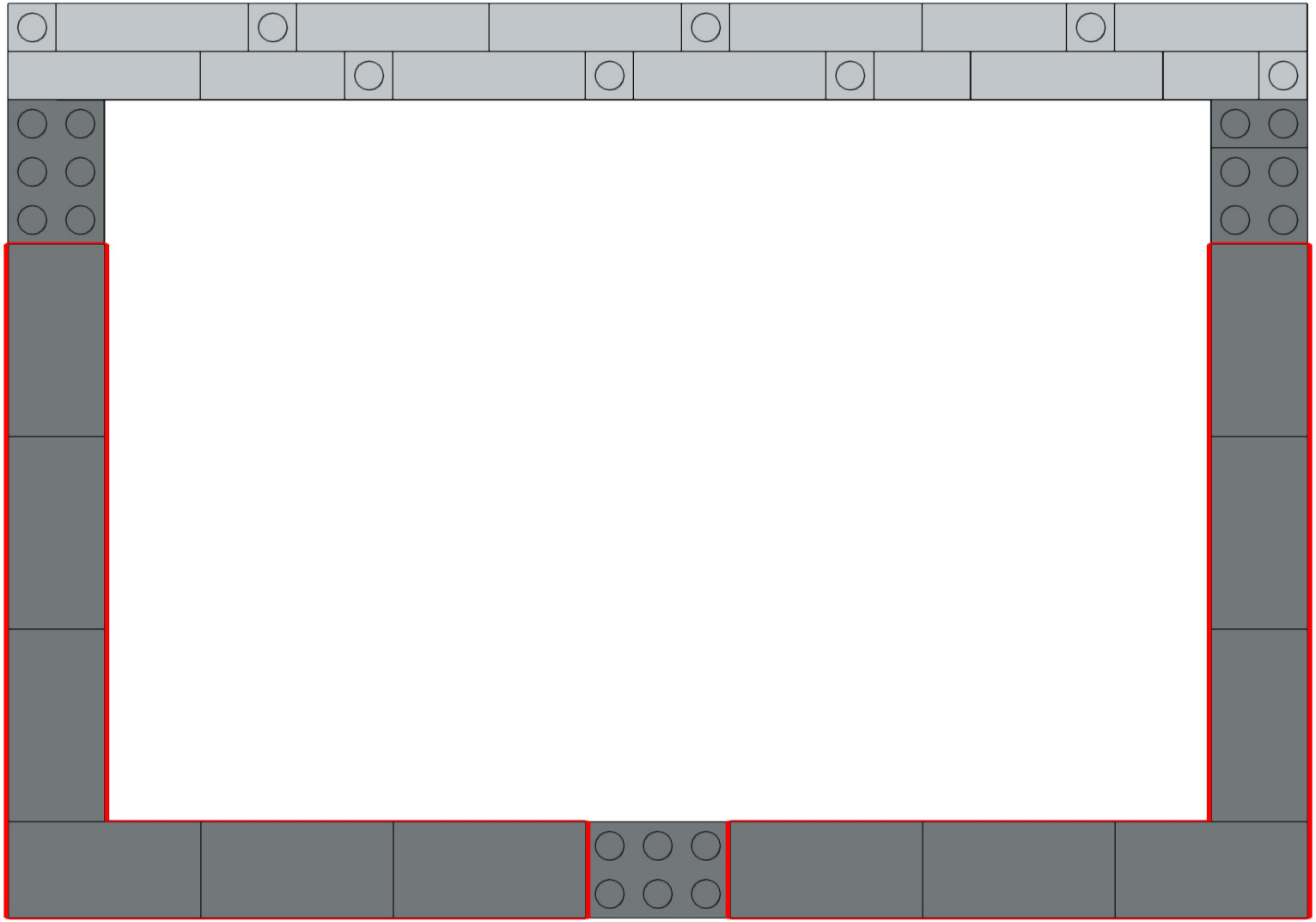

# 55

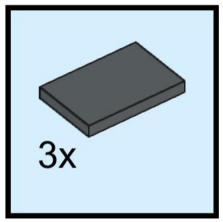


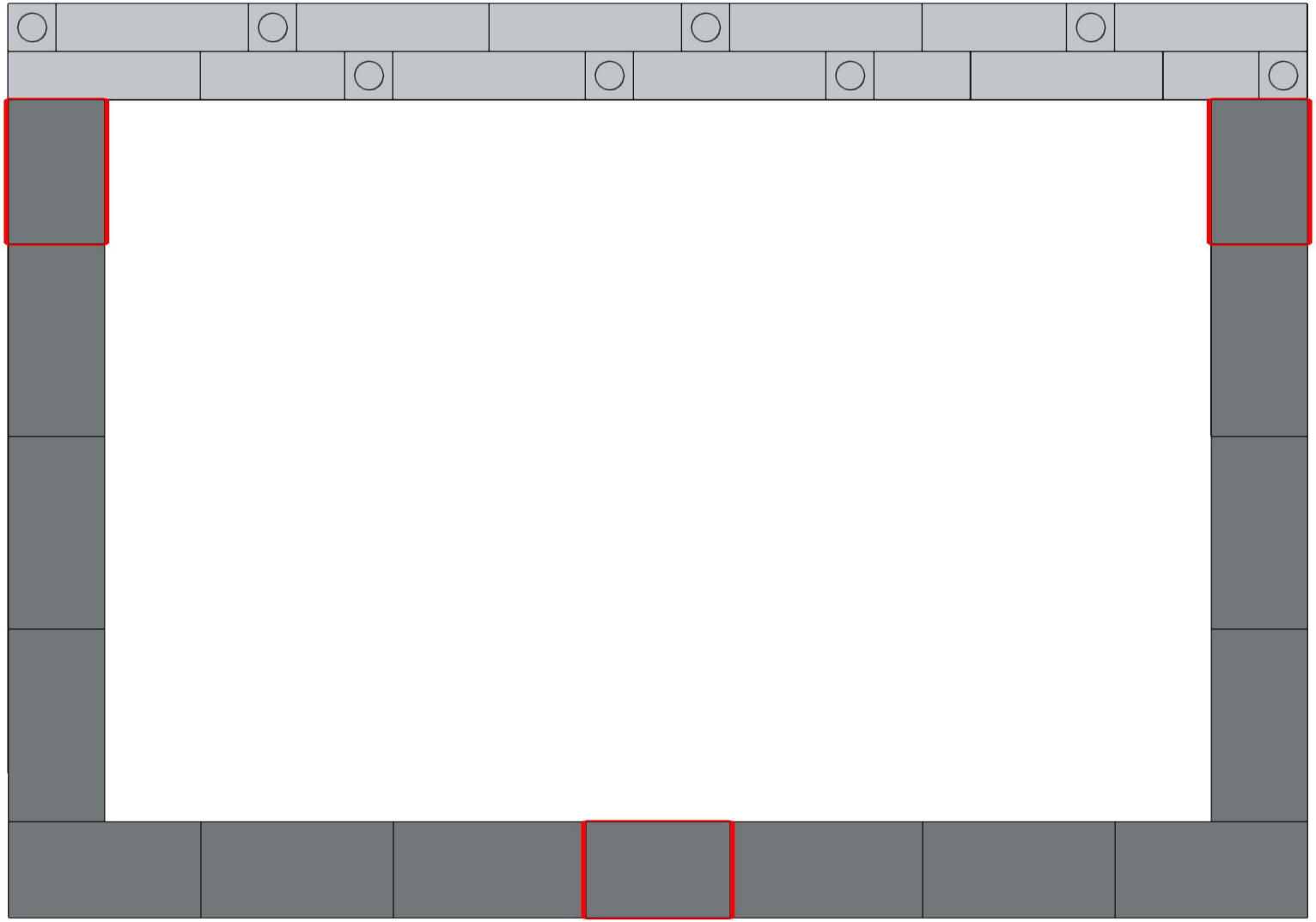

# 56

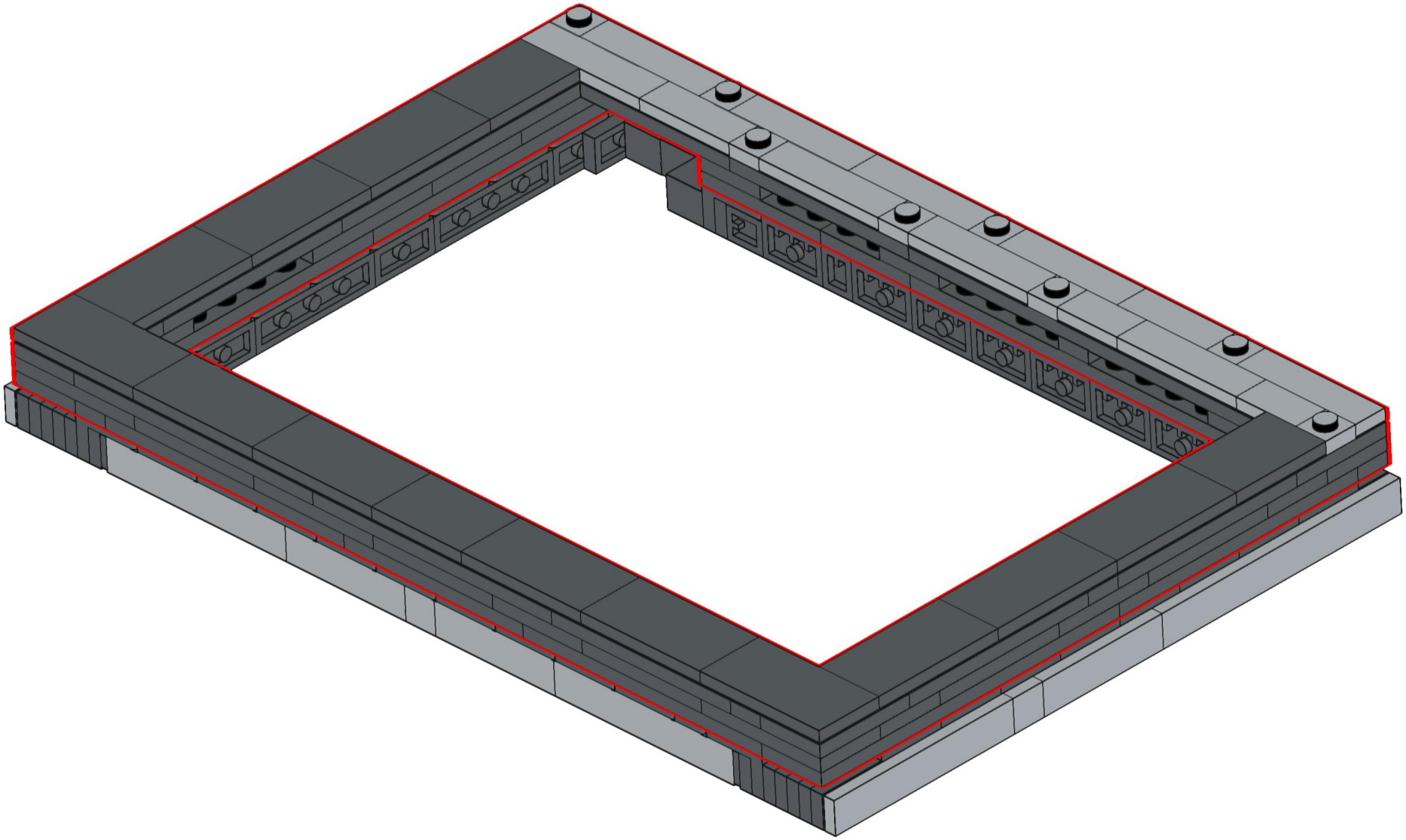

# 57

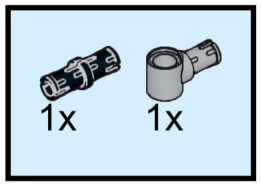


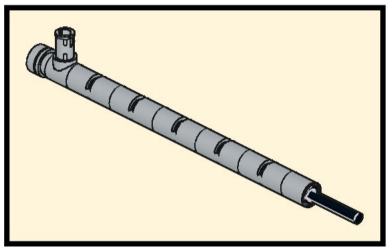

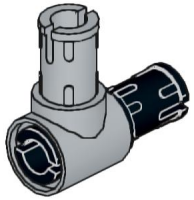

# 58

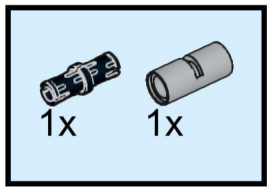


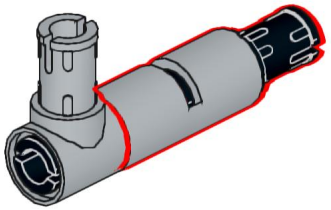

# 59

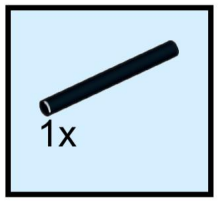


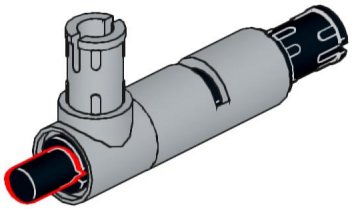

# 60

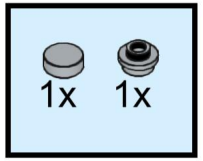


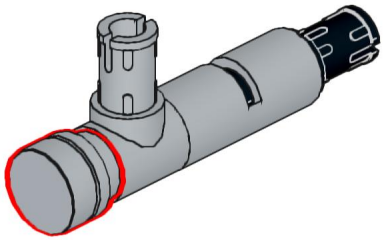

# 61

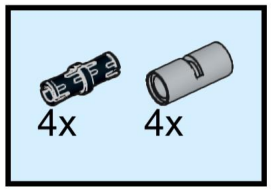


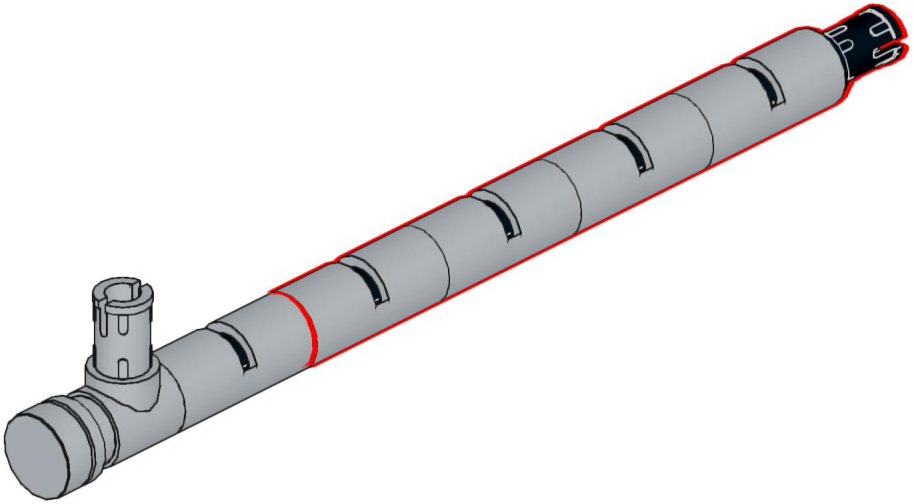

# 62

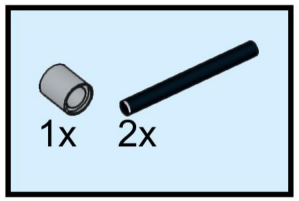


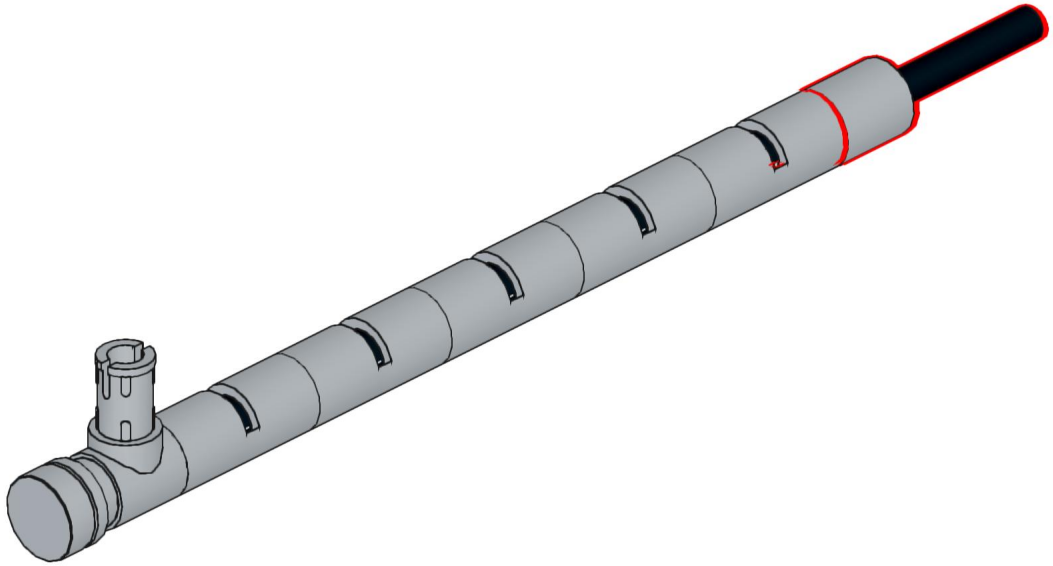

# 63

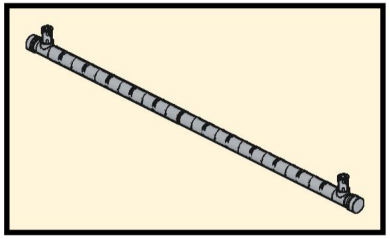

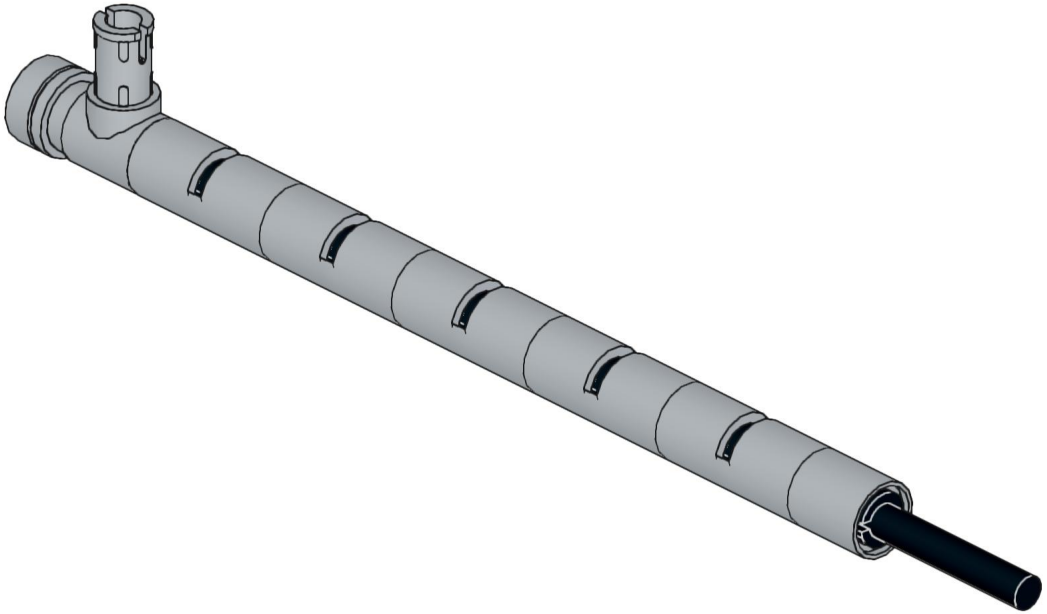

# 64

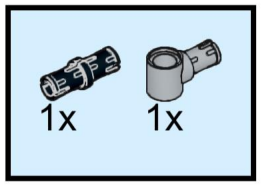


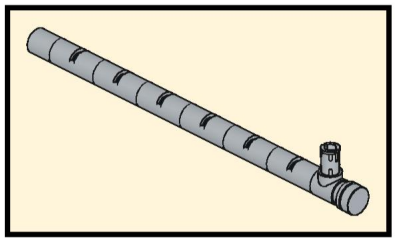

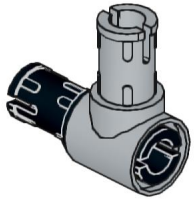

# 65

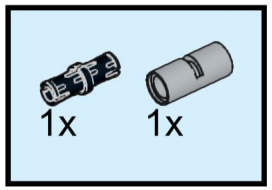


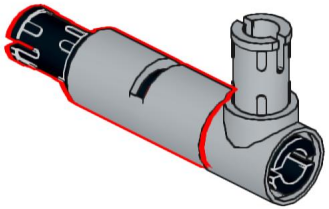

# 66

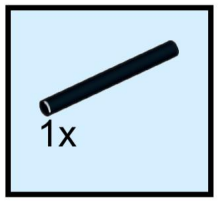


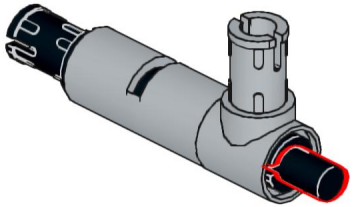

# 67

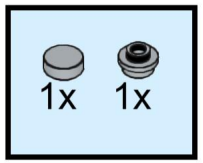


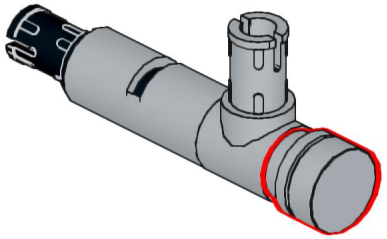

# 68

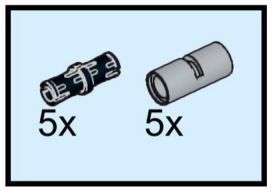


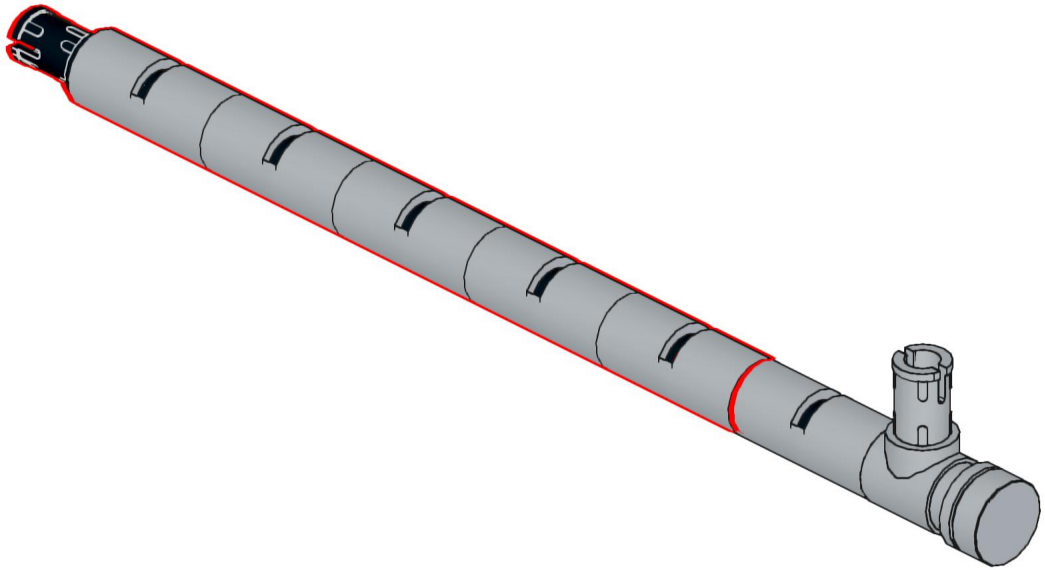

# 69

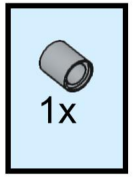


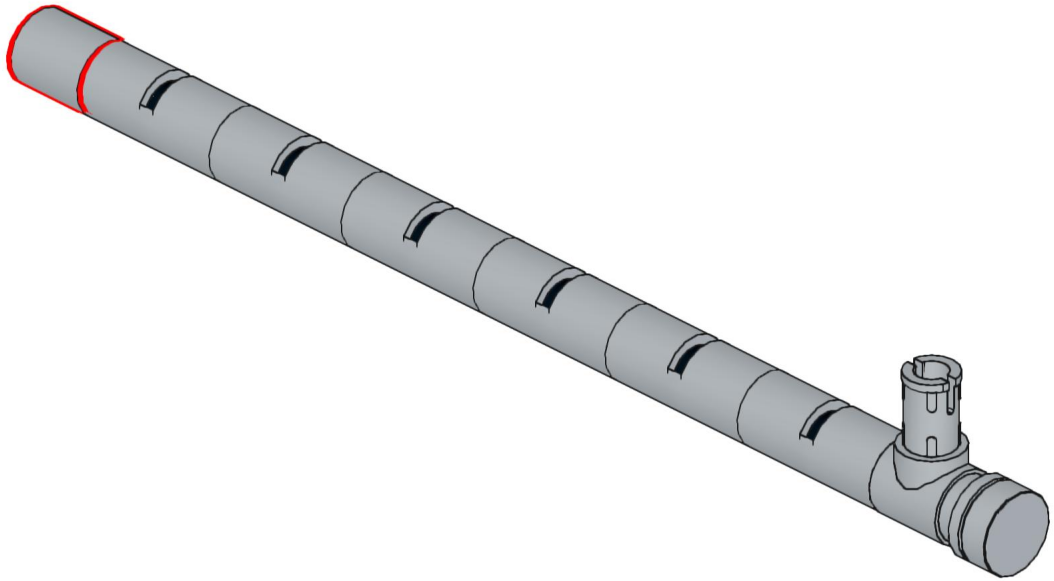

# 70

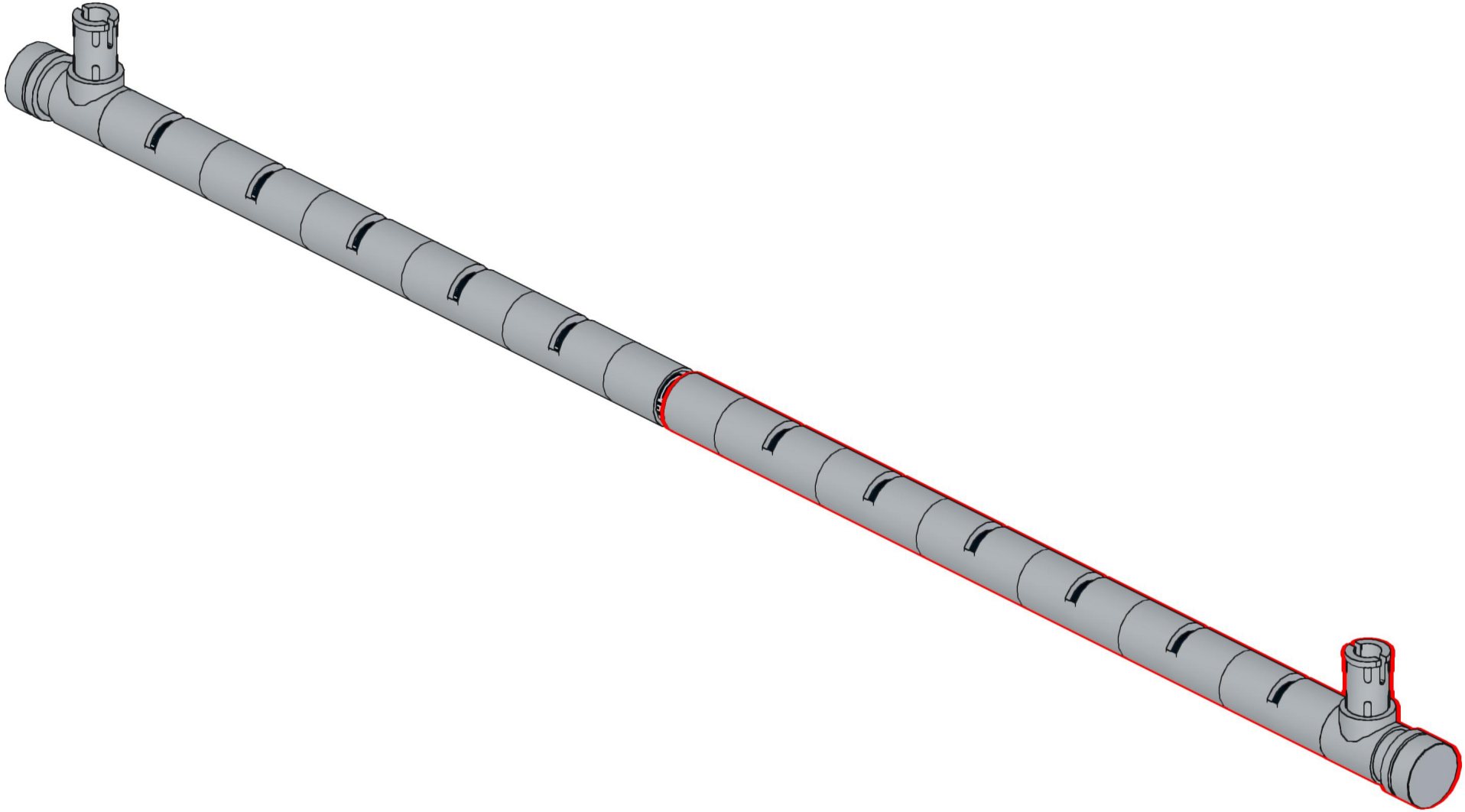

# 71

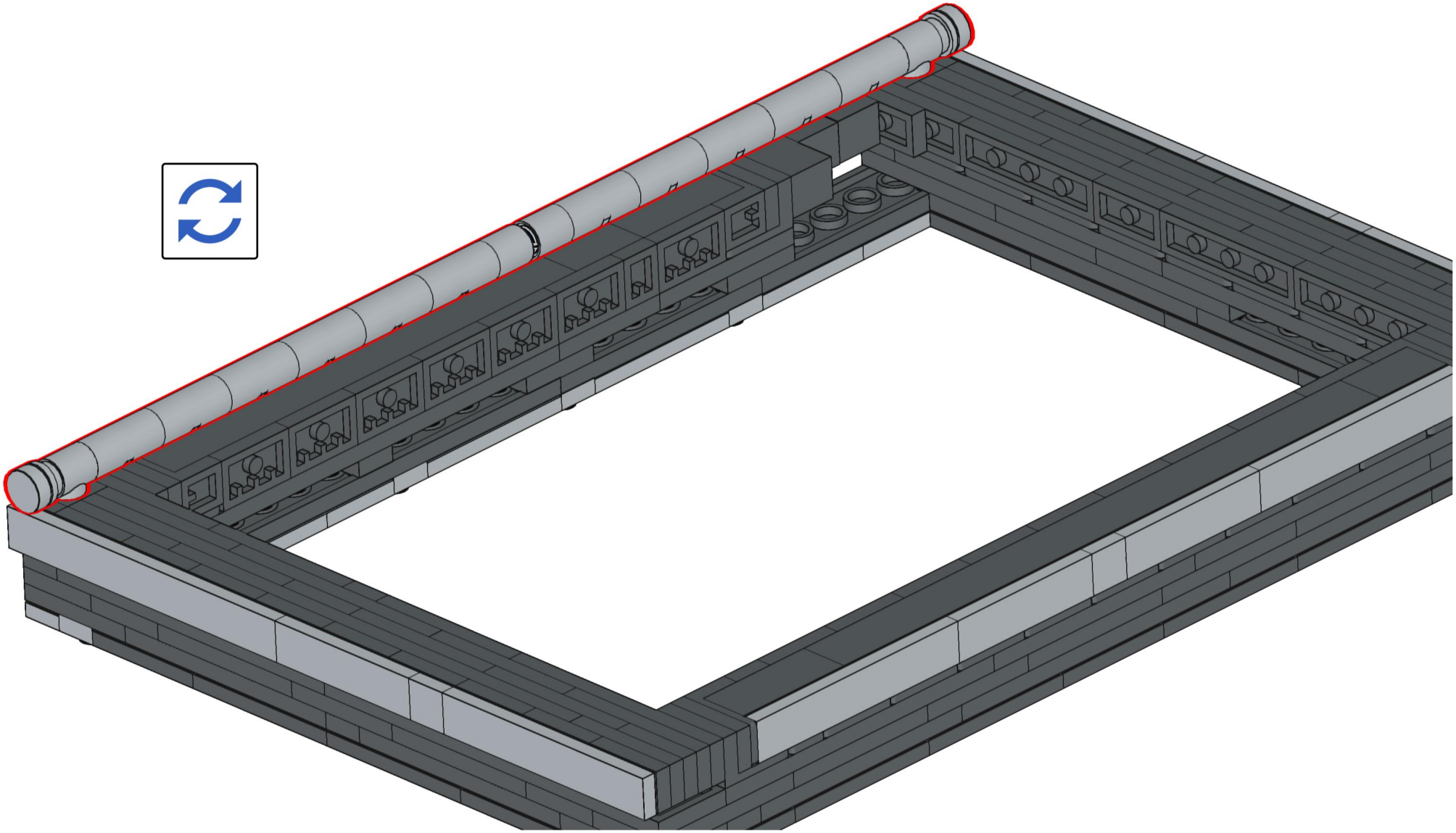

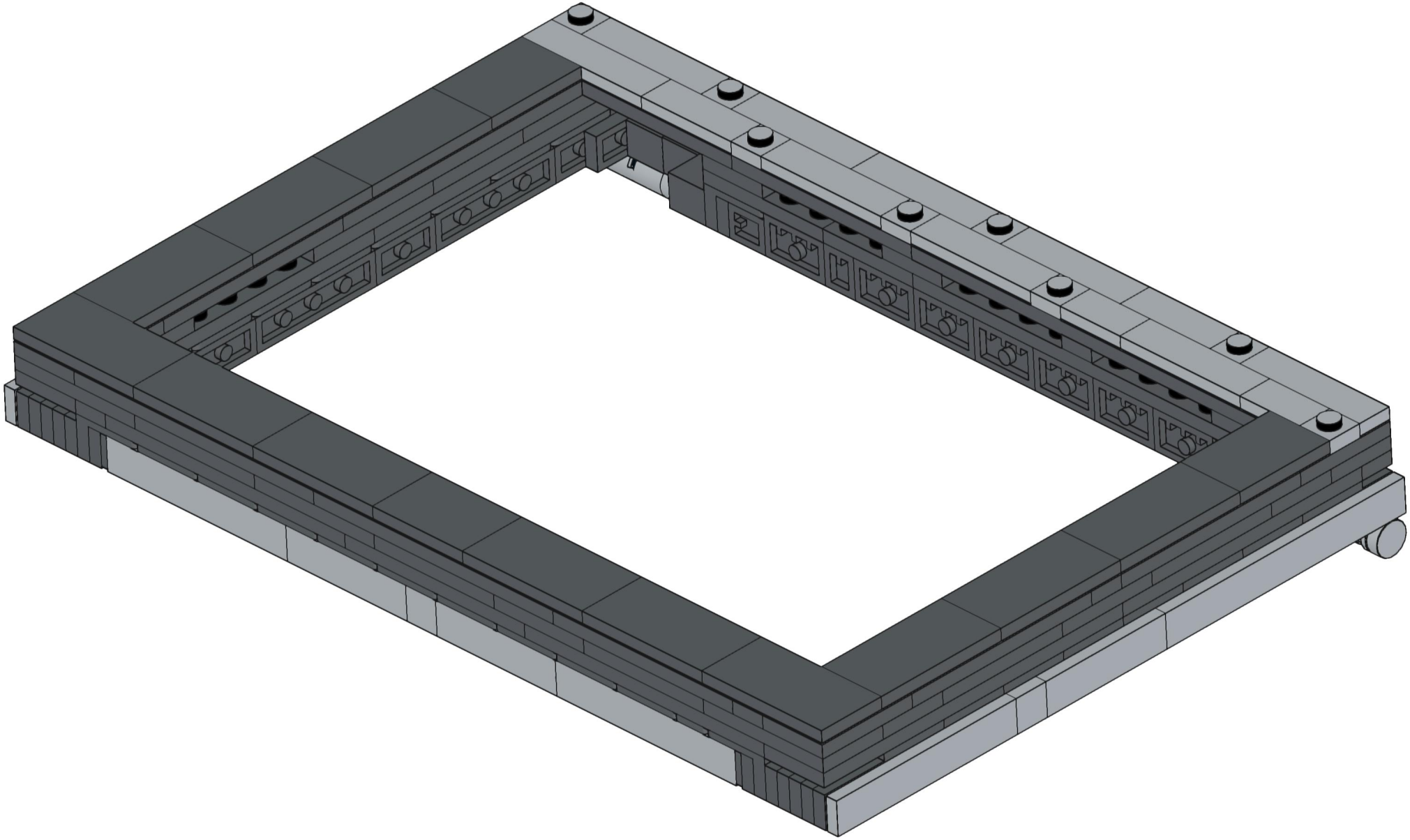

13x
2780
Black

4x
30374
Black

1x
3070b
Dark Bluish Gray

3x
3024
Dark Bluish Gray

2x
3005
Dark Bluish Gray

2x
6541
Dark Bluish Gray

19x
3023
Dark Bluish Gray

6x
73825
Dark Bluish Gray

3x
3004
Dark Bluish Gray

5x
3022
Dark Bluish Gray

16x
99207
Dark Bluish Gray

5x
3623
Dark Bluish Gray

20x
44728
Dark Bluish Gray

2x
3622
Dark Bluish Gray

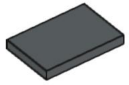
3x
26603
Dark Bluish Gray

7x
3021
Dark Bluish Gray

24x
3710
Dark Bluish Gray

7x
3020
Dark Bluish Gray

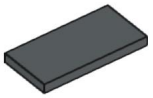
12x
87079
Dark Bluish Gray

6x
3666
Dark Bluish Gray

7x
3795
Dark Bluish Gray

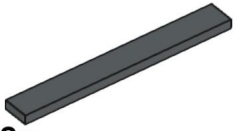
2x
4162
Dark Bluish Gray

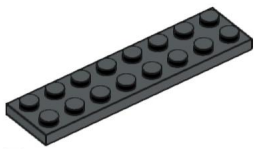
7x
3034
Dark Bluish Gray

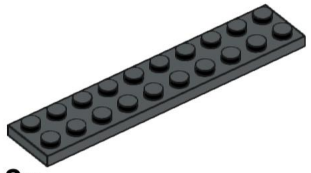
2x
3832
Dark Bluish Gray

2x
60479
Dark Bluish Gray

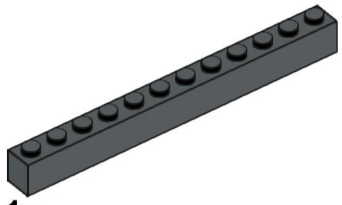
1x
6112
Dark Bluish Gray

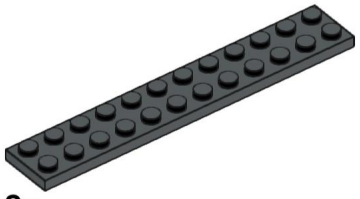
2x
2445
Dark Bluish Gray

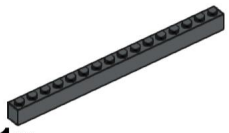
1x
2465
Dark Bluish Gray

3x
3070b
Light Bluish Gray

2x
98138
Light Bluish Gray

8x
3024
Light Bluish Gray

2x
85861
Light Bluish Gray

2x
18654
Light Bluish Gray

2x
3069b
Light Bluish Gray

2x
15100
Light Bluish Gray

11x
62462
Light Bluish Gray

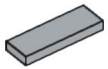
2x
63864
Light Bluish Gray

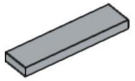
13x
2431
Light Bluish Gray

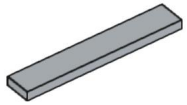
4x
6636
Light Bluish Gray

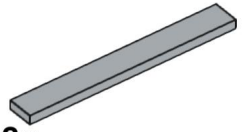
2x
4162
Light Bluish Gray