32-Bit

Microcontroller

TC39x

32-Bit Single-Chip Microcontroller
BC-Step

32-Bit Single-Chip Microcontroller

NDA Required

Downloaded by IFXDMZ|par-zengzhe 12/02/2019 11:04:31

Data Sheet

V 1.0, 2018-11

Microcontrollers

Edition 2018-11

Published by
Infineon Technologies AG
81726 Munich, Germany

© 2018 Infineon Technologies AG
All Rights Reserved.

Legal Disclaimer

The information given in this document shall in no event be regarded as a guarantee of conditions or characteristics. With respect to any examples or hints given herein, any typical values stated herein and/or any information regarding the application of the device, Infineon Technologies hereby disclaims any and all warranties and liabilities of any kind, including without limitation, warranties of non-infringement of intellectual property rights of any third party.

Information

For further information on technology, delivery terms and conditions and prices, please contact the nearest Infineon Technologies Office (**www.infineon.com**)

Warnings

Due to technical requirements, components may contain dangerous substances. For information on the types in question, please contact the nearest Infineon Technologies Office.

Infineon Technologies components may be used in life-support devices or systems only with the express written approval of Infineon Technologies, if a failure of such components can reasonably be expected to cause the failure of that life-support device or system or to affect the safety or effectiveness of that device or system. Life support devices or systems are intended to be implanted in the human body or to support and/or maintain and sustain and/or protect human life. If they fail, it is reasonable to assume that the health of the user or other persons may be endangered.

Downloaded by IFXDMZ|par-zengzhe 12/02/2019 11:04:31

Revision History	
Page or Item	**Subjects (major changes since previous revision)**
V 1.0, 2018-11	
	The history is documented in the last chapter

Downloaded by IFXDMZ\par-zengzhe 12/02/2019 11:04:31

Trademarks of Infineon Technologies AG

AURIX™, C166™, CanPAK™, CIPOS™, CIPURSE™, EconoPACK™, CoolMOS™, CoolSET™, CORECONTROL™, CROSSAVE™, DAVE™, DI-POL™, EasyPIM™, EconoBRIDGE™, EconoDUAL™, EconoPIM™, EconoPACK™, EiceDRIVER™, eupec™, FCOS™, HITFET™, HybridPACK™, I²RF™, ISOFACE™, IsoPACK™, MIPAQ™, ModSTACK™, my-d™, NovalithIC™, OptiMOS™, ORIGA™, POWERCODE™; PRIMARION™, PrimePACK™, PrimeSTACK™, PRO-SIL™, PROFET™, RASIC™, ReverSave™, SatRIC™, SIEGET™, SINDRION™, SIPMOS™, SmartLEWIS™, SOLID FLASH™, TEMPFET™, thinQ!™, TRENCHSTOP™, TriCore™.

Other Trademarks

Advance Design System™ (ADS) of Agilent Technologies, AMBA™, ARM™, MULTI-ICE™, KEIL™, PRIMECELL™, REALVIEW™, THUMB™, µVision™ of ARM Limited, UK. AUTOSAR™ is licensed by AUTOSAR development partnership. Bluetooth™ of Bluetooth SIG Inc. CAT-iq™ of DECT Forum. COLOSSUS™, FirstGPS™ of Trimble Navigation Ltd. EMV™ of EMVCo, LLC (Visa Holdings Inc.). EPCOS™ of Epcos AG. FLEXGO™ of Microsoft Corporation. FlexRay™ is licensed by FlexRay Consortium. HYPERTERMINAL™ of Hilgraeve Incorporated. IEC™ of Commission Electrotechnique Internationale. IrDA™ of Infrared Data Association Corporation. ISO™ of INTERNATIONAL ORGANIZATION FOR STANDARDIZATION. MATLAB™ of MathWorks, Inc. MAXIM™ of Maxim Integrated Products, Inc. MICROTEC™, NUCLEUS™ of Mentor Graphics Corporation. MIPI™ of MIPI Alliance, Inc. MIPS™ of MIPS Technologies, Inc., USA. muRata™ of MURATA MANUFACTURING CO., MICROWAVE OFFICE™ (MWO) of Applied Wave Research Inc., OmniVision™ of OmniVision Technologies, Inc. Openwave™ Openwave Systems Inc. RED HAT™ Red Hat, Inc. RFMD™ RF Micro Devices, Inc. SIRIUS™ of Sirius Satellite Radio Inc. SOLARIS™ of Sun Microsystems, Inc. SPANSION™ of Spansion LLC Ltd. Symbian™ of Symbian Software Limited. TAIYO YUDEN™ of Taiyo Yuden Co. TEAKLITE™ of CEVA, Inc. TEKTRONIX™ of Tektronix Inc. TOKO™ of TOKO KABUSHIKI KAISHA TA. UNIX™ of X/Open Company Limited. VERILOG™, PALLADIUM™ of Cadence Design Systems, Inc. VLYNQ™ of Texas Instruments Incorporated. VXWORKS™, WIND RIVER™ of WIND RIVER SYSTEMS, INC. ZETEX™ of Diodes Zetex Limited.

Last Trademarks Update 2011-11-11

Downloaded by IFXDMZlpar-zengzhe 12/02/2019 11:04:31

Table of Contents

1 Summary of Features . . . 1

2 Pin Definition and Functions: . . . 6
2.1 LFBGA-516 Package Variant Pin Configuration . . . 9
2.2 LFBGA-292 Package Variant Pin Configuration . . . 166
2.3 LFBGA-292 ADAS Package Variant Pin Configuration . . . 270
2.4 Pin Position Definition . . . 368
2.5 Legend . . . 395

3 Electrical Specification . . . 397
3.1 Parameter Interpretation . . . 397
3.2 Absolute Maximum Ratings . . . 398
3.3 Pin Reliability in Overload . . . 399
3.4 Operating Conditions . . . 402
3.5 5 V / 3.3 V switchable Pads . . . 405
3.6 High performance LVDS Pads . . . 425
3.7 VADC Parameters . . . 427
3.8 DSADC Parameters . . . 431
3.9 MHz Oscillator . . . 434
3.10 Back-up Clock . . . 436
3.11 Temperature Sensor . . . 437
3.12 Power Supply Current . . . 438
3.12.1 Calculating the 1.25 V Current Consumption . . . 444
3.13 Power Supply Infrastructure and Supply Start-up . . . 445
3.13.1 Supply Ramp-up and Ramp-down Behavior . . . 446
3.13.1.1 Single Supply mode (a) . . . 446
3.13.1.2 Single Supply mode (e) . . . 448
3.13.1.3 External Supply mode (d) . . . 450
3.13.1.4 External Supply mode (h) . . . 452
3.14 Reset Timing . . . 454
3.15 EVR . . . 457
3.16 System Phase Locked Loop (SYS_PLL) . . . 465
3.17 Peripheral Phase Locked Loop (PER_PLL) . . . 466
3.18 AC Specifications . . . 467
3.19 JTAG Parameters . . . 468
3.20 DAP Parameters . . . 470
3.21 ASCLIN SPI Master Timing . . . 472
3.22 QSPI Timings, Master and Slave Mode . . . 474
3.23 MSC Timing 5 V Operation . . . 478
3.24 Ethernet Interface (ETH) Characteristics . . . 480
3.24.1 ETH Measurement Reference Points . . . 480
3.24.2 ETH Management Signal Parameters (ETH_MDC, ETH_MDIO) . . . 481
3.24.3 ETH MII Parameters . . . 482
3.24.4 ETH RMII Parameters . . . 483
3.24.5 ETH RGMII Parameters . . . 484
3.25 E-Ray Parameters . . . 485
3.26 HSCT Parameters . . . 487
3.27 Inter-IC (I2C) Interface Timing . . . 489
3.28 SDMMC Interface Timing . . . 493
3.29 FSP Parameter . . . 494

Downloaded by IFXDMZlpar-zengzhe 12/02/2019 11:04:31

3.30 Radar Interface Timing 495
3.31 EBU Timings 496
3.31.1 BFCLKO Output Clock Timing 496
3.31.2 EBU Asynchronous Timings 496
3.31.3 EBU Burst Mode Access Timing 500
3.31.4 EBU Arbitration Signal Timing 502
3.32 Flash Target Parameters 503
3.33 Quality Declarations 508
3.34 Package Outline 510
3.34.1 Package Parameters 511

4 History 512
4.1 Changes from Version 0.4 to Version 0.6 512
4.2 Changes from Version 0.6 to Version 0.7 522
4.3 Changes from Version 0.7 to Version 1.0 528

Downloaded by IFXDMZ|par-zengzhe 12/02/2019 11:04:31

1 Summary of Features

The TC39x product family has the following features:

- High Performance Microcontroller with six CPU cores
- Six 32-bit super-scalar TriCore CPUs (TC1.6.2P), each having the following features:
  - Superior real-time performance
  - Strong bit handling
  - Fully integrated DSP capabilities
  - Multiply-accumulate unit able to sustain 2 MAC operations per cycle
  - Fully pipelined Floating point unit (FPU)
  - up to 300 MHz operation at full temperature range
  - up to 240/96 Kbyte Data Scratch-Pad RAM (DSPR)
  - up to 64 Kbyte Instruction Scratch-Pad RAM (PSPR)
  - up to 64 Kbyte Data RAM (DLMU)
  - 32 Kbyte Instruction Cache (ICACHE)
  - 16 Kbyte Data Cache (DCACHE)
- Lockstepped shadow cores for four TC1.6.2P
- Multiple on-chip memories
  - All embedded NVM and SRAM are ECC protected
  - up to 16 Mbyte Program Flash Memory (PFLASH)
  - up to 1 Mbyte Data Flash Memory (DFLASH) usable for EEPROM emulation
  - 768 Kbyte Memory (LMU)
  - BootROM (BROM)
- 128-Channel DMA Controller with safe data transfer
- Sophisticated interrupt system (ECC protected)
- High performance on-chip bus structure
  - 64-bit Cross Bar Interconnect (SRI) giving fast parallel access between bus masters, CPUs and memories
  - 32-bit System Peripheral Bus (SPB) for on-chip peripheral and functional units
  - SRI to SPB bus bridges (SFI Bridge)
- Optional Hardware Security Module (HSM) on some variants
- Safety Management Unit (SMU) handling safety monitor alarms
- Memory Test Unit with ECC, Memory Initialization and MBIST functions (MTU)
- Hardware I/O Monitor (IOM) for checking of digital I/O
- Versatile On-chip Peripheral Units
  - 8 Asynchronous/Synchronous Serial Channels (ASCLIN) with hardware LIN support (V1.3, V2.0, V2.1 and J2602) up to 50 MBaud
  - 6 Queued SPI Interface Channels (QSPI) with master and slave capability up to 50 Mbit/s
  - 2 High Speed Serial Link (HSSL) for serial inter-processor communication up to 320 Mbit/s
  - 4 serial Micro Second Bus interfaces (MSC) for serial port expansion to external power devices
  - 3 MCMCAN Modules with 4 CAN nodes for high efficiency data handling via FIFO buffering
  - 25 Single Edge Nibble Transmission (SENT) channels for connection to sensors
  - 2 FlexRay™ module with 2 channels (E-Ray) supporting V2.1

Downloaded by IFXDMZ|par-zengzhe 12/02/2019 11:04:31

  - One Generic Timer Module (GTM) providing a powerful set of digital signal filtering and timer functionality to realize autonomous and complex Input/Output management
  - One Capture / Compare 6 module (Two kernels CCU60 and CCU61)
  - One General Purpose 12 Timer Unit (GPT120)
  - 4 channel Peripheral Sensor Interface conforming to V1.3 (PSI5)
  - 1 Peripheral Sensor Interface with Serial PHY (PSI5-S)
  - 2 Inter-Integrated Circuit Bus Interface (I2C) conforming to V2.1
  - 1 IEEE802.3 Ethernet MAC with RMII and MII interfaces (ETH)
  - 1 external Bus interface (EBU)
- Versatile Successive Approximation ADC (VADC)
  - Cluster of 20 independent ADC kernels
  - Input voltage range from 0 V to 5.5V (ADC supply)
- Delta-Sigma ADC (DSADC)
  - 14 channels
- Digital programmable I/O ports
- On-chip debug support for OCDS Level 1 (CPUs, DMA, On Chip Buses)
- multi-core debugging, real time tracing, and calibration
- four/five wire JTAG (IEEE 1149.1) or DAP (Device Access Port) interface
- Power Management System and on-chip regulators
- Clock Generation Unit with System PLL and Peripheral PLL
- Embedded Voltage Regulator

Downloaded by IFXDMZ|par-zengzhe 12/02/2019 11:04:31

Ordering Information

The ordering code for Infineon microcontrollers provides an exact reference to the required product. This ordering code identifies:

- The derivative itself, i.e. its function set, the temperature range, and the supply voltage
- The package and the type of delivery.

Table 1-1 Platform Feature Overview

Feature		TC39x
CPUs	Type	TC1.6.2
	Cores / Checker Cores	6 / 4
	Max. Freq.	300 MHz
Cache per CPU	Program	32 KB
	Data	16 KB
SRAM per CPU	PSPR	64 KB
	DSPR	240 KB for CPU0,1/ 96 KB else
	DLMU	64 KB
SRAM global	LMU	768 KB
	DAM	128 KB
Extension Memory	TCM	2 MB
	XCM	2 MB
	XTM	16 KB
Program Flash	Size	16 MB
	Banks	5 x 3 MB, 1 x 1 MB
Data Flash	Size (single-ended)	1 MB
DMA	Channels	128
CONVCTRL	Modules	1
EVADC	Primary Groups/Channels	8 / 64
	Secondary Groups/Channels	4 / 64
	Fast Compare Channels	8
EDSADC	Channels	14

Downloaded by IFXDMZlpar-zengzhe 12/02/2019 11:04:31

Table 1-1 Platform Feature Overview (cont'd)

Feature		TC39x
GTM	Clusters	12 (5 @ 200MHz, 7 @ 100MHz)
	TIM (8 ch)	8
	TOM (16 ch)	6
	ATOM (8 ch)	12
	MCS (8 ch)	10
	CMU / ICM	1 / 1
	PSM	3
	TBU channels[1)]	4 (TBU0-3)
	SPE	6
	CMP / MON	1 / 1
	BRC / DPLL	1 / 1
	CDTM modules	6
	DTM modules	24 (10 on TOM, 14 on ATOM)
Timer	GPT12	1
	CCU6	1
STM	Modules	6
FlexRay	Modules	2
	Channels	2
CAN	Modules	3
	Nodes	3 x 4
	of which support TT-CAN	1
QSPI	Modules	6
	HSCI Channels	2
ASCLIN	Modules	12
I2C	Interfaces	2
SENT	Channels	25
PSI5	Modules	4
PSI5-S	Modules	1
HSSL	Channels	2
MSC	Channels	4
EBU	External Bus	1
SDMMC	eMMC/SD Interface	1
Ethernet (10/100Mbit/1Gbit)	Modules	1
FCE	Modules	1
Safety Support	SMU	yes
	IOM	yes
SPU	Modules	2

Downloaded by IFXDMZ|par-zengzhe 12/02/2019 11:04:31

Table 1-1 Platform Feature Overview (cont'd)

Feature		TC39x
RIF	Modules	2
HSDPM	Modules	1
Security	HSM+	1
Debug	OCDS	yes
	MCDS	yes
	miniMCDS	no
	miniMCDS TRAM	- KB
	AGBT	yes
Low Power Features	Standby RAM	2
	SCR	yes
Packages	Type	PG-LFBGA-516-10 / LF-BGA-292-10
I/O	Type	5 V CMOS / 3.3 V CMOS / LVDS
$T_{ambient}$	Range	−40 … +150°C

1) TBU3 has special purpose as angle clock.

Downloaded by IFXDMZ|par-zengzhe 12/02/2019 11:04:31

2 Pin Definition and Functions:

The following figures are showing the TC39x Logic Symbols for the package variants:

- LFBGA-516 (**Figure 2-1**)
- LFBGA-292 (**Figure 2-2**)
- LFBGA-292 ADAS feature set (**Figure 2-3**)

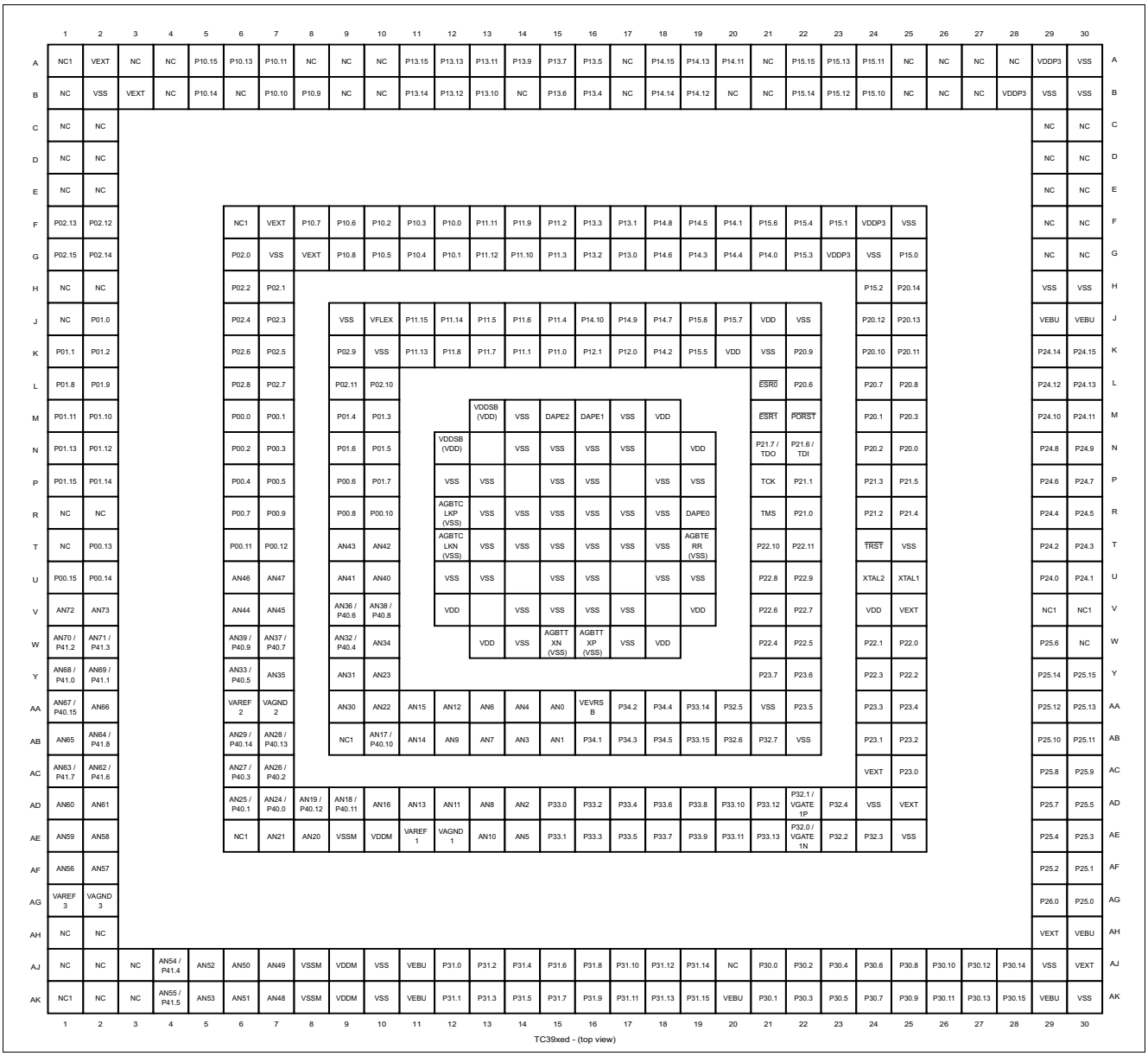

Figure 2-1 Logic Symbol for the package variant LFBGA-516

Downloaded by IFXDMZ|par-zengzhe 12/02/2019 11:04:31

	1	2	3	4	5	6	7	8	9	10	11	12	13	14	15	16	17	18	19	20	
A	NC1	VEXT	P10.7	P10.6	P10.2	P10.3	P10.0	P11.11	P11.9	P11.2	P13.3	P13.1	P14.8	P14.5	P14.1	P15.6	P15.4	P15.1	VDDP3	VSS	A
B	P02.0	VSS	VEXT	P10.8	P10.5	P10.4	P10.1	P11.12	P11.10	P11.3	P13.2	P13.0	P14.6	P14.3	P14.4	P14.0	P15.3	VDDP3	VSS	P15.0	B
C	P02.2	P02.1																	P15.2	P20.14	C
D	P02.4	P02.3		VSS	VFLEX	P11.15	P11.14	P11.5	P11.6	P11.4	P14.10	P14.9	P14.7	P15.8	P15.7	VDD	VSS		P20.12	P20.13	D
E	P02.6	P02.5		P02.9	VSS	P11.13	P11.8	P11.7	P11.1	P11.0	P12.1	P12.0	P14.2	P15.5	VDD	VSS	P20.9		P20.10	P20.11	E
F	P02.8	P02.7		P02.11	P02.10											$\overline{\text{ESR0}}$	P20.6		P20.7	P20.8	F
G	P00.0	P00.1		P01.4	P01.3			VDDSB (VDD)	VSS	DAPE2	DAPE1	VSS	VDD			$\overline{\text{ESR1}}$	$\overline{\text{PORST}}$		P20.1	P20.3	G
H	P00.2	P00.3		P01.6	P01.5		VDDSB (VDD)		VSS	VSS	VSS	VSS		VDD		P21.7 / TDO	P21.6 / TDI		P20.2	P20.0	H
J	P00.4	P00.5		P00.6	P01.7		VSS	VSS		VSS	VSS		VSS	VSS		TCK	P21.1		P21.3	P21.5	J
K	P00.7	P00.9		P00.8	P00.10		AGBTC LKP (VSS)	VSS	VSS	VSS	VSS	VSS	VSS	DAPE0		TMS	P21.0		P21.2	P21.4	K
L	P00.11	P00.12		AN43	AN42		AGBTC LKN (VSS)	VSS	VSS	VSS	VSS	VSS	VSS	AGBTE RR (VSS)		P22.10	P22.11		$\overline{\text{TRST}}$	VSS	L
M	AN46	AN47		AN41	AN40		VSS	VSS		VSS	VSS		VSS	VSS		P22.8	P22.9		XTAL2	XTAL1	M
N	AN44	AN45		AN36 / P40.6	AN38 / P40.8		VDD		VSS	VSS	VSS	VSS		VDD		P22.6	P22.7		VDD	VEXT	N
P	AN39 / P40.9	AN37 / P40.7		AN32 / P40.4	AN34			VDD	VSS	AGBTT XN (VSS)	AGBTT XP (VSS)	VSS	VDD			P22.4	P22.5		P22.1	P22.0	P
R	AN33 / P40.5	AN35		AN31	AN23											P23.7	P23.6		P22.3	P22.2	R
T	VAREF 2	VAGND 2		AN30	AN22	AN15	AN12	AN6	AN4	AN0	VEVRS B	P34.2	P34.4	P33.14	P32.5	VSS	P23.5		P23.3	P23.4	T
U	AN29 / P40.14	AN28 / P40.13		NC1	AN17 / P40.10	AN14	AN9	AN7	AN3	AN1	P34.1	P34.3	P34.5	P33.15	P32.6	P32.7	VSS		P23.1	P23.2	U
V	AN27 / P40.3	AN26 / P40.2																	VEXT	P23.0	V
W	AN25 / P40.1	AN24 / P40.0	AN19 / P40.12	AN18 / P40.11	AN16	AN13	AN11	AN8	AN2	P33.0	P33.2	P33.4	P33.6	P33.8	P33.10	P33.12	P32.1 / VGATE 1P	P32.4	VSS	VEXT	W
Y	NC1	AN21	AN20	VSSM	VDDM	VAREF 1	VAGND 1	AN10	AN5	P33.1	P33.3	P33.5	P33.7	P33.9	P33.11	P33.13	P32.0 / VGATE 1N	P32.2	P32.3	VSS	Y
	1	2	3	4	5	6	7	8	9	10	11	12	13	14	15	16	17	18	19	20	

TC39xed - (top view)

Figure 2-2 Logic Symbol for the package variant LFBGA-292

Downloaded by IFXDMZ|par-zengzhe 12/02/2019 11:04:31

	1	2	3	4	5	6	7	8	9	10	11	12	13	14	15	16	17	18	19	20	
A	NC1	VEXT	NC	P51_11	P51_9	P51_7	P51_5	P51_3	P51_1	P11.11	P11.9	P11.2	P14.8	P14.5	P14.1	P15.6	P15.4	P15.1	VDDP3	VSS	A
B	NC	VSS	VEXT	P51_10	P51_8	P51_6	P51_4	P51_2	P51_0	P11.12	P11.10	P11.3	P14.6	P14.3	P14.4	P14.0	P15.3	VDDP3	VSS	P15.0	B
C	P50_1	P50_0																	P15.2	P20.14	C
D	P50_3	P50_2		VSS	VFLEX	P11.15	P11.14	P11.5	P11.6	P11.4	P14.10	P14.9	P14.7	P15.8	P15.7	VDD	VSS		P20.12	P20.13	D
E	P50_5	P50_4		P10.0	VSS	P11.13	P11.8	P11.7	P11.1	P11.0	P12.1	P12.0	P14.2	P15.5	VDD	VSS	P20.9		P20.10	P20.11	E
F	P50_7	P50_6		P10.1	P10.2											$\overline{\text{ESR0}}$	P20.6		P20.7	P20.8	F
G	P50_9	P50_8		P10.3	P10.4			VDD	VSS	DAPE2	DAPE1	VSS	VDD			$\overline{\text{ESR1}}$	$\overline{\text{PORST}}$		P20.1	P20.3	G
H	P50_11	P50_10		P10.5	P10.6		VDD		VSS	VSS	VSS	VSS		VDD		P21.7 / TDO	P21.6 / TDI		P20.2	P20.0	H
J	P02.0	P02.1		P10.8	P10.7		VSS	VSS		VSS	VSS		VSS	VSS		TCK	P21.1		P21.3	P21.5	J
K	P02.2	P02.3		P02.4	P02.5		AGBTC LKP (VSS)	VSS	VSS	VSS	VSS	VSS	VSS	DAPE0		TMS	P21.0		P21.2	P21.4	K
L	P02.6	P00.0		P02.7	P02.8		AGBTC LKN (VSS)	VSS	VSS	VSS	VSS	VSS	VSS	AGBTE RR (VSS)		P22.10	P22.11		$\overline{\text{TRST}}$	VSS	L
M	P00.2	P00.1		P00.3	P00.4		VSS	VSS		VSS	VSS		VSS	VSS		P22.8	P22.9		XTAL2	XTAL1	M
N	P00.8	P00.7		P00.6	P00.5		VDD		VSS	VSS	VSS	VSS		VDD		P22.6	P22.7		VDD	VEXT	N
P	P00.10	P00.9		AN47	AN45			VDD	VSS	AGBTT XN (VSS)	AGBTT XP (VSS)	VSS	VDD			P22.4	P22.5		P22.1	P22.0	P
R	P00.11	P00.12		AN25 / P40.1	AN23											P23.7	P23.6		P22.3	P22.2	R
T	VAREF2	VAGND2		AN24 / P40.0	AN22	AN15	AN12	AN6	AN4	AN0	VEVRSB	P34.2	P34.4	P33.14	P32.5	VSS	P23.5		P23.3	P23.4	T
U	AN44	AN46		NC1	AN17 / P40.10	AN14	AN9	AN7	AN3	AN1	P34.1	P34.3	P34.5	P33.15	P32.6	P32.7	VSS		P23.1	P23.2	U
V	AN39 / P40.9	AN37 / P40.7																	VEXT	P23.0	V
W	AN36 / P40.6	AN38 / P40.8	AN19 / P40.12	AN18 / P40.11	AN16	AN13	AN11	AN8	AN2	P33.0	P33.2	P33.4	P33.6	P33.8	P33.10	P33.12	P32.1 / VGATE1P	P32.4	VSS	VEXT	W
Y	NC1	AN21	AN20	VSSM	VDDM	VAREF1	VAGND1	AN10	AN5	P33.1	P33.3	P33.5	P33.7	P33.9	P33.11	P33.13	P32.0 / VGATE1N	P32.2	P32.3	VSS	Y
	1	2	3	4	5	6	7	8	9	10	11	12	13	14	15	16	17	18	19	20	

TC39xed_adas - (top view)

Figure 2-3 Logic Symbol for the package variant LFBGA-292 ADAS

Downloaded by IFXDMZ|par-zengzhe 12/02/2019 11:04:31

2.1 LFBGA-516 Package Variant Pin Configuration

Table 2-1 Port 00 Functions

Ball	Symbol	Ctrl.	Buffer Type	Function
M6	P00.0	I	FAST / PU1 / VEXT / ES	**General-purpose input**
	GTM_TIM5_IN4_10			**Mux input channel 4 of TIM module 5**
	GTM_TIM3_IN0_1			**Mux input channel 0 of TIM module 3**
	GTM_TIM2_IN0_1			**Mux input channel 0 of TIM module 2**
	CCU61_CTRAPA			**Trap input capture**
	CCU60_T12HRE			**External timer start 12**
	MSC0_INJ0			**Injection signal from port**
	GETH_MDIOA			**MDIO Input**
	P00.0	O0		**General-purpose output**
	GTM_TOUT9	O1		**GTM muxed output**
	IOM_REF0_9			**Reference input 0**
	ASCLIN3_ASCLK	O2		**Shift clock output**
	ASCLIN3_ATX	O3		**Transmit output**
	IOM_MON2_15			**Monitor input 2**
	IOM_REF2_15			**Reference input 2**
	—	O4		**Reserved**
	CAN10_TXD	O5		**CAN transmit output node 0**
	—	O6		**Reserved**
	CCU60_COUT63	O7		**T13 PWM channel 63**
	IOM_MON1_6			**Monitor input 1**
	IOM_REF1_0			**Reference input 1**
	GETH_MDIO	O		**MDIO Output**

Downloaded by IFXDMZ|par-zengzhe 12/02/2019 11:04:31

Table 2-1 Port 00 Functions (cont'd)

Ball	Symbol	Ctrl.	Buffer Type	Function
M7	P00.1	I	SLOW / PU1 / VEXT / ES	**General-purpose input**
	GTM_TIM5_IN5_11			**Mux input channel 5 of TIM module 5**
	GTM_TIM3_IN1_1			**Mux input channel 1 of TIM module 3**
	GTM_TIM2_IN1_1			**Mux input channel 1 of TIM module 2**
	CCU60_CC60INB			**T12 capture input 60**
	ASCLIN3_ARXE			**Receive input**
	EDSADC_DSCIN5A			**Modulator clock input**
	CAN10_RXDA			**CAN receive input node 0**
	PSI5_RX0A			**RXD inputs (receive data) channel 0**
	CCU61_CC60INA			**T12 capture input 60**
	SENT_SENT0B			**Receive input channel 0**
	EDSADC_DSCIN7B			**Modulator clock input**
	EVADC_G9CH11	AI		**Analog input channel 11, group 9**
	EDSADC_EDS5NA			**Negative analog input channel 5, pin A**
	P00.1	O0		**General-purpose output**
	GTM_TOUT10	O1		**GTM muxed output**
	IOM_REF0_10			**Reference input 0**
	ASCLIN3_ATX	O2		**Transmit output**
	IOM_MON2_15			**Monitor input 2**
	IOM_REF2_15			**Reference input 2**
	—	O3		**Reserved**
	EDSADC_DSCOUT5	O4		**Modulator clock output**
	EDSADC_DSCOUT7	O5		**Modulator clock output**
	SENT_SPC0	O6		**Transmit output**
	CCU61_CC60	O7		**T12 PWM channel 60**
	IOM_MON1_8			**Monitor input 1**
	IOM_REF1_13			**Reference input 1**

Downloaded by IFXDMZ|par-zengzhe 12/02/2019 11:04:31

Table 2-1 Port 00 Functions (cont'd)

Ball	Symbol	Ctrl.	Buffer Type	Function
N6	P00.2	I	SLOW / PU1 / VEXT / ES1	**General-purpose input**
	GTM_TIM5_IN6_11			**Mux input channel 6 of TIM module 5**
	GTM_TIM3_IN1_2			**Mux input channel 1 of TIM module 3**
	GTM_TIM2_IN1_2			**Mux input channel 1 of TIM module 2**
	EDSADC_DSDIN7B			**Digital datastream input**
	EDSADC_DSDIN5A			**Digital datastream input**
	SENT_SENT1B			**Receive input channel 1**
	EVADC_G9CH10	AI		**Analog input channel 10, group 9**
	EDSADC_EDS5PA			**Positive analog input channel 5, pin A**
	P00.2	O0		**General-purpose output**
	GTM_TOUT11	O1		**GTM muxed output**
	IOM_REF0_11			**Reference input 0**
	ASCLIN3_ASCLK	O2		**Shift clock output**
	CAN21_TXD	O3		**CAN transmit output node 1**
	PSI5_TX0	O4		**TXD outputs (send data)**
	IOM_MON1_14			**Monitor input 1**
	IOM_REF1_14			**Reference input 1**
	CAN03_TXD	O5		**CAN transmit output node 3**
	IOM_MON2_8			**Monitor input 2**
	IOM_REF2_8			**Reference input 2**
	QSPI3_SLSO4	O6		**Master slave select output**
	CCU61_COUT60	O7		**T12 PWM channel 60**
	IOM_MON1_11			**Monitor input 1**
	IOM_REF1_10			**Reference input 1**

Downloaded by IFXDMZ|par-zengzhe 12/02/2019 11:04:31

Table 2-1 Port 00 Functions (cont'd)

Ball	Symbol	Ctrl.	Buffer Type	Function
N7	P00.3	I	SLOW / PU1 / VEXT / ES1	**General-purpose input**
	GTM_TIM5_IN7_10			**Mux input channel 7 of TIM module 5**
	GTM_TIM3_IN2_1			**Mux input channel 2 of TIM module 3**
	GTM_TIM2_IN2_1			**Mux input channel 2 of TIM module 2**
	CCU60_CC61INB			**T12 capture input 61**
	EDSADC_DSCIN3A			**Modulator clock input**
	EDSADC_ITR5F			**Trigger/Gate input**
	PSI5_RX1A			**RXD inputs (receive data) channel 1**
	CAN03_RXDA			**CAN receive input node 3**
	CAN21_RXDA			**CAN receive input node 1**
	PSI5S_RXA			**RX data input**
	SENT_SENT2B			**Receive input channel 2**
	CCU61_CC61INA			**T12 capture input 61**
	EVADC_G9CH9	AI		**Analog input channel 9, group 9**
	EDSADC_EDS5NB			**Negative analog input channel 5, pin B**
	P00.3	O0		**General-purpose output**
	GTM_TOUT12	O1		**GTM muxed output**
	IOM_REF0_12			**Reference input 0**
	ASCLIN3_ASLSO	O2		**Slave select signal output**
	—	O3		**Reserved**
	EDSADC_DSCOUT3	O4		**Modulator clock output**
	—	O5		**Reserved**
	SENT_SPC2	O6		**Transmit output**
	CCU61_CC61	O7		**T12 PWM channel 61**
	IOM_MON1_9			**Monitor input 1**
	IOM_REF1_12			**Reference input 1**

Downloaded by IFXDMZlpar-zengzhe 12/02/2019 11:04:31

Table 2-1 Port 00 Functions (cont'd)

Ball	Symbol	Ctrl.	Buffer Type	Function
P6	P00.4	I	SLOW / PU1 / VEXT / ES1	**General-purpose input**
	GTM_TIM6_IN4_1			**Mux input channel 4 of TIM module 6**
	GTM_TIM3_IN3_1			**Mux input channel 3 of TIM module 3**
	GTM_TIM2_IN3_1			**Mux input channel 3 of TIM module 2**
	SCU_E_REQ2_2			**ERU Channel 2 inputs 0 to 5 (0 is the LSB and 5 is the MSB)**
	SENT_SENT3B			**Receive input channel 3**
	EDSADC_DSDIN3A			**Digital datastream input**
	EDSADC_SGNA			**Carrier sign signal input**
	ASCLIN10_ARXA			**Receive input**
	GTM_DTMA5_0			**CDTM5_DTM4**
	GTM_DTMT3_0			**CDTM3_DTM0**
	EVADC_G9CH8	AI		**Analog input channel 8, group 9**
	EDSADC_EDS5PB			**Positive analog input channel 5, pin B**
	P00.4	O0		**General-purpose output**
	GTM_TOUT13	O1		**GTM muxed output**
	IOM_REF0_13			**Reference input 0**
	PSI5S_TX	O2		**TX data output**
	CAN11_TXD	O3		**CAN transmit output node 1**
	PSI5_TX1	O4		**TXD outputs (send data)**
	IOM_MON1_15			**Monitor input 1**
	EVADC_FC4BFLOUT	O5		**Boundary flag output, FC channel 4**
	SENT_SPC3	O6		**Transmit output**
	CCU61_COUT61	O7		**T12 PWM channel 61**
	IOM_MON1_12			**Monitor input 1**
	IOM_REF1_9			**Reference input 1**

Downloaded by IFXDMZlpar-zengzhe 12/02/2019 11:04:31

Table 2-1 Port 00 Functions (cont'd)

Ball	Symbol	Ctrl.	Buffer Type	Function
P7	P00.5	I	SLOW / PU1 / VEXT / ES1	**General-purpose input**
	GTM_TIM3_IN4_1			**Mux input channel 4 of TIM module 3**
	GTM_TIM3_IN0_11			**Mux input channel 0 of TIM module 3**
	GTM_TIM2_IN4_1			**Mux input channel 4 of TIM module 2**
	CCU60_CC62INB			**T12 capture input 62**
	EDSADC_DSCIN2A			**Modulator clock input**
	PSI5_RX2A			**RXD inputs (receive data) channel 2**
	CCU61_CC62INA			**T12 capture input 62**
	SENT_SENT4B			**Receive input channel 4**
	CAN11_RXDB			**CAN receive input node 1**
	GTM_DTMT1_1			**CDTM1_DTM0**
	GTM_DTMT4_2			**CDTM4_DTM0**
	EVADC_G9CH7	AI		**Analog input channel 7, group 9**
	P00.5	O0		**General-purpose output**
	GTM_TOUT14	O1		**GTM muxed output**
	IOM_REF0_14			**Reference input 0**
	EDSADC_CGPWMN	O2		**Negative carrier generator output**
	QSPI3_SLSO3	O3		**Master slave select output**
	EDSADC_DSCOUT2	O4		**Modulator clock output**
	EVADC_FC0BFLOUT	O5		**Boundary flag output, FC channel 0**
	SENT_SPC4	O6		**Transmit output**
	CCU61_CC62	O7		**T12 PWM channel 62**
	IOM_MON1_10			**Monitor input 1**
	IOM_REF1_11			**Reference input 1**

Downloaded by IFXDMZlpar-zengzhe 12/02/2019 11:04:31

Table 2-1 Port 00 Functions (cont'd)

Ball	Symbol	Ctrl.	Buffer Type	Function
P9	P00.6	I	SLOW / PU1 / VEXT / ES1	**General-purpose input**
	GTM_TIM3_IN5_1			**Mux input channel 5 of TIM module 3**
	GTM_TIM3_IN1_14			**Mux input channel 1 of TIM module 3**
	GTM_TIM2_IN5_1			**Mux input channel 5 of TIM module 2**
	EDSADC_ITR4F			**Trigger/Gate input**
	EDSADC_DSDIN2A			**Digital datastream input**
	SENT_SENT5B			**Receive input channel 5**
	ASCLIN5_ARXA			**Receive input**
	GTM_DTMA6_0			**CDTM6_DTM4**
	GTM_DTMT3_1			**CDTM3_DTM0**
	EVADC_G9CH6	AI		**Analog input channel 6, group 9**
	P00.6	O0		**General-purpose output**
	GTM_TOUT15	O1		**GTM muxed output**
	IOM_REF0_15			**Reference input 0**
	EDSADC_CGPWMP	O2		**Positive carrier generator output**
	EVADC_FC5BFLOUT	O3		**Boundary flag output, FC channel 5**
	PSI5_TX2	O4		**TXD outputs (send data)**
	IOM_REF1_15			**Reference input 1**
	EVADC_EMUX10	O5		**Control of external analog multiplexer interface 1**
	SENT_SPC5	O6		**Transmit output**
	CCU61_COUT62	O7		**T12 PWM channel 62**
	IOM_MON1_13			**Monitor input 1**
	IOM_REF1_8			**Reference input 1**

Downloaded by IFXDMZ|par-zengzhe 12/02/2019 11:04:31

Table 2-1 Port 00 Functions (cont'd)

Ball	Symbol	Ctrl.	Buffer Type	Function
R6	P00.7	I	SLOW / PU1 / VEXT / ES1	**General-purpose input**
	GTM_TIM3_IN6_1			**Mux input channel 6 of TIM module 3**
	GTM_TIM3_IN2_11			**Mux input channel 2 of TIM module 3**
	GTM_TIM2_IN6_1			**Mux input channel 6 of TIM module 2**
	CCU61_CC60INC			**T12 capture input 60**
	SENT_SENT6B			**Receive input channel 6**
	EDSADC_DSCIN4A			**Modulator clock input**
	GPT120_T2INA			**Trigger/gate input of timer T2**
	CCU61_CCPOS0A			**Hall capture input 0**
	CCU60_T12HRB			**External timer start 12**
	GTM_DTMT0_2			**CDTM0_DTM0**
	EVADC_G9CH5	AI		**Analog input channel 5, group 9**
	EDSADC_EDS4NA			**Negative analog input channel 4, pin A**
	P00.7	O0		**General-purpose output**
	GTM_TOUT16	O1		**GTM muxed output**
	ASCLIN5_ATX	O2		**Transmit output**
	EVADC_FC2BFLOUT	O3		**Boundary flag output, FC channel 2**
	EDSADC_DSCOUT4	O4		**Modulator clock output**
	EVADC_EMUX11	O5		**Control of external analog multiplexer interface 1**
	SENT_SPC6	O6		**Transmit output**
	CCU61_CC60	O7		**T12 PWM channel 60**
	IOM_MON1_8			**Monitor input 1**
	IOM_REF1_13			**Reference input 1**

Downloaded by IFXDMZ|par-zengzhe 12/02/2019 11:04:31

Table 2-1 Port 00 Functions (cont'd)

Ball	Symbol	Ctrl.	Buffer Type	Function
R9	P00.8	I	SLOW / PU1 / VEXT / ES1	**General-purpose input**
	GTM_TIM3_IN7_1			**Mux input channel 7 of TIM module 3**
	GTM_TIM3_IN3_11			**Mux input channel 3 of TIM module 3**
	GTM_TIM2_IN7_1			**Mux input channel 7 of TIM module 2**
	CCU61_CC61INC			**T12 capture input 61**
	SENT_SENT7B			**Receive input channel 7**
	EDSADC_DSDIN4A			**Digital datastream input**
	GPT120_T2EUDA			**Count direction control input of timer T2**
	CCU61_CCPOS1A			**Hall capture input 1**
	CCU60_T13HRB			**External timer start 13**
	ASCLIN10_ARXB			**Receive input**
	EVADC_G9CH4	AI		**Analog input channel 4, group 9**
	EDSADC_EDS4PA			**Positive analog input channel 4, pin A**
	P00.8	O0		**General-purpose output**
	GTM_TOUT17	O1		**GTM muxed output**
	QSPI3_SLSO6	O2		**Master slave select output**
	ASCLIN10_ATX	O3		**Transmit output**
	—	O4		**Reserved**
	EVADC_EMUX12	O5		**Control of external analog multiplexer interface 1**
	SENT_SPC7	O6		**Transmit output**
	CCU61_CC61	O7		**T12 PWM channel 61**
	IOM_MON1_9			**Monitor input 1**
	IOM_REF1_12			**Reference input 1**

Downloaded by IFXDMZlpar-zengzhe 12/02/2019 11:04:31

Table 2-1 Port 00 Functions (cont'd)

Ball	Symbol	Ctrl.	Buffer Type	Function
R7	P00.9	I	SLOW / PU1 / VEXT / ES1	**General-purpose input**
	GTM_TIM4_IN0_7			**Mux input channel 0 of TIM module 4**
	GTM_TIM1_IN0_1			**Mux input channel 0 of TIM module 1**
	GTM_TIM0_IN0_1			**Mux input channel 0 of TIM module 0**
	CCU61_CC62INC			**T12 capture input 62**
	SENT_SENT8B			**Receive input channel 8**
	CCU61_CCPOS2A			**Hall capture input 2**
	EDSADC_DSCIN1A			**Modulator clock input**
	EDSADC_ITR3F			**Trigger/Gate input**
	GPT120_T4EUDA			**Count direction control input of timer T4**
	CCU60_T13HRC			**External timer start 13**
	CCU60_T12HRC			**External timer start 12**
	EVADC_G9CH3	AI		**Analog input channel 3, group 9**
	EDSADC_EDS4NB			**Negative analog input channel 4, pin B**
	P00.9	O0		**General-purpose output**
	GTM_TOUT18	O1		**GTM muxed output**
	QSPI3_SLSO7	O2		**Master slave select output**
	ASCLIN3_ARTS	O3		**Ready to send output**
	EDSADC_DSCOUT1	O4		**Modulator clock output**
	ASCLIN4_ATX	O5		**Transmit output**
	SENT_SPC8	O6		**Transmit output**
	CCU61_CC62	O7		**T12 PWM channel 62**
	IOM_MON1_10			**Monitor input 1**
	IOM_REF1_11			**Reference input 1**

Downloaded by IFXDMZ|par-zengzhe 12/02/2019 11:04:31

Table 2-1 Port 00 Functions (cont'd)

Ball	Symbol	Ctrl.	Buffer Type	Function
R10	P00.10	I	SLOW / PU1 / VEXT / ES1	**General-purpose input**
	GTM_TIM4_IN1_11			**Mux input channel 1 of TIM module 4**
	GTM_TIM1_IN1_1			**Mux input channel 1 of TIM module 1**
	GTM_TIM0_IN1_1			**Mux input channel 1 of TIM module 0**
	SENT_SENT9B			**Receive input channel 9**
	EDSADC_DSDIN1A			**Digital datastream input**
	EVADC_G9CH2	AI		**Analog input channel 2, group 9**
	EDSADC_EDS4PB			**Positive analog input channel 4, pin B**
	P00.10	O0		**General-purpose output**
	GTM_TOUT19	O1		**GTM muxed output**
	ASCLIN4_ASCLK	O2		**Shift clock output**
	—	O3		**Reserved**
	—	O4		**Reserved**
	—	O5		**Reserved**
	SENT_SPC9	O6		**Transmit output**
	CCU61_COUT63	O7		**T13 PWM channel 63**
	IOM_MON1_7			**Monitor input 1**
	IOM_REF1_7			**Reference input 1**
T6	P00.11	I	SLOW / PU1 / VEXT / ES1	**General-purpose input**
	GTM_TIM4_IN2_11			**Mux input channel 2 of TIM module 4**
	GTM_TIM1_IN2_1			**Mux input channel 2 of TIM module 1**
	GTM_TIM0_IN2_1			**Mux input channel 2 of TIM module 0**
	CCU60_CTRAPA			**Trap input capture**
	EDSADC_DSCIN0A			**Modulator clock input**
	CCU61_T12HRE			**External timer start 12**
	SENT_SENT10B			**Receive input channel 10**
	EVADC_G9CH1	AI		**Analog input channel 1, group 9**
	EVADC_FC3CH0			**Analog input FC channel 3**
	P00.11	O0		**General-purpose output**
	GTM_TOUT20	O1		**GTM muxed output**
	ASCLIN4_ASLSO	O2		**Slave select signal output**
	—	O3		**Reserved**
	EDSADC_DSCOUT0	O4		**Modulator clock output**
	—	O5		**Reserved**
	—	O6		**Reserved**
	—	O7		**Reserved**

Downloaded by IFXDMZ|par-zengzhe 12/02/2019 11:04:31

Table 2-1 Port 00 Functions (cont'd)

Ball	Symbol	Ctrl.	Buffer Type	Function
T7	P00.12	I	SLOW / PU1 / VEXT / ES1	**General-purpose input**
	GTM_TIM4_IN3_11			**Mux input channel 3 of TIM module 4**
	GTM_TIM1_IN3_1			**Mux input channel 3 of TIM module 1**
	GTM_TIM0_IN3_1			**Mux input channel 3 of TIM module 0**
	ASCLIN3_ACTSA			**Clear to send input**
	EDSADC_DSDIN0A			**Digital datastream input**
	ASCLIN4_ARXA			**Receive input**
	SENT_SENT11B			**Receive input channel 11**
	EVADC_G9CH0	AI		**Analog input channel 0, group 9**
	EVADC_FC2CH0			**Analog input FC channel 2**
	P00.12	O0		**General-purpose output**
	GTM_TOUT21	O1		**GTM muxed output**
	—	O2		**Reserved**
	—	O3		**Reserved**
	—	O4		**Reserved**
	—	O5		**Reserved**
	—	O6		**Reserved**
	CCU61_COUT63	O7		**T13 PWM channel 63**
	IOM_MON1_7			**Monitor input 1**
	IOM_REF1_7			**Reference input 1**
T2	P00.13	I	FAST / PU1 / VEXT / ES	**General-purpose input**
	GTM_TIM6_IN5_2			**Mux input channel 5 of TIM module 6**
	GTM_TIM5_IN0_1			**Mux input channel 0 of TIM module 5**
	GTM_TIM4_IN0_1			**Mux input channel 0 of TIM module 4**
	EDSADC_DSDIN6A			**Digital datastream input**
	P00.13	O0		**General-purpose output**
	GTM_TOUT167	O1		**GTM muxed output**
	—	O2		**Reserved**
	—	O3		**Reserved**
	CCU_EXTCLK1	O4		**CCU external clock**
	—	O5		**Reserved**
	—	O6		**Reserved**
	—	O7		**Reserved**

Downloaded by IFXDMZ|par-zengzhe 12/02/2019 11:04:31

Table 2-1 Port 00 Functions (cont'd)

Ball	Symbol	Ctrl.	Buffer Type	Function
U2	P00.14	I	SLOW / PU1 / VEXT / ES	**General-purpose input**
	GTM_TIM6_IN6_2			**Mux input channel 6 of TIM module 6**
	GTM_TIM5_IN7_1			**Mux input channel 7 of TIM module 5**
	GTM_TIM4_IN7_1			**Mux input channel 7 of TIM module 4**
	EDSADC_DSCIN6A			**Modulator clock input**
	P00.14	O0		**General-purpose output**
	GTM_TOUT166	O1		**GTM muxed output**
	—	O2		**Reserved**
	—	O3		**Reserved**
	EDSADC_DSCOUT6	O4		**Modulator clock output**
	—	O5		**Reserved**
	—	O6		**Reserved**
	—	O7		**Reserved**
U1	P00.15	I	FAST / PU1 / VEXT / ES	**General-purpose input**
	GTM_TIM6_IN7_2			**Mux input channel 7 of TIM module 6**
	GTM_TIM5_IN1_1			**Mux input channel 1 of TIM module 5**
	GTM_TIM4_IN1_1			**Mux input channel 1 of TIM module 4**
	EDSADC_ITR6F			**Trigger/Gate input**
	P00.15	O0		**General-purpose output**
	GTM_TOUT168	O1		**GTM muxed output**
	—	O2		**Reserved**
	—	O3		**Reserved**
	CCU_EXTCLK0	O4		**CCU external clock**
	—	O5		**Reserved**
	—	O6		**Reserved**
	—	O7		**Reserved**

Downloaded by IFXDMZ|par-zengzhe 12/02/2019 11:04:31

Table 2-2 Port 01 Functions

Ball	Symbol	Ctrl.	Buffer Type	Function
J2	P01.0	I	SLOW / PU1 / VEXT / ES	**General-purpose input**
	GTM_TIM5_IN4_1			**Mux input channel 4 of TIM module 5**
	GTM_TIM4_IN4_1			**Mux input channel 4 of TIM module 4**
	GTM_TIM2_IN6_13			**Mux input channel 6 of TIM module 2**
	CAN21_RXDE			**CAN receive input node 1**
	EDSADC_ITR6E			**Trigger/Gate input**
	CAN03_RXDF			**CAN receive input node 3**
	ASCLIN6_ARXB			**Receive input**
	P01.0	O0		**General-purpose output**
	GTM_TOUT155	O1		**GTM muxed output**
	—	O2		**Reserved**
	—	O3		**Reserved**
	—	O4		**Reserved**
	—	O5		**Reserved**
	—	O6		**Reserved**
	—	O7		**Reserved**
K1	P01.1	I	SLOW / PU1 / VEXT / ES	**General-purpose input**
	GTM_TIM5_IN1_2			**Mux input channel 1 of TIM module 5**
	GTM_TIM4_IN1_2			**Mux input channel 1 of TIM module 4**
	EDSADC_ITR8E			**Trigger/Gate input**
	ERAY1_RXDA1			**Receive Channel A1**
	SENT_SENT15B			**Receive input channel 15**
	P01.1	O0		**General-purpose output**
	GTM_TOUT159	O1		**GTM muxed output**
	—	O2		**Reserved**
	—	O3		**Reserved**
	ASCLIN6_ATX	O4		**Transmit output**
	—	O5		**Reserved**
	—	O6		**Reserved**
	—	O7		**Reserved**

Downloaded by IFXDMZ|par-zengzhe 12/02/2019 11:04:31

Table 2-2 Port 01 Functions (cont'd)

Ball	Symbol	Ctrl.	Buffer Type	Function
K2	P01.2	I	SLOW / PU1 / VEXT / ES	**General-purpose input**
	GTM_TIM5_IN5_1			**Mux input channel 5 of TIM module 5**
	GTM_TIM4_IN5_1			**Mux input channel 5 of TIM module 4**
	EDSADC_DSCIN7A			**Modulator clock input**
	P01.2	O0		**General-purpose output**
	GTM_TOUT156	O1		**GTM muxed output**
	—	O2		**Reserved**
	CAN03_TXD	O3		**CAN transmit output node 3**
	IOM_MON2_8			**Monitor input 2**
	IOM_REF2_8			**Reference input 2**
	—	O4		**Reserved**
	CAN21_TXD	O5		**CAN transmit output node 1**
	EDSADC_DSCOUT7	O6		**Modulator clock output**
	—	O7		**Reserved**
M10	P01.3	I	SLOW / PU1 / VEXT / ES	**General-purpose input**
	GTM_TIM4_IN5_2			**Mux input channel 5 of TIM module 4**
	GTM_TIM2_IN0_14			**Mux input channel 0 of TIM module 2**
	GTM_TIM0_IN5_8			**Mux input channel 5 of TIM module 0**
	QSPI3_SLSIB			**Slave select input**
	EDSADC_ITR7F			**Trigger/Gate input**
	EVADC_G9CH14	AI		**Analog input channel 14, group 9**
	P01.3	O0		**General-purpose output**
	GTM_TOUT111	O1		**GTM muxed output**
	—	O2		**Reserved**
	—	O3		**Reserved**
	QSPI3_SLSO9	O4		**Master slave select output**
	CAN01_TXD	O5		**CAN transmit output node 1**
	IOM_MON2_6			**Monitor input 2**
	IOM_REF2_6			**Reference input 2**
	—	O6		**Reserved**
	—	O7		**Reserved**

Downloaded by IFXDMZ|par-zengzhe 12/02/2019 11:04:31

Table 2-2 Port 01 Functions (cont'd)

Ball	Symbol	Ctrl.	Buffer Type	Function
M9	P01.4	I	SLOW / PU1 / VEXT / ES	**General-purpose input**
	GTM_TIM4_IN6_2			**Mux input channel 6 of TIM module 4**
	GTM_TIM2_IN1_14			**Mux input channel 1 of TIM module 2**
	GTM_TIM0_IN6_8			**Mux input channel 6 of TIM module 0**
	CAN01_RXDC			**CAN receive input node 1**
	EDSADC_ITR7E			**Trigger/Gate input**
	EVADC_G9CH13	AI		**Analog input channel 13, group 9**
	P01.4	O0		**General-purpose output**
	GTM_TOUT112	O1		**GTM muxed output**
	—	O2		**Reserved**
	ASCLIN9_ASLSO	O3		**Slave select signal output**
	QSPI3_SLSO10	O4		**Master slave select output**
	—	O5		**Reserved**
	—	O6		**Reserved**
	—	O7		**Reserved**
N10	P01.5	I	SLOW / PU1 / VEXT / ES	**General-purpose input**
	GTM_TIM5_IN3_2			**Mux input channel 3 of TIM module 5**
	GTM_TIM2_IN3_7			**Mux input channel 3 of TIM module 2**
	GTM_TIM2_IN2_7			**Mux input channel 2 of TIM module 2**
	QSPI3_MRSTC			**Master SPI data input**
	EDSADC_DSCIN8A			**Modulator clock input**
	ASCLIN9_ARXA			**Receive input**
	EVADC_G9CH12	AI		**Analog input channel 12, group 9**
	P01.5	O0		**General-purpose output**
	GTM_TOUT113	O1		**GTM muxed output**
	—	O2		**Reserved**
	—	O3		**Reserved**
	QSPI3_MRST	O4		**Slave SPI data output**
	IOM_MON2_3			**Monitor input 2**
	IOM_REF2_3			**Reference input 2**
	—	O5		**Reserved**
	EDSADC_DSCOUT8	O6		**Modulator clock output**
	—	O7		**Reserved**

Downloaded by IFXDMZlpar-zengzhe 12/02/2019 11:04:31

Table 2-2 Port 01 Functions (cont'd)

Ball	Symbol	Ctrl.	Buffer Type	Function
N9	P01.6	I	FAST / PU1 / VEXT / ES	**General-purpose input**
	GTM_TIM5_IN6_2			**Mux input channel 6 of TIM module 5**
	GTM_TIM5_IN5_3			**Mux input channel 5 of TIM module 5**
	GTM_TIM2_IN5_7			**Mux input channel 5 of TIM module 2**
	QSPI3_MTSRC			**Save SPI data input**
	EDSADC_DSDIN8A			**Digital datastream input**
	P01.6	O0		**General-purpose output**
	GTM_TOUT114	O1		**GTM muxed output**
	—	O2		**Reserved**
	ASCLIN9_ASCLK	O3		**Shift clock output**
	QSPI3_MTSR	O4		**Master SPI data output**
	—	O5		**Reserved**
	—	O6		**Reserved**
	—	O7		**Reserved**
P10	P01.7	I	FAST / PU1 / VEXT / ES	**General-purpose input**
	GTM_TIM5_IN7_2			**Mux input channel 7 of TIM module 5**
	GTM_TIM2_IN7_7			**Mux input channel 7 of TIM module 2**
	QSPI3_SCLKC			**Slave SPI clock inputs**
	EDSADC_ITR8F			**Trigger/Gate input**
	ASCLIN9_ARXB			**Receive input**
	P01.7	O0		**General-purpose output**
	GTM_TOUT115	O1		**GTM muxed output**
	—	O2		**Reserved**
	ASCLIN9_ATX	O3		**Transmit output**
	QSPI3_SCLK	O4		**Master SPI clock output**
	—	O5		**Reserved**
	—	O6		**Reserved**
	—	O7		**Reserved**

Downloaded by IFXDMZlpar-zengzhe 12/02/2019 11:04:31

Table 2-2 Port 01 Functions (cont'd)

Ball	Symbol	Ctrl.	Buffer Type	Function
L1	P01.8	I	SLOW / PU1 / VEXT / ES	**General-purpose input**
	GTM_TIM5_IN4_2			**Mux input channel 4 of TIM module 5**
	GTM_TIM5_IN0_10			**Mux input channel 0 of TIM module 5**
	GTM_TIM4_IN4_2			**Mux input channel 4 of TIM module 4**
	CAN00_RXDF			**CAN receive input node 0**
	ERAY1_RXDB1			**Receive Channel B1**
	EDSADC_DSDIN9A			**Digital datastream input**
	SENT_SENT17B			**Receive input channel 17**
	ASCLIN0_ARXC			**Receive input**
	CAN20_RXDE			**CAN receive input node 0**
	ASCLIN7_ARXB			**Receive input**
	P01.8	O0		**General-purpose output**
	GTM_TOUT162	O1		**GTM muxed output**
	—	O2		**Reserved**
	—	O3		**Reserved**
	—	O4		**Reserved**
	—	O5		**Reserved**
	—	O6		**Reserved**
	EVADC_FC4BFLOUT	O7		**Boundary flag output, FC channel 4**
L2	P01.9	I	SLOW / PU1 / VEXT / ES	**General-purpose input**
	GTM_TIM5_IN2_1			**Mux input channel 2 of TIM module 5**
	GTM_TIM5_IN1_11			**Mux input channel 1 of TIM module 5**
	GTM_TIM4_IN2_1			**Mux input channel 2 of TIM module 4**
	EDSADC_DSCIN9A			**Modulator clock input**
	SENT_SENT16B			**Receive input channel 16**
	P01.9	O0		**General-purpose output**
	GTM_TOUT160	O1		**GTM muxed output**
	ASCLIN7_ATX	O2		**Transmit output**
	—	O3		**Reserved**
	—	O4		**Reserved**
	—	O5		**Reserved**
	EDSADC_DSCOUT9	O6		**Modulator clock output**
	EVADC_FC5BFLOUT	O7		**Boundary flag output, FC channel 5**

Downloaded by IFXDMZ|par-zengzhe 12/02/2019 11:04:31

Table 2-2 Port 01 Functions (cont'd)

Ball	Symbol	Ctrl.	Buffer Type	Function
M2	P01.10	I	SLOW / PU1 / VEXT / ES	**General-purpose input**
	GTM_TIM5_IN5_2			**Mux input channel 5 of TIM module 5**
	GTM_TIM5_IN2_9			**Mux input channel 2 of TIM module 5**
	GTM_TIM4_IN5_3			**Mux input channel 5 of TIM module 4**
	EDSADC_ITR9F			**Trigger/Gate input**
	SENT_SENT18B			**Receive input channel 18**
	GTM_DTMT4_0			**CDTM4_DTM0**
	GTM_DTMA6_1			**CDTM6_DTM4**
	GTM_DTMT3_2			**CDTM3_DTM0**
	P01.10	O0		**General-purpose output**
	GTM_TOUT163	O1		**GTM muxed output**
	ASCLIN7_ASCLK	O2		**Shift clock output**
	—	O3		**Reserved**
	—	O4		**Reserved**
	—	O5		**Reserved**
	—	O6		**Reserved**
	EVADC_FC6BFLOUT	O7		**Boundary flag output, FC channel 6**
M1	P01.11	I	SLOW / PU1 / VEXT / ES	**General-purpose input**
	GTM_TIM5_IN7_3			**Mux input channel 7 of TIM module 5**
	GTM_TIM5_IN3_11			**Mux input channel 3 of TIM module 5**
	GTM_TIM4_IN7_2			**Mux input channel 7 of TIM module 4**
	EDSADC_ITR9E			**Trigger/Gate input**
	SENT_SENT19B			**Receive input channel 19**
	GTM_DTMT4_1			**CDTM4_DTM0**
	GTM_DTMA5_1			**CDTM5_DTM4**
	GTM_DTMA6_2			**CDTM6_DTM4**
	P01.11	O0		**General-purpose output**
	GTM_TOUT165	O1		**GTM muxed output**
	ASCLIN7_ASLSO	O2		**Slave select signal output**
	—	O3		**Reserved**
	—	O4		**Reserved**
	—	O5		**Reserved**
	—	O6		**Reserved**
	EVADC_FC7BFLOUT	O7		**Boundary flag output, FC channel 7**

Downloaded by IFXDMZ|par-zengzhe 12/02/2019 11:04:31

Table 2-2 Port 01 Functions (cont'd)

Ball	Symbol	Ctrl.	Buffer Type	Function
N2	P01.12	I	FAST / PU1 / VEXT / ES	**General-purpose input**
	GTM_TIM6_IN0_3			**Mux input channel 0 of TIM module 6**
	GTM_TIM5_IN0_2			**Mux input channel 0 of TIM module 5**
	GTM_TIM4_IN0_2			**Mux input channel 0 of TIM module 4**
	EDSADC_DSDIN10A			**Digital datastream input**
	EDSADC_ITR10F			**Trigger/Gate input**
	P01.12	O0		**General-purpose output**
	GTM_TOUT158	O1		**GTM muxed output**
	ASCLIN7_ATX	O2		**Transmit output**
	—	O3		**Reserved**
	—	O4		**Reserved**
	—	O5		**Reserved**
	ERAY1_TXDA	O6		**Transmit Channel A**
	—	O7		**Reserved**
N1	P01.13	I	FAST / PU1 / VEXT / ES	**General-purpose input**
	GTM_TIM6_IN1_3			**Mux input channel 1 of TIM module 6**
	GTM_TIM5_IN3_1			**Mux input channel 3 of TIM module 5**
	GTM_TIM4_IN3_1			**Mux input channel 3 of TIM module 4**
	EDSADC_DSCIN10A			**Modulator clock input**
	EDSADC_ITR10E			**Trigger/Gate input**
	P01.13	O0		**General-purpose output**
	GTM_TOUT161	O1		**GTM muxed output**
	ASCLIN0_ATX	O2		**Transmit output**
	IOM_MON2_12			**Monitor input 2**
	IOM_REF2_12			**Reference input 2**
	—	O3		**Reserved**
	CAN00_TXD	O4		**CAN transmit output node 0**
	IOM_MON2_5			**Monitor input 2**
	IOM_REF2_5			**Reference input 2**
	CAN20_TXD	O5		**CAN transmit output node 0**
	ERAY1_TXDB	O6		**Transmit Channel B**
	EDSADC_DSCOUT10	O7		**Modulator clock output**

Downloaded by IFXDMZ|par-zengzhe 12/02/2019 11:04:31

Table 2-2 Port 01 Functions (cont'd)

Ball	Symbol	Ctrl.	Buffer Type	Function
P2	P01.14	I	FAST / PU1 / VEXT / ES	**General-purpose input**
	GTM_TIM6_IN2_3			**Mux input channel 2 of TIM module 6**
	GTM_TIM5_IN6_3			**Mux input channel 6 of TIM module 5**
	GTM_TIM4_IN6_3			**Mux input channel 6 of TIM module 4**
	EDSADC_DSDIN11A			**Digital datastream input**
	EDSADC_ITR11F			**Trigger/Gate input**
	P01.14	O0		**General-purpose output**
	GTM_TOUT164	O1		**GTM muxed output**
	—	O2		**Reserved**
	—	O3		**Reserved**
	—	O4		**Reserved**
	—	O5		**Reserved**
	ERAY1_TXENA	O6		**Transmit Enable Channel A**
	—	O7		**Reserved**
P1	P01.15	I	SLOW / PU1 / VEXT / ES	**General-purpose input**
	GTM_TIM6_IN3_3			**Mux input channel 3 of TIM module 6**
	GTM_TIM5_IN6_1			**Mux input channel 6 of TIM module 5**
	GTM_TIM4_IN6_1			**Mux input channel 6 of TIM module 4**
	EDSADC_DSDIN7A			**Digital datastream input**
	EDSADC_DSCIN11A			**Modulator clock input**
	EDSADC_ITR11E			**Trigger/Gate input**
	P01.15	O0		**General-purpose output**
	GTM_TOUT157	O1		**GTM muxed output**
	—	O2		**Reserved**
	—	O3		**Reserved**
	—	O4		**Reserved**
	—	O5		**Reserved**
	—	O6		**Reserved**
	EDSADC_DSCOUT11	O7		**Modulator clock output**

Downloaded by IFXDMZ|par-zengzhe 12/02/2019 11:04:31

Table 2-3 Port 02 Functions

Ball	Symbol	Ctrl.	Buffer Type	Function
G6	P02.0	I	FAST / PU1 / VEXT / ES	**General-purpose input**
	GTM_TIM1_IN0_2			**Mux input channel 0 of TIM module 1**
	GTM_TIM0_IN0_2			**Mux input channel 0 of TIM module 0**
	CCU61_CC60INB			**T12 capture input 60**
	ASCLIN2_ARXG			**Receive input**
	CCU60_CC60INA			**T12 capture input 60**
	SCU_E_REQ3_2			**ERU Channel 3 inputs 0 to 5 (0 is the LSB and 5 is the MSB)**
	GTM_DTMA0_0			**CDTM0_DTM4**
	P02.0	O0		**General-purpose output**
	GTM_TOUT0	O1		**GTM muxed output**
	IOM_REF0_0			**Reference input 0**
	ASCLIN2_ATX	O2		**Transmit output**
	IOM_MON2_14			**Monitor input 2**
	IOM_REF2_14			**Reference input 2**
	QSPI3_SLSO1	O3		**Master slave select output**
	EDSADC_CGPWMN	O4		**Negative carrier generator output**
	CAN00_TXD	O5		**CAN transmit output node 0**
	IOM_MON2_5			**Monitor input 2**
	IOM_REF2_5			**Reference input 2**
	ERAY0_TXDA	O6		**Transmit Channel A**
	CCU60_CC60	O7		**T12 PWM channel 60**
	IOM_MON1_2			**Monitor input 1**
	IOM_REF1_6			**Reference input 1**

Downloaded by IFXDMZlpar-zengzhe 12/02/2019 11:04:31

Table 2-3 Port 02 Functions (cont'd)

Ball	Symbol	Ctrl.	Buffer Type	Function
H7	P02.1	I	SLOW / PU1 / VEXT / ES	**General-purpose input**
	GTM_TIM1_IN1_2			**Mux input channel 1 of TIM module 1**
	GTM_TIM0_IN1_2			**Mux input channel 1 of TIM module 0**
	ERAY0_RXDA2			**Receive Channel A2**
	ASCLIN2_ARXB			**Receive input**
	CAN00_RXDA			**CAN receive input node 0**
	SCU_E_REQ2_1			**ERU Channel 2 inputs 0 to 5 (0 is the LSB and 5 is the MSB)**
	P02.1	O0		**General-purpose output**
	GTM_TOUT1	O1		**GTM muxed output**
	IOM_REF0_1			**Reference input 0**
	QSPI4_SLSO7	O2		**Master slave select output**
	QSPI3_SLSO2	O3		**Master slave select output**
	EDSADC_CGPWMP	O4		**Positive carrier generator output**
	—	O5		**Reserved**
	—	O6		**Reserved**
	CCU60_COUT60	O7		**T12 PWM channel 60**
	IOM_MON1_3			**Monitor input 1**
	IOM_REF1_3			**Reference input 1**

Downloaded by IFXDMZlpar-zengzhe 12/02/2019 11:04:31

Table 2-3 Port 02 Functions (cont'd)

Ball	Symbol	Ctrl.	Buffer Type	Function
H6	P02.2	I	FAST / PU1 / VEXT / ES	**General-purpose input**
	GTM_TIM1_IN2_2			**Mux input channel 2 of TIM module 1**
	GTM_TIM0_IN2_2			**Mux input channel 2 of TIM module 0**
	CCU61_CC61INB			**T12 capture input 61**
	CCU60_CC61INA			**T12 capture input 61**
	SENT_SENT14B			**Receive input channel 14**
	P02.2	O0		**General-purpose output**
	GTM_TOUT2	O1		**GTM muxed output**
	IOM_REF0_2			**Reference input 0**
	ASCLIN1_ATX	O2		**Transmit output**
	IOM_MON2_13			**Monitor input 2**
	IOM_REF2_13			**Reference input 2**
	QSPI3_SLSO3	O3		**Master slave select output**
	PSI5_TX0	O4		**TXD outputs (send data)**
	IOM_MON1_14			**Monitor input 1**
	IOM_REF1_14			**Reference input 1**
	CAN02_TXD	O5		**CAN transmit output node 2**
	IOM_MON2_7			**Monitor input 2**
	IOM_REF2_7			**Reference input 2**
	ERAY0_TXDB	O6		**Transmit Channel B**
	CCU60_CC61	O7		**T12 PWM channel 61**
	IOM_MON1_1			**Monitor input 1**
	IOM_REF1_5			**Reference input 1**

Downloaded by IFXDMZ|par-zengzhe 12/02/2019 11:04:31

Table 2-3 Port 02 Functions (cont'd)

Ball	Symbol	Ctrl.	Buffer Type	Function
J7	P02.3	I	SLOW / PU1 / VEXT / ES	**General-purpose input**
	GTM_TIM1_IN3_2			**Mux input channel 3 of TIM module 1**
	GTM_TIM0_IN3_2			**Mux input channel 3 of TIM module 0**
	EDSADC_DSCIN5B			**Modulator clock input**
	ERAY0_RXDB2			**Receive Channel B2**
	CAN02_RXDB			**CAN receive input node 2**
	ASCLIN1_ARXG			**Receive input**
	MSC1_SDI1			**Upstream assynchronous input signal**
	PSI5_RX0B			**RXD inputs (receive data) channel 0**
	SENT_SENT13B			**Receive input channel 13**
	P02.3	O0		**General-purpose output**
	GTM_TOUT3	O1		**GTM muxed output**
	IOM_REF0_3			**Reference input 0**
	ASCLIN2_ASLSO	O2		**Slave select signal output**
	QSPI3_SLSO4	O3		**Master slave select output**
	EDSADC_DSCOUT5	O4		**Modulator clock output**
	—	O5		**Reserved**
	—	O6		**Reserved**
	CCU60_COUT61	O7		**T12 PWM channel 61**
	IOM_MON1_4			**Monitor input 1**
	IOM_REF1_2			**Reference input 1**

Downloaded by IFXDMZ|par-zengzhe 12/02/2019 11:04:31

Table 2-3 Port 02 Functions (cont'd)

Ball	Symbol	Ctrl.	Buffer Type	Function
J6	P02.4	I	FAST / PU1 / VEXT / ES	**General-purpose input**
	GTM_TIM1_IN4_1			**Mux input channel 4 of TIM module 1**
	GTM_TIM0_IN4_1			**Mux input channel 4 of TIM module 0**
	CCU61_CC62INB			**T12 capture input 62**
	EDSADC_DSDIN5B			**Digital datastream input**
	QSPI3_SLSIA			**Slave select input**
	CCU60_CC62INA			**T12 capture input 62**
	I2C0_SDAA			**Serial Data Input**
	CAN11_RXDA			**CAN receive input node 1**
	CAN0_ECTT1			**External CAN time trigger input**
	SENT_SENT12B			**Receive input channel 12**
	P02.4	O0		**General-purpose output**
	GTM_TOUT4	O1		**GTM muxed output**
	IOM_REF0_4			**Reference input 0**
	ASCLIN2_ASCLK	O2		**Shift clock output**
	QSPI3_SLSO0	O3		**Master slave select output**
	PSI5S_CLK	O4		**PSISCLK is a clock that can be used on a pin to drive the external PHY.**
	I2C0_SDA	O5		**Serial Data Output**
	ERAY0_TXENA	O6		**Transmit Enable Channel A**
	CCU60_CC62	O7		**T12 PWM channel 62**
	IOM_MON1_0			**Monitor input 1**
	IOM_REF1_4			**Reference input 1**

Downloaded by IFXDMZlpar-zengzhe 12/02/2019 11:04:31

Table 2-3 Port 02 Functions (cont'd)

Ball	Symbol	Ctrl.	Buffer Type	Function
K7	P02.5	I	FAST / PU1 / VEXT / ES	**General-purpose input**
	GTM_TIM1_IN5_1			**Mux input channel 5 of TIM module 1**
	GTM_TIM0_IN5_1			**Mux input channel 5 of TIM module 0**
	EDSADC_DSCIN4B			**Modulator clock input**
	I2C0_SCLA			**Serial Clock Input**
	PSI5_RX1B			**RXD inputs (receive data) channel 1**
	PSI5S_RXB			**RX data input**
	QSPI3_MRSTA			**Master SPI data input**
	SENT_SENT3C			**Receive input channel 3**
	CAN0_ECTT2			**External CAN time trigger input**
	P02.5	O0		**General-purpose output**
	GTM_TOUT5	O1		**GTM muxed output**
	IOM_REF0_5			**Reference input 0**
	CAN11_TXD	O2		**CAN transmit output node 1**
	QSPI3_MRST	O3		**Slave SPI data output**
	IOM_MON2_3			**Monitor input 2**
	IOM_REF2_3			**Reference input 2**
	EDSADC_DSCOUT4	O4		**Modulator clock output**
	I2C0_SCL	O5		**Serial Clock Output**
	ERAY0_TXENB	O6		**Transmit Enable Channel B**
	CCU60_COUT62	O7		**T12 PWM channel 62**
	IOM_MON1_5			**Monitor input 1**
	IOM_REF1_1			**Reference input 1**

Downloaded by IFXDMZ|par-zengzhe 12/02/2019 11:04:31

Table 2-3 Port 02 Functions (cont'd)

Ball	Symbol	Ctrl.	Buffer Type	Function
K6	P02.6	I	FAST / PU1 / VEXT / ES	**General-purpose input**
	GTM_TIM3_IN0_10			**Mux input channel 0 of TIM module 3**
	GTM_TIM1_IN6_1			**Mux input channel 6 of TIM module 1**
	GTM_TIM0_IN6_1			**Mux input channel 6 of TIM module 0**
	CCU60_CC60INC			**T12 capture input 60**
	SENT_SENT2C			**Receive input channel 2**
	EDSADC_DSDIN4B			**Digital datastream input**
	EDSADC_ITR5E			**Trigger/Gate input**
	GPT120_T3INA			**Trigger/gate input of core timer T3**
	CCU60_CCPOS0A			**Hall capture input 0**
	CCU61_T12HRB			**External timer start 12**
	QSPI3_MTSRA			**Save SPI data input**
	RIF0_RAMP1B			**External RAMP B input**
	P02.6	O0		**General-purpose output**
	GTM_TOUT6	O1		**GTM muxed output**
	IOM_REF0_6			**Reference input 0**
	PSI5S_TX	O2		**TX data output**
	QSPI3_MTSR	O3		**Master SPI data output**
	PSI5_TX1	O4		**TXD outputs (send data)**
	IOM_MON1_15			**Monitor input 1**
	EVADC_EMUX00	O5		**Control of external analog multiplexer interface 0**
	—	O6		**Reserved**
	CCU60_CC60	O7		**T12 PWM channel 60**
	IOM_MON1_2			**Monitor input 1**
	IOM_REF1_6			**Reference input 1**

Downloaded by IFXDMZlpar-zengzhe 12/02/2019 11:04:31

Table 2-3 Port 02 Functions (cont'd)

Ball	Symbol	Ctrl.	Buffer Type	Function
L7	P02.7	I	FAST / PU1 / VEXT / ES	**General-purpose input**
	GTM_TIM3_IN1_10			**Mux input channel 1 of TIM module 3**
	GTM_TIM1_IN7_1			**Mux input channel 7 of TIM module 1**
	GTM_TIM0_IN7_1			**Mux input channel 0 of TIM module 0**
	CCU60_CC61INC			**T12 capture input 61**
	SENT_SENT1C			**Receive input channel 1**
	EDSADC_DSCIN3B			**Modulator clock input**
	EDSADC_ITR4E			**Trigger/Gate input**
	GPT120_T3EUDA			**Count direction control input of core timer T3**
	PSI5_RX2B			**RXD inputs (receive data) channel 2**
	CCU60_CCPOS1A			**Hall capture input 1**
	QSPI3_SCLKA			**Slave SPI clock inputs**
	CCU61_T13HRB			**External timer start 13**
	P02.7	O0		**General-purpose output**
	GTM_TOUT7	O1		**GTM muxed output**
	IOM_REF0_7			**Reference input 0**
	—	O2		**Reserved**
	QSPI3_SCLK	O3		**Master SPI clock output**
	EDSADC_DSCOUT3	O4		**Modulator clock output**
	EVADC_EMUX01	O5		**Control of external analog multiplexer interface 0**
	SENT_SPC1	O6		**Transmit output**
	CCU60_CC61	O7		**T12 PWM channel 61**
	IOM_MON1_1			**Monitor input 1**
	IOM_REF1_5			**Reference input 1**

Downloaded by IFXDMZ|par-zengzhe 12/02/2019 11:04:31

Table 2-3 Port 02 Functions (cont'd)

Ball	Symbol	Ctrl.	Buffer Type	Function
L6	P02.8	I	SLOW / PU1 / VEXT / ES	**General-purpose input**
	GTM_TIM3_IN2_10			**Mux input channel 2 of TIM module 3**
	GTM_TIM3_IN0_2			**Mux input channel 0 of TIM module 3**
	GTM_TIM2_IN0_2			**Mux input channel 0 of TIM module 2**
	CCU60_CC62INC			**T12 capture input 62**
	SENT_SENT0C			**Receive input channel 0**
	CCU60_CCPOS2A			**Hall capture input 2**
	EDSADC_DSDIN3B			**Digital datastream input**
	EDSADC_ITR3E			**Trigger/Gate input**
	GPT120_T4INA			**Trigger/gate input of timer T4**
	CCU61_T12HRC			**External timer start 12**
	CCU61_T13HRC			**External timer start 13**
	GTM_DTMA0_1			**CDTM0_DTM4**
	PMS_PMS_TESTGND_PAD	AI		**Analog GND out for direct connection to GPIO**
	P02.8	O0		**General-purpose output**
	GTM_TOUT8	O1		**GTM muxed output**
	IOM_REF0_8			**Reference input 0**
	QSPI3_SLSO5	O2		**Master slave select output**
	ASCLIN8_ASCLK	O3		**Shift clock output**
	PSI5_TX2	O4		**TXD outputs (send data)**
	IOM_REF1_15			**Reference input 1**
	EVADC_EMUX02	O5		**Control of external analog multiplexer interface 0**
	GETH_MDC	O6		**MDIO clock**
	CCU60_CC62	O7		**T12 PWM channel 62**
	IOM_MON1_0			**Monitor input 1**
	IOM_REF1_4			**Reference input 1**

Downloaded by IFXDMZlpar-zengzhe 12/02/2019 11:04:31

Table 2-3 Port 02 Functions (cont'd)

Ball	Symbol	Ctrl.	Buffer Type	Function
K9	P02.9	I	SLOW / PU1 / VEXT / ES	**General-purpose input**
	GTM_TIM4_IN2_2			**Mux input channel 2 of TIM module 4**
	GTM_TIM3_IN3_10			**Mux input channel 3 of TIM module 3**
	GTM_TIM0_IN2_10			**Mux input channel 2 of TIM module 0**
	SENT_SENT20B			**Receive input channel 20**
	ASCLIN8_ARXA			**Receive input**
	P02.9	O0		**General-purpose output**
	GTM_TOUT116	O1		**GTM muxed output**
	ASCLIN2_ATX	O2		**Transmit output**
	IOM_MON2_14			**Monitor input 2**
	IOM_REF2_14			**Reference input 2**
	ASCLIN8_ATX	O3		**Transmit output**
	—	O4		**Reserved**
	CAN01_TXD	O5		**CAN transmit output node 1**
	IOM_MON2_6			**Monitor input 2**
	IOM_REF2_6			**Reference input 2**
	—	O6		**Reserved**
	—	O7		**Reserved**
L10	P02.10	I	SLOW / PU1 / VEXT / ES	**General-purpose input**
	GTM_TIM4_IN3_2			**Mux input channel 3 of TIM module 4**
	GTM_TIM3_IN4_11			**Mux input channel 4 of TIM module 3**
	GTM_TIM0_IN3_10			**Mux input channel 3 of TIM module 0**
	ASCLIN2_ARXC			**Receive input**
	CAN01_RXDE			**CAN receive input node 1**
	SENT_SENT21B			**Receive input channel 21**
	ASCLIN8_ARXB			**Receive input**
	P02.10	O0		**General-purpose output**
	GTM_TOUT117	O1		**GTM muxed output**
	—	O2		**Reserved**
	—	O3		**Reserved**
	—	O4		**Reserved**
	—	O5		**Reserved**
	—	O6		**Reserved**
	—	O7		**Reserved**

Downloaded by IFXDMZ|par-zengzhe 12/02/2019 11:04:31

Table 2-3 Port 02 Functions (cont'd)

Ball	Symbol	Ctrl.	Buffer Type	Function
L9	P02.11	I	SLOW / PU1 / VEXT / ES	**General-purpose input**
	GTM_TIM4_IN4_3			**Mux input channel 4 of TIM module 4**
	GTM_TIM3_IN5_12			**Mux input channel 5 of TIM module 3**
	GTM_TIM0_IN7_7			**Mux input channel 0 of TIM module 0**
	SENT_SENT22B			**Receive input channel 22**
	EVADC_G9CH15	AI		**Analog input channel 15, group 9**
	P02.11	O0		**General-purpose output**
	GTM_TOUT118	O1		**GTM muxed output**
	—	O2		**Reserved**
	ASCLIN8_ASLSO	O3		**Slave select signal output**
	—	O4		**Reserved**
	—	O5		**Reserved**
	—	O6		**Reserved**
	—	O7		**Reserved**
F2	P02.12	I	SLOW / PU1 / VEXT / ES	**General-purpose input**
	GTM_TIM5_IN0_3			**Mux input channel 0 of TIM module 5**
	GTM_TIM4_IN0_3			**Mux input channel 0 of TIM module 4**
	GTM_TIM3_IN6_12			**Mux input channel 6 of TIM module 3**
	EDSADC_DSDIN12A			**Digital datastream input**
	EDSADC_ITR12F			**Trigger/Gate input**
	SENT_SENT23B			**Receive input channel 23**
	P02.12	O0		**General-purpose output**
	GTM_TOUT151	O1		**GTM muxed output**
	QSPI3_SLSO5	O2		**Master slave select output**
	QSPI4_SLSO4	O3		**Master slave select output**
	ASCLIN6_ASLSO	O4		**Slave select signal output**
	—	O5		**Reserved**
	—	O6		**Reserved**
	—	O7		**Reserved**

Downloaded by IFXDMZ|par-zengzhe 12/02/2019 11:04:31

Table 2-3 Port 02 Functions (cont'd)

Ball	Symbol	Ctrl.	Buffer Type	Function
F1	P02.13	I	SLOW / PU1 / VEXT / ES	**General-purpose input**
	GTM_TIM5_IN2_2			**Mux input channel 2 of TIM module 5**
	GTM_TIM4_IN2_3			**Mux input channel 2 of TIM module 4**
	GTM_TIM3_IN7_11			**Mux input channel 7 of TIM module 3**
	EDSADC_DSCIN12A			**Modulator clock input**
	EDSADC_ITR12E			**Trigger/Gate input**
	SENT_SENT24B			**Receive input channel 24**
	P02.13	O0		**General-purpose output**
	GTM_TOUT153	O1		**GTM muxed output**
	QSPI3_SLSO7	O2		**Master slave select output**
	QSPI4_SLSO6	O3		**Master slave select output**
	CAN00_TXD	O4		**CAN transmit output node 0**
	IOM_MON2_5			**Monitor input 2**
	IOM_REF2_5			**Reference input 2**
	CAN20_TXD	O5		**CAN transmit output node 0**
	—	O6		**Reserved**
	EDSADC_DSCOUT12	O7		**Modulator clock output**
G2	P02.14	I	SLOW / PU1 / VEXT / ES	**General-purpose input**
	GTM_TIM5_IN3_3			**Mux input channel 3 of TIM module 5**
	GTM_TIM4_IN3_3			**Mux input channel 3 of TIM module 4**
	GTM_TIM2_IN4_14			**Mux input channel 4 of TIM module 2**
	CAN20_RXDD			**CAN receive input node 0**
	CAN00_RXDH			**CAN receive input node 0**
	EDSADC_DSDIN13A			**Digital datastream input**
	EDSADC_ITR13F			**Trigger/Gate input**
	P02.14	O0		**General-purpose output**
	GTM_TOUT154	O1		**GTM muxed output**
	ASCLIN6_ASCLK	O2		**Shift clock output**
	—	O3		**Reserved**
	—	O4		**Reserved**
	—	O5		**Reserved**
	—	O6		**Reserved**
	—	O7		**Reserved**

Downloaded by IFXDMZlpar-zengzhe 12/02/2019 11:04:31

Table 2-3 Port 02 Functions (cont'd)

Ball	Symbol	Ctrl.	Buffer Type	Function
G1	P02.15	I	FAST / PU1 / VEXT / ES	**General-purpose input**
	GTM_TIM5_IN1_3			**Mux input channel 1 of TIM module 5**
	GTM_TIM4_IN1_3			**Mux input channel 1 of TIM module 4**
	GTM_TIM2_IN5_14			**Mux input channel 5 of TIM module 2**
	EDSADC_DSCIN13A			**Modulator clock input**
	EDSADC_ITR13E			**Trigger/Gate input**
	P02.15	O0		**General-purpose output**
	GTM_TOUT152	O1		**GTM muxed output**
	QSPI3_SLSO6	O2		**Master slave select output**
	QSPI4_SLSO5	O3		**Master slave select output**
	ASCLIN6_ATX	O4		**Transmit output**
	—	O5		**Reserved**
	ERAY1_TXENB	O6		**Transmit Enable Channel B**
	EDSADC_DSCOUT13	O7		**Modulator clock output**

Table 2-4 Port 10 Functions

Ball	Symbol	Ctrl.	Buffer Type	Function
F12	P10.0	I	SLOW / PU1 / VEXT / ES	**General-purpose input**
	GTM_TIM4_IN0_12			**Mux input channel 0 of TIM module 4**
	GTM_TIM1_IN4_2			**Mux input channel 4 of TIM module 1**
	GTM_TIM0_IN4_2			**Mux input channel 4 of TIM module 0**
	GPT120_T6EUDB			**Count direction control input of core timer T6**
	ASCLIN11_ARXA			**Receive input**
	GETH_RXERC			**Receive Error MII**
	GTM_DTMA5_2			**CDTM5_DTM4**
	P10.0	O0		**General-purpose output**
	GTM_TOUT102	O1		**GTM muxed output**
	ASCLIN11_ATX	O2		**Transmit output**
	QSPI1_SLSO10	O3		**Master slave select output**
	—	O4		**Reserved**
	EVADC_FC6BFLOUT	O5		**Boundary flag output, FC channel 6**
	—	O6		**Reserved**
	—	O7		**Reserved**

Downloaded by IFXDMZlpar-zengzhe 12/02/2019 11:04:31

Table 2-4 Port 10 Functions (cont'd)

Ball	Symbol	Ctrl.	Buffer Type	Function
G12	P10.1	I	FAST / PU1 / VEXT / ES	**General-purpose input**
	GTM_TIM4_IN4_12			**Mux input channel 4 of TIM module 4**
	GTM_TIM1_IN1_3			**Mux input channel 1 of TIM module 1**
	GTM_TIM0_IN1_3			**Mux input channel 1 of TIM module 0**
	GPT120_T5EUDB			**Count direction control input of timer T5**
	QSPI1_MRSTA			**Master SPI data input**
	GTM_DTMT0_1			**CDTM0_DTM0**
	P10.1	O0		**General-purpose output**
	GTM_TOUT103	O1		**GTM muxed output**
	QSPI1_MTSR	O2		**Master SPI data output**
	QSPI1_MRST	O3		**Slave SPI data output**
	IOM_MON2_1			**Monitor input 2**
	IOM_REF2_1			**Reference input 2**
	MSC0_EN1	O4		**Chip Select**
	EVADC_FC1BFLOUT	O5		**Boundary flag output, FC channel 1**
	—	O6		**Reserved**
	—	O7		**Reserved**
F10	P10.2	I	FAST / PU1 / VEXT / ES	**General-purpose input**
	GTM_TIM4_IN5_12			**Mux input channel 5 of TIM module 4**
	GTM_TIM1_IN2_3			**Mux input channel 2 of TIM module 1**
	GTM_TIM0_IN2_3			**Mux input channel 2 of TIM module 0**
	CAN02_RXDE			**CAN receive input node 2**
	MSC0_SDI1			**Upstream assynchronous input signal**
	QSPI1_SCLKA			**Slave SPI clock inputs**
	GPT120_T6INB			**Trigger/gate input of core timer T6**
	SCU_E_REQ2_0			**ERU Channel 2 inputs 0 to 5 (0 is the LSB and 5 is the MSB)**
	GTM_DTMT2_2			**CDTM2_DTM0**
	P10.2	O0		**General-purpose output**
	GTM_TOUT104	O1		**GTM muxed output**
	IOM_MON2_9			**Monitor input 2**
	—	O2		**Reserved**
	QSPI1_SCLK	O3		**Master SPI clock output**
	MSC0_EN0	O4		**Chip Select**
	EVADC_FC3BFLOUT	O5		**Boundary flag output, FC channel 3**
	—	O6		**Reserved**
	—	O7		**Reserved**

Downloaded by IFXDMZlpar-zengzhe 12/02/2019 11:04:31

Table 2-4 Port 10 Functions (cont'd)

Ball	Symbol	Ctrl.	Buffer Type	Function
F11	P10.3	I	FAST / PU1 / VEXT / ES	**General-purpose input**
	GTM_TIM4_IN6_10			**Mux input channel 6 of TIM module 4**
	GTM_TIM1_IN3_3			**Mux input channel 3 of TIM module 1**
	GTM_TIM0_IN3_3			**Mux input channel 3 of TIM module 0**
	QSPI1_MTSRA			**Save SPI data input**
	SCU_E_REQ3_0			**ERU Channel 3 inputs 0 to 5 (0 is the LSB and 5 is the MSB)**
	GPT120_T5INB			**Trigger/gate input of timer T5**
	P10.3	O0		**General-purpose output**
	GTM_TOUT105	O1		**GTM muxed output**
	IOM_MON2_10			**Monitor input 2**
	—	O2		**Reserved**
	QSPI1_MTSR	O3		**Master SPI data output**
	MSC0_EN0	O4		**Chip Select**
	—	O5		**Reserved**
	CAN02_TXD	O6		**CAN transmit output node 2**
	IOM_MON2_7			**Monitor input 2**
	IOM_REF2_7			**Reference input 2**
	—	O7		**Reserved**
G11	P10.4	I	FAST / PU1 / VEXT / ES	**General-purpose input**
	GTM_TIM4_IN7_3			**Mux input channel 7 of TIM module 4**
	GTM_TIM1_IN6_2			**Mux input channel 6 of TIM module 1**
	GTM_TIM0_IN6_2			**Mux input channel 6 of TIM module 0**
	QSPI1_MTSRC			**Save SPI data input**
	CCU60_CCPOS0C			**Hall capture input 0**
	GPT120_T3INB			**Trigger/gate input of core timer T3**
	ASCLIN11_ARXB			**Receive input**
	P10.4	O0		**General-purpose output**
	GTM_TOUT106	O1		**GTM muxed output**
	IOM_MON2_11			**Monitor input 2**
	—	O2		**Reserved**
	QSPI1_SLSO8	O3		**Master slave select output**
	QSPI1_MTSR	O4		**Master SPI data output**
	MSC0_EN0	O5		**Chip Select**
	—	O6		**Reserved**
	—	O7		**Reserved**

Downloaded by IFXDMZ|par-zengzhe 12/02/2019 11:04:31

Table 2-4 Port 10 Functions (cont'd)

Ball	Symbol	Ctrl.	Buffer Type	Function
G10	P10.5	I	SLOW / PU2 / VEXT / ES	**General-purpose input**
	GTM_TIM4_IN3_13			**Mux input channel 3 of TIM module 4**
	GTM_TIM1_IN2_4			**Mux input channel 2 of TIM module 1**
	GTM_TIM0_IN2_4			**Mux input channel 2 of TIM module 0**
	SCU_PD_HWCFG4			**Hardware configuration pin 4**
	CAN20_RXDA			**CAN receive input node 0**
	MSC0_INJ1			**Injection signal from port**
	P10.5	O0		**General-purpose output**
	GTM_TOUT107	O1		**GTM muxed output**
	IOM_REF2_9			**Reference input 2**
	ASCLIN2_ATX	O2		**Transmit output**
	IOM_MON2_14			**Monitor input 2**
	IOM_REF2_14			**Reference input 2**
	QSPI3_SLSO8	O3		**Master slave select output**
	QSPI1_SLSO9	O4		**Master slave select output**
	GPT120_T6OUT	O5		**External output for overflow/underflow detection of core timer T6**
	ASCLIN2_ASLSO	O6		**Slave select signal output**
	PSI5_TX3	O7		**TXD outputs (send data)**

Downloaded by IFXDMZ|par-zengzhe 12/02/2019 11:04:31

Table 2-4 Port 10 Functions (cont'd)

Ball	Symbol	Ctrl.	Buffer Type	Function
F9	P10.6	I	SLOW / PU2 / VEXT / ES	**General-purpose input**
	GTM_TIM4_IN2_13			**Mux input channel 2 of TIM module 4**
	GTM_TIM1_IN3_4			**Mux input channel 3 of TIM module 1**
	GTM_TIM0_IN3_4			**Mux input channel 3 of TIM module 0**
	PSI5_RX3C			**RXD inputs (receive data) channel 3**
	ASCLIN2_ARXD			**Receive input**
	QSPI3_MTSRB			**Save SPI data input**
	SCU_PD_HWCFG5			**Hardware configuration pin 5**
	P10.6	O0		**General-purpose output**
	GTM_TOUT108	O1		**GTM muxed output**
	IOM_REF2_10			**Reference input 2**
	ASCLIN2_ASCLK	O2		**Shift clock output**
	QSPI3_MTSR	O3		**Master SPI data output**
	GPT120_T3OUT	O4		**External output for overflow/underflow detection of core timer T3**
	CAN20_TXD	O5		**CAN transmit output node 0**
	QSPI1_MRST	O6		**Slave SPI data output**
	IOM_MON2_1			**Monitor input 2**
	IOM_REF2_1			**Reference input 2**
	EVADC_FC7BFLOUT	O7		**Boundary flag output, FC channel 7**

Downloaded by IFXDMZlpar-zengzhe 12/02/2019 11:04:31

Table 2-4 Port 10 Functions (cont'd)

Ball	Symbol	Ctrl.	Buffer Type	Function
F8	P10.7	I	SLOW / PU1 / VEXT / ES	**General-purpose input**
	GTM_TIM1_IN0_3			**Mux input channel 0 of TIM module 1**
	GTM_TIM0_IN0_3			**Mux input channel 0 of TIM module 0**
	GPT120_T3EUDB			**Count direction control input of core timer T3**
	ASCLIN2_ACTSA			**Clear to send input**
	QSPI3_MRSTB			**Master SPI data input**
	SCU_E_REQ0_2			**ERU Channel 0 inputs 0 to 5 (0 is the LSB and 5 is the MSB)**
	CCU60_CCPOS1C			**Hall capture input 1**
	P10.7	O0		**General-purpose output**
	GTM_TOUT109	O1		**GTM muxed output**
	IOM_REF2_11			**Reference input 2**
	—	O2		**Reserved**
	QSPI3_MRST	O3		**Slave SPI data output**
	IOM_MON2_3			**Monitor input 2**
	IOM_REF2_3			**Reference input 2**
	—	O4		**Reserved**
	CAN20_TXD	O5		**CAN transmit output node 0**
	CAN12_TXD	O6		**CAN transmit output node 2**
	—	O7		**Reserved**

Downloaded by IFXDMZlpar-zengzhe 12/02/2019 11:04:31

Table 2-4 Port 10 Functions (cont'd)

Ball	Symbol	Ctrl.	Buffer Type	Function
G9	P10.8	I	SLOW / PU1 / VEXT / ES	**General-purpose input**
	GTM_TIM4_IN0_13			**Mux input channel 0 of TIM module 4**
	GTM_TIM1_IN5_2			**Mux input channel 5 of TIM module 1**
	GTM_TIM0_IN5_2			**Mux input channel 5 of TIM module 0**
	CAN12_RXDB			**CAN receive input node 2**
	GPT120_T4INB			**Trigger/gate input of timer T4**
	QSPI3_SCLKB			**Slave SPI clock inputs**
	SCU_E_REQ1_2			**ERU Channel 1 inputs 0 to 5 (0 is the LSB and 5 is the MSB)**
	CCU60_CCPOS2C			**Hall capture input 2**
	CAN20_RXDB			**CAN receive input node 0**
	RIF1_RAMP1B			**External RAMP B input**
	P10.8	O0		**General-purpose output**
	GTM_TOUT110	O1		**GTM muxed output**
	ASCLIN2_ARTS	O2		**Ready to send output**
	QSPI3_SCLK	O3		**Master SPI clock output**
	—	O4		**Reserved**
	—	O5		**Reserved**
	—	O6		**Reserved**
	—	O7		**Reserved**
B8	P10.9	I	SLOW / PU1 / VEXT / ES	**General-purpose input**
	GTM_TIM6_IN0_5			**Mux input channel 0 of TIM module 6**
	GTM_TIM4_IN1_4			**Mux input channel 1 of TIM module 4**
	GTM_TIM0_IN1_10			**Mux input channel 1 of TIM module 0**
	SENT_SENT15C			**Receive input channel 15**
	ASCLIN6_ARXD			**Receive input**
	P10.9	O0		**General-purpose output**
	GTM_TOUT265	O1		**GTM muxed output**
	—	O2		**Reserved**
	—	O3		**Reserved**
	—	O4		**Reserved**
	—	O5		**Reserved**
	—	O6		**Reserved**
	—	O7		**Reserved**

Downloaded by IFXDMZ|par-zengzhe 12/02/2019 11:04:31

Table 2-4 Port 10 Functions (cont'd)

Ball	Symbol	Ctrl.	Buffer Type	Function
B7	P10.10	I	SLOW / PU1 / VEXT / ES	**General-purpose input**
	GTM_TIM6_IN1_5			**Mux input channel 1 of TIM module 6**
	GTM_TIM4_IN2_4			**Mux input channel 2 of TIM module 4**
	GTM_TIM0_IN2_11			**Mux input channel 2 of TIM module 0**
	SENT_SENT16C			**Receive input channel 16**
	P10.10	O0		**General-purpose output**
	GTM_TOUT266	O1		**GTM muxed output**
	ASCLIN6_ATX	O2		**Transmit output**
	—	O3		**Reserved**
	—	O4		**Reserved**
	—	O5		**Reserved**
	—	O6		**Reserved**
	—	O7		**Reserved**
A7	P10.11	I	SLOW / PU1 / VEXT / ES	**General-purpose input**
	GTM_TIM6_IN2_5			**Mux input channel 2 of TIM module 6**
	GTM_TIM4_IN5_4			**Mux input channel 5 of TIM module 4**
	GTM_TIM0_IN5_9			**Mux input channel 5 of TIM module 0**
	SENT_SENT19C			**Receive input channel 19**
	P10.11	O0		**General-purpose output**
	GTM_TOUT269	O1		**GTM muxed output**
	ASCLIN6_ASCLK	O2		**Shift clock output**
	—	O3		**Reserved**
	—	O4		**Reserved**
	—	O5		**Reserved**
	—	O6		**Reserved**
	—	O7		**Reserved**

Downloaded by IFXDMZlpar-zengzhe 12/02/2019 11:04:31

Table 2-4 Port 10 Functions (cont'd)

Ball	Symbol	Ctrl.	Buffer Type	Function
A6	P10.13	I	SLOW / PU1 / VEXT / ES	**General-purpose input**
	GTM_TIM6_IN3_5			**Mux input channel 3 of TIM module 6**
	GTM_TIM4_IN4_4			**Mux input channel 4 of TIM module 4**
	GTM_TIM0_IN4_9			**Mux input channel 4 of TIM module 0**
	SENT_SENT18C			**Receive input channel 18**
	P10.13	O0		**General-purpose output**
	GTM_TOUT268	O1		**GTM muxed output**
	ASCLIN6_ASLSO	O2		**Slave select signal output**
	—	O3		**Reserved**
	—	O4		**Reserved**
	—	O5		**Reserved**
	—	O6		**Reserved**
	—	O7		**Reserved**
B5	P10.14	I	SLOW / PU1 / VEXT / ES	**General-purpose input**
	GTM_TIM7_IN0_4			**Mux input channel 0 of TIM module 7**
	GTM_TIM4_IN3_4			**Mux input channel 3 of TIM module 4**
	GTM_TIM0_IN3_11			**Mux input channel 3 of TIM module 0**
	SENT_SENT17C			**Receive input channel 17**
	P10.14	O0		**General-purpose output**
	GTM_TOUT267	O1		**GTM muxed output**
	—	O2		**Reserved**
	—	O3		**Reserved**
	—	O4		**Reserved**
	—	O5		**Reserved**
	—	O6		**Reserved**
	—	O7		**Reserved**
A5	P10.15	I	SLOW / PU1 / VEXT / ES	**General-purpose input**
	GTM_TIM7_IN1_4			**Mux input channel 1 of TIM module 7**
	GTM_TIM4_IN6_4			**Mux input channel 6 of TIM module 4**
	GTM_TIM0_IN6_9			**Mux input channel 6 of TIM module 0**
	P10.15	O0		**General-purpose output**
	GTM_TOUT270	O1		**GTM muxed output**
	—	O2		**Reserved**
	—	O3		**Reserved**
	—	O4		**Reserved**
	—	O5		**Reserved**
	—	O6		**Reserved**
	—	O7		**Reserved**

Downloaded by IFXDMZ|par-zengzhe 12/02/2019 11:04:31

Table 2-5 Port 11 Functions

Ball	Symbol	Ctrl.	Buffer Type	Function
K15	P11.0	I	RFAST / PU1 / VFLEX / ES	**General-purpose input**
	GTM_TIM7_IN5_1			**Mux input channel 5 of TIM module 7**
	GTM_TIM4_IN0_4			**Mux input channel 0 of TIM module 4**
	GTM_TIM2_IN0_7			**Mux input channel 0 of TIM module 2**
	ASCLIN3_ARXB			**Receive input**
	GTM_DTMA2_1			**CDTM2_DTM4**
	P11.0	O0		**General-purpose output**
	GTM_TOUT119	O1		**GTM muxed output**
	ASCLIN3_ATX	O2		**Transmit output**
	IOM_MON2_15			**Monitor input 2**
	IOM_REF2_15			**Reference input 2**
	—	O3		**Reserved**
	—	O4		**Reserved**
	CAN11_TXD	O5		**CAN transmit output node 1**
	GETH_TXD3	O6		**Transmit Data**
	—	O7		**Reserved**
K14	P11.1	I	RFAST / PU1 / VFLEX / ES	**General-purpose input**
	GTM_TIM7_IN6_1			**Mux input channel 6 of TIM module 7**
	GTM_TIM4_IN1_5			**Mux input channel 1 of TIM module 4**
	GTM_TIM2_IN1_6			**Mux input channel 1 of TIM module 2**
	P11.1	O0		**General-purpose output**
	GTM_TOUT120	O1		**GTM muxed output**
	ASCLIN3_ASCLK	O2		**Shift clock output**
	ASCLIN3_ATX	O3		**Transmit output**
	IOM_MON2_15			**Monitor input 2**
	IOM_REF2_15			**Reference input 2**
	—	O4		**Reserved**
	CAN12_TXD	O5		**CAN transmit output node 2**
	GETH_TXD2	O6		**Transmit Data**
	—	O7		**Reserved**

Downloaded by IFXDMZ|par-zengzhe 12/02/2019 11:04:31

Table 2-5 Port 11 Functions (cont'd)

Ball	Symbol	Ctrl.	Buffer Type	Function
F15	P11.2	I	RFAST / PU1 / VFLEX / ES	**General-purpose input**
	GTM_TIM3_IN1_3			**Mux input channel 1 of TIM module 3**
	GTM_TIM2_IN1_3			**Mux input channel 1 of TIM module 2**
	P11.2	O0		**General-purpose output**
	GTM_TOUT95	O1		**GTM muxed output**
	—	O2		**Reserved**
	QSPI0_SLSO5	O3		**Master slave select output**
	QSPI1_SLSO5	O4		**Master slave select output**
	MSC0_EN1	O5		**Chip Select**
	GETH_TXD1	O6		**Transmit Data**
	CCU60_COUT63	O7		**T13 PWM channel 63**
	IOM_MON1_6			**Monitor input 1**
	IOM_REF1_0			**Reference input 1**
G15	P11.3	I	RFAST / PU1 / VFLEX / ES	**General-purpose input**
	GTM_TIM3_IN2_2			**Mux input channel 2 of TIM module 3**
	GTM_TIM2_IN2_2			**Mux input channel 2 of TIM module 2**
	MSC0_SDI3			**Upstream assynchronous input signal**
	QSPI1_MRSTB			**Master SPI data input**
	P11.3	O0		**General-purpose output**
	GTM_TOUT96	O1		**GTM muxed output**
	—	O2		**Reserved**
	QSPI1_MRST	O3		**Slave SPI data output**
	IOM_MON2_1			**Monitor input 2**
	IOM_REF2_1			**Reference input 2**
	ERAY0_TXDA	O4		**Transmit Channel A**
	—	O5		**Reserved**
	GETH_TXD0	O6		**Transmit Data**
	CCU60_COUT62	O7		**T12 PWM channel 62**
	IOM_MON1_5			**Monitor input 1**
	IOM_REF1_1			**Reference input 1**

Downloaded by IFXDMZ|par-zengzhe 12/02/2019 11:04:31

Table 2-5 Port 11 Functions (cont'd)

Ball	Symbol	Ctrl.	Buffer Type	Function
J15	P11.4	I	RFAST / PU1 / VFLEX / ES	**General-purpose input**
	GTM_TIM7_IN7_1			**Mux input channel 7 of TIM module 7**
	GTM_TIM4_IN2_5			**Mux input channel 2 of TIM module 4**
	GTM_TIM2_IN2_6			**Mux input channel 2 of TIM module 2**
	GETH_RXCLKB			**Receive Clock MII and RGMII (RGMII can use RXCLKA only)**
	P11.4	O0		**General-purpose output**
	GTM_TOUT121	O1		**GTM muxed output**
	ASCLIN3_ASCLK	O2		**Shift clock output**
	—	O3		**Reserved**
	—	O4		**Reserved**
	CAN13_TXD	O5		**CAN transmit output node 3**
	GETH_TXER	O6		**Transmit Error MII**
	GETH_TXCLK	O7		**Transmit Clock Output for RGMII**
J13	P11.5	I	SLOW / PU1 / VFLEX / ES	**General-purpose input**
	GTM_TIM4_IN3_5			**Mux input channel 3 of TIM module 4**
	GTM_TIM2_IN3_8			**Mux input channel 3 of TIM module 2**
	GETH_TXCLKA			**Transmit Clock Input for MII**
	GETH_GREFCLK			**Gigabit Reference Clock input for RGMII (125 MHz high precission)**
	P11.5	O0		**General-purpose output**
	GTM_TOUT122	O1		**GTM muxed output**
	—	O2		**Reserved**
	—	O3		**Reserved**
	—	O4		**Reserved**
	CAN20_TXD	O5		**CAN transmit output node 0**
	—	O6		**Reserved**
	—	O7		**Reserved**

Downloaded by IFXDMZ|par-zengzhe 12/02/2019 11:04:31

Table 2-5 Port 11 Functions (cont'd)

Ball	Symbol	Ctrl.	Buffer Type	Function
J14	P11.6	I	RFAST / PU1 / VFLEX / ES	**General-purpose input**
	GTM_TIM3_IN3_2			**Mux input channel 3 of TIM module 3**
	GTM_TIM2_IN3_2			**Mux input channel 3 of TIM module 2**
	QSPI1_SCLKB			**Slave SPI clock inputs**
	P11.6	O0		**General-purpose output**
	GTM_TOUT97	O1		**GTM muxed output**
	ERAY0_TXENB	O2		**Transmit Enable Channel B**
	QSPI1_SCLK	O3		**Master SPI clock output**
	ERAY0_TXENA	O4		**Transmit Enable Channel A**
	MSC0_FCLP	O5		**Shift-clock direct part of the differential signal**
	GETH_TXEN	O6		**Transmit Enable MII and RMII**
	GETH_TCTL			**Transmit Control for RGMII**
	CCU60_COUT61	O7		**T12 PWM channel 61**
	IOM_MON1_4			**Monitor input 1**
	IOM_REF1_2			**Reference input 1**
K13	P11.7	I	SLOW / PU1 / VFLEX / ES	**General-purpose input**
	GTM_TIM4_IN4_5			**Mux input channel 4 of TIM module 4**
	GTM_TIM2_IN4_7			**Mux input channel 4 of TIM module 2**
	GETH_RXD3A			**Receive Data 3 MII and RGMII (RGMII can use RXD3A only)**
	CAN11_RXDD			**CAN receive input node 1**
	P11.7	O0		**General-purpose output**
	GTM_TOUT123	O1		**GTM muxed output**
	—	O2		**Reserved**
	—	O3		**Reserved**
	—	O4		**Reserved**
	—	O5		**Reserved**
	—	O6		**Reserved**
	—	O7		**Reserved**

Downloaded by IFXDMZlpar-zengzhe 12/02/2019 11:04:31

Table 2-5 Port 11 Functions (cont'd)

Ball	Symbol	Ctrl.	Buffer Type	Function
K12	P11.8	I	SLOW / PU1 / VFLEX / ES	**General-purpose input**
	GTM_TIM4_IN5_5			**Mux input channel 5 of TIM module 4**
	GTM_TIM2_IN5_8			**Mux input channel 5 of TIM module 2**
	GETH_RXD2A			**Receive Data 2 MII and RGMII (RGMII can use RXD2A only)**
	CAN12_RXDD			**CAN receive input node 2**
	P11.8	O0		**General-purpose output**
	GTM_TOUT124	O1		**GTM muxed output**
	—	O2		**Reserved**
	—	O3		**Reserved**
	—	O4		**Reserved**
	—	O5		**Reserved**
	—	O6		**Reserved**
	—	O7		**Reserved**
F14	P11.9	I	FAST / PU1 / VFLEX / ES	**General-purpose input**
	GTM_TIM3_IN4_2			**Mux input channel 4 of TIM module 3**
	GTM_TIM2_IN4_2			**Mux input channel 4 of TIM module 2**
	QSPI1_MTSRB			**Save SPI data input**
	ERAY0_RXDA1			**Receive Channel A1**
	GETH_RXD1A			**Receive Data 1 MII, RMII and RGMII (RGMII can use RXD1A only)**
	P11.9	O0		**General-purpose output**
	GTM_TOUT98	O1		**GTM muxed output**
	—	O2		**Reserved**
	QSPI1_MTSR	O3		**Master SPI data output**
	—	O4		**Reserved**
	MSC0_SOP	O5		**Data output - direct part of the differential signal**
	—	O6		**Reserved**
	CCU60_COUT60	O7		**T12 PWM channel 60**
	IOM_MON1_3			**Monitor input 1**
	IOM_REF1_3			**Reference input 1**

Downloaded by IFXDMZlpar-zengzhe 12/02/2019 11:04:31

Table 2-5 Port 11 Functions (cont'd)

Ball	Symbol	Ctrl.	Buffer Type	Function
G14	P11.10	I	FAST / PU1 / VFLEX / ES	**General-purpose input**
	GTM_TIM3_IN5_2			**Mux input channel 5 of TIM module 3**
	GTM_TIM2_IN5_2			**Mux input channel 5 of TIM module 2**
	GTM_TIM2_IN0_9			**Mux input channel 0 of TIM module 2**
	CAN03_RXDD			**CAN receive input node 3**
	ERAY0_RXDB1			**Receive Channel B1**
	ASCLIN1_ARXE			**Receive input**
	SCU_E_REQ6_3			**ERU Channel 6 inputs 0 to 5 (0 is the LSB and 5 is the MSB)**
	MSC0_SDI0			**Upstream assynchronous input signal**
	GETH_RXD0A			**Receive Data 0 MII, RMII and RGMII (RGMII can use RXD0A only)**
	QSPI1_SLSIA			**Slave select input**
	P11.10	O0		**General-purpose output**
	GTM_TOUT99	O1		**GTM muxed output**
	—	O2		**Reserved**
	QSPI0_SLSO3	O3		**Master slave select output**
	QSPI1_SLSO3	O4		**Master slave select output**
	—	O5		**Reserved**
	—	O6		**Reserved**
	CCU60_CC62	O7		**T12 PWM channel 62**
	IOM_MON1_0			**Monitor input 1**
	IOM_REF1_4			**Reference input 1**

Downloaded by IFXDMZlpar-zengzhe 12/02/2019 11:04:31

Table 2-5 Port 11 Functions (cont'd)

Ball	Symbol	Ctrl.	Buffer Type	Function
F13	P11.11	I	FAST / PU1 / VFLEX / ES	**General-purpose input**
	GTM_TIM3_IN6_2			**Mux input channel 6 of TIM module 3**
	GTM_TIM3_IN0_14			**Mux input channel 0 of TIM module 3**
	GTM_TIM2_IN6_2			**Mux input channel 6 of TIM module 2**
	GETH_CRSDVA			**Carrier Sense / Data Valid combi-signal for RMII**
	GETH_RXDVA			**Receive Data Valid MII**
	GETH_CRSB			**Carrier Sense MII**
	GETH_RCTLA			**Receive Control for RGMII**
	P11.11	O0		**General-purpose output**
	GTM_TOUT100	O1		**GTM muxed output**
	—	O2		**Reserved**
	QSPI0_SLSO4	O3		**Master slave select output**
	QSPI1_SLSO4	O4		**Master slave select output**
	MSC0_EN0	O5		**Chip Select**
	ERAY0_TXENB	O6		**Transmit Enable Channel B**
	CCU60_CC61	O7		**T12 PWM channel 61**
	IOM_MON1_1			**Monitor input 1**
	IOM_REF1_5			**Reference input 1**

Downloaded by IFXDMZ|par-zengzhe 12/02/2019 11:04:31

Table 2-5 Port 11 Functions (cont'd)

Ball	Symbol	Ctrl.	Buffer Type	Function
G13	P11.12	I	FAST / PU1 / VFLEX / ES	**General-purpose input**
	GTM_TIM3_IN7_2			**Mux input channel 7 of TIM module 3**
	GTM_TIM2_IN7_2			**Mux input channel 7 of TIM module 2**
	GETH_REFCLKA			**Reference Clock input for RMII (50 MHz)**
	GETH_TXCLKB			**Transmit Clock Input for MII**
	GETH_RXCLKA			**Receive Clock MII and RGMII (RGMII can use RXCLKA only)**
	P11.12	O0		**General-purpose output**
	GTM_TOUT101	O1		**GTM muxed output**
	ASCLIN1_ATX	O2		**Transmit output**
	IOM_MON2_13			**Monitor input 2**
	IOM_REF2_13			**Reference input 2**
	GTM_CLK2	O3		**CGM generated clock**
	ERAY0_TXDB	O4		**Transmit Channel B**
	CAN03_TXD	O5		**CAN transmit output node 3**
	IOM_MON2_8			**Monitor input 2**
	IOM_REF2_8			**Reference input 2**
	CCU_EXTCLK1	O6		**CCU external clock**
	CCU60_CC60	O7		**T12 PWM channel 60**
	IOM_MON1_2			**Monitor input 1**
	IOM_REF1_6			**Reference input 1**
K11	P11.13	I	SLOW / PU1 / VFLEX / ES	**General-purpose input**
	GTM_TIM4_IN6_5			**Mux input channel 6 of TIM module 4**
	GTM_TIM2_IN6_7			**Mux input channel 6 of TIM module 2**
	GETH_RXERA			**Receive Error MII**
	I2C1_SDAA			**Serial Data Input**
	CAN13_RXDD			**CAN receive input node 3**
	P11.13	O0		**General-purpose output**
	GTM_TOUT125	O1		**GTM muxed output**
	—	O2		**Reserved**
	—	O3		**Reserved**
	—	O4		**Reserved**
	—	O5		**Reserved**
	I2C1_SDA	O6		**Serial Data Output**
	—	O7		**Reserved**

Downloaded by IFXDMZ|par-zengzhe 12/02/2019 11:04:31

Table 2-5 Port 11 Functions (cont'd)

Ball	Symbol	Ctrl.	Buffer Type	Function
J12	P11.14	I	SLOW / PU1 / VFLEX / ES	**General-purpose input**
	GTM_TIM4_IN7_4			**Mux input channel 7 of TIM module 4**
	GTM_TIM2_IN7_8			**Mux input channel 7 of TIM module 2**
	GETH_CRSDVB			**Carrier Sense / Data Valid combi-signal for RMII**
	GETH_RXDVB			**Receive Data Valid MII**
	GETH_CRSA			**Carrier Sense MII**
	I2C1_SCLA			**Serial Clock Input**
	CAN20_RXDF			**CAN receive input node 0**
	P11.14	O0		**General-purpose output**
	GTM_TOUT126	O1		**GTM muxed output**
	—	O2		**Reserved**
	—	O3		**Reserved**
	—	O4		**Reserved**
	—	O5		**Reserved**
	I2C1_SCL	O6		**Serial Clock Output**
	—	O7		**Reserved**
J11	P11.15	I	SLOW / PU1 / VFLEX / ES	**General-purpose input**
	GTM_TIM4_IN7_5			**Mux input channel 7 of TIM module 4**
	GTM_TIM0_IN7_8			**Mux input channel 0 of TIM module 0**
	GETH_COLA			**Collision MII**
	P11.15	O0		**General-purpose output**
	GTM_TOUT127	O1		**GTM muxed output**
	—	O2		**Reserved**
	—	O3		**Reserved**
	—	O4		**Reserved**
	—	O5		**Reserved**
	—	O6		**Reserved**
	—	O7		**Reserved**

Downloaded by IFXDMZ|par-zengzhe 12/02/2019 11:04:31

Table 2-6 Port 12 Functions

Ball	Symbol	Ctrl.	Buffer Type	Function
K17	P12.0	I	SLOW / PU1 / VFLEX / ES	**General-purpose input**
	GTM_TIM7_IN3_2			**Mux input channel 3 of TIM module 7**
	GTM_TIM4_IN0_5			**Mux input channel 0 of TIM module 4**
	GTM_TIM3_IN0_7			**Mux input channel 0 of TIM module 3**
	CAN00_RXDC			**CAN receive input node 0**
	GETH_RXCLKC			**Receive Clock MII and RGMII (RGMII can use RXCLKA only)**
	GTM_DTMA4_0			**CDTM4_DTM4**
	P12.0	O0		**General-purpose output**
	GTM_TOUT128	O1		**GTM muxed output**
	—	O2		**Reserved**
	—	O3		**Reserved**
	—	O4		**Reserved**
	—	O5		**Reserved**
	GETH_MDC	O6		**MDIO clock**
	—	O7		**Reserved**
K16	P12.1	I	SLOW / PU1 / VFLEX / ES	**General-purpose input**
	GTM_TIM7_IN4_1			**Mux input channel 4 of TIM module 7**
	GTM_TIM4_IN1_6			**Mux input channel 1 of TIM module 4**
	GTM_TIM3_IN1_6			**Mux input channel 1 of TIM module 3**
	GETH_MDIOC			**MDIO Input**
	P12.1	O0		**General-purpose output**
	GTM_TOUT129	O1		**GTM muxed output**
	ASCLIN3_ASLSO	O2		**Slave select signal output**
	—	O3		**Reserved**
	—	O4		**Reserved**
	CAN00_TXD	O5		**CAN transmit output node 0**
	IOM_MON2_5			**Monitor input 2**
	IOM_REF2_5			**Reference input 2**
	—	O6		**Reserved**
	—	O7		**Reserved**
	GETH_MDIO	O		**MDIO Output**

Downloaded by IFXDMZlpar-zengzhe 12/02/2019 11:04:31

Table 2-7 Port 13 Functions

Ball	Symbol	Ctrl.	Buffer Type	Function
G17	P13.0	I	LVDS_TX / FAST / PU1 / VEXT / ES6	**General-purpose input**
	GTM_TIM3_IN5_3			**Mux input channel 5 of TIM module 3**
	GTM_TIM2_IN5_3			**Mux input channel 5 of TIM module 2**
	ASCLIN10_ARXC			**Receive input**
	P13.0	O0		**General-purpose output**
	GTM_TOUT91	O1		**GTM muxed output**
	ASCLIN10_ATX	O2		**Transmit output**
	QSPI2_SCLKN	O3		**Master SPI clock output (LVDS N line)**
	MSC0_EN1	O4		**Chip Select**
	MSC0_FCLN	O5		**Shift-clock inverted part of the differential signal**
	—	O6		**Reserved**
	CAN10_TXD	O7		**CAN transmit output node 0**
F17	P13.1	I	LVDS_TX / FAST / PU1 / VEXT / ES6	**General-purpose input**
	GTM_TIM3_IN6_3			**Mux input channel 6 of TIM module 3**
	GTM_TIM2_IN6_3			**Mux input channel 6 of TIM module 2**
	I2C0_SCLB			**Serial Clock Input**
	CAN10_RXDD			**CAN receive input node 0**
	ASCLIN10_ARXD			**Receive input**
	P13.1	O0		**General-purpose output**
	GTM_TOUT92	O1		**GTM muxed output**
	—	O2		**Reserved**
	QSPI2_SCLKP	O3		**Master SPI clock output (LVDS P line)**
	—	O4		**Reserved**
	MSC0_FCLP	O5		**Shift-clock direct part of the differential signal**
	I2C0_SCL	O6		**Serial Clock Output**
	—	O7		**Reserved**

Downloaded by IFXDMZ|par-zengzhe 12/02/2019 11:04:31

Table 2-7 Port 13 Functions (cont'd)

Ball	Symbol	Ctrl.	Buffer Type	Function
G16	P13.2	I	LVDS_TX / FAST / PU1 / VEXT / ES6	**General-purpose input**
	GTM_TIM3_IN7_3			**Mux input channel 7 of TIM module 3**
	GTM_TIM2_IN7_3			**Mux input channel 7 of TIM module 2**
	GPT120_CAPINA			**Trigger input to capture value of timer T5 into CAPREL register**
	I2C0_SDAB			**Serial Data Input**
	P13.2	O0		**General-purpose output**
	GTM_TOUT93	O1		**GTM muxed output**
	ASCLIN10_ASCLK	O2		**Shift clock output**
	QSPI2_MTSRN	O3		**Master SPI data output (LVDS N line)**
	MSC0_FCLP	O4		**Shift-clock direct part of the differential signal**
	MSC0_SON	O5		**Data output - inverted part of the differential signal**
	I2C0_SDA	O6		**Serial Data Output**
	—	O7		**Reserved**
F16	P13.3	I	LVDS_TX / FAST / PU1 / VEXT / ES6	**General-purpose input**
	GTM_TIM3_IN0_3			**Mux input channel 0 of TIM module 3**
	GTM_TIM2_IN0_3			**Mux input channel 0 of TIM module 2**
	P13.3	O0		**General-purpose output**
	GTM_TOUT94	O1		**GTM muxed output**
	ASCLIN10_ASLSO	O2		**Slave select signal output**
	QSPI2_MTSRP	O3		**Master SPI data output (LVDS P line)**
	—	O4		**Reserved**
	MSC0_SOP	O5		**Data output - direct part of the differential signal**
	—	O6		**Reserved**
	—	O7		**Reserved**
B16	P13.4	I	LVDS_TX / FAST / PU1 / VEXT / ES6	**General-purpose input**
	GTM_TIM6_IN0_4			**Mux input channel 0 of TIM module 6**
	GTM_TIM5_IN3_4			**Mux input channel 3 of TIM module 5**
	GTM_TIM3_IN3_8			**Mux input channel 3 of TIM module 3**
	P13.4	O0		**General-purpose output**
	GTM_TOUT253	O1		**GTM muxed output**
	—	O2		**Reserved**
	—	O3		**Reserved**
	MSC2_EN0	O4		**Chip Select**
	MSC2_FCLN	O5		**Shift-clock inverted part of the differential signal**
	—	O6		**Reserved**
	CAN23_TXD	O7		**CAN transmit output node 3**

Downloaded by IFXDMZ|par-zengzhe 12/02/2019 11:04:31

Table 2-7 Port 13 Functions (cont'd)

Ball	Symbol	Ctrl.	Buffer Type	Function
A16	P13.5	I	LVDS_TX / FAST / PU1 / VEXT / ES6	**General-purpose input**
	GTM_TIM6_IN1_4			**Mux input channel 1 of TIM module 6**
	GTM_TIM5_IN4_4			**Mux input channel 4 of TIM module 5**
	GTM_TIM3_IN4_9			**Mux input channel 4 of TIM module 3**
	CAN23_RXDD			**CAN receive input node 3**
	P13.5	O0		**General-purpose output**
	GTM_TOUT254	O1		**GTM muxed output**
	—	O2		**Reserved**
	—	O3		**Reserved**
	—	O4		**Reserved**
	MSC2_FCLP	O5		**Shift-clock direct part of the differential signal**
	—	O6		**Reserved**
	—	O7		**Reserved**
B15	P13.6	I	LVDS_TX / FAST / PU1 / VEXT / ES6	**General-purpose input**
	GTM_TIM6_IN2_4			**Mux input channel 2 of TIM module 6**
	GTM_TIM5_IN5_4			**Mux input channel 5 of TIM module 5**
	GTM_TIM3_IN5_10			**Mux input channel 5 of TIM module 3**
	P13.6	O0		**General-purpose output**
	GTM_TOUT255	O1		**GTM muxed output**
	—	O2		**Reserved**
	—	O3		**Reserved**
	—	O4		**Reserved**
	MSC2_SON	O5		**Data output - inverted part of the differential signal**
	—	O6		**Reserved**
	—	O7		**Reserved**
A15	P13.7	I	LVDS_TX / FAST / PU1 / VEXT / ES6	**General-purpose input**
	GTM_TIM6_IN3_4			**Mux input channel 3 of TIM module 6**
	GTM_TIM5_IN6_4			**Mux input channel 6 of TIM module 5**
	GTM_TIM3_IN6_10			**Mux input channel 6 of TIM module 3**
	P13.7	O0		**General-purpose output**
	GTM_TOUT256	O1		**GTM muxed output**
	—	O2		**Reserved**
	—	O3		**Reserved**
	—	O4		**Reserved**
	MSC2_SOP	O5		**Data output - direct part of the differential signal**
	—	O6		**Reserved**
	—	O7		**Reserved**

Downloaded by IFXDMZ|par-zengzhe 12/02/2019 11:04:31

Table 2-7 Port 13 Functions (cont'd)

Ball	Symbol	Ctrl.	Buffer Type	Function
A14	P13.9	I	FAST / PU1 / VEXT / ES	**General-purpose input**
	GTM_TIM6_IN4_4			**Mux input channel 4 of TIM module 6**
	GTM_TIM4_IN7_6			**Mux input channel 7 of TIM module 4**
	GTM_TIM2_IN7_12			**Mux input channel 7 of TIM module 2**
	I2C1_SCLB			**Serial Clock Input**
	P13.9	O0		**General-purpose output**
	GTM_TOUT248	O1		**GTM muxed output**
	ASCLIN3_ATX	O2		**Transmit output**
	IOM_MON2_15			**Monitor input 2**
	IOM_REF2_15			**Reference input 2**
	QSPI5_SLSO5	O3		**Master slave select output**
	—	O4		**Reserved**
	CAN21_TXD	O5		**CAN transmit output node 1**
	I2C1_SCL	O6		**Serial Clock Output**
	—	O7		**Reserved**
B13	P13.10	I	SLOW / PU1 / VEXT / ES	**General-purpose input**
	GTM_TIM6_IN5_4			**Mux input channel 5 of TIM module 6**
	GTM_TIM5_IN1_5			**Mux input channel 1 of TIM module 5**
	GTM_TIM3_IN1_8			**Mux input channel 1 of TIM module 3**
	PSI5_RX3A			**RXD inputs (receive data) channel 3**
	MSC3_SDI0			**Upstream assynchronous input signal**
	P13.10	O0		**General-purpose output**
	GTM_TOUT251	O1		**GTM muxed output**
	ASCLIN0_ATX	O2		**Transmit output**
	IOM_MON2_12			**Monitor input 2**
	IOM_REF2_12			**Reference input 2**
	—	O3		**Reserved**
	—	O4		**Reserved**
	—	O5		**Reserved**
	—	O6		**Reserved**
	—	O7		**Reserved**

Downloaded by IFXDMZ|par-zengzhe 12/02/2019 11:04:31

Table 2-7 Port 13 Functions (cont'd)

Ball	Symbol	Ctrl.	Buffer Type	Function
A13	P13.11	I	SLOW / PU1 / VEXT / ES	**General-purpose input**
	GTM_TIM6_IN6_4			**Mux input channel 6 of TIM module 6**
	GTM_TIM5_IN0_9			**Mux input channel 0 of TIM module 5**
	GTM_TIM3_IN0_9			**Mux input channel 0 of TIM module 3**
	ASCLIN0_ARXE			**Receive input**
	ASCLIN7_ARXD			**Receive input**
	MSC3_INJ0			**Injection signal from port**
	P13.11	O0		**General-purpose output**
	GTM_TOUT250	O1		**GTM muxed output**
	—	O2		**Reserved**
	—	O3		**Reserved**
	PSI5_TX3	O4		**TXD outputs (send data)**
	—	O5		**Reserved**
	—	O6		**Reserved**
	—	O7		**Reserved**
B12	P13.12	I	SLOW / PU1 / VEXT / ES	**General-purpose input**
	GTM_TIM6_IN7_4			**Mux input channel 7 of TIM module 6**
	GTM_TIM4_IN0_6			**Mux input channel 0 of TIM module 4**
	GTM_TIM0_IN0_11			**Mux input channel 0 of TIM module 0**
	ASCLIN3_ARXH			**Receive input**
	I2C1_SDAB			**Serial Data Input**
	CAN21_RXDB			**CAN receive input node 1**
	P13.12	O0		**General-purpose output**
	GTM_TOUT249	O1		**GTM muxed output**
	ASCLIN7_ATX	O2		**Transmit output**
	—	O3		**Reserved**
	—	O4		**Reserved**
	—	O5		**Reserved**
	I2C1_SDA	O6		**Serial Data Output**
	—	O7		**Reserved**

Downloaded by IFXDMZlpar-zengzhe 12/02/2019 11:04:31

Table 2-7 Port 13 Functions (cont'd)

Ball	Symbol	Ctrl.	Buffer Type	Function
A12	P13.13	I	SLOW / PU1 / VEXT / ES	**General-purpose input**
	GTM_TIM7_IN0_3			**Mux input channel 0 of TIM module 7**
	GTM_TIM5_IN5_5			**Mux input channel 5 of TIM module 5**
	GTM_TIM3_IN5_9			**Mux input channel 5 of TIM module 3**
	MSC2_INJ0			**Injection signal from port**
	PSI5_RX3B			**RXD inputs (receive data) channel 3**
	P13.13	O0		**General-purpose output**
	GTM_TOUT262	O1		**GTM muxed output**
	ASCLIN7_ASCLK	O2		**Shift clock output**
	—	O3		**Reserved**
	—	O4		**Reserved**
	—	O5		**Reserved**
	—	O6		**Reserved**
	—	O7		**Reserved**
B11	P13.14	I	SLOW / PU1 / VEXT / ES	**General-purpose input**
	GTM_TIM7_IN1_3			**Mux input channel 1 of TIM module 7**
	GTM_TIM5_IN2_4			**Mux input channel 2 of TIM module 5**
	GTM_TIM3_IN2_7			**Mux input channel 2 of TIM module 3**
	P13.14	O0		**General-purpose output**
	GTM_TOUT252	O1		**GTM muxed output**
	—	O2		**Reserved**
	QSPI5_SLSO4	O3		**Master slave select output**
	—	O4		**Reserved**
	—	O5		**Reserved**
	—	O6		**Reserved**
	—	O7		**Reserved**
A11	P13.15	I	SLOW / PU1 / VEXT / ES	**General-purpose input**
	GTM_TIM7_IN2_3			**Mux input channel 2 of TIM module 7**
	GTM_TIM5_IN7_4			**Mux input channel 7 of TIM module 5**
	GTM_TIM3_IN7_9			**Mux input channel 7 of TIM module 3**
	P13.15	O0		**General-purpose output**
	GTM_TOUT264	O1		**GTM muxed output**
	ASCLIN7_ASLSO	O2		**Slave select signal output**
	—	O3		**Reserved**
	PSI5_TX3	O4		**TXD outputs (send data)**
	—	O5		**Reserved**
	—	O6		**Reserved**
	—	O7		**Reserved**

Downloaded by IFXDMZlpar-zengzhe 12/02/2019 11:04:31

Table 2-8 Port 14 Functions

Ball	Symbol	Ctrl.	Buffer Type	Function
G21	P14.0	I	FAST / PU1 / VEXT / ES2	**General-purpose input**
	GTM_TIM1_IN3_5			**Mux input channel 3 of TIM module 1**
	GTM_TIM0_IN3_5			**Mux input channel 3 of TIM module 0**
	SENT_SENT17D			**Receive input channel 17**
	P14.0	O0		**General-purpose output**
	GTM_TOUT80	O1		**GTM muxed output**
	ASCLIN0_ATX	O2		**Transmit output**
	IOM_MON2_12			**Monitor input 2**
	IOM_REF2_12			**Reference input 2**
	ERAY0_TXDA	O3		**Transmit Channel A**
	ERAY0_TXDB	O4		**Transmit Channel B**
	CAN01_TXD	O5		**CAN transmit output node 1**
	IOM_MON2_6			**Monitor input 2**
	IOM_REF2_6			**Reference input 2**
	ASCLIN0_ASCLK	O6		**Shift clock output**
	CCU60_COUT62	O7		**T12 PWM channel 62**
	IOM_MON1_5			**Monitor input 1**
	IOM_REF1_1			**Reference input 1**

Downloaded by IFXDMZ|par-zengzhe 12/02/2019 11:04:31

Table 2-8 Port 14 Functions (cont'd)

Ball	Symbol	Ctrl.	Buffer Type	Function
F20	P14.1	I	FAST / PU1 / VEXT / ES2	**General-purpose input**
	GTM_TIM1_IN4_3			**Mux input channel 4 of TIM module 1**
	GTM_TIM0_IN4_3			**Mux input channel 4 of TIM module 0**
	ERAY0_RXDA3			**Receive Channel A3**
	ASCLIN0_ARXA			**Receive input**
	SENT_SENT18D			**Receive input channel 18**
	ERAY0_RXDB3			**Receive Channel B3**
	CAN01_RXDB			**CAN receive input node 1**
	SCU_E_REQ3_1			**ERU Channel 3 inputs 0 to 5 (0 is the LSB and 5 is the MSB)**
	PMS_PINAWKP			**PINA (P14.1) pin input**
	P14.1	O0		**General-purpose output**
	GTM_TOUT81	O1		**GTM muxed output**
	ASCLIN0_ATX	O2		**Transmit output**
	IOM_MON2_12			**Monitor input 2**
	IOM_REF2_12			**Reference input 2**
	—	O3		**Reserved**
	—	O4		**Reserved**
	—	O5		**Reserved**
	—	O6		**Reserved**
	CCU60_COUT63	O7		**T13 PWM channel 63**
	IOM_MON1_6			**Monitor input 1**
	IOM_REF1_0			**Reference input 1**
K18	P14.2	I	SLOW / PU2 / VEXT / ES	**General-purpose input**
	GTM_TIM1_IN5_3			**Mux input channel 5 of TIM module 1**
	GTM_TIM0_IN5_3			**Mux input channel 5 of TIM module 0**
	SCU_PD_HWCFG2			**Hardware configuration pin 2**
	P14.2	O0		**General-purpose output**
	GTM_TOUT82	O1		**GTM muxed output**
	ASCLIN2_ATX	O2		**Transmit output**
	IOM_MON2_14			**Monitor input 2**
	IOM_REF2_14			**Reference input 2**
	QSPI2_SLSO1	O3		**Master slave select output**
	—	O4		**Reserved**
	—	O5		**Reserved**
	ASCLIN2_ASCLK	O6		**Shift clock output**
	—	O7		**Reserved**

Downloaded by IFXDMZ|par-zengzhe 12/02/2019 11:04:31

Table 2-8 Port 14 Functions (cont'd)

Ball	Symbol	Ctrl.	Buffer Type	Function
G19	P14.3	I	SLOW / PU2 / VEXT / ES	**General-purpose input**
	GTM_TIM1_IN6_3			**Mux input channel 6 of TIM module 1**
	GTM_TIM0_IN6_3			**Mux input channel 6 of TIM module 0**
	SCU_PD_HWCFG3			**Hardware configuration pin 3**
	ASCLIN2_ARXA			**Receive input**
	MSC0_SDI2			**Upstream assynchronous input signal**
	SCU_E_REQ1_0			**ERU Channel 1 inputs 0 to 5 (0 is the LSB and 5 is the MSB)**
	P14.3	O0		**General-purpose output**
	GTM_TOUT83	O1		**GTM muxed output**
	ASCLIN2_ATX	O2		**Transmit output**
	IOM_MON2_14			**Monitor input 2**
	IOM_REF2_14			**Reference input 2**
	QSPI2_SLSO3	O3		**Master slave select output**
	ASCLIN1_ASLSO	O4		**Slave select signal output**
	ASCLIN3_ASLSO	O5		**Slave select signal output**
	—	O6		**Reserved**
	—	O7		**Reserved**
G20	P14.4	I	SLOW / PU2 / VEXT / ES	**General-purpose input**
	GTM_TIM1_IN7_2			**Mux input channel 7 of TIM module 1**
	GTM_TIM0_IN7_2			**Mux input channel 0 of TIM module 0**
	SCU_PD_HWCFG6			**Hardware configuration pin 6**
	GTM_DTMT0_0			**CDTM0_DTM0**
	P14.4	O0		**General-purpose output**
	GTM_TOUT84	O1		**GTM muxed output**
	—	O2		**Reserved**
	—	O3		**Reserved**
	—	O4		**Reserved**
	—	O5		**Reserved**
	GETH_PPS	O6		**Pulse Per Second**
	—	O7		**Reserved**

Downloaded by IFXDMZlpar-zengzhe 12/02/2019 11:04:31

Table 2-8 Port 14 Functions (cont'd)

Ball	Symbol	Ctrl.	Buffer Type	Function
F19	P14.5	I	FAST / PU2 / VEXT / ES	**General-purpose input**
	GTM_TIM1_IN0_4			**Mux input channel 0 of TIM module 1**
	GTM_TIM0_IN0_4			**Mux input channel 0 of TIM module 0**
	SCU_PD_HWCFG1			**Hardware configuration pin 1**
	QSPI5_MRSTB			**Master SPI data input**
	GTM_DTMA2_0			**CDTM2_DTM4**
	P14.5	O0		**General-purpose output**
	GTM_TOUT85	O1		**GTM muxed output**
	—	O2		**Reserved**
	QSPI5_MRST	O3		**Slave SPI data output**
	—	O4		**Reserved**
	—	O5		**Reserved**
	ERAY0_TXDB	O6		**Transmit Channel B**
	ERAY1_TXDB	O7		**Transmit Channel B**
G18	P14.6	I	FAST / PU1 / VEXT / ES	**General-purpose input**
	GTM_TIM1_IN1_4			**Mux input channel 1 of TIM module 1**
	GTM_TIM0_IN1_4			**Mux input channel 1 of TIM module 0**
	QSPI5_MTSRB			**Save SPI data input**
	P14.6	O0		**General-purpose output**
	GTM_TOUT86	O1		**GTM muxed output**
	QSPI5_MTSR	O2		**Master SPI data output**
	QSPI2_SLSO2	O3		**Master slave select output**
	CAN13_TXD	O4		**CAN transmit output node 3**
	—	O5		**Reserved**
	ERAY0_TXENB	O6		**Transmit Enable Channel B**
	ERAY1_TXENB	O7		**Transmit Enable Channel B**

Downloaded by IFXDMZlpar-zengzhe 12/02/2019 11:04:31

Table 2-8 Port 14 Functions (cont'd)

Ball	Symbol	Ctrl.	Buffer Type	Function
J18	P14.7	I	SLOW / PU1 / VEXT / ES	**General-purpose input**
	GTM_TIM4_IN7_10			**Mux input channel 7 of TIM module 4**
	GTM_TIM1_IN0_5			**Mux input channel 0 of TIM module 1**
	GTM_TIM0_IN0_5			**Mux input channel 0 of TIM module 0**
	ERAY0_RXDB0			**Receive Channel B0**
	ERAY1_RXDB0			**Receive Channel B0**
	CAN10_RXDB			**CAN receive input node 0**
	CAN13_RXDA			**CAN receive input node 3**
	ASCLIN9_ARXC			**Receive input**
	P14.7	O0		**General-purpose output**
	GTM_TOUT87	O1		**GTM muxed output**
	ASCLIN0_ARTS	O2		**Ready to send output**
	QSPI2_SLSO4	O3		**Master slave select output**
	ASCLIN9_ATX	O4		**Transmit output**
	—	O5		**Reserved**
	—	O6		**Reserved**
	—	O7		**Reserved**
F18	P14.8	I	SLOW / PU1 / VEXT / ES	**General-purpose input**
	GTM_TIM3_IN2_3			**Mux input channel 2 of TIM module 3**
	GTM_TIM2_IN2_3			**Mux input channel 2 of TIM module 2**
	ERAY0_RXDA0			**Receive Channel A0**
	CAN02_RXDD			**CAN receive input node 2**
	ASCLIN1_ARXD			**Receive input**
	ERAY1_RXDA0			**Receive Channel A0**
	P14.8	O0		**General-purpose output**
	GTM_TOUT88	O1		**GTM muxed output**
	ASCLIN5_ASLSO	O2		**Slave select signal output**
	ASCLIN7_ASLSO	O3		**Slave select signal output**
	—	O4		**Reserved**
	—	O5		**Reserved**
	—	O6		**Reserved**
	—	O7		**Reserved**

Downloaded by IFXDMZ|par-zengzhe 12/02/2019 11:04:31

Table 2-8 Port 14 Functions (cont'd)

Ball	Symbol	Ctrl.	Buffer Type	Function
J17	P14.9	I	LVDS_RX / FAST / PU1 / VEXT / ES	**General-purpose input**
	GTM_TIM3_IN3_3			**Mux input channel 3 of TIM module 3**
	GTM_TIM2_IN3_3			**Mux input channel 3 of TIM module 2**
	ASCLIN0_ACTSA			**Clear to send input**
	QSPI2_MRSTFN			**Master SPI data input (LVDS N line)**
	ASCLIN9_ARXD			**Receive input**
	P14.9	O0		**General-purpose output**
	GTM_TOUT89	O1		**GTM muxed output**
	CAN23_TXD	O2		**CAN transmit output node 3**
	MSC0_EN1	O3		**Chip Select**
	CAN10_TXD	O4		**CAN transmit output node 0**
	ERAY0_TXENB	O5		**Transmit Enable Channel B**
	ERAY0_TXENA	O6		**Transmit Enable Channel A**
	ERAY1_TXENA	O7		**Transmit Enable Channel A**
J16	P14.10	I	LVDS_RX / FAST / PU1 / VEXT / ES	**General-purpose input**
	GTM_TIM3_IN4_3			**Mux input channel 4 of TIM module 3**
	GTM_TIM2_IN4_3			**Mux input channel 4 of TIM module 2**
	CAN23_RXDA			**CAN receive input node 3**
	QSPI2_MRSTFP			**Master SPI data input (LVDS P line)**
	P14.10	O0		**General-purpose output**
	GTM_TOUT90	O1		**GTM muxed output**
	QSPI5_SCLK	O2		**Master SPI clock output**
	MSC0_EN0	O3		**Chip Select**
	ASCLIN1_ATX	O4		**Transmit output**
	IOM_MON2_13			**Monitor input 2**
	IOM_REF2_13			**Reference input 2**
	CAN02_TXD	O5		**CAN transmit output node 2**
	IOM_MON2_7			**Monitor input 2**
	IOM_REF2_7			**Reference input 2**
	ERAY0_TXDA	O6		**Transmit Channel A**
	ERAY1_TXDA	O7		**Transmit Channel A**

Downloaded by IFXDMZlpar-zengzhe 12/02/2019 11:04:31

Table 2-8 Port 14 Functions (cont'd)

Ball	Symbol	Ctrl.	Buffer Type	Function
A20	P14.11	I	SLOW / PU1 / VEXT / ES	**General-purpose input**
	GTM_TIM7_IN6_2			**Mux input channel 6 of TIM module 7**
	GTM_TIM5_IN1_4			**Mux input channel 1 of TIM module 5**
	GTM_TIM3_IN1_9			**Mux input channel 1 of TIM module 3**
	MSC2_SDI1			**Upstream assynchronous input signal**
	P14.11	O0		**General-purpose output**
	GTM_TOUT258	O1		**GTM muxed output**
	—	O2		**Reserved**
	—	O3		**Reserved**
	MSC2_EN2	O4		**Chip Select**
	MSC2_SOP	O5		**Data output - direct part of the differential signal**
	—	O6		**Reserved**
	—	O7		**Reserved**
B19	P14.12	I	SLOW / PU1 / VEXT / ES	**General-purpose input**
	GTM_TIM6_IN4_3			**Mux input channel 4 of TIM module 6**
	GTM_TIM5_IN4_5			**Mux input channel 4 of TIM module 5**
	GTM_TIM3_IN4_8			**Mux input channel 4 of TIM module 3**
	MSC2_SDI0			**Upstream assynchronous input signal**
	P14.12	O0		**General-purpose output**
	GTM_TOUT261	O1		**GTM muxed output**
	ASCLIN5_ASCLK	O2		**Shift clock output**
	ASCLIN7_ASCLK	O3		**Shift clock output**
	—	O4		**Reserved**
	—	O5		**Reserved**
	QSPI5_SLSO6	O6		**Master slave select output**
	—	O7		**Reserved**

Downloaded by IFXDMZ|par-zengzhe 12/02/2019 11:04:31

Table 2-8 Port 14 Functions (cont'd)

Ball	Symbol	Ctrl.	Buffer Type	Function
A19	P14.13	I	FAST / PU1 / VEXT / ES	**General-purpose input**
	GTM_TIM6_IN5_3			**Mux input channel 5 of TIM module 6**
	GTM_TIM5_IN3_5			**Mux input channel 3 of TIM module 5**
	GTM_TIM3_IN3_6			**Mux input channel 3 of TIM module 3**
	QSPI5_SCLKB			**Slave SPI clock inputs**
	P14.13	O0		**General-purpose output**
	GTM_TOUT260	O1		**GTM muxed output**
	—	O2		**Reserved**
	QSPI5_SCLK	O3		**Master SPI clock output**
	MSC2_EN1	O4		**Chip Select**
	CAN22_TXD	O5		**CAN transmit output node 2**
	—	O6		**Reserved**
	—	O7		**Reserved**
B18	P14.14	I	FAST / PU1 / VEXT / ES	**General-purpose input**
	GTM_TIM6_IN6_3			**Mux input channel 6 of TIM module 6**
	GTM_TIM5_IN2_3			**Mux input channel 2 of TIM module 5**
	GTM_TIM3_IN2_8			**Mux input channel 2 of TIM module 3**
	CAN22_RXDD			**CAN receive input node 2**
	P14.14	O0		**General-purpose output**
	GTM_TOUT259	O1		**GTM muxed output**
	ASCLIN5_ATX	O2		**Transmit output**
	ASCLIN7_ATX	O3		**Transmit output**
	MSC2_EN0	O4		**Chip Select**
	CAN23_TXD	O5		**CAN transmit output node 3**
	QSPI5_SLSO7	O6		**Master slave select output**
	—	O7		**Reserved**

Downloaded by IFXDMZlpar-zengzhe 12/02/2019 11:04:31

Table 2-8 Port 14 Functions (cont'd)

Ball	Symbol	Ctrl.	Buffer Type	Function
A18	P14.15	I	SLOW / PU1 / VEXT / ES	**General-purpose input**
	GTM_TIM6_IN7_3			**Mux input channel 7 of TIM module 6**
	GTM_TIM5_IN6_5			**Mux input channel 6 of TIM module 5**
	GTM_TIM3_IN6_9			**Mux input channel 6 of TIM module 3**
	MSC2_INJ1			**Injection signal from port**
	ASCLIN5_ARXD			**Receive input**
	ASCLIN7_ARXA			**Receive input**
	CAN23_RXDC			**CAN receive input node 3**
	MSC3_INJ1			**Injection signal from port**
	P14.15	O0		**General-purpose output**
	GTM_TOUT263	O1		**GTM muxed output**
	ASCLIN1_ATX	O2		**Transmit output**
	IOM_MON2_13			**Monitor input 2**
	IOM_REF2_13			**Reference input 2**
	—	O3		**Reserved**
	—	O4		**Reserved**
	—	O5		**Reserved**
	QSPI5_SLSO8	O6		**Master slave select output**
	—	O7		**Reserved**

Downloaded by IFXDMZlpar-zengzhe 12/02/2019 11:04:31

Table 2-9 Port 15 Functions

Ball	Symbol	Ctrl.	Buffer Type	Function
G25	P15.0	I	FAST / PU1 / VEXT / ES	**General-purpose input**
	GTM_TIM3_IN3_4			**Mux input channel 3 of TIM module 3**
	GTM_TIM2_IN3_4			**Mux input channel 3 of TIM module 2**
	SDMMC0_DAT7_IN			**read data in**
	P15.0	O0		**General-purpose output**
	GTM_TOUT71	O1		**GTM muxed output**
	ASCLIN1_ATX	O2		**Transmit output**
	IOM_MON2_13			**Monitor input 2**
	IOM_REF2_13			**Reference input 2**
	QSPI0_SLSO13	O3		**Master slave select output**
	—	O4		**Reserved**
	CAN02_TXD	O5		**CAN transmit output node 2**
	IOM_MON2_7			**Monitor input 2**
	IOM_REF2_7			**Reference input 2**
	ASCLIN1_ASCLK	O6		**Shift clock output**
	—	O7		**Reserved**
	SDMMC0_DAT7	O		**write data out**
F23	P15.1	I	FAST / PU1 / VEXT / ES	**General-purpose input**
	GTM_TIM3_IN4_4			**Mux input channel 4 of TIM module 3**
	GTM_TIM2_IN4_4			**Mux input channel 4 of TIM module 2**
	CAN02_RXDA			**CAN receive input node 2**
	ASCLIN1_ARXA			**Receive input**
	QSPI2_SLSIB			**Slave select input**
	SCU_E_REQ7_2			**ERU Channel 7 inputs 0 to 5 (0 is the LSB and 5 is the MSB)**
	P15.1	O0		**General-purpose output**
	GTM_TOUT72	O1		**GTM muxed output**
	ASCLIN1_ATX	O2		**Transmit output**
	IOM_MON2_13			**Monitor input 2**
	IOM_REF2_13			**Reference input 2**
	QSPI2_SLSO5	O3		**Master slave select output**
	—	O4		**Reserved**
	—	O5		**Reserved**
	—	O6		**Reserved**
	SDMMC0_CLK	O7		**card clock**

Downloaded by IFXDMZlpar-zengzhe 12/02/2019 11:04:31

Table 2-9 Port 15 Functions (cont'd)

Ball	Symbol	Ctrl.	Buffer Type	Function
H24	P15.2	I	FAST / PU1 / VEXT / ES	**General-purpose input**
	GTM_TIM3_IN5_4			**Mux input channel 5 of TIM module 3**
	GTM_TIM2_IN5_4			**Mux input channel 5 of TIM module 2**
	QSPI2_SLSIA			**Slave select input**
	SENT_SENT10D			**Receive input channel 10**
	QSPI2_MRSTE			**Master SPI data input**
	QSPI2_HSICINA			**Highspeed capture channel**
	P15.2	O0		**General-purpose output**
	GTM_TOUT73	O1		**GTM muxed output**
	ASCLIN0_ATX	O2		**Transmit output**
	IOM_MON2_12			**Monitor input 2**
	IOM_REF2_12			**Reference input 2**
	QSPI2_SLSO0	O3		**Master slave select output**
	—	O4		**Reserved**
	CAN01_TXD	O5		**CAN transmit output node 1**
	IOM_MON2_6			**Monitor input 2**
	IOM_REF2_6			**Reference input 2**
	ASCLIN0_ASCLK	O6		**Shift clock output**
	—	O7		**Reserved**
G22	P15.3	I	FAST / PU1 / VEXT / ES	**General-purpose input**
	GTM_TIM3_IN6_4			**Mux input channel 6 of TIM module 3**
	GTM_TIM2_IN6_4			**Mux input channel 6 of TIM module 2**
	CAN01_RXDA			**CAN receive input node 1**
	ASCLIN0_ARXB			**Receive input**
	QSPI2_SCLKA			**Slave SPI clock inputs**
	QSPI2_HSICINB			**Highspeed capture channel**
	SDMMC0_CMD_IN			**command in**
	P15.3	O0		**General-purpose output**
	GTM_TOUT74	O1		**GTM muxed output**
	ASCLIN0_ATX	O2		**Transmit output**
	IOM_MON2_12			**Monitor input 2**
	IOM_REF2_12			**Reference input 2**
	QSPI2_SCLK	O3		**Master SPI clock output**
	—	O4		**Reserved**
	MSC0_EN1	O5		**Chip Select**
	—	O6		**Reserved**
	—	O7		**Reserved**
	SDMMC0_CMD	O		**command out**

Downloaded by IFXDMZ|par-zengzhe 12/02/2019 11:04:31

Table 2-9 Port 15 Functions (cont'd)

Ball	Symbol	Ctrl.	Buffer Type	Function
F22	P15.4	I	FAST / PU1 / VEXT / ES	**General-purpose input**
	GTM_TIM3_IN7_4			**Mux input channel 7 of TIM module 3**
	GTM_TIM2_IN7_4			**Mux input channel 7 of TIM module 2**
	I2C0_SCLC			**Serial Clock Input**
	QSPI2_MRSTA			**Master SPI data input**
	SCU_E_REQ0_0			**ERU Channel 0 inputs 0 to 5 (0 is the LSB and 5 is the MSB)**
	SENT_SENT11D			**Receive input channel 11**
	P15.4	O0		**General-purpose output**
	GTM_TOUT75	O1		**GTM muxed output**
	ASCLIN1_ATX	O2		**Transmit output**
	IOM_MON2_13			**Monitor input 2**
	IOM_REF2_13			**Reference input 2**
	QSPI2_MRST	O3		**Slave SPI data output**
	IOM_MON2_2			**Monitor input 2**
	IOM_REF2_2			**Reference input 2**
	—	O4		**Reserved**
	—	O5		**Reserved**
	I2C0_SCL	O6		**Serial Clock Output**
	CCU60_CC62	O7		**T12 PWM channel 62**
	IOM_MON1_0			**Monitor input 1**
	IOM_REF1_4			**Reference input 1**

Downloaded by IFXDMZ|par-zengzhe 12/02/2019 11:04:31

Table 2-9 Port 15 Functions (cont'd)

Ball	Symbol	Ctrl.	Buffer Type	Function
K19	P15.5	I	FAST / PU1 / VEXT / ES	**General-purpose input**
	GTM_TIM3_IN0_4			**Mux input channel 0 of TIM module 3**
	GTM_TIM2_IN0_4			**Mux input channel 0 of TIM module 2**
	ASCLIN1_ARXB			**Receive input**
	I2C0_SDAC			**Serial Data Input**
	QSPI2_MTSRA			**Save SPI data input**
	SCU_E_REQ4_3			**ERU Channel 4 inputs 0 to 5 (0 is the LSB and 5 is the MSB)**
	P15.5	O0		**General-purpose output**
	GTM_TOUT76	O1		**GTM muxed output**
	ASCLIN1_ATX	O2		**Transmit output**
	IOM_MON2_13			**Monitor input 2**
	IOM_REF2_13			**Reference input 2**
	QSPI2_MTSR	O3		**Master SPI data output**
	—	O4		**Reserved**
	MSC0_EN0	O5		**Chip Select**
	I2C0_SDA	O6		**Serial Data Output**
	CCU60_CC61	O7		**T12 PWM channel 61**
	IOM_MON1_1			**Monitor input 1**
	IOM_REF1_5			**Reference input 1**
F21	P15.6	I	FAST / PU1 / VEXT / ES	**General-purpose input**
	GTM_TIM2_IN2_14			**Mux input channel 2 of TIM module 2**
	GTM_TIM1_IN0_6			**Mux input channel 0 of TIM module 1**
	GTM_TIM0_IN0_6			**Mux input channel 0 of TIM module 0**
	QSPI2_MTSRB			**Save SPI data input**
	P15.6	O0		**General-purpose output**
	GTM_TOUT77	O1		**GTM muxed output**
	ASCLIN3_ATX	O2		**Transmit output**
	IOM_MON2_15			**Monitor input 2**
	IOM_REF2_15			**Reference input 2**
	QSPI2_MTSR	O3		**Master SPI data output**
	QSPI5_SLSO3	O4		**Master slave select output**
	QSPI2_SCLK	O5		**Master SPI clock output**
	ASCLIN3_ASCLK	O6		**Shift clock output**
	CCU60_CC60	O7		**T12 PWM channel 60**
	IOM_MON1_2			**Monitor input 1**
	IOM_REF1_6			**Reference input 1**

Downloaded by IFXDMZlpar-zengzhe 12/02/2019 11:04:31

Table 2-9 Port 15 Functions (cont'd)

Ball	Symbol	Ctrl.	Buffer Type	Function
J20	P15.7	I	FAST / PU1 / VEXT / ES	**General-purpose input**
	GTM_TIM1_IN1_5			**Mux input channel 1 of TIM module 1**
	GTM_TIM0_IN1_5			**Mux input channel 1 of TIM module 0**
	ASCLIN3_ARXA			**Receive input**
	QSPI2_MRSTB			**Master SPI data input**
	P15.7	O0		**General-purpose output**
	GTM_TOUT78	O1		**GTM muxed output**
	ASCLIN3_ATX	O2		**Transmit output**
	IOM_MON2_15			**Monitor input 2**
	IOM_REF2_15			**Reference input 2**
	QSPI2_MRST	O3		**Slave SPI data output**
	IOM_MON2_2			**Monitor input 2**
	IOM_REF2_2			**Reference input 2**
	—	O4		**Reserved**
	—	O5		**Reserved**
	—	O6		**Reserved**
	CCU60_COUT60	O7		**T12 PWM channel 60**
	IOM_MON1_3			**Monitor input 1**
	IOM_REF1_3			**Reference input 1**
J19	P15.8	I	FAST / PU1 / VEXT / ES	**General-purpose input**
	GTM_TIM1_IN2_5			**Mux input channel 2 of TIM module 1**
	GTM_TIM0_IN2_5			**Mux input channel 2 of TIM module 0**
	QSPI2_SCLKB			**Slave SPI clock inputs**
	SCU_E_REQ5_0			**ERU Channel 5 inputs 0 to 5 (0 is the LSB and 5 is the MSB)**
	P15.8	O0		**General-purpose output**
	GTM_TOUT79	O1		**GTM muxed output**
	—	O2		**Reserved**
	QSPI2_SCLK	O3		**Master SPI clock output**
	—	O4		**Reserved**
	—	O5		**Reserved**
	ASCLIN3_ASCLK	O6		**Shift clock output**
	CCU60_COUT61	O7		**T12 PWM channel 61**
	IOM_MON1_4			**Monitor input 1**
	IOM_REF1_2			**Reference input 1**

Downloaded by IFXDMZlpar-zengzhe 12/02/2019 11:04:31

Table 2-9 Port 15 Functions (cont'd)

Ball	Symbol	Ctrl.	Buffer Type	Function
B24	P15.10	I	LVDS_TX / FAST / PU1 / VEXT / ES6	**General-purpose input**
	GTM_TIM7_IN0_2			**Mux input channel 0 of TIM module 7**
	GTM_TIM4_IN1_7			**Mux input channel 1 of TIM module 4**
	GTM_TIM2_IN1_8			**Mux input channel 1 of TIM module 2**
	QSPI5_MRSTA			**Master SPI data input**
	P15.10	O0		**General-purpose output**
	GTM_TOUT242	O1		**GTM muxed output**
	—	O2		**Reserved**
	QSPI5_MRST	O3		**Slave SPI data output**
	MSC3_FCLN	O4		**Shift-clock inverted part of the differential signal**
	—	O5		**Reserved**
	—	O6		**Reserved**
	—	O7		**Reserved**
A24	P15.11	I	LVDS_TX / FAST / PU1 / VEXT / ES6	**General-purpose input**
	GTM_TIM7_IN1_2			**Mux input channel 1 of TIM module 7**
	GTM_TIM4_IN2_6			**Mux input channel 2 of TIM module 4**
	GTM_TIM2_IN2_8			**Mux input channel 2 of TIM module 2**
	QSPI5_SLSIA			**Slave select input**
	P15.11	O0		**General-purpose output**
	GTM_TOUT243	O1		**GTM muxed output**
	—	O2		**Reserved**
	QSPI5_SLSO2	O3		**Master slave select output**
	MSC3_FCLP	O4		**Shift-clock direct part of the differential signal**
	—	O5		**Reserved**
	—	O6		**Reserved**
	—	O7		**Reserved**
B23	P15.12	I	LVDS_TX / FAST / PU1 / VEXT / ES6	**General-purpose input**
	GTM_TIM7_IN2_2			**Mux input channel 2 of TIM module 7**
	GTM_TIM4_IN3_6			**Mux input channel 3 of TIM module 4**
	GTM_TIM2_IN3_6			**Mux input channel 3 of TIM module 2**
	P15.12	O0		**General-purpose output**
	GTM_TOUT244	O1		**GTM muxed output**
	—	O2		**Reserved**
	QSPI5_SLSO1	O3		**Master slave select output**
	MSC3_SON	O4		**Data output - inverted part of the differential signal**
	—	O5		**Reserved**
	—	O6		**Reserved**
	—	O7		**Reserved**

Downloaded by IFXDMZ|par-zengzhe 12/02/2019 11:04:31

Table 2-9 Port 15 Functions (cont'd)

Ball	Symbol	Ctrl.	Buffer Type	Function
A23	P15.13	I	LVDS_TX / FAST / PU1 / VEXT / ES6	**General-purpose input**
	GTM_TIM7_IN3_3			**Mux input channel 3 of TIM module 7**
	GTM_TIM4_IN4_6			**Mux input channel 4 of TIM module 4**
	GTM_TIM2_IN4_9			**Mux input channel 4 of TIM module 2**
	P15.13	O0		**General-purpose output**
	GTM_TOUT245	O1		**GTM muxed output**
	—	O2		**Reserved**
	QSPI5_SLSO0	O3		**Master slave select output**
	MSC3_SOP	O4		**Data output - direct part of the differential signal**
	—	O5		**Reserved**
	—	O6		**Reserved**
	—	O7		**Reserved**
B22	P15.14	I	FAST / PU1 / VEXT / ES	**General-purpose input**
	GTM_TIM7_IN4_2			**Mux input channel 4 of TIM module 7**
	GTM_TIM4_IN5_6			**Mux input channel 5 of TIM module 4**
	GTM_TIM2_IN5_12			**Mux input channel 5 of TIM module 2**
	QSPI5_MTSRA			**Save SPI data input**
	P15.14	O0		**General-purpose output**
	GTM_TOUT246	O1		**GTM muxed output**
	—	O2		**Reserved**
	QSPI5_MTSR	O3		**Master SPI data output**
	MSC3_EN0	O4		**Chip Select**
	—	O5		**Reserved**
	—	O6		**Reserved**
	—	O7		**Reserved**
A22	P15.15	I	FAST / PU1 / VEXT / ES	**General-purpose input**
	GTM_TIM7_IN5_2			**Mux input channel 5 of TIM module 7**
	GTM_TIM4_IN6_6			**Mux input channel 6 of TIM module 4**
	GTM_TIM2_IN6_9			**Mux input channel 6 of TIM module 2**
	QSPI5_SCLKA			**Slave SPI clock inputs**
	P15.15	O0		**General-purpose output**
	GTM_TOUT247	O1		**GTM muxed output**
	—	O2		**Reserved**
	QSPI5_SCLK	O3		**Master SPI clock output**
	MSC3_EN1	O4		**Chip Select**
	—	O5		**Reserved**
	—	O6		**Reserved**
	—	O7		**Reserved**

Downloaded by IFXDMZ|par-zengzhe 12/02/2019 11:04:31

Table 2-10 Port 20 Functions

Ball	Symbol	Ctrl.	Buffer Type	Function
N25	P20.0	I	FAST / PU1 / VEXT / ES	**General-purpose input**
	GTM_TIM1_IN6_7			**Mux input channel 6 of TIM module 1**
	GTM_TIM1_IN4_9			**Mux input channel 4 of TIM module 1**
	GTM_TIM0_IN6_7			**Mux input channel 6 of TIM module 0**
	CAN03_RXDC			**CAN receive input node 3**
	CCU_PAD_SYSCLK			**Clock input pin for System PLL and Peripheral PLL**
	CAN21_RXDC			**CAN receive input node 1**
	CBS_TGI0			**Trigger input**
	SCU_E_REQ6_0			**ERU Channel 6 inputs 0 to 5 (0 is the LSB and 5 is the MSB)**
	GPT120_T6EUDA			**Count direction control input of core timer T6**
	P20.0	O0		**General-purpose output**
	GTM_TOUT59	O1		**GTM muxed output**
	ASCLIN3_ATX	O2		**Transmit output**
	IOM_MON2_15			**Monitor input 2**
	IOM_REF2_15			**Reference input 2**
	ASCLIN3_ASCLK	O3		**Shift clock output**
	—	O4		**Reserved**
	HSCT0_SYSCLK_OUT	O5		**sys clock output**
	—	O6		**Reserved**
	—	O7		**Reserved**
	CBS_TGO0	O		**Trigger output**
M24	P20.1	I	SLOW / PU1 / VEXT / ES	**General-purpose input**
	GTM_TIM4_IN4_11			**Mux input channel 4 of TIM module 4**
	GTM_TIM3_IN3_5			**Mux input channel 3 of TIM module 3**
	GTM_TIM2_IN3_5			**Mux input channel 3 of TIM module 2**
	CBS_TGI1			**Trigger input**
	GTM_DTMA1_1			**CDTM1_DTM4**
	P20.1	O0		**General-purpose output**
	GTM_TOUT60	O1		**GTM muxed output**
	—	O2		**Reserved**
	—	O3		**Reserved**
	—	O4		**Reserved**
	—	O5		**Reserved**
	—	O6		**Reserved**
	—	O7		**Reserved**
	CBS_TGO1	O		**Trigger output**

Downloaded by IFXDMZ|par-zengzhe 12/02/2019 11:04:31

Table 2-10 Port 20 Functions (cont'd)

Ball	Symbol	Ctrl.	Buffer Type	Function
N24	P20.2	I	S / PU / VEXT	**General-purpose input** This pin is latched at power on reset release to enter test mode.
	$\overline{\text{TESTMODE}}$			**Testmode Enable Input**
M25	P20.3	I	SLOW / PU1 / VEXT / ES	**General-purpose input**
	GTM_TIM4_IN5_11			**Mux input channel 5 of TIM module 4**
	GTM_TIM3_IN4_5			**Mux input channel 4 of TIM module 3**
	GTM_TIM2_IN4_5			**Mux input channel 4 of TIM module 2**
	ASCLIN3_ARXC			**Receive input**
	GPT120_T6INA			**Trigger/gate input of core timer T6**
	P20.3	O0		**General-purpose output**
	GTM_TOUT61	O1		**GTM muxed output**
	ASCLIN3_ATX	O2		**Transmit output**
	IOM_MON2_15			**Monitor input 2**
	IOM_REF2_15			**Reference input 2**
	QSPI0_SLSO9	O3		**Master slave select output**
	QSPI2_SLSO9	O4		**Master slave select output**
	CAN03_TXD	O5		**CAN transmit output node 3**
	IOM_MON2_8			**Monitor input 2**
	IOM_REF2_8			**Reference input 2**
	CAN21_TXD	O6		**CAN transmit output node 1**
	—	O7		**Reserved**
L22	P20.6	I	SLOW / PU1 / VEXT / ES	**General-purpose input**
	GTM_TIM6_IN0_1			**Mux input channel 0 of TIM module 6**
	GTM_TIM3_IN6_5			**Mux input channel 6 of TIM module 3**
	GTM_TIM2_IN6_5			**Mux input channel 6 of TIM module 2**
	CAN12_RXDA			**CAN receive input node 2**
	ASCLIN9_ARXE			**Receive input**
	P20.6	O0		**General-purpose output**
	GTM_TOUT62	O1		**GTM muxed output**
	ASCLIN1_ARTS	O2		**Ready to send output**
	QSPI0_SLSO8	O3		**Master slave select output**
	QSPI2_SLSO8	O4		**Master slave select output**
	—	O5		**Reserved**
	—	O6		**Reserved**
	—	O7		**Reserved**

Downloaded by IFXDMZ|par-zengzhe 12/02/2019 11:04:31

Table 2-10 Port 20 Functions (cont'd)

Ball	Symbol	Ctrl.	Buffer Type	Function
L24	P20.7	I	FAST / PU1 / VEXT / ES	**General-purpose input**
	GTM_TIM3_IN7_5			**Mux input channel 7 of TIM module 3**
	GTM_TIM2_IN7_5			**Mux input channel 7 of TIM module 2**
	GTM_TIM1_IN5_8			**Mux input channel 5 of TIM module 1**
	GTM_TIM6_IN1_1			**Mux input channel 1 of TIM module 6**
	CAN00_RXDB			**CAN receive input node 0**
	ASCLIN1_ACTSA			**Clear to send input**
	ASCLIN9_ARXF			**Receive input**
	SDMMC0_DAT0_IN			**read data in**
	P20.7	O0		**General-purpose output**
	GTM_TOUT63	O1		**GTM muxed output**
	ASCLIN9_ATX	O2		**Transmit output**
	—	O3		**Reserved**
	—	O4		**Reserved**
	CAN12_TXD	O5		**CAN transmit output node 2**
	—	O6		**Reserved**
	CCU61_COUT63	O7		**T13 PWM channel 63**
	IOM_MON1_7			**Monitor input 1**
	IOM_REF1_7			**Reference input 1**
	SDMMC0_DAT0	O		**write data out**
L25	P20.8	I	FAST / PU1 / VEXT / ES	**General-purpose input**
	GTM_TIM6_IN2_1			**Mux input channel 2 of TIM module 6**
	GTM_TIM1_IN7_3			**Mux input channel 7 of TIM module 1**
	GTM_TIM0_IN7_3			**Mux input channel 0 of TIM module 0**
	SDMMC0_DAT1_IN			**read data in**
	P20.8	O0		**General-purpose output**
	GTM_TOUT64	O1		**GTM muxed output**
	ASCLIN1_ASLSO	O2		**Slave select signal output**
	QSPI0_SLSO0	O3		**Master slave select output**
	QSPI1_SLSO0	O4		**Master slave select output**
	CAN00_TXD	O5		**CAN transmit output node 0**
	IOM_MON2_5			**Monitor input 2**
	IOM_REF2_5			**Reference input 2**
	—	O6		**Reserved**
	CCU61_CC60	O7		**T12 PWM channel 60**
	IOM_MON1_8			**Monitor input 1**
	IOM_REF1_13			**Reference input 1**
	SDMMC0_DAT1	O		**write data out**

Downloaded by IFXDMZ|par-zengzhe 12/02/2019 11:04:31

Table 2-10 Port 20 Functions (cont'd)

Ball	Symbol	Ctrl.	Buffer Type	Function
K22	P20.9	I	FAST / PU1 / VEXT / ES	**General-purpose input**
	GTM_TIM6_IN3_1			**Mux input channel 3 of TIM module 6**
	GTM_TIM3_IN5_5			**Mux input channel 5 of TIM module 3**
	GTM_TIM2_IN5_5			**Mux input channel 5 of TIM module 2**
	CAN03_RXDE			**CAN receive input node 3**
	ASCLIN1_ARXC			**Receive input**
	QSPI0_SLSIB			**Slave select input**
	SCU_E_REQ7_0			**ERU Channel 7 inputs 0 to 5 (0 is the LSB and 5 is the MSB)**
	P20.9	O0		**General-purpose output**
	GTM_TOUT65	O1		**GTM muxed output**
	—	O2		**Reserved**
	QSPI0_SLSO1	O3		**Master slave select output**
	QSPI1_SLSO1	O4		**Master slave select output**
	—	O5		**Reserved**
	—	O6		**Reserved**
	CCU61_CC61	O7		**T12 PWM channel 61**
	IOM_MON1_9			**Monitor input 1**
	IOM_REF1_12			**Reference input 1**
K24	P20.10	I	FAST / PU1 / VEXT / ES	**General-purpose input**
	GTM_TIM3_IN6_6			**Mux input channel 6 of TIM module 3**
	GTM_TIM2_IN6_6			**Mux input channel 6 of TIM module 2**
	SDMMC0_DAT2_IN			**read data in**
	P20.10	O0		**General-purpose output**
	GTM_TOUT66	O1		**GTM muxed output**
	ASCLIN1_ATX	O2		**Transmit output**
	IOM_MON2_13			**Monitor input 2**
	IOM_REF2_13			**Reference input 2**
	QSPI0_SLSO6	O3		**Master slave select output**
	QSPI2_SLSO7	O4		**Master slave select output**
	CAN03_TXD	O5		**CAN transmit output node 3**
	IOM_MON2_8			**Monitor input 2**
	IOM_REF2_8			**Reference input 2**
	ASCLIN1_ASCLK	O6		**Shift clock output**
	CCU61_CC62	O7		**T12 PWM channel 62**
	IOM_MON1_10			**Monitor input 1**
	IOM_REF1_11			**Reference input 1**
	SDMMC0_DAT2	O		**write data out**

Downloaded by IFXDMZ|par-zengzhe 12/02/2019 11:04:31

Table 2-10 Port 20 Functions (cont'd)

Ball	Symbol	Ctrl.	Buffer Type	Function
K25	P20.11	I	FAST / PU1 / VEXT / ES	**General-purpose input**
	GTM_TIM3_IN7_6			**Mux input channel 7 of TIM module 3**
	GTM_TIM2_IN7_6			**Mux input channel 7 of TIM module 2**
	QSPI0_SCLKA			**Slave SPI clock inputs**
	SDMMC0_DAT3_IN			**read data in**
	P20.11	O0		**General-purpose output**
	GTM_TOUT67	O1		**GTM muxed output**
	—	O2		**Reserved**
	QSPI0_SCLK	O3		**Master SPI clock output**
	—	O4		**Reserved**
	—	O5		**Reserved**
	—	O6		**Reserved**
	CCU61_COUT60	O7		**T12 PWM channel 60**
	IOM_MON1_11			**Monitor input 1**
	IOM_REF1_10			**Reference input 1**
	SDMMC0_DAT3	O		**write data out**
J24	P20.12	I	FAST / PU1 / VEXT / ES	**General-purpose input**
	GTM_TIM3_IN0_5			**Mux input channel 0 of TIM module 3**
	GTM_TIM2_IN0_5			**Mux input channel 0 of TIM module 2**
	QSPI0_MRSTA			**Master SPI data input**
	SDMMC0_DAT4_IN			**read data in**
	IOM_PIN_13			**GPIO pad input to FPC**
	P20.12	O0		**General-purpose output**
	GTM_TOUT68	O1		**GTM muxed output**
	IOM_MON0_13			**Monitor input 0**
	—	O2		**Reserved**
	QSPI0_MRST	O3		**Slave SPI data output**
	IOM_MON2_0			**Monitor input 2**
	IOM_REF2_0			**Reference input 2**
	QSPI0_MTSR	O4		**Master SPI data output**
	—	O5		**Reserved**
	—	O6		**Reserved**
	CCU61_COUT61	O7		**T12 PWM channel 61**
	IOM_MON1_12			**Monitor input 1**
	IOM_REF1_9			**Reference input 1**
	SDMMC0_DAT4	O		**write data out**

Downloaded by IFXDMZ|par-zengzhe 12/02/2019 11:04:31

Table 2-10 Port 20 Functions (cont'd)

Ball	Symbol	Ctrl.	Buffer Type	Function
J25	P20.13	I	FAST / PU1 / VEXT / ES	**General-purpose input**
	GTM_TIM3_IN1_4			**Mux input channel 1 of TIM module 3**
	GTM_TIM2_IN1_4			**Mux input channel 1 of TIM module 2**
	QSPI0_SLSIA			**Slave select input**
	SDMMC0_DAT5_IN			**read data in**
	IOM_PIN_14			**GPIO pad input to FPC**
	P20.13	O0		**General-purpose output**
	GTM_TOUT69	O1		**GTM muxed output**
	IOM_MON0_14			**Monitor input 0**
	—	O2		**Reserved**
	QSPI0_SLSO2	O3		**Master slave select output**
	QSPI1_SLSO2	O4		**Master slave select output**
	QSPI0_SCLK	O5		**Master SPI clock output**
	—	O6		**Reserved**
	CCU61_COUT62	O7		**T12 PWM channel 62**
	IOM_MON1_13			**Monitor input 1**
	IOM_REF1_8			**Reference input 1**
	SDMMC0_DAT5	O		**write data out**
H25	P20.14	I	FAST / PU1 / VEXT / ES	**General-purpose input**
	GTM_TIM3_IN2_4			**Mux input channel 2 of TIM module 3**
	GTM_TIM2_IN2_4			**Mux input channel 2 of TIM module 2**
	QSPI0_MTSRA			**Save SPI data input**
	SDMMC0_DAT6_IN			**read data in**
	IOM_PIN_15			**GPIO pad input to FPC**
	P20.14	O0		**General-purpose output**
	GTM_TOUT70	O1		**GTM muxed output**
	IOM_MON0_15			**Monitor input 0**
	—	O2		**Reserved**
	QSPI0_MTSR	O3		**Master SPI data output**
	—	O4		**Reserved**
	—	O5		**Reserved**
	—	O6		**Reserved**
	—	O7		**Reserved**
	SDMMC0_DAT6	O		**write data out**

Downloaded by IFXDMZ|par-zengzhe 12/02/2019 11:04:31

Table 2-11 Port 21 Functions

Ball	Symbol	Ctrl.	Buffer Type	Function
R22	P21.0	I	LVDS_RX / FAST / PU1 / VEXT / ES	**General-purpose input**
	GTM_TIM4_IN0_11			**Mux input channel 0 of TIM module 4**
	GTM_TIM3_IN4_6			**Mux input channel 4 of TIM module 3**
	GTM_TIM2_IN4_6			**Mux input channel 4 of TIM module 2**
	QSPI4_MRSTDN			**Master SPI data input (LVDS N line)**
	DMU_FDEST			
	ASCLIN11_ARXC			**Receive input**
	HSCT1_RXDN			**Rx data**
	P21.0	O0		**General-purpose output**
	GTM_TOUT51	O1		**GTM muxed output**
	ASCLIN11_ATX	O2		**Transmit output**
	—	O3		**Reserved**
	—	O4		**Reserved**
	—	O5		**Reserved**
	—	O6		**Reserved**
	—	O7		**Reserved**
	HSM_HSM1	O		**Pin Output Value**
P22	P21.1	I	LVDS_RX / FAST / PU1 / VEXT / ES	**General-purpose input**
	GTM_TIM4_IN1_13			**Mux input channel 1 of TIM module 4**
	GTM_TIM3_IN5_6			**Mux input channel 5 of TIM module 3**
	GTM_TIM2_IN5_6			**Mux input channel 5 of TIM module 2**
	QSPI4_MRSTDP			**Master SPI data input (LVDS P line)**
	ASCLIN11_ARXD			**Receive input**
	HSCT1_RXDP			**Rx data**
	GTM_DTMA4_1			**CDTM4_DTM4**
	P21.1	O0		**General-purpose output**
	GTM_TOUT52	O1		**GTM muxed output**
	—	O2		**Reserved**
	—	O3		**Reserved**
	—	O4		**Reserved**
	—	O5		**Reserved**
	—	O6		**Reserved**
	—	O7		**Reserved**
	HSM_HSM2	O		**Pin Output Value**

Downloaded by IFXDMZlpar-zengzhe 12/02/2019 11:04:31

Table 2-11 Port 21 Functions (cont'd)

Ball	Symbol	Ctrl.	Buffer Type	Function
R24	P21.2	I	LVDS_RX / FAST / PU1 / VEXT / ES	**General-purpose input**
	GTM_TIM5_IN4_11			**Mux input channel 4 of TIM module 5**
	GTM_TIM1_IN0_7			**Mux input channel 0 of TIM module 1**
	GTM_TIM0_IN0_7			**Mux input channel 0 of TIM module 0**
	QSPI2_MRSTCN			**Master SPI data input (LVDS N line)**
	SCU_EMGSTOP_PORT_B			**Emergency stop Port Pin B input request**
	ASCLIN3_ARXGN			**Differential Receive input (low active)**
	HSCT0_RXDN			**Rx data**
	QSPI4_MRSTCN			**Master SPI data input (LVDS N line)**
	ASCLIN11_ARXE			**Receive input**
	GTM_DTMA1_0			**CDTM1_DTM4**
	P21.2	O0		**General-purpose output**
	GTM_TOUT53	O1		**GTM muxed output**
	ASCLIN3_ASLSO	O2		**Slave select signal output**
	—	O3		**Reserved**
	—	O4		**Reserved**
	GETH_MDC	O5		**MDIO clock**
	—	O6		**Reserved**
	—	O7		**Reserved**
P24	P21.3	I	LVDS_RX / FAST / PU1 / VEXT / ES	**General-purpose input**
	GTM_TIM5_IN5_12			**Mux input channel 5 of TIM module 5**
	GTM_TIM1_IN1_6			**Mux input channel 1 of TIM module 1**
	GTM_TIM0_IN1_6			**Mux input channel 1 of TIM module 0**
	QSPI2_MRSTCP			**Master SPI data input (LVDS P line)**
	ASCLIN3_ARXGP			**Differential Receive input (high active)**
	GETH_MDIOD			**MDIO Input**
	HSCT0_RXDP			**Rx data**
	QSPI4_MRSTCP			**Master SPI data input (LVDS P line)**
	P21.3	O0		**General-purpose output**
	GTM_TOUT54	O1		**GTM muxed output**
	ASCLIN11_ASCLK	O2		**Shift clock output**
	—	O3		**Reserved**
	—	O4		**Reserved**
	—	O5		**Reserved**
	—	O6		**Reserved**
	—	O7		**Reserved**
	GETH_MDIO	O		**MDIO Output**

Downloaded by IFXDMZ|par-zengzhe 12/02/2019 11:04:31

Table 2-11 Port 21 Functions (cont'd)

Ball	Symbol	Ctrl.	Buffer Type	Function
R25	P21.4	I	LVDS_TX / FAST / PU1 / VEXT / ES6	**General-purpose input**
	GTM_TIM5_IN6_12			**Mux input channel 6 of TIM module 5**
	GTM_TIM1_IN2_6			**Mux input channel 2 of TIM module 1**
	GTM_TIM0_IN2_6			**Mux input channel 2 of TIM module 0**
	P21.4	O0		**General-purpose output**
	GTM_TOUT55	O1		**GTM muxed output**
	ASCLIN11_ASLSO	O2		**Slave select signal output**
	—	O3		**Reserved**
	—	O4		**Reserved**
	—	O5		**Reserved**
	—	O6		**Reserved**
	—	O7		**Reserved**
	HSCT0_TXDN	O		**Tx data**
P25	P21.5	I	LVDS_TX / FAST / PU1 / VEXT / ES6	**General-purpose input**
	GTM_TIM5_IN7_11			**Mux input channel 7 of TIM module 5**
	GTM_TIM1_IN3_6			**Mux input channel 3 of TIM module 1**
	GTM_TIM0_IN3_6			**Mux input channel 3 of TIM module 0**
	ASCLIN11_ARXF			**Receive input**
	P21.5	O0		**General-purpose output**
	GTM_TOUT56	O1		**GTM muxed output**
	ASCLIN3_ASCLK	O2		**Shift clock output**
	ASCLIN11_ATX	O3		**Transmit output**
	—	O4		**Reserved**
	—	O5		**Reserved**
	—	O6		**Reserved**
	—	O7		**Reserved**
	HSCT0_TXDP	O		**Tx data**

Downloaded by IFXDMZ|par-zengzhe 12/02/2019 11:04:31

Table 2-11 Port 21 Functions (cont'd)

Ball	Symbol	Ctrl.	Buffer Type	Function
N22	P21.6/TDI	I	FAST / PD / PU2 / VEXT / ES3	**General-purpose input** PD during Reset and in DAP/DAPE or JTAG mode. After Reset release and when not in DAP/DAPE or JTAG mode: PU. In Standby mode: HighZ.
	GTM_TIM4_IN2_12			**Mux input channel 2 of TIM module 4**
	GTM_TIM1_IN4_8			**Mux input channel 4 of TIM module 1**
	GTM_TIM0_IN4_8			**Mux input channel 4 of TIM module 0**
	GPT120_T5EUDA			**Count direction control input of timer T5**
	ASCLIN3_ARXF			**Receive input**
	CBS_TGI2			**Trigger input**
	TDI			**JTAG Module Data Input**
	P21.6	O0		**General-purpose output**
	GTM_TOUT57	O1		**GTM muxed output**
	ASCLIN3_ASLSO	O2		**Slave select signal output**
	—	O3		**Reserved**
	—	O4		**Reserved**
	—	O5		**Reserved**
	—	O6		**Reserved**
	GPT120_T3OUT	O7		**External output for overflow/underflow detection of core timer T3**
	CBS_TGO2	O		**Trigger output**
	DAP3	I/O		**DAP: DAP3 Data I/O**
	DAPE1	I/O		**DAPE: DAPE1 Data I/O**

Downloaded by IFXDMZlpar-zengzhe 12/02/2019 11:04:31

Table 2-11 Port 21 Functions (cont'd)

Ball	Symbol	Ctrl.	Buffer Type	Function
N21	P21.7/TDO	I	FAST / PU2 / VEXT / ES4	**General-purpose input**
	GTM_TIM4_IN3_12			**Mux input channel 3 of TIM module 4**
	GTM_TIM1_IN5_7			**Mux input channel 5 of TIM module 1**
	GTM_TIM0_IN5_7			**Mux input channel 5 of TIM module 0**
	GPT120_T5INA			**Trigger/gate input of timer T5**
	CBS_TGI3			**Trigger input**
	GETH_RXERB			**Receive Error MII**
	P21.7	O0		**General-purpose output**
	GTM_TOUT58	O1		**GTM muxed output**
	ASCLIN3_ATX	O2		**Transmit output**
	IOM_MON2_15			**Monitor input 2**
	IOM_REF2_15			**Reference input 2**
	ASCLIN3_ASCLK	O3		**Shift clock output**
	—	O4		**Reserved**
	—	O5		**Reserved**
	—	O6		**Reserved**
	GPT120_T6OUT	O7		**External output for overflow/underflow detection of core timer T6**
	CBS_TGO3	O		**Trigger output**
	DAP2	I/O		**DAP: DAP2 Data I/O**
	DAPE2	I/O		**DAPE: DAPE2 Data I/O**
	TDO	O		**JTAG Module Data Output**

Downloaded by IFXDMZlpar-zengzhe 12/02/2019 11:04:31

Table 2-12 Port 22 Functions

Ball	Symbol	Ctrl.	Buffer Type	Function
W25	P22.0	I	LVDS_TX / FAST / PU1 / VEXT / ES6	**General-purpose input**
	GTM_TIM7_IN3_1			**Mux input channel 3 of TIM module 7**
	GTM_TIM1_IN1_7			**Mux input channel 1 of TIM module 1**
	GTM_TIM0_IN1_7			**Mux input channel 1 of TIM module 0**
	QSPI4_MTSRB			**Save SPI data input**
	ASCLIN6_ARXE			**Receive input**
	P22.0	O0		**General-purpose output**
	GTM_TOUT47	O1		**GTM muxed output**
	ASCLIN3_ATXN	O2		**Differential Transmit output (low active)**
	QSPI4_MTSR	O3		**Master SPI data output**
	QSPI4_SCLKN	O4		**Master SPI clock output (LVDS N line)**
	MSC1_FCLN	O5		**Shift-clock inverted part of the differential signal**
	—	O6		**Reserved**
	ASCLIN6_ATX	O7		**Transmit output**
W24	P22.1	I	LVDS_TX / FAST / PU1 / VEXT / ES6	**General-purpose input**
	GTM_TIM7_IN2_1			**Mux input channel 2 of TIM module 7**
	GTM_TIM1_IN0_8			**Mux input channel 0 of TIM module 1**
	GTM_TIM0_IN0_8			**Mux input channel 0 of TIM module 0**
	QSPI4_MRSTB			**Master SPI data input**
	ASCLIN7_ARXE			**Receive input**
	P22.1	O0		**General-purpose output**
	GTM_TOUT48	O1		**GTM muxed output**
	ASCLIN3_ATXP	O2		**Differential Transmit output (high active)**
	QSPI4_MRST	O3		**Slave SPI data output**
	IOM_MON2_4			**Monitor input 2**
	IOM_REF2_4			**Reference input 2**
	QSPI4_SCLKP	O4		**Master SPI clock output (LVDS P line)**
	MSC1_FCLP	O5		**Shift-clock direct part of the differential signal**
	—	O6		**Reserved**
	ASCLIN7_ATX	O7		**Transmit output**

Downloaded by IFXDMZlpar-zengzhe 12/02/2019 11:04:31

Table 2-12 Port 22 Functions (cont'd)

Ball	Symbol	Ctrl.	Buffer Type	Function
Y25	P22.2	I	LVDS_TX / FAST / PU1 / VEXT / ES6	**General-purpose input**
	GTM_TIM7_IN1_1			**Mux input channel 1 of TIM module 7**
	GTM_TIM1_IN3_7			**Mux input channel 3 of TIM module 1**
	GTM_TIM0_IN3_7			**Mux input channel 3 of TIM module 0**
	QSPI4_SLSIB			**Slave select input**
	P22.2	O0		**General-purpose output**
	GTM_TOUT49	O1		**GTM muxed output**
	ASCLIN5_ATX	O2		**Transmit output**
	QSPI4_SLSO3	O3		**Master slave select output**
	QSPI4_MTSRN	O4		**Master SPI data output (LVDS N line)**
	MSC1_SON	O5		**Data output - inverted part of the differential signal**
	—	O6		**Reserved**
	—	O7		**Reserved**
	HSCT1_TXDN	O		**Tx data**
Y24	P22.3	I	LVDS_TX / FAST / PU1 / VEXT / ES6	**General-purpose input**
	GTM_TIM7_IN0_1			**Mux input channel 0 of TIM module 7**
	GTM_TIM1_IN4_4			**Mux input channel 4 of TIM module 1**
	GTM_TIM0_IN4_4			**Mux input channel 4 of TIM module 0**
	QSPI4_SCLKB			**Slave SPI clock inputs**
	ASCLIN5_ARXC			**Receive input**
	P22.3	O0		**General-purpose output**
	GTM_TOUT50	O1		**GTM muxed output**
	—	O2		**Reserved**
	QSPI4_SCLK	O3		**Master SPI clock output**
	QSPI4_MTSRP	O4		**Master SPI data output (LVDS P line)**
	MSC1_SOP	O5		**Data output - direct part of the differential signal**
	—	O6		**Reserved**
	HSPDM_MUTE	O7		**Mute output to tx**
	HSCT1_TXDP	O		**Tx data**

Downloaded by IFXDMZlpar-zengzhe 12/02/2019 11:04:31

Table 2-12 Port 22 Functions (cont'd)

Ball	Symbol	Ctrl.	Buffer Type	Function
W21	P22.4	I	FAST / PU1 / VEXT / ES	**General-purpose input**
	GTM_TIM3_IN0_8			**Mux input channel 0 of TIM module 3**
	ASCLIN7_ARXF			**Receive input**
	GTM_DTMA3_0			**CDTM3_DTM4**
	P22.4	O0		**General-purpose output**
	GTM_TOUT130	O1		**GTM muxed output**
	ASCLIN4_ASLSO	O2		**Slave select signal output**
	—	O3		**Reserved**
	QSPI0_SLSO12	O4		**Master slave select output**
	—	O5		**Reserved**
	CAN13_TXD	O6		**CAN transmit output node 3**
	HSPDM_BS0_OUT	O7		**Bit stream 0 output**
W22	P22.5	I	FAST / PU1 / VEXT / ES	**General-purpose input**
	GTM_TIM3_IN1_7			**Mux input channel 1 of TIM module 3**
	QSPI0_MTSRC			**Save SPI data input**
	CAN13_RXDC			**CAN receive input node 3**
	P22.5	O0		**General-purpose output**
	GTM_TOUT131	O1		**GTM muxed output**
	ASCLIN4_ATX	O2		**Transmit output**
	—	O3		**Reserved**
	QSPI0_MTSR	O4		**Master SPI data output**
	—	O5		**Reserved**
	—	O6		**Reserved**
	HSPDM_BS1_OUT	O7		**Bit stream 1 output**

Downloaded by IFXDMZ|par-zengzhe 12/02/2019 11:04:31

Table 2-12 Port 22 Functions (cont'd)

Ball	Symbol	Ctrl.	Buffer Type	Function
V21	P22.6	I	SLOW / PU1 / VEXT / ES	**General-purpose input**
	GTM_TIM3_IN2_6			**Mux input channel 2 of TIM module 3**
	GTM_TIM2_IN6_14			**Mux input channel 6 of TIM module 2**
	QSPI0_MRSTC			**Master SPI data input**
	ASCLIN4_ARXC			**Receive input**
	P22.6	O0		**General-purpose output**
	GTM_TOUT132	O1		**GTM muxed output**
	—	O2		**Reserved**
	—	O3		**Reserved**
	QSPI0_MRST	O4		**Slave SPI data output**
	IOM_MON2_0			**Monitor input 2**
	IOM_REF2_0			**Reference input 2**
	CAN21_TXD	O5		**CAN transmit output node 1**
	—	O6		**Reserved**
	—	O7		**Reserved**
V22	P22.7	I	SLOW / PU1 / VEXT / ES	**General-purpose input**
	GTM_TIM3_IN3_7			**Mux input channel 3 of TIM module 3**
	QSPI0_SCLKC			**Slave SPI clock inputs**
	CAN21_RXDF			**CAN receive input node 1**
	P22.7	O0		**General-purpose output**
	GTM_TOUT133	O1		**GTM muxed output**
	ASCLIN4_ASCLK	O2		**Shift clock output**
	—	O3		**Reserved**
	QSPI0_SCLK	O4		**Master SPI clock output**
	—	O5		**Reserved**
	—	O6		**Reserved**
	—	O7		**Reserved**

Downloaded by IFXDMZ|par-zengzhe 12/02/2019 11:04:31

Table 2-12 Port 22 Functions (cont'd)

Ball	Symbol	Ctrl.	Buffer Type	Function
U21	P22.8	I	SLOW / PU1 / VEXT / ES	**General-purpose input**
	GTM_TIM5_IN0_4			**Mux input channel 0 of TIM module 5**
	GTM_TIM3_IN4_7			**Mux input channel 4 of TIM module 3**
	QSPI0_SCLKB			**Slave SPI clock inputs**
	P22.8	O0		**General-purpose output**
	GTM_TOUT134	O1		**GTM muxed output**
	ASCLIN5_ASCLK	O2		**Shift clock output**
	—	O3		**Reserved**
	QSPI0_SCLK	O4		**Master SPI clock output**
	CAN22_TXD	O5		**CAN transmit output node 2**
	—	O6		**Reserved**
	—	O7		**Reserved**
U22	P22.9	I	SLOW / PU1 / VEXT / ES	**General-purpose input**
	GTM_TIM5_IN1_10			**Mux input channel 1 of TIM module 5**
	GTM_TIM3_IN5_7			**Mux input channel 5 of TIM module 3**
	QSPI0_MRSTB			**Master SPI data input**
	ASCLIN4_ARXD			**Receive input**
	CAN22_RXDE			**CAN receive input node 2**
	GTM_DTMA3_1			**CDTM3_DTM4**
	P22.9	O0		**General-purpose output**
	GTM_TOUT135	O1		**GTM muxed output**
	—	O2		**Reserved**
	—	O3		**Reserved**
	QSPI0_MRST	O4		**Slave SPI data output**
	IOM_MON2_0			**Monitor input 2**
	IOM_REF2_0			**Reference input 2**
	—	O5		**Reserved**
	—	O6		**Reserved**
	—	O7		**Reserved**

Downloaded by IFXDMZlpar-zengzhe 12/02/2019 11:04:31

Table 2-12 Port 22 Functions (cont'd)

Ball	Symbol	Ctrl.	Buffer Type	Function
T21	P22.10	I	SLOW / PU1 / VEXT / ES	**General-purpose input**
	GTM_TIM5_IN2_8			**Mux input channel 2 of TIM module 5**
	GTM_TIM3_IN6_7			**Mux input channel 6 of TIM module 3**
	QSPI0_MTSRB			**Save SPI data input**
	P22.10	O0		**General-purpose output**
	GTM_TOUT136	O1		**GTM muxed output**
	ASCLIN4_ATX	O2		**Transmit output**
	—	O3		**Reserved**
	QSPI0_MTSR	O4		**Master SPI data output**
	CAN23_TXD	O5		**CAN transmit output node 3**
	—	O6		**Reserved**
	—	O7		**Reserved**
T22	P22.11	I	SLOW / PU1 / VEXT / ES	**General-purpose input**
	GTM_TIM5_IN3_10			**Mux input channel 3 of TIM module 5**
	GTM_TIM3_IN7_7			**Mux input channel 7 of TIM module 3**
	CAN23_RXDE			**CAN receive input node 3**
	P22.11	O0		**General-purpose output**
	GTM_TOUT137	O1		**GTM muxed output**
	ASCLIN4_ASLSO	O2		**Slave select signal output**
	—	O3		**Reserved**
	QSPI0_SLSO10	O4		**Master slave select output**
	—	O5		**Reserved**
	—	O6		**Reserved**
	—	O7		**Reserved**

Downloaded by IFXDMZ|par-zengzhe 12/02/2019 11:04:31

Table 2-13 Port 23 Functions

Ball	Symbol	Ctrl.	Buffer Type	Function
AC25	P23.0	I	SLOW / PU1 / VEXT / ES	**General-purpose input**
	GTM_TIM6_IN7_1			**Mux input channel 7 of TIM module 6**
	GTM_TIM1_IN5_4			**Mux input channel 5 of TIM module 1**
	GTM_TIM0_IN5_4			**Mux input channel 5 of TIM module 0**
	CAN10_RXDC			**CAN receive input node 0**
	P23.0	O0		**General-purpose output**
	GTM_TOUT41	O1		**GTM muxed output**
	—	O2		**Reserved**
	—	O3		**Reserved**
	—	O4		**Reserved**
	—	O5		**Reserved**
	—	O6		**Reserved**
	—	O7		**Reserved**
AB24	P23.1	I	FAST / PU1 / VEXT / ES	**General-purpose input**
	GTM_TIM6_IN6_1			**Mux input channel 6 of TIM module 6**
	GTM_TIM1_IN6_4			**Mux input channel 6 of TIM module 1**
	GTM_TIM0_IN6_4			**Mux input channel 6 of TIM module 0**
	MSC1_SDI0			**Upstream assynchronous input signal**
	ASCLIN6_ARXF			**Receive input**
	P23.1	O0		**General-purpose output**
	GTM_TOUT42	O1		**GTM muxed output**
	ASCLIN1_ARTS	O2		**Ready to send output**
	QSPI4_SLSO6	O3		**Master slave select output**
	GTM_CLK0	O4		**CGM generated clock**
	CAN10_TXD	O5		**CAN transmit output node 0**
	CCU_EXTCLK0	O6		**CCU external clock**
	ASCLIN6_ASCLK	O7		**Shift clock output**

Downloaded by IFXDMZlpar-zengzhe 12/02/2019 11:04:31

Table 2-13 Port 23 Functions (cont'd)

Ball	Symbol	Ctrl.	Buffer Type	Function
AB25	P23.2	I	SLOW / PU1 / VEXT / ES	**General-purpose input**
	GTM_TIM6_IN5_1			**Mux input channel 5 of TIM module 6**
	GTM_TIM1_IN6_5			**Mux input channel 6 of TIM module 1**
	GTM_TIM0_IN6_5			**Mux input channel 6 of TIM module 0**
	ASCLIN7_ARXC			**Receive input**
	P23.2	O0		**General-purpose output**
	GTM_TOUT43	O1		**GTM muxed output**
	—	O2		**Reserved**
	—	O3		**Reserved**
	CAN23_TXD	O4		**CAN transmit output node 3**
	CAN12_TXD	O5		**CAN transmit output node 2**
	—	O6		**Reserved**
	—	O7		**Reserved**
AA24	P23.3	I	SLOW / PU1 / VEXT / ES	**General-purpose input**
	GTM_TIM6_IN4_2			**Mux input channel 4 of TIM module 6**
	GTM_TIM1_IN7_4			**Mux input channel 7 of TIM module 1**
	GTM_TIM0_IN7_4			**Mux input channel 0 of TIM module 0**
	MSC1_INJ0			**Injection signal from port**
	ASCLIN6_ARXA			**Receive input**
	CAN12_RXDC			**CAN receive input node 2**
	CAN23_RXDB			**CAN receive input node 3**
	P23.3	O0		**General-purpose output**
	GTM_TOUT44	O1		**GTM muxed output**
	ASCLIN7_ATX	O2		**Transmit output**
	—	O3		**Reserved**
	—	O4		**Reserved**
	—	O5		**Reserved**
	—	O6		**Reserved**
	—	O7		**Reserved**

Downloaded by IFXDMZ|par-zengzhe 12/02/2019 11:04:31

Table 2-13 Port 23 Functions (cont'd)

Ball	Symbol	Ctrl.	Buffer Type	Function
AA25	P23.4	I	FAST / PU1 / VEXT / ES	**General-purpose input**
	GTM_TIM6_IN3_2			**Mux input channel 3 of TIM module 6**
	GTM_TIM1_IN7_5			**Mux input channel 7 of TIM module 1**
	GTM_TIM0_IN7_5			**Mux input channel 0 of TIM module 0**
	P23.4	O0		**General-purpose output**
	GTM_TOUT45	O1		**GTM muxed output**
	ASCLIN6_ASLSO	O2		**Slave select signal output**
	QSPI4_SLSO5	O3		**Master slave select output**
	—	O4		**Reserved**
	MSC1_EN0	O5		**Chip Select**
	—	O6		**Reserved**
	—	O7		**Reserved**
AA22	P23.5	I	FAST / PU1 / VEXT / ES	**General-purpose input**
	GTM_TIM6_IN2_2			**Mux input channel 2 of TIM module 6**
	GTM_TIM1_IN2_7			**Mux input channel 2 of TIM module 1**
	GTM_TIM0_IN2_7			**Mux input channel 2 of TIM module 0**
	P23.5	O0		**General-purpose output**
	GTM_TOUT46	O1		**GTM muxed output**
	ASCLIN6_ATX	O2		**Transmit output**
	QSPI4_SLSO4	O3		**Master slave select output**
	—	O4		**Reserved**
	MSC1_EN1	O5		**Chip Select**
	CAN22_TXD	O6		**CAN transmit output node 2**
	—	O7		**Reserved**
Y22	P23.6	I	SLOW / PU1 / VEXT / ES	**General-purpose input**
	GTM_TIM6_IN1_2			**Mux input channel 1 of TIM module 6**
	GTM_TIM4_IN2_7			**Mux input channel 2 of TIM module 4**
	GTM_TIM1_IN2_10			**Mux input channel 2 of TIM module 1**
	CAN22_RXDC			**CAN receive input node 2**
	P23.6	O0		**General-purpose output**
	GTM_TOUT138	O1		**GTM muxed output**
	—	O2		**Reserved**
	—	O3		**Reserved**
	QSPI0_SLSO11	O4		**Master slave select output**
	CAN11_TXD	O5		**CAN transmit output node 1**
	—	O6		**Reserved**
	—	O7		**Reserved**

Downloaded by IFXDMZlpar-zengzhe 12/02/2019 11:04:31

Table 2-13 Port 23 Functions (cont'd)

Ball	Symbol	Ctrl.	Buffer Type	Function
Y21	P23.7	I	SLOW / PU1 / VEXT / ES	**General-purpose input**
	GTM_TIM6_IN0_2			**Mux input channel 0 of TIM module 6**
	GTM_TIM4_IN3_7			**Mux input channel 3 of TIM module 4**
	GTM_TIM1_IN3_10			**Mux input channel 3 of TIM module 1**
	CAN11_RXDC			**CAN receive input node 1**
	P23.7	O0		**General-purpose output**
	GTM_TOUT139	O1		**GTM muxed output**
	—	O2		**Reserved**
	—	O3		**Reserved**
	—	O4		**Reserved**
	—	O5		**Reserved**
	—	O6		**Reserved**
	—	O7		**Reserved**

Table 2-14 Port 24 Functions

Ball	Symbol	Ctrl.	Buffer Type	Function
U29	P24.0	I	FAST / PU1 / VEBU / ES	**General-purpose input**
	GTM_TIM6_IN0_6			**Mux input channel 0 of TIM module 6**
	GTM_TIM4_IN0_8			**Mux input channel 0 of TIM module 4**
	EBU_A_IN11			**Address Input**
	P24.0	O0		**General-purpose output**
	GTM_TOUT222	O1		**GTM muxed output**
	—	O2		**Reserved**
	—	O3		**Reserved**
	—	O4		**Reserved**
	—	O5		**Reserved**
	—	O6		**Reserved**
	—	O7		**Reserved**
	EBU_A11	O		**Address Output**

Downloaded by IFXDMZlpar-zengzhe 12/02/2019 11:04:31

Table 2-14 Port 24 Functions (cont'd)

Ball	Symbol	Ctrl.	Buffer Type	Function
U30	P24.1	I	FAST / PU1 / VEBU / ES	**General-purpose input**
	GTM_TIM6_IN1_6			**Mux input channel 1 of TIM module 6**
	GTM_TIM4_IN1_8			**Mux input channel 1 of TIM module 4**
	EBU_A_IN15			**Address Input**
	P24.1	O0		**General-purpose output**
	GTM_TOUT223	O1		**GTM muxed output**
	—	O2		**Reserved**
	—	O3		**Reserved**
	—	O4		**Reserved**
	—	O5		**Reserved**
	—	O6		**Reserved**
	—	O7		**Reserved**
	EBU_A15	O		**Address Output**
T29	P24.2	I	FAST / PU1 / VEBU / ES	**General-purpose input**
	GTM_TIM6_IN2_6			**Mux input channel 2 of TIM module 6**
	GTM_TIM4_IN2_8			**Mux input channel 2 of TIM module 4**
	EBU_A_IN14			**Address Input**
	P24.2	O0		**General-purpose output**
	GTM_TOUT224	O1		**GTM muxed output**
	—	O2		**Reserved**
	—	O3		**Reserved**
	—	O4		**Reserved**
	—	O5		**Reserved**
	—	O6		**Reserved**
	—	O7		**Reserved**
	EBU_A14	O		**Address Output**

Downloaded by IFXDMZ|par-zengzhe 12/02/2019 11:04:31

Table 2-14 Port 24 Functions (cont'd)

Ball	Symbol	Ctrl.	Buffer Type	Function
T30	P24.3	I	FAST / PU1 / VEBU / ES	**General-purpose input**
	GTM_TIM6_IN3_6			**Mux input channel 3 of TIM module 6**
	GTM_TIM4_IN3_8			**Mux input channel 3 of TIM module 4**
	EBU_A_IN13			**Address Input**
	P24.3	O0		**General-purpose output**
	GTM_TOUT225	O1		**GTM muxed output**
	—	O2		**Reserved**
	—	O3		**Reserved**
	—	O4		**Reserved**
	—	O5		**Reserved**
	—	O6		**Reserved**
	—	O7		**Reserved**
	EBU_A13	O		**Address Output**
R29	P24.4	I	FAST / PU1 / VEBU / ES	**General-purpose input**
	GTM_TIM6_IN4_5			**Mux input channel 4 of TIM module 6**
	GTM_TIM4_IN4_7			**Mux input channel 4 of TIM module 4**
	EBU_A_IN9			**Address Input**
	P24.4	O0		**General-purpose output**
	GTM_TOUT226	O1		**GTM muxed output**
	—	O2		**Reserved**
	—	O3		**Reserved**
	—	O4		**Reserved**
	—	O5		**Reserved**
	—	O6		**Reserved**
	—	O7		**Reserved**
	EBU_A9	O		**Address Output**

Downloaded by IFXDMZ|par-zengzhe 12/02/2019 11:04:31

Table 2-14 Port 24 Functions (cont'd)

Ball	Symbol	Ctrl.	Buffer Type	Function
R30	P24.5	I	FAST / PU1 / VEBU / ES	**General-purpose input**
	GTM_TIM6_IN5_5			**Mux input channel 5 of TIM module 6**
	GTM_TIM4_IN5_7			**Mux input channel 5 of TIM module 4**
	EBU_A_IN12			**Address Input**
	P24.5	O0		**General-purpose output**
	GTM_TOUT227	O1		**GTM muxed output**
	—	O2		**Reserved**
	—	O3		**Reserved**
	—	O4		**Reserved**
	—	O5		**Reserved**
	—	O6		**Reserved**
	—	O7		**Reserved**
	EBU_A12	O		**Address Output**
P29	P24.6	I	FAST / PU1 / VEBU / ES	**General-purpose input**
	GTM_TIM6_IN6_5			**Mux input channel 6 of TIM module 6**
	GTM_TIM4_IN6_7			**Mux input channel 6 of TIM module 4**
	EBU_A_IN5			**Address Input**
	P24.6	O0		**General-purpose output**
	GTM_TOUT228	O1		**GTM muxed output**
	—	O2		**Reserved**
	—	O3		**Reserved**
	—	O4		**Reserved**
	—	O5		**Reserved**
	—	O6		**Reserved**
	—	O7		**Reserved**
	EBU_A5	O		**Address Output**

Downloaded by IFXDMZ|par-zengzhe 12/02/2019 11:04:31

Table 2-14 Port 24 Functions (cont'd)

Ball	Symbol	Ctrl.	Buffer Type	Function
P30	P24.7	I	FAST / PU1 / VEBU / ES	**General-purpose input**
	GTM_TIM6_IN7_5			**Mux input channel 7 of TIM module 6**
	GTM_TIM4_IN7_7			**Mux input channel 7 of TIM module 4**
	EBU_A_IN8			**Address Input**
	P24.7	O0		**General-purpose output**
	GTM_TOUT229	O1		**GTM muxed output**
	—	O2		**Reserved**
	—	O3		**Reserved**
	—	O4		**Reserved**
	—	O5		**Reserved**
	—	O6		**Reserved**
	—	O7		**Reserved**
	EBU_A8	O		**Address Output**
N29	P24.8	I	FAST / PU1 / VEBU / ES	**General-purpose input**
	GTM_TIM7_IN0_5			**Mux input channel 0 of TIM module 7**
	GTM_TIM5_IN0_5			**Mux input channel 0 of TIM module 5**
	EBU_A_IN10			**Address Input**
	P24.8	O0		**General-purpose output**
	GTM_TOUT230	O1		**GTM muxed output**
	—	O2		**Reserved**
	—	O3		**Reserved**
	—	O4		**Reserved**
	—	O5		**Reserved**
	—	O6		**Reserved**
	—	O7		**Reserved**
	EBU_A10	O		**Address Output**

Downloaded by IFXDMZ|par-zengzhe 12/02/2019 11:04:31

Table 2-14 Port 24 Functions (cont'd)

Ball	Symbol	Ctrl.	Buffer Type	Function
N30	P24.9	I	FAST / PU1 / VEBU / ES	**General-purpose input**
	GTM_TIM7_IN1_5			**Mux input channel 1 of TIM module 7**
	GTM_TIM5_IN1_6			**Mux input channel 1 of TIM module 5**
	EBU_A_IN6			**Address Input**
	P24.9	O0		**General-purpose output**
	GTM_TOUT231	O1		**GTM muxed output**
	—	O2		**Reserved**
	—	O3		**Reserved**
	—	O4		**Reserved**
	—	O5		**Reserved**
	—	O6		**Reserved**
	—	O7		**Reserved**
	EBU_A6	O		**Address Output**
M29	P24.10	I	FAST / PU1 / VEBU / ES	**General-purpose input**
	GTM_TIM7_IN2_4			**Mux input channel 2 of TIM module 7**
	GTM_TIM5_IN2_5			**Mux input channel 2 of TIM module 5**
	EBU_A_IN4			**Address Input**
	P24.10	O0		**General-purpose output**
	GTM_TOUT232	O1		**GTM muxed output**
	—	O2		**Reserved**
	—	O3		**Reserved**
	—	O4		**Reserved**
	—	O5		**Reserved**
	—	O6		**Reserved**
	—	O7		**Reserved**
	EBU_A4	O		**Address Output**

Downloaded by IFXDMZ|par-zengzhe 12/02/2019 11:04:31

Table 2-14 Port 24 Functions (cont'd)

Ball	Symbol	Ctrl.	Buffer Type	Function
M30	P24.11	I	FAST / PU1 / VEBU / ES	**General-purpose input**
	GTM_TIM7_IN3_4			**Mux input channel 3 of TIM module 7**
	GTM_TIM5_IN3_6			**Mux input channel 3 of TIM module 5**
	EBU_A_IN3			**Address Input**
	P24.11	O0		**General-purpose output**
	GTM_TOUT233	O1		**GTM muxed output**
	—	O2		**Reserved**
	—	O3		**Reserved**
	—	O4		**Reserved**
	—	O5		**Reserved**
	—	O6		**Reserved**
	—	O7		**Reserved**
	EBU_A3	O		**Address Output**
L29	P24.12	I	FAST / PU1 / VEBU / ES	**General-purpose input**
	GTM_TIM7_IN4_3			**Mux input channel 4 of TIM module 7**
	GTM_TIM5_IN4_6			**Mux input channel 4 of TIM module 5**
	EBU_A_IN1			**Address Input**
	P24.12	O0		**General-purpose output**
	GTM_TOUT234	O1		**GTM muxed output**
	—	O2		**Reserved**
	—	O3		**Reserved**
	—	O4		**Reserved**
	—	O5		**Reserved**
	—	O6		**Reserved**
	—	O7		**Reserved**
	EBU_A1	O		**Address Output**

Downloaded by IFXDMZ|par-zengzhe 12/02/2019 11:04:31

Table 2-14 Port 24 Functions (cont'd)

Ball	Symbol	Ctrl.	Buffer Type	Function
L30	P24.13	I	FAST / PU1 / VEBU / ES	**General-purpose input**
	GTM_TIM7_IN5_3			**Mux input channel 5 of TIM module 7**
	GTM_TIM5_IN5_6			**Mux input channel 5 of TIM module 5**
	EBU_A_IN2			**Address Input**
	P24.13	O0		**General-purpose output**
	GTM_TOUT235	O1		**GTM muxed output**
	—	O2		**Reserved**
	—	O3		**Reserved**
	—	O4		**Reserved**
	—	O5		**Reserved**
	—	O6		**Reserved**
	—	O7		**Reserved**
	EBU_A2	O		**Address Output**
K29	P24.14	I	FAST / PU1 / VEBU / ES	**General-purpose input**
	GTM_TIM7_IN7_3			**Mux input channel 7 of TIM module 7**
	GTM_TIM7_IN6_3			**Mux input channel 6 of TIM module 7**
	GTM_TIM5_IN6_6			**Mux input channel 6 of TIM module 5**
	EBU_A_IN0			**Address Input**
	P24.14	O0		**General-purpose output**
	GTM_TOUT236	O1		**GTM muxed output**
	—	O2		**Reserved**
	—	O3		**Reserved**
	—	O4		**Reserved**
	—	O5		**Reserved**
	—	O6		**Reserved**
	—	O7		**Reserved**
	EBU_A0	O		**Address Output**

Downloaded by IFXDMZ|par-zengzhe 12/02/2019 11:04:31

Table 2-14 Port 24 Functions (cont'd)

Ball	Symbol	Ctrl.	Buffer Type	Function
K30	P24.15	I	FAST / PU1 / VEBU / ES	**General-purpose input**
	GTM_TIM7_IN7_2			**Mux input channel 7 of TIM module 7**
	GTM_TIM5_IN7_5			**Mux input channel 7 of TIM module 5**
	EBU_A_IN7			**Address Input**
	P24.15	O0		**General-purpose output**
	GTM_TOUT237	O1		**GTM muxed output**
	—	O2		**Reserved**
	—	O3		**Reserved**
	—	O4		**Reserved**
	—	O5		**Reserved**
	—	O6		**Reserved**
	—	O7		**Reserved**
	EBU_A7	O		**Address Output**

Table 2-15 Port 25 Functions

Ball	Symbol	Ctrl.	Buffer Type	Function
AG30	P25.0	I	FAST / PU1 / VEBU / ES	**General-purpose input**
	GTM_TIM6_IN0_7			**Mux input channel 0 of TIM module 6**
	GTM_TIM3_IN0_12			**Mux input channel 0 of TIM module 3**
	P25.0	O0		**General-purpose output**
	GTM_TOUT206	O1		**GTM muxed output**
	—	O2		**Reserved**
	—	O3		**Reserved**
	—	O4		**Reserved**
	—	O5		**Reserved**
	—	O6		**Reserved**
	—	O7		**Reserved**
	EBU_BFCLKO	O		**Burst Flash Clock Output**

Downloaded by IFXDMZlpar-zengzhe 12/02/2019 11:04:31

Table 2-15 Port 25 Functions (cont'd)

Ball	Symbol	Ctrl.	Buffer Type	Function
AF30	P25.1	I	FAST / PU1 / VEBU / ES	**General-purpose input**
	GTM_TIM6_IN1_7			**Mux input channel 1 of TIM module 6**
	GTM_TIM3_IN1_11			**Mux input channel 1 of TIM module 3**
	EBU_RD_FDBK			**Read Feedback**
	P25.1	O0		**General-purpose output**
	GTM_TOUT207	O1		**GTM muxed output**
	—	O2		**Reserved**
	—	O3		**Reserved**
	—	O4		**Reserved**
	—	O5		**Reserved**
	—	O6		**Reserved**
	—	O7		**Reserved**
	EBU_RD	O		**Read Control**
AF29	P25.2	I	FAST / PU1 / VEBU / ES	**General-purpose input**
	GTM_TIM6_IN2_7			**Mux input channel 2 of TIM module 6**
	GTM_TIM3_IN2_9			**Mux input channel 2 of TIM module 3**
	EBU_WR_FDBK			**Write Feedback**
	P25.2	O0		**General-purpose output**
	GTM_TOUT208	O1		**GTM muxed output**
	—	O2		**Reserved**
	—	O3		**Reserved**
	—	O4		**Reserved**
	—	O5		**Reserved**
	—	O6		**Reserved**
	—	O7		**Reserved**
	EBU_WR	O		**Write Control**

Downloaded by IFXDMZ|par-zengzhe 12/02/2019 11:04:31

Table 2-15 Port 25 Functions (cont'd)

Ball	Symbol	Ctrl.	Buffer Type	Function
AE30	P25.3	I	FAST / PU1 / VEBU / ES	**General-purpose input**
	GTM_TIM6_IN3_7			**Mux input channel 3 of TIM module 6**
	GTM_TIM3_IN3_9			**Mux input channel 3 of TIM module 3**
	EBU_CS_FDBK2			**Chip Select Feedback**
	P25.3	O0		**General-purpose output**
	GTM_TOUT209	O1		**GTM muxed output**
	—	O2		**Reserved**
	—	O3		**Reserved**
	—	O4		**Reserved**
	—	O5		**Reserved**
	—	O6		**Reserved**
	EBU_BAA	O7		**Burst Address Advance**
	EBU_CS2	O		**Chip Select**
AE29	P25.4	I	FAST / PU1 / VEBU / ES	**General-purpose input**
	GTM_TIM6_IN4_6			**Mux input channel 4 of TIM module 6**
	GTM_TIM3_IN4_10			**Mux input channel 4 of TIM module 3**
	EBU_CS_FDBK1			**Chip Select Feedback**
	P25.4	O0		**General-purpose output**
	GTM_TOUT210	O1		**GTM muxed output**
	—	O2		**Reserved**
	—	O3		**Reserved**
	—	O4		**Reserved**
	—	O5		**Reserved**
	—	O6		**Reserved**
	—	O7		**Reserved**
	EBU_CS1	O		**Chip Select**

Downloaded by IFXDMZ|par-zengzhe 12/02/2019 11:04:31

Table 2-15 Port 25 Functions (cont'd)

Ball	Symbol	Ctrl.	Buffer Type	Function
AD30	P25.5	I	FAST / PU1 / VEBU / ES	**General-purpose input**
	GTM_TIM6_IN5_6			**Mux input channel 5 of TIM module 6**
	GTM_TIM3_IN5_11			**Mux input channel 5 of TIM module 3**
	EBU_CS_FDBK0			**Chip Select Feedback**
	P25.5	O0		**General-purpose output**
	GTM_TOUT211	O1		**GTM muxed output**
	—	O2		**Reserved**
	—	O3		**Reserved**
	—	O4		**Reserved**
	—	O5		**Reserved**
	—	O6		**Reserved**
	—	O7		**Reserved**
	EBU_CS0	O		**Chip Select**
W29	P25.6	I	FAST / PU1 / VEBU / ES	**General-purpose input**
	GTM_TIM6_IN6_6			**Mux input channel 6 of TIM module 6**
	GTM_TIM3_IN6_14			**Mux input channel 6 of TIM module 3**
	EBU_WAIT			**Wait Input**
	P25.6	O0		**General-purpose output**
	GTM_TOUT212	O1		**GTM muxed output**
	—	O2		**Reserved**
	—	O3		**Reserved**
	—	O4		**Reserved**
	—	O5		**Reserved**
	—	O6		**Reserved**
	—	O7		**Reserved**
AD29	P25.7	I	FAST / PU1 / VEBU / ES	**General-purpose input**
	GTM_TIM6_IN7_6			**Mux input channel 7 of TIM module 6**
	GTM_TIM3_IN7_10			**Mux input channel 7 of TIM module 3**
	EBU_ADV_FDBK			**ADV Control Signal Feedback**
	P25.7	O0		**General-purpose output**
	GTM_TOUT213	O1		**GTM muxed output**
	—	O2		**Reserved**
	—	O3		**Reserved**
	—	O4		**Reserved**
	—	O5		**Reserved**
	—	O6		**Reserved**
	—	O7		**Reserved**
	EBU_ADV	O		**Address Valid Control Signal**

Downloaded by IFXDMZ|par-zengzhe 12/02/2019 11:04:31

Table 2-15 Port 25 Functions (cont'd)

Ball	Symbol	Ctrl.	Buffer Type	Function
AC29	P25.8	I	FAST / PU1 / VEBU / ES	**General-purpose input**
	GTM_TIM7_IN0_6			**Mux input channel 0 of TIM module 7**
	GTM_TIM4_IN0_9			**Mux input channel 0 of TIM module 4**
	P25.8	O0		**General-purpose output**
	GTM_TOUT214	O1		**GTM muxed output**
	—	O2		**Reserved**
	—	O3		**Reserved**
	—	O4		**Reserved**
	EBU_A23	O5		**Address Output**
	—	O6		**Reserved**
	—	O7		**Reserved**
	EBU_BC0	O		**Byte Control**
AC30	P25.9	I	FAST / PU1 / VEBU / ES	**General-purpose input**
	GTM_TIM7_IN1_6			**Mux input channel 1 of TIM module 7**
	GTM_TIM4_IN1_9			**Mux input channel 1 of TIM module 4**
	P25.9	O0		**General-purpose output**
	GTM_TOUT215	O1		**GTM muxed output**
	—	O2		**Reserved**
	—	O3		**Reserved**
	—	O4		**Reserved**
	EBU_A22	O5		**Address Output**
	—	O6		**Reserved**
	—	O7		**Reserved**
	EBU_BC1	O		**Byte Control**
AB29	P25.10	I	FAST / PU1 / VEBU / ES	**General-purpose input**
	GTM_TIM7_IN2_5			**Mux input channel 2 of TIM module 7**
	GTM_TIM4_IN2_9			**Mux input channel 2 of TIM module 4**
	P25.10	O0		**General-purpose output**
	GTM_TOUT216	O1		**GTM muxed output**
	—	O2		**Reserved**
	—	O3		**Reserved**
	—	O4		**Reserved**
	EBU_A21	O5		**Address Output**
	—	O6		**Reserved**
	—	O7		**Reserved**
	EBU_BC2	O		**Byte Control**

Downloaded by IFXDMZ|par-zengzhe 12/02/2019 11:04:31

Table 2-15 Port 25 Functions (cont'd)

Ball	Symbol	Ctrl.	Buffer Type	Function
AB30	P25.11	I	FAST / PU1 / VEBU / ES	**General-purpose input**
	GTM_TIM7_IN3_5			**Mux input channel 3 of TIM module 7**
	GTM_TIM4_IN3_9			**Mux input channel 3 of TIM module 4**
	P25.11	O0		**General-purpose output**
	GTM_TOUT217	O1		**GTM muxed output**
	—	O2		**Reserved**
	—	O3		**Reserved**
	—	O4		**Reserved**
	EBU_A20	O5		**Address Output**
	—	O6		**Reserved**
	—	O7		**Reserved**
	EBU_BC3	O		**Byte Control**
AA29	P25.12	I	FAST / PU1 / VEBU / ES	**General-purpose input**
	GTM_TIM7_IN4_4			**Mux input channel 4 of TIM module 7**
	GTM_TIM4_IN4_8			**Mux input channel 4 of TIM module 4**
	P25.12	O0		**General-purpose output**
	GTM_TOUT218	O1		**GTM muxed output**
	—	O2		**Reserved**
	—	O3		**Reserved**
	—	O4		**Reserved**
	—	O5		**Reserved**
	—	O6		**Reserved**
	—	O7		**Reserved**
	EBU_A19	O		**Address Output**
AA30	P25.13	I	FAST / PU1 / VEBU / ES	**General-purpose input**
	GTM_TIM7_IN5_4			**Mux input channel 5 of TIM module 7**
	GTM_TIM4_IN5_8			**Mux input channel 5 of TIM module 4**
	P25.13	O0		**General-purpose output**
	GTM_TOUT219	O1		**GTM muxed output**
	—	O2		**Reserved**
	—	O3		**Reserved**
	—	O4		**Reserved**
	—	O5		**Reserved**
	—	O6		**Reserved**
	—	O7		**Reserved**
	EBU_A17	O		**Address Output**

Downloaded by IFXDMZ|par-zengzhe 12/02/2019 11:04:31

Table 2-15 Port 25 Functions (cont'd)

Ball	Symbol	Ctrl.	Buffer Type	Function
Y29	P25.14	I	FAST / PU1 / VEBU / ES	**General-purpose input**
	GTM_TIM7_IN6_4			**Mux input channel 6 of TIM module 7**
	GTM_TIM4_IN6_8			**Mux input channel 6 of TIM module 4**
	P25.14	O0		**General-purpose output**
	GTM_TOUT220	O1		**GTM muxed output**
	—	O2		**Reserved**
	—	O3		**Reserved**
	—	O4		**Reserved**
	—	O5		**Reserved**
	—	O6		**Reserved**
	—	O7		**Reserved**
	EBU_A18	O		**Address Output**
Y30	P25.15	I	FAST / PU1 / VEBU / ES	**General-purpose input**
	GTM_TIM4_IN7_8			**Mux input channel 7 of TIM module 4**
	P25.15	O0		**General-purpose output**
	GTM_TOUT221	O1		**GTM muxed output**
	—	O2		**Reserved**
	—	O3		**Reserved**
	—	O4		**Reserved**
	—	O5		**Reserved**
	—	O6		**Reserved**
	—	O7		**Reserved**
	EBU_A16	O		**Address Output**

Downloaded by IFXDMZ|par-zengzhe 12/02/2019 11:04:31

Table 2-16 Port 26 Functions

Ball	Symbol	Ctrl.	Buffer Type	Function
AG29	P26.0	I	SLOW / PU1 / VEBU / ES	**General-purpose input**
	GTM_TIM6_IN6_9			**Mux input channel 6 of TIM module 6**
	GTM_TIM3_IN6_11			**Mux input channel 6 of TIM module 3**
	EBU_BFCLKI			**Burst Flash Clock Feedback**
	P26.0	O0		**General-purpose output**
	GTM_TOUT212	O1		**GTM muxed output**
	—	O2		**Reserved**
	—	O3		**Reserved**
	—	O4		**Reserved**
	—	O5		**Reserved**
	—	O6		**Reserved**
	—	O7		**Reserved**

Table 2-17 Port 30 Functions

Ball	Symbol	Ctrl.	Buffer Type	Function
AJ21	P30.0	I	FAST / PU1 / VEBU / ES	**General-purpose input**
	GTM_TIM7_IN0_7			**Mux input channel 0 of TIM module 7**
	GTM_TIM4_IN0_10			**Mux input channel 0 of TIM module 4**
	EBU_AD_IN14			**Data Bus Input**
	P30.0	O0		**General-purpose output**
	GTM_TOUT190	O1		**GTM muxed output**
	—	O2		**Reserved**
	—	O3		**Reserved**
	—	O4		**Reserved**
	—	O5		**Reserved**
	—	O6		**Reserved**
	—	O7		**Reserved**
	EBU_AD14	O		**Data Bus Output**

Downloaded by IFXDMZlpar-zengzhe 12/02/2019 11:04:31

Table 2-17 Port 30 Functions (cont'd)

Ball	Symbol	Ctrl.	Buffer Type	Function
AK21	P30.1	I	FAST / PU1 / VEBU / ES	**General-purpose input**
	GTM_TIM7_IN1_7			**Mux input channel 1 of TIM module 7**
	GTM_TIM4_IN1_10			**Mux input channel 1 of TIM module 4**
	EBU_AD_IN11			**Data Bus Input**
	P30.1	O0		**General-purpose output**
	GTM_TOUT191	O1		**GTM muxed output**
	—	O2		**Reserved**
	—	O3		**Reserved**
	—	O4		**Reserved**
	—	O5		**Reserved**
	—	O6		**Reserved**
	—	O7		**Reserved**
	EBU_AD11	O		**Data Bus Output**
AJ22	P30.2	I	FAST / PU1 / VEBU / ES	**General-purpose input**
	GTM_TIM7_IN2_6			**Mux input channel 2 of TIM module 7**
	GTM_TIM4_IN2_10			**Mux input channel 2 of TIM module 4**
	EBU_AD_IN12			**Data Bus Input**
	P30.2	O0		**General-purpose output**
	GTM_TOUT192	O1		**GTM muxed output**
	—	O2		**Reserved**
	—	O3		**Reserved**
	—	O4		**Reserved**
	—	O5		**Reserved**
	—	O6		**Reserved**
	—	O7		**Reserved**
	EBU_AD12	O		**Data Bus Output**

Downloaded by IFXDMZ|par-zengzhe 12/02/2019 11:04:31

Table 2-17 Port 30 Functions (cont'd)

Ball	Symbol	Ctrl.	Buffer Type	Function
AK22	P30.3	I	FAST / PU1 / VEBU / ES	**General-purpose input**
	GTM_TIM7_IN3_6			**Mux input channel 3 of TIM module 7**
	GTM_TIM4_IN3_10			**Mux input channel 3 of TIM module 4**
	EBU_AD_IN15			**Data Bus Input**
	P30.3	O0		**General-purpose output**
	GTM_TOUT193	O1		**GTM muxed output**
	—	O2		**Reserved**
	—	O3		**Reserved**
	—	O4		**Reserved**
	—	O5		**Reserved**
	—	O6		**Reserved**
	—	O7		**Reserved**
	EBU_AD15	O		**Data Bus Output**
AJ23	P30.4	I	FAST / PU1 / VEBU / ES	**General-purpose input**
	GTM_TIM7_IN4_5			**Mux input channel 4 of TIM module 7**
	GTM_TIM4_IN4_9			**Mux input channel 4 of TIM module 4**
	EBU_AD_IN8			**Data Bus Input**
	P30.4	O0		**General-purpose output**
	GTM_TOUT194	O1		**GTM muxed output**
	—	O2		**Reserved**
	—	O3		**Reserved**
	—	O4		**Reserved**
	—	O5		**Reserved**
	—	O6		**Reserved**
	—	O7		**Reserved**
	EBU_AD8	O		**Data Bus Output**

Downloaded by IFXDMZ|par-zengzhe 12/02/2019 11:04:31

Table 2-17 Port 30 Functions (cont'd)

Ball	Symbol	Ctrl.	Buffer Type	Function
AK23	P30.5	I	FAST / PU1 / VEBU / ES	**General-purpose input**
	GTM_TIM7_IN5_5			**Mux input channel 5 of TIM module 7**
	GTM_TIM4_IN5_9			**Mux input channel 5 of TIM module 4**
	EBU_AD_IN13			**Data Bus Input**
	P30.5	O0		**General-purpose output**
	GTM_TOUT195	O1		**GTM muxed output**
	—	O2		**Reserved**
	—	O3		**Reserved**
	—	O4		**Reserved**
	—	O5		**Reserved**
	—	O6		**Reserved**
	—	O7		**Reserved**
	EBU_AD13	O		**Data Bus Output**
AJ24	P30.6	I	FAST / PU1 / VEBU / ES	**General-purpose input**
	GTM_TIM7_IN6_5			**Mux input channel 6 of TIM module 7**
	GTM_TIM4_IN6_9			**Mux input channel 6 of TIM module 4**
	EBU_AD_IN4			**Data Bus Input**
	P30.6	O0		**General-purpose output**
	GTM_TOUT196	O1		**GTM muxed output**
	—	O2		**Reserved**
	—	O3		**Reserved**
	—	O4		**Reserved**
	—	O5		**Reserved**
	—	O6		**Reserved**
	—	O7		**Reserved**
	EBU_AD4	O		**Data Bus Output**

Downloaded by IFXDMZ|par-zengzhe 12/02/2019 11:04:31

Table 2-17 Port 30 Functions (cont'd)

Ball	Symbol	Ctrl.	Buffer Type	Function
AK24	P30.7	I	FAST / PU1 / VEBU / ES	**General-purpose input**
	GTM_TIM7_IN7_4			**Mux input channel 7 of TIM module 7**
	GTM_TIM4_IN7_9			**Mux input channel 7 of TIM module 4**
	EBU_AD_IN7			**Data Bus Input**
	P30.7	O0		**General-purpose output**
	GTM_TOUT197	O1		**GTM muxed output**
	—	O2		**Reserved**
	—	O3		**Reserved**
	—	O4		**Reserved**
	—	O5		**Reserved**
	—	O6		**Reserved**
	—	O7		**Reserved**
	EBU_AD7	O		**Data Bus Output**
AJ25	P30.8	I	FAST / PU1 / VEBU / ES	**General-purpose input**
	GTM_TIM6_IN0_8			**Mux input channel 0 of TIM module 6**
	GTM_TIM5_IN0_6			**Mux input channel 0 of TIM module 5**
	EBU_AD_IN3			**Data Bus Input**
	P30.8	O0		**General-purpose output**
	GTM_TOUT198	O1		**GTM muxed output**
	—	O2		**Reserved**
	—	O3		**Reserved**
	—	O4		**Reserved**
	—	O5		**Reserved**
	—	O6		**Reserved**
	—	O7		**Reserved**
	EBU_AD3	O		**Data Bus Output**

Downloaded by IFXDMZ|par-zengzhe 12/02/2019 11:04:31

Table 2-17 Port 30 Functions (cont'd)

Ball	Symbol	Ctrl.	Buffer Type	Function
AK25	P30.9	I	FAST / PU1 / VEBU / ES	**General-purpose input**
	GTM_TIM6_IN1_8			**Mux input channel 1 of TIM module 6**
	GTM_TIM5_IN1_7			**Mux input channel 1 of TIM module 5**
	EBU_AD_IN0			**Data Bus Input**
	P30.9	O0		**General-purpose output**
	GTM_TOUT199	O1		**GTM muxed output**
	—	O2		**Reserved**
	—	O3		**Reserved**
	—	O4		**Reserved**
	—	O5		**Reserved**
	—	O6		**Reserved**
	—	O7		**Reserved**
	EBU_AD0	O		**Data Bus Output**
AJ26	P30.10	I	FAST / PU1 / VEBU / ES	**General-purpose input**
	GTM_TIM6_IN2_8			**Mux input channel 2 of TIM module 6**
	GTM_TIM5_IN2_6			**Mux input channel 2 of TIM module 5**
	EBU_AD_IN5			**Data Bus Input**
	P30.10	O0		**General-purpose output**
	GTM_TOUT200	O1		**GTM muxed output**
	—	O2		**Reserved**
	—	O3		**Reserved**
	—	O4		**Reserved**
	—	O5		**Reserved**
	—	O6		**Reserved**
	—	O7		**Reserved**
	EBU_AD5	O		**Data Bus Output**

Downloaded by IFXDMZ|par-zengzhe 12/02/2019 11:04:31

Table 2-17 Port 30 Functions (cont'd)

Ball	Symbol	Ctrl.	Buffer Type	Function
AK26	P30.11	I	FAST / PU1 / VEBU / ES	**General-purpose input**
	GTM_TIM6_IN3_8			**Mux input channel 3 of TIM module 6**
	GTM_TIM5_IN3_7			**Mux input channel 3 of TIM module 5**
	EBU_AD_IN10			**Data Bus Input**
	P30.11	O0		**General-purpose output**
	GTM_TOUT201	O1		**GTM muxed output**
	—	O2		**Reserved**
	—	O3		**Reserved**
	—	O4		**Reserved**
	—	O5		**Reserved**
	—	O6		**Reserved**
	—	O7		**Reserved**
	EBU_AD10	O		**Data Bus Output**
AJ27	P30.12	I	FAST / PU1 / VEBU / ES	**General-purpose input**
	GTM_TIM6_IN4_7			**Mux input channel 4 of TIM module 6**
	GTM_TIM5_IN4_7			**Mux input channel 4 of TIM module 5**
	EBU_AD_IN9			**Data Bus Input**
	P30.12	O0		**General-purpose output**
	GTM_TOUT202	O1		**GTM muxed output**
	—	O2		**Reserved**
	—	O3		**Reserved**
	—	O4		**Reserved**
	—	O5		**Reserved**
	—	O6		**Reserved**
	—	O7		**Reserved**
	EBU_AD9	O		**Data Bus Output**

Downloaded by IFXDMZ|par-zengzhe 12/02/2019 11:04:31

Table 2-17 Port 30 Functions (cont'd)

Ball	Symbol	Ctrl.	Buffer Type	Function
AK27	P30.13	I	FAST / PU1 / VEBU / ES	**General-purpose input**
	GTM_TIM6_IN5_7			**Mux input channel 5 of TIM module 6**
	GTM_TIM5_IN5_7			**Mux input channel 5 of TIM module 5**
	EBU_AD_IN2			**Data Bus Input**
	P30.13	O0		**General-purpose output**
	GTM_TOUT203	O1		**GTM muxed output**
	—	O2		**Reserved**
	—	O3		**Reserved**
	—	O4		**Reserved**
	—	O5		**Reserved**
	—	O6		**Reserved**
	—	O7		**Reserved**
	EBU_AD2	O		**Data Bus Output**
AJ28	P30.14	I	FAST / PU1 / VEBU / ES	**General-purpose input**
	GTM_TIM6_IN6_7			**Mux input channel 6 of TIM module 6**
	GTM_TIM5_IN6_7			**Mux input channel 6 of TIM module 5**
	EBU_AD_IN1			**Data Bus Input**
	P30.14	O0		**General-purpose output**
	GTM_TOUT204	O1		**GTM muxed output**
	—	O2		**Reserved**
	—	O3		**Reserved**
	—	O4		**Reserved**
	—	O5		**Reserved**
	—	O6		**Reserved**
	—	O7		**Reserved**
	EBU_AD1	O		**Data Bus Output**

Downloaded by IFXDMZ|par-zengzhe 12/02/2019 11:04:31

Table 2-17 Port 30 Functions (cont'd)

Ball	Symbol	Ctrl.	Buffer Type	Function
AK28	P30.15	I	FAST / PU1 / VEBU / ES	**General-purpose input**
	GTM_TIM6_IN7_7			**Mux input channel 7 of TIM module 6**
	GTM_TIM5_IN7_6			**Mux input channel 7 of TIM module 5**
	EBU_AD_IN6			**Data Bus Input**
	P30.15	O0		**General-purpose output**
	GTM_TOUT205	O1		**GTM muxed output**
	—	O2		**Reserved**
	—	O3		**Reserved**
	—	O4		**Reserved**
	—	O5		**Reserved**
	—	O6		**Reserved**
	—	O7		**Reserved**
	EBU_AD6	O		**Data Bus Output**

Table 2-18 Port 31 Functions

Ball	Symbol	Ctrl.	Buffer Type	Function
AJ12	P31.0	I	FAST / PU1 / VEBU / ES	**General-purpose input**
	GTM_TIM7_IN0_8			**Mux input channel 0 of TIM module 7**
	GTM_TIM2_IN0_13			**Mux input channel 0 of TIM module 2**
	EBU_AD_IN30			**Data Bus Input**
	P31.0	O0		**General-purpose output**
	GTM_TOUT174	O1		**GTM muxed output**
	—	O2		**Reserved**
	—	O3		**Reserved**
	—	O4		**Reserved**
	—	O5		**Reserved**
	—	O6		**Reserved**
	—	O7		**Reserved**
	EBU_AD30	O		**Data Bus Output**

Downloaded by IFXDMZlpar-zengzhe 12/02/2019 11:04:31

Table 2-18 Port 31 Functions (cont'd)

Ball	Symbol	Ctrl.	Buffer Type	Function
AK12	P31.1	I	FAST / PU1 / VEBU / ES	**General-purpose input**
	GTM_TIM7_IN1_8			**Mux input channel 1 of TIM module 7**
	GTM_TIM2_IN1_9			**Mux input channel 1 of TIM module 2**
	EBU_AD_IN29			**Data Bus Input**
	P31.1	O0		**General-purpose output**
	GTM_TOUT175	O1		**GTM muxed output**
	—	O2		**Reserved**
	—	O3		**Reserved**
	—	O4		**Reserved**
	—	O5		**Reserved**
	—	O6		**Reserved**
	—	O7		**Reserved**
	EBU_AD29	O		**Data Bus Output**
AJ13	P31.2	I	FAST / PU1 / VEBU / ES	**General-purpose input**
	GTM_TIM7_IN2_7			**Mux input channel 2 of TIM module 7**
	GTM_TIM2_IN2_9			**Mux input channel 2 of TIM module 2**
	EBU_AD_IN28			**Data Bus Input**
	P31.2	O0		**General-purpose output**
	GTM_TOUT176	O1		**GTM muxed output**
	—	O2		**Reserved**
	—	O3		**Reserved**
	—	O4		**Reserved**
	—	O5		**Reserved**
	—	O6		**Reserved**
	—	O7		**Reserved**
	EBU_AD28	O		**Data Bus Output**

Downloaded by IFXDMZ|par-zengzhe 12/02/2019 11:04:31

Table 2-18 Port 31 Functions (cont'd)

Ball	Symbol	Ctrl.	Buffer Type	Function
AK13	P31.3	I	FAST / PU1 / VEBU / ES	**General-purpose input**
	GTM_TIM7_IN3_7			**Mux input channel 3 of TIM module 7**
	GTM_TIM2_IN3_14			**Mux input channel 3 of TIM module 2**
	EBU_AD_IN26			**Data Bus Input**
	P31.3	O0		**General-purpose output**
	GTM_TOUT177	O1		**GTM muxed output**
	—	O2		**Reserved**
	—	O3		**Reserved**
	—	O4		**Reserved**
	—	O5		**Reserved**
	—	O6		**Reserved**
	—	O7		**Reserved**
	EBU_AD26	O		**Data Bus Output**
AJ14	P31.4	I	FAST / PU1 / VEBU / ES	**General-purpose input**
	GTM_TIM7_IN4_6			**Mux input channel 4 of TIM module 7**
	GTM_TIM2_IN4_12			**Mux input channel 4 of TIM module 2**
	EBU_AD_IN24			**Data Bus Input**
	P31.4	O0		**General-purpose output**
	GTM_TOUT178	O1		**GTM muxed output**
	—	O2		**Reserved**
	—	O3		**Reserved**
	—	O4		**Reserved**
	—	O5		**Reserved**
	—	O6		**Reserved**
	—	O7		**Reserved**
	EBU_AD24	O		**Data Bus Output**

Downloaded by IFXDMZ|par-zengzhe 12/02/2019 11:04:31

Table 2-18 Port 31 Functions (cont'd)

Ball	Symbol	Ctrl.	Buffer Type	Function
AK14	P31.5	I	FAST / PU1 / VEBU / ES	**General-purpose input**
	GTM_TIM7_IN5_6			**Mux input channel 5 of TIM module 7**
	GTM_TIM2_IN5_13			**Mux input channel 5 of TIM module 2**
	EBU_AD_IN23			**Data Bus Input**
	P31.5	O0		**General-purpose output**
	GTM_TOUT179	O1		**GTM muxed output**
	—	O2		**Reserved**
	—	O3		**Reserved**
	—	O4		**Reserved**
	—	O5		**Reserved**
	—	O6		**Reserved**
	—	O7		**Reserved**
	EBU_AD23	O		**Data Bus Output**
AJ15	P31.6	I	FAST / PU1 / VEBU / ES	**General-purpose input**
	GTM_TIM7_IN6_6			**Mux input channel 6 of TIM module 7**
	GTM_TIM2_IN6_12			**Mux input channel 6 of TIM module 2**
	EBU_AD_IN20			**Data Bus Input**
	P31.6	O0		**General-purpose output**
	GTM_TOUT180	O1		**GTM muxed output**
	—	O2		**Reserved**
	—	O3		**Reserved**
	—	O4		**Reserved**
	—	O5		**Reserved**
	—	O6		**Reserved**
	—	O7		**Reserved**
	EBU_AD20	O		**Data Bus Output**

Downloaded by IFXDMZ|par-zengzhe 12/02/2019 11:04:31

Table 2-18 Port 31 Functions (cont'd)

Ball	Symbol	Ctrl.	Buffer Type	Function
AK15	P31.7	I	FAST / PU1 / VEBU / ES	**General-purpose input**
	GTM_TIM7_IN7_5			**Mux input channel 7 of TIM module 7**
	GTM_TIM2_IN7_14			**Mux input channel 7 of TIM module 2**
	EBU_AD_IN16			**Data Bus Input**
	P31.7	O0		**General-purpose output**
	GTM_TOUT181	O1		**GTM muxed output**
	—	O2		**Reserved**
	—	O3		**Reserved**
	—	O4		**Reserved**
	—	O5		**Reserved**
	—	O6		**Reserved**
	—	O7		**Reserved**
	EBU_AD16	O		**Data Bus Output**
AJ16	P31.8	I	FAST / PU1 / VEBU / ES	**General-purpose input**
	GTM_TIM6_IN0_9			**Mux input channel 0 of TIM module 6**
	GTM_TIM5_IN0_7			**Mux input channel 0 of TIM module 5**
	EBU_AD_IN31			**Data Bus Input**
	SENT_SENT20C			**Receive input channel 20**
	P31.8	O0		**General-purpose output**
	GTM_TOUT182	O1		**GTM muxed output**
	—	O2		**Reserved**
	—	O3		**Reserved**
	—	O4		**Reserved**
	—	O5		**Reserved**
	—	O6		**Reserved**
	—	O7		**Reserved**
	EBU_AD31	O		**Data Bus Output**

Downloaded by IFXDMZ|par-zengzhe 12/02/2019 11:04:31

Table 2-18 Port 31 Functions (cont'd)

Ball	Symbol	Ctrl.	Buffer Type	Function
AK16	P31.9	I	FAST / PU1 / VEBU / ES	**General-purpose input**
	GTM_TIM6_IN1_9			**Mux input channel 1 of TIM module 6**
	GTM_TIM5_IN1_8			**Mux input channel 1 of TIM module 5**
	EBU_AD_IN27			**Data Bus Input**
	SENT_SENT21C			**Receive input channel 21**
	P31.9	O0		**General-purpose output**
	GTM_TOUT183	O1		**GTM muxed output**
	—	O2		**Reserved**
	—	O3		**Reserved**
	—	O4		**Reserved**
	—	O5		**Reserved**
	—	O6		**Reserved**
	—	O7		**Reserved**
	EBU_AD27	O		**Data Bus Output**
AJ17	P31.10	I	FAST / PU1 / VEBU / ES	**General-purpose input**
	GTM_TIM6_IN2_9			**Mux input channel 2 of TIM module 6**
	GTM_TIM5_IN2_7			**Mux input channel 2 of TIM module 5**
	EBU_AD_IN21			**Data Bus Input**
	SENT_SENT22C			**Receive input channel 22**
	P31.10	O0		**General-purpose output**
	GTM_TOUT184	O1		**GTM muxed output**
	—	O2		**Reserved**
	—	O3		**Reserved**
	—	O4		**Reserved**
	—	O5		**Reserved**
	—	O6		**Reserved**
	—	O7		**Reserved**
	EBU_AD21	O		**Data Bus Output**

Downloaded by IFXDMZlpar-zengzhe 12/02/2019 11:04:31

Table 2-18 Port 31 Functions (cont'd)

Ball	Symbol	Ctrl.	Buffer Type	Function
AK17	P31.11	I	FAST / PU1 / VEBU / ES	**General-purpose input**
	GTM_TIM6_IN3_9			**Mux input channel 3 of TIM module 6**
	GTM_TIM5_IN3_8			**Mux input channel 3 of TIM module 5**
	EBU_AD_IN25			**Data Bus Input**
	SENT_SENT23C			**Receive input channel 23**
	P31.11	O0		**General-purpose output**
	GTM_TOUT185	O1		**GTM muxed output**
	—	O2		**Reserved**
	—	O3		**Reserved**
	—	O4		**Reserved**
	—	O5		**Reserved**
	—	O6		**Reserved**
	—	O7		**Reserved**
	EBU_AD25	O		**Data Bus Output**
AJ18	P31.12	I	FAST / PU1 / VEBU / ES	**General-purpose input**
	GTM_TIM6_IN4_8			**Mux input channel 4 of TIM module 6**
	GTM_TIM5_IN4_8			**Mux input channel 4 of TIM module 5**
	EBU_AD_IN19			**Data Bus Input**
	SENT_SENT24C			**Receive input channel 24**
	P31.12	O0		**General-purpose output**
	GTM_TOUT186	O1		**GTM muxed output**
	—	O2		**Reserved**
	—	O3		**Reserved**
	—	O4		**Reserved**
	—	O5		**Reserved**
	—	O6		**Reserved**
	—	O7		**Reserved**
	EBU_AD19	O		**Data Bus Output**

Downloaded by IFXDMZlpar-zengzhe 12/02/2019 11:04:31

Table 2-18 Port 31 Functions (cont'd)

Ball	Symbol	Ctrl.	Buffer Type	Function
AK18	P31.13	I	FAST / PU1 / VEBU / ES	**General-purpose input**
	GTM_TIM6_IN5_8			**Mux input channel 5 of TIM module 6**
	GTM_TIM5_IN5_8			**Mux input channel 5 of TIM module 5**
	EBU_AD_IN22			**Data Bus Input**
	P31.13	O0		**General-purpose output**
	GTM_TOUT187	O1		**GTM muxed output**
	—	O2		**Reserved**
	—	O3		**Reserved**
	—	O4		**Reserved**
	—	O5		**Reserved**
	—	O6		**Reserved**
	—	O7		**Reserved**
	EBU_AD22	O		**Data Bus Output**
AJ19	P31.14	I	FAST / PU1 / VEBU / ES	**General-purpose input**
	GTM_TIM6_IN6_8			**Mux input channel 6 of TIM module 6**
	GTM_TIM5_IN6_8			**Mux input channel 6 of TIM module 5**
	EBU_AD_IN18			**Data Bus Input**
	P31.14	O0		**General-purpose output**
	GTM_TOUT188	O1		**GTM muxed output**
	—	O2		**Reserved**
	—	O3		**Reserved**
	—	O4		**Reserved**
	—	O5		**Reserved**
	—	O6		**Reserved**
	—	O7		**Reserved**
	EBU_AD18	O		**Data Bus Output**

Downloaded by IFXDMZ|par-zengzhe 12/02/2019 11:04:31

Table 2-18 Port 31 Functions (cont'd)

Ball	Symbol	Ctrl.	Buffer Type	Function
AK19	P31.15	I	FAST / PU1 / VEBU / ES	**General-purpose input**
	GTM_TIM6_IN7_8			**Mux input channel 7 of TIM module 6**
	GTM_TIM5_IN7_7			**Mux input channel 7 of TIM module 5**
	EBU_AD_IN17			**Data Bus Input**
	P31.15	O0		**General-purpose output**
	GTM_TOUT189	O1		**GTM muxed output**
	—	O2		**Reserved**
	—	O3		**Reserved**
	—	O4		**Reserved**
	—	O5		**Reserved**
	—	O6		**Reserved**
	—	O7		**Reserved**
	EBU_AD17	O		**Data Bus Output**

Table 2-19 Port 32 Functions

Ball	Symbol	Ctrl.	Buffer Type	Function
AE22	P32.0/VGATE1N	I	SLOW / PU1 / VEXT / ES	**General-purpose input** P32.0 / SMPS mode: analog output. External Pass Device gate control for EVRC
	GTM_TIM3_IN2_5			**Mux input channel 2 of TIM module 3**
	GTM_TIM2_IN2_5			**Mux input channel 2 of TIM module 2**
	P32.0	O0		**General-purpose output**
	GTM_TOUT36	O1		**GTM muxed output**
	—	O2		**Reserved**
	—	O3		**Reserved**
	—	O4		**Reserved**
	—	O5		**Reserved**
	—	O6		**Reserved**
	—	O7		**Reserved**

Downloaded by IFXDMZlpar-zengzhe 12/02/2019 11:04:31

Table 2-19 Port 32 Functions (cont'd)

Ball	Symbol	Ctrl.	Buffer Type	Function
AD22	P32.1/VGATE1P	I	SLOW / PU1 / VEXT / ES	**General-purpose input** P32.1 / External Pass Device gate control for EVRC
	GTM_TIM3_IN3_15			**Mux input channel 3 of TIM module 3**
	P32.1	O0		**General-purpose output**
	GTM_TOUT37	O1		**GTM muxed output**
	—	O2		**Reserved**
	—	O3		**Reserved**
	—	O4		**Reserved**
	—	O5		**Reserved**
	—	O6		**Reserved**
	—	O7		**Reserved**
AE23	P32.2	I	SLOW / PU1 / VEXT / ES	**General-purpose input**
	GTM_TIM1_IN3_8			**Mux input channel 3 of TIM module 1**
	GTM_TIM0_IN3_8			**Mux input channel 3 of TIM module 0**
	CAN03_RXDB			**CAN receive input node 3**
	ASCLIN3_ARXD			**Receive input**
	CAN21_RXDD			**CAN receive input node 1**
	P32.2	O0		**General-purpose output**
	GTM_TOUT38	O1		**GTM muxed output**
	ASCLIN3_ATX	O2		**Transmit output**
	IOM_MON2_15			**Monitor input 2**
	IOM_REF2_15			**Reference input 2**
	—	O3		**Reserved**
	—	O4		**Reserved**
	—	O5		**Reserved**
	PMS_DCDCSYNCO	O6		**DCDC sync output**
	—	O7		**Reserved**

Downloaded by IFXDMZlpar-zengzhe 12/02/2019 11:04:31

Table 2-19 Port 32 Functions (cont'd)

Ball	Symbol	Ctrl.	Buffer Type	Function
AE24	P32.3	I	SLOW / PU1 / VEXT / ES	**General-purpose input**
	GTM_TIM1_IN4_5			**Mux input channel 4 of TIM module 1**
	GTM_TIM0_IN4_5			**Mux input channel 4 of TIM module 0**
	P32.3	O0		**General-purpose output**
	GTM_TOUT39	O1		**GTM muxed output**
	ASCLIN3_ATX	O2		**Transmit output**
	IOM_MON2_15			**Monitor input 2**
	IOM_REF2_15			**Reference input 2**
	—	O3		**Reserved**
	ASCLIN3_ASCLK	O4		**Shift clock output**
	CAN03_TXD	O5		**CAN transmit output node 3**
	IOM_MON2_8			**Monitor input 2**
	IOM_REF2_8			**Reference input 2**
	CAN21_TXD	O6		**CAN transmit output node 1**
	—	O7		**Reserved**
AD23	P32.4	I	FAST / PU1 / VEXT / ES	**General-purpose input**
	GTM_TIM1_IN5_5			**Mux input channel 5 of TIM module 1**
	GTM_TIM0_IN5_5			**Mux input channel 5 of TIM module 0**
	ASCLIN1_ACTSB			**Clear to send input**
	MSC1_SDI2			**Upstream assynchronous input signal**
	P32.4	O0		**General-purpose output**
	GTM_TOUT40	O1		**GTM muxed output**
	—	O2		**Reserved**
	—	O3		**Reserved**
	GTM_CLK1	O4		**CGM generated clock**
	MSC1_EN0	O5		**Chip Select**
	CCU_EXTCLK1	O6		**CCU external clock**
	CCU60_COUT63	O7		**T13 PWM channel 63**
	IOM_MON1_6			**Monitor input 1**
	IOM_REF1_0			**Reference input 1**
	PMS_DCDCSYNCO	O		**DCDC sync output**

Downloaded by IFXDMZ|par-zengzhe 12/02/2019 11:04:31

Table 2-19 Port 32 Functions (cont'd)

Ball	Symbol	Ctrl.	Buffer Type	Function
AA20	P32.5	I	SLOW / PU1 / VEXT / ES	**General-purpose input**
	GTM_TIM5_IN5_9			**Mux input channel 5 of TIM module 5**
	GTM_TIM4_IN1_14			**Mux input channel 1 of TIM module 4**
	GTM_TIM3_IN5_8			**Mux input channel 5 of TIM module 3**
	SENT_SENT10C			**Receive input channel 10**
	P32.5	O0		**General-purpose output**
	GTM_TOUT140	O1		**GTM muxed output**
	ASCLIN2_ATX	O2		**Transmit output**
	IOM_MON2_14			**Monitor input 2**
	IOM_REF2_14			**Reference input 2**
	—	O3		**Reserved**
	—	O4		**Reserved**
	—	O5		**Reserved**
	CAN02_TXD	O6		**CAN transmit output node 2**
	IOM_MON2_7			**Monitor input 2**
	IOM_REF2_7			**Reference input 2**
	—	O7		**Reserved**
AB20	P32.6	I	SLOW / PU1 / VEXT / ES	**General-purpose input**
	GTM_TIM5_IN6_9			**Mux input channel 6 of TIM module 5**
	GTM_TIM4_IN4_15			**Mux input channel 4 of TIM module 4**
	GTM_TIM3_IN6_8			**Mux input channel 6 of TIM module 3**
	CAN02_RXDC			**CAN receive input node 2**
	CBS_TGI4			**Trigger input**
	ASCLIN2_ARXF			**Receive input**
	ASCLIN6_ARXC			**Receive input**
	SENT_SENT11C			**Receive input channel 11**
	P32.6	O0		**General-purpose output**
	GTM_TOUT141	O1		**GTM muxed output**
	—	O2		**Reserved**
	—	O3		**Reserved**
	QSPI2_SLSO12	O4		**Master slave select output**
	CAN22_TXD	O5		**CAN transmit output node 2**
	—	O6		**Reserved**
	—	O7		**Reserved**
	CBS_TGO4	O		**Trigger output**

Downloaded by IFXDMZlpar-zengzhe 12/02/2019 11:04:31

Table 2-19 Port 32 Functions (cont'd)

Ball	Symbol	Ctrl.	Buffer Type	Function
AB21	P32.7	I	SLOW / PU1 / VEXT / ES	**General-purpose input**
	GTM_TIM5_IN7_8			**Mux input channel 7 of TIM module 5**
	GTM_TIM4_IN0_15			**Mux input channel 0 of TIM module 4**
	GTM_TIM3_IN7_8			**Mux input channel 7 of TIM module 3**
	CBS_TGI5			**Trigger input**
	CAN22_RXDB			**CAN receive input node 2**
	SENT_SENT12C			**Receive input channel 12**
	P32.7	O0		**General-purpose output**
	GTM_TOUT142	O1		**GTM muxed output**
	ASCLIN6_ATX	O2		**Transmit output**
	—	O3		**Reserved**
	—	O4		**Reserved**
	—	O5		**Reserved**
	—	O6		**Reserved**
	—	O7		**Reserved**
	CBS_TGO5	O		**Trigger output**

Downloaded by IFXDMZ|par-zengzhe 12/02/2019 11:04:31

Table 2-20 Port 33 Functions

Ball	Symbol	Ctrl.	Buffer Type	Function
AD15	P33.0	I	SLOW / PU1 / VEVRSB / ES5	**General-purpose input**
	GTM_TIM3_IN0_13			**Mux input channel 0 of TIM module 3**
	GTM_TIM1_IN4_6			**Mux input channel 4 of TIM module 1**
	GTM_TIM0_IN4_6			**Mux input channel 4 of TIM module 0**
	EDSADC_ITR0E			**Trigger/Gate input**
	SENT_SENT13C			**Receive input channel 13**
	IOM_PIN_0			**GPIO pad input to FPC**
	GTM_DTMT1_2			**CDTM1_DTM0**
	EVADC_G10CH7	AI		**Analog input channel 7, group 10**
	EVADC_FC7CH0			**Analog input FC channel 7**
	P33.0	O0		**General-purpose output**
	GTM_TOUT22	O1		**GTM muxed output**
	IOM_MON0_0			**Monitor input 0**
	IOM_GTM_0			**GTM-provided inputs to EXOR combiner**
	ASCLIN5_ATX	O2		**Transmit output**
	—	O3		**Reserved**
	—	O4		**Reserved**
	—	O5		**Reserved**
	EVADC_FC2BFLOUT	O6		**Boundary flag output, FC channel 2**
	—	O7		**Reserved**

Downloaded by IFXDMZlpar-zengzhe 12/02/2019 11:04:31

Table 2-20 Port 33 Functions (cont'd)

Ball	Symbol	Ctrl.	Buffer Type	Function
AE15	P33.1	I	SLOW / PU1 / VEVRSB / ES5	**General-purpose input**
	GTM_TIM3_IN1_15			**Mux input channel 1 of TIM module 3**
	GTM_TIM1_IN5_6			**Mux input channel 5 of TIM module 1**
	GTM_TIM0_IN5_6			**Mux input channel 5 of TIM module 0**
	EDSADC_ITR1E			**Trigger/Gate input**
	PSI5_RX0C			**RXD inputs (receive data) channel 0**
	EDSADC_DSCIN2B			**Modulator clock input**
	SENT_SENT9C			**Receive input channel 9**
	ASCLIN8_ARXC			**Receive input**
	IOM_PIN_1			**GPIO pad input to FPC**
	EVADC_G10CH6	AI		**Analog input channel 6, group 10**
	EVADC_FC6CH0			**Analog input FC channel 6**
	P33.1	O0		**General-purpose output**
	GTM_TOUT23	O1		**GTM muxed output**
	IOM_MON0_1			**Monitor input 0**
	IOM_GTM_1			**GTM-provided inputs to EXOR combiner**
	ASCLIN3_ASLSO	O2		**Slave select signal output**
	QSPI2_SCLK	O3		**Master SPI clock output**
	EDSADC_DSCOUT2	O4		**Modulator clock output**
	EVADC_EMUX02	O5		**Control of external analog multiplexer interface 0**
	EVADC_FC4BFLOUT	O6		**Boundary flag output, FC channel 4**
	—	O7		**Reserved**

Downloaded by IFXDMZ|par-zengzhe 12/02/2019 11:04:31

Table 2-20 Port 33 Functions (cont'd)

Ball	Symbol	Ctrl.	Buffer Type	Function
AD16	P33.2	I	SLOW / PU1 / VEVRSB / ES5	**General-purpose input**
	GTM_TIM3_IN2_14			**Mux input channel 2 of TIM module 3**
	GTM_TIM1_IN6_6			**Mux input channel 6 of TIM module 1**
	GTM_TIM0_IN6_6			**Mux input channel 6 of TIM module 0**
	EDSADC_ITR2E			**Trigger/Gate input**
	SENT_SENT8C			**Receive input channel 8**
	EDSADC_DSDIN2B			**Digital datastream input**
	IOM_PIN_2			**GPIO pad input to FPC**
	EVADC_G10CH5	AI		**Analog input channel 5, group 10**
	EVADC_FC5CH0			**Analog input FC channel 5**
	P33.2	O0		**General-purpose output**
	GTM_TOUT24	O1		**GTM muxed output**
	IOM_MON0_2			**Monitor input 0**
	IOM_GTM_2			**GTM-provided inputs to EXOR combiner**
	ASCLIN3_ASCLK	O2		**Shift clock output**
	QSPI2_SLSO10	O3		**Master slave select output**
	PSI5_TX0	O4		**TXD outputs (send data)**
	IOM_MON1_14			**Monitor input 1**
	IOM_REF1_14			**Reference input 1**
	EVADC_EMUX01	O5		**Control of external analog multiplexer interface 0**
	EVADC_FC3BFLOUT	O6		**Boundary flag output, FC channel 3**
	—	O7		**Reserved**

Downloaded by IFXDMZlpar-zengzhe 12/02/2019 11:04:31

Table 2-20 Port 33 Functions (cont'd)

Ball	Symbol	Ctrl.	Buffer Type	Function
AE16	P33.3	I	SLOW / PU1 / VEVRSB / ES5	**General-purpose input**
	GTM_TIM3_IN3_12			**Mux input channel 3 of TIM module 3**
	GTM_TIM1_IN7_6			**Mux input channel 7 of TIM module 1**
	GTM_TIM0_IN7_6			**Mux input channel 0 of TIM module 0**
	PSI5_RX1C			**RXD inputs (receive data) channel 1**
	SENT_SENT7C			**Receive input channel 7**
	EDSADC_DSCIN1B			**Modulator clock input**
	IOM_PIN_3			**GPIO pad input to FPC**
	EVADC_G10CH4	AI		**Analog input channel 4, group 10**
	EVADC_FC4CH0			**Analog input FC channel 4**
	P33.3	O0		**General-purpose output**
	GTM_TOUT25	O1		**GTM muxed output**
	IOM_MON0_3			**Monitor input 0**
	IOM_GTM_3			**GTM-provided inputs to EXOR combiner**
	ASCLIN5_ASCLK	O2		**Shift clock output**
	QSPI4_SLSO2	O3		**Master slave select output**
	EDSADC_DSCOUT1	O4		**Modulator clock output**
	EVADC_EMUX00	O5		**Control of external analog multiplexer interface 0**
	EVADC_FC5BFLOUT	O6		**Boundary flag output, FC channel 5**
	—	O7		**Reserved**

Downloaded by IFXDMZlpar-zengzhe 12/02/2019 11:04:31

Table 2-20 Port 33 Functions (cont'd)

Ball	Symbol	Ctrl.	Buffer Type	Function
AD17	P33.4	I	SLOW / PU1 / VEVRSB / ES5	**General-purpose input**
	GTM_TIM4_IN4_10			**Mux input channel 4 of TIM module 4**
	GTM_TIM1_IN0_10			**Mux input channel 0 of TIM module 1**
	GTM_TIM0_IN0_10			**Mux input channel 0 of TIM module 0**
	EDSADC_ITR0F			**Trigger/Gate input**
	SENT_SENT6C			**Receive input channel 6**
	EDSADC_DSDIN1B			**Digital datastream input**
	CCU61_CTRAPC			**Trap input capture**
	ASCLIN5_ARXB			**Receive input**
	IOM_PIN_4			**GPIO pad input to FPC**
	GTM_DTMT2_0			**CDTM2_DTM0**
	EVADC_G10CH3	AI		**Analog input channel 3, group 10**
	P33.4	O0		**General-purpose output**
	GTM_TOUT26	O1		**GTM muxed output**
	IOM_MON0_4			**Monitor input 0**
	IOM_GTM_4			**GTM-provided inputs to EXOR combiner**
	ASCLIN2_ARTS	O2		**Ready to send output**
	QSPI2_SLSO12	O3		**Master slave select output**
	PSI5_TX1	O4		**TXD outputs (send data)**
	IOM_MON1_15			**Monitor input 1**
	EVADC_EMUX12	O5		**Control of external analog multiplexer interface 1**
	EVADC_FC0BFLOUT	O6		**Boundary flag output, FC channel 0**
	CAN13_TXD	O7		**CAN transmit output node 3**

Downloaded by IFXDMZlpar-zengzhe 12/02/2019 11:04:31

Table 2-20 Port 33 Functions (cont'd)

Ball	Symbol	Ctrl.	Buffer Type	Function
AE17	P33.5	I	SLOW / PU1 / VEVRSB / ES5	**General-purpose input**
	GTM_TIM4_IN5_10			**Mux input channel 5 of TIM module 4**
	GTM_TIM1_IN1_8			**Mux input channel 1 of TIM module 1**
	GTM_TIM0_IN1_8			**Mux input channel 1 of TIM module 0**
	EDSADC_DSCIN0B			**Modulator clock input**
	EDSADC_ITR1F			**Trigger/Gate input**
	GPT120_T4EUDB			**Count direction control input of timer T4**
	PSI5S_RXC			**RX data input**
	ASCLIN2_ACTSB			**Clear to send input**
	CCU61_CCPOS2C			**Hall capture input 2**
	PSI5_RX2C			**RXD inputs (receive data) channel 2**
	SENT_SENT5C			**Receive input channel 5**
	CAN13_RXDB			**CAN receive input node 3**
	IOM_PIN_5			**GPIO pad input to FPC**
	EVADC_G10CH2	AI		**Analog input channel 2, group 10**
	P33.5	O0		**General-purpose output**
	GTM_TOUT27	O1		**GTM muxed output**
	IOM_MON0_5			**Monitor input 0**
	IOM_GTM_5			**GTM-provided inputs to EXOR combiner**
	QSPI0_SLSO7	O2		**Master slave select output**
	QSPI1_SLSO7	O3		**Master slave select output**
	EDSADC_DSCOUT0	O4		**Modulator clock output**
	EVADC_EMUX11	O5		**Control of external analog multiplexer interface 1**
	EVADC_FC2BFLOUT	O6		**Boundary flag output, FC channel 2**
	ASCLIN5_ASLSO	O7		**Slave select signal output**

Downloaded by IFXDMZlpar-zengzhe 12/02/2019 11:04:31

Table 2-20 Port 33 Functions (cont'd)

Ball	Symbol	Ctrl.	Buffer Type	Function
AD18	P33.6	I	SLOW / PU1 / VEVRSB / ES5	**General-purpose input**
	GTM_TIM1_IN2_9			**Mux input channel 2 of TIM module 1**
	GTM_TIM0_IN2_9			**Mux input channel 2 of TIM module 0**
	EDSADC_ITR2F			**Trigger/Gate input**
	GPT120_T2EUDB			**Count direction control input of timer T2**
	SENT_SENT4C			**Receive input channel 4**
	CCU61_CCPOS1C			**Hall capture input 1**
	EDSADC_DSDIN0B			**Digital datastream input**
	ASCLIN8_ARXD			**Receive input**
	IOM_PIN_6			**GPIO pad input to FPC**
	GTM_DTMT2_1			**CDTM2_DTM0**
	EVADC_G10CH1	AI		**Analog input channel 1, group 10**
	P33.6	O0		**General-purpose output**
	GTM_TOUT28	O1		**GTM muxed output**
	IOM_MON0_6			**Monitor input 0**
	IOM_GTM_6			**GTM-provided inputs to EXOR combiner**
	ASCLIN2_ASLSO	O2		**Slave select signal output**
	QSPI2_SLSO11	O3		**Master slave select output**
	PSI5_TX2	O4		**TXD outputs (send data)**
	IOM_REF1_15			**Reference input 1**
	EVADC_EMUX10	O5		**Control of external analog multiplexer interface 1**
	EVADC_FC1BFLOUT	O6		**Boundary flag output, FC channel 1**
	PSI5S_TX	O7		**TX data output**

Downloaded by IFXDMZlpar-zengzhe 12/02/2019 11:04:31

Table 2-20 Port 33 Functions (cont'd)

Ball	Symbol	Ctrl.	Buffer Type	Function
AE18	P33.7	I	SLOW / PU1 / VEVRSB / ES5	**General-purpose input**
	GTM_TIM1_IN3_9			**Mux input channel 3 of TIM module 1**
	GTM_TIM0_IN3_9			**Mux input channel 3 of TIM module 0**
	CAN00_RXDE			**CAN receive input node 0**
	GPT120_T2INB			**Trigger/gate input of timer T2**
	CCU61_CCPOS0C			**Hall capture input 0**
	SCU_E_REQ4_0			**ERU Channel 4 inputs 0 to 5 (0 is the LSB and 5 is the MSB)**
	SENT_SENT14C			**Receive input channel 14**
	IOM_PIN_7			**GPIO pad input to FPC**
	EVADC_G10CH0	AI		**Analog input channel 0, group 10**
	P33.7	O0		**General-purpose output**
	GTM_TOUT29	O1		**GTM muxed output**
	IOM_MON0_7			**Monitor input 0**
	IOM_GTM_7			**GTM-provided inputs to EXOR combiner**
	ASCLIN2_ASCLK	O2		**Shift clock output**
	QSPI4_SLSO7	O3		**Master slave select output**
	ASCLIN8_ATX	O4		**Transmit output**
	—	O5		**Reserved**
	EVADC_FC3BFLOUT	O6		**Boundary flag output, FC channel 3**
	—	O7		**Reserved**

Downloaded by IFXDMZlpar-zengzhe 12/02/2019 11:04:31

Table 2-20 Port 33 Functions (cont'd)

Ball	Symbol	Ctrl.	Buffer Type	Function
AD19	P33.8	I	FAST / HighZ / VEVRSB	**General-purpose input**
	GTM_TIM1_IN4_7			**Mux input channel 4 of TIM module 1**
	GTM_TIM0_IN4_7			**Mux input channel 4 of TIM module 0**
	ASCLIN2_ARXE			**Receive input**
	SCU_EMGSTOP_PORT_A			**Emergency stop Port Pin A input request**
	IOM_PIN_8			**GPIO pad input to FPC**
	P33.8	O0		**General-purpose output**
	GTM_TOUT30	O1		**GTM muxed output**
	IOM_MON0_8			**Monitor input 0**
	ASCLIN2_ATX	O2		**Transmit output**
	IOM_MON2_14			**Monitor input 2**
	IOM_REF2_14			**Reference input 2**
	QSPI4_SLSO2	O3		**Master slave select output**
	—	O4		**Reserved**
	CAN00_TXD	O5		**CAN transmit output node 0**
	IOM_MON2_5			**Monitor input 2**
	IOM_REF2_5			**Reference input 2**
	—	O6		**Reserved**
	CCU61_COUT62	O7		**T12 PWM channel 62**
	IOM_MON1_13			**Monitor input 1**
	IOM_REF1_8			**Reference input 1**
	SMU_FSP0	O		**FSP[1..0] Output Signals - Generated by SMU_core**

Downloaded by IFXDMZ|par-zengzhe 12/02/2019 11:04:31

Table 2-20 Port 33 Functions (cont'd)

Ball	Symbol	Ctrl.	Buffer Type	Function
AE19	P33.9	I	SLOW / PU1 / VEVRSB / ES5	**General-purpose input**
	GTM_TIM1_IN1_9			**Mux input channel 1 of TIM module 1**
	GTM_TIM0_IN1_9			**Mux input channel 1 of TIM module 0**
	QSPI3_HSICINA			**Highspeed capture channel**
	IOM_PIN_9			**GPIO pad input to FPC**
	P33.9	O0		**General-purpose output**
	GTM_TOUT31	O1		**GTM muxed output**
	IOM_MON0_9			**Monitor input 0**
	ASCLIN2_ATX	O2		**Transmit output**
	IOM_MON2_14			**Monitor input 2**
	IOM_REF2_14			**Reference input 2**
	QSPI4_SLSO1	O3		**Master slave select output**
	ASCLIN2_ASCLK	O4		**Shift clock output**
	CAN01_TXD	O5		**CAN transmit output node 1**
	IOM_MON2_6			**Monitor input 2**
	IOM_REF2_6			**Reference input 2**
	ASCLIN0_ATX	O6		**Transmit output**
	IOM_MON2_12			**Monitor input 2**
	IOM_REF2_12			**Reference input 2**
	CCU61_CC62	O7		**T12 PWM channel 62**
	IOM_MON1_10			**Monitor input 1**
	IOM_REF1_11			**Reference input 1**

Downloaded by IFXDMZ|par-zengzhe 12/02/2019 11:04:31

Table 2-20 Port 33 Functions (cont'd)

Ball	Symbol	Ctrl.	Buffer Type	Function
AD20	P33.10	I	FAST / PU1 / VEVRSB / ES5	**General-purpose input**
	GTM_TIM4_IN4_14			**Mux input channel 4 of TIM module 4**
	GTM_TIM1_IN0_9			**Mux input channel 0 of TIM module 1**
	GTM_TIM0_IN0_9			**Mux input channel 0 of TIM module 0**
	QSPI4_SLSIA			**Slave select input**
	QSPI3_HSICINB			**Highspeed capture channel**
	CAN01_RXDD			**CAN receive input node 1**
	ASCLIN0_ARXD			**Receive input**
	IOM_PIN_10			**GPIO pad input to FPC**
	P33.10	O0		**General-purpose output**
	GTM_TOUT32	O1		**GTM muxed output**
	IOM_MON0_10			**Monitor input 0**
	QSPI1_SLSO6	O2		**Master slave select output**
	QSPI4_SLSO0	O3		**Master slave select output**
	ASCLIN1_ASLSO	O4		**Slave select signal output**
	PSI5S_CLK	O5		**PSISCLK is a clock that can be used on a pin to drive the external PHY.**
	—	O6		**Reserved**
	CCU61_COUT61	O7		**T12 PWM channel 61**
	IOM_MON1_12			**Monitor input 1**
	IOM_REF1_9			**Reference input 1**
	SMU_FSP1	O		**FSP[1..0] Output Signals - Generated by SMU_core**
AE20	P33.11	I	FAST / PU1 / VEVRSB / ES5	**General-purpose input**
	GTM_TIM1_IN2_8			**Mux input channel 2 of TIM module 1**
	GTM_TIM0_IN2_8			**Mux input channel 2 of TIM module 0**
	QSPI4_SCLKA			**Slave SPI clock inputs**
	IOM_PIN_11			**GPIO pad input to FPC**
	P33.11	O0		**General-purpose output**
	GTM_TOUT33	O1		**GTM muxed output**
	IOM_MON0_11			**Monitor input 0**
	ASCLIN1_ASCLK	O2		**Shift clock output**
	QSPI4_SCLK	O3		**Master SPI clock output**
	—	O4		**Reserved**
	—	O5		**Reserved**
	EDSADC_CGPWMN	O6		**Negative carrier generator output**
	CCU61_CC61	O7		**T12 PWM channel 61**
	IOM_MON1_9			**Monitor input 1**
	IOM_REF1_12			**Reference input 1**

Downloaded by IFXDMZ|par-zengzhe 12/02/2019 11:04:31

Table 2-20 Port 33 Functions (cont'd)

Ball	Symbol	Ctrl.	Buffer Type	Function
AD21	P33.12	I	FAST / PU1 / VEVRSB / ES5	**General-purpose input**
	GTM_TIM3_IN0_6			**Mux input channel 0 of TIM module 3**
	GTM_TIM2_IN0_6			**Mux input channel 0 of TIM module 2**
	QSPI4_MTSRA			**Save SPI data input**
	CAN00_RXDD			**CAN receive input node 0**
	PMS_PINBWKP			**PINB (P33.12) pin input**
	IOM_PIN_12			**GPIO pad input to FPC**
	P33.12	O0		**General-purpose output**
	GTM_TOUT34	O1		**GTM muxed output**
	IOM_MON0_12			**Monitor input 0**
	ASCLIN1_ATX	O2		**Transmit output**
	IOM_MON2_13			**Monitor input 2**
	IOM_REF2_13			**Reference input 2**
	QSPI4_MTSR	O3		**Master SPI data output**
	ASCLIN1_ASCLK	O4		**Shift clock output**
	CAN22_TXD	O5		**CAN transmit output node 2**
	EDSADC_CGPWMP	O6		**Positive carrier generator output**
	CCU61_COUT60	O7		**T12 PWM channel 60**
	IOM_MON1_11			**Monitor input 1**
	IOM_REF1_10			**Reference input 1**

Downloaded by IFXDMZlpar-zengzhe 12/02/2019 11:04:31

Table 2-20 Port 33 Functions (cont'd)

Ball	Symbol	Ctrl.	Buffer Type	Function
AE21	P33.13	I	FAST / PU1 / VEVRSB / ES5	**General-purpose input**
	GTM_TIM3_IN1_5			**Mux input channel 1 of TIM module 3**
	GTM_TIM2_IN1_5			**Mux input channel 1 of TIM module 2**
	ASCLIN1_ARXF			**Receive input**
	EDSADC_SGNB			**Carrier sign signal input**
	QSPI4_MRSTA			**Master SPI data input**
	MSC1_INJ1			**Injection signal from port**
	CAN22_RXDA			**CAN receive input node 2**
	P33.13	O0		**General-purpose output**
	GTM_TOUT35	O1		**GTM muxed output**
	ASCLIN1_ATX	O2		**Transmit output**
	IOM_MON2_13			**Monitor input 2**
	IOM_REF2_13			**Reference input 2**
	QSPI4_MRST	O3		**Slave SPI data output**
	IOM_MON2_4			**Monitor input 2**
	IOM_REF2_4			**Reference input 2**
	QSPI2_SLSO6	O4		**Master slave select output**
	CAN00_TXD	O5		**CAN transmit output node 0**
	IOM_MON2_5			**Monitor input 2**
	IOM_REF2_5			**Reference input 2**
	—	O6		**Reserved**
	CCU61_CC60	O7		**T12 PWM channel 60**
	IOM_MON1_8			**Monitor input 1**
	IOM_REF1_13			**Reference input 1**

Downloaded by IFXDMZlpar-zengzhe 12/02/2019 11:04:31

Table 2-20 Port 33 Functions (cont'd)

Ball	Symbol	Ctrl.	Buffer Type	Function
AA19	P33.14	I	FAST / PU1 / VEVRSB / ES5	**General-purpose input**
	GTM_TIM5_IN0_8			**Mux input channel 0 of TIM module 5**
	GTM_TIM4_IN5_14			**Mux input channel 5 of TIM module 4**
	GTM_TIM2_IN0_8			**Mux input channel 0 of TIM module 2**
	QSPI2_SCLKD			**Slave SPI clock inputs**
	CBS_TGI6			**Trigger input**
	P33.14	O0		**General-purpose output**
	GTM_TOUT143	O1		**GTM muxed output**
	—	O2		**Reserved**
	QSPI2_SCLK	O3		**Master SPI clock output**
	—	O4		**Reserved**
	—	O5		**Reserved**
	—	O6		**Reserved**
	CCU60_CC62	O7		**T12 PWM channel 62**
	IOM_MON1_0			**Monitor input 1**
	IOM_REF1_4			**Reference input 1**
	CBS_TGO6	O		**Trigger output**
AB19	P33.15	I	SLOW / PU1 / VEVRSB / ES5	**General-purpose input**
	GTM_TIM5_IN1_9			**Mux input channel 1 of TIM module 5**
	GTM_TIM4_IN6_12			**Mux input channel 6 of TIM module 4**
	GTM_TIM2_IN1_7			**Mux input channel 1 of TIM module 2**
	CBS_TGI7			**Trigger input**
	P33.15	O0		**General-purpose output**
	GTM_TOUT144	O1		**GTM muxed output**
	—	O2		**Reserved**
	QSPI2_SLSO11	O3		**Master slave select output**
	—	O4		**Reserved**
	—	O5		**Reserved**
	—	O6		**Reserved**
	CCU60_COUT62	O7		**T12 PWM channel 62**
	IOM_MON1_5			**Monitor input 1**
	IOM_REF1_1			**Reference input 1**
	CBS_TGO7	O		**Trigger output**

Downloaded by IFXDMZlpar-zengzhe 12/02/2019 11:04:31

Table 2-21 Port 34 Functions

Ball	Symbol	Ctrl.	Buffer Type	Function
AB16	P34.1	I	SLOW / PU1 / VEVRSB / ES5	**General-purpose input**
	GTM_TIM5_IN3_9			**Mux input channel 3 of TIM module 5**
	GTM_TIM3_IN4_12			**Mux input channel 4 of TIM module 3**
	GTM_TIM2_IN3_9			**Mux input channel 3 of TIM module 2**
	EVADC_G10CH11	AI		**Analog input channel 11, group 10**
	P34.1	O0		**General-purpose output**
	GTM_TOUT146	O1		**GTM muxed output**
	ASCLIN4_ATX	O2		**Transmit output**
	—	O3		**Reserved**
	CAN00_TXD	O4		**CAN transmit output node 0**
	IOM_MON2_5			**Monitor input 2**
	IOM_REF2_5			**Reference input 2**
	CAN20_TXD	O5		**CAN transmit output node 0**
	—	O6		**Reserved**
	CCU60_COUT63	O7		**T13 PWM channel 63**
	IOM_MON1_6			**Monitor input 1**
	IOM_REF1_0			**Reference input 1**
AA17	P34.2	I	SLOW / PU1 / VEVRSB / ES	**General-purpose input**
	GTM_TIM5_IN4_9			**Mux input channel 4 of TIM module 5**
	GTM_TIM3_IN5_13			**Mux input channel 5 of TIM module 3**
	GTM_TIM2_IN4_8			**Mux input channel 4 of TIM module 2**
	ASCLIN4_ARXB			**Receive input**
	CAN00_RXDG			**CAN receive input node 0**
	CAN20_RXDC			**CAN receive input node 0**
	EVADC_G10CH10	AI		**Analog input channel 10, group 10**
	P34.2	O0		**General-purpose output**
	GTM_TOUT147	O1		**GTM muxed output**
	—	O2		**Reserved**
	—	O3		**Reserved**
	—	O4		**Reserved**
	—	O5		**Reserved**
	—	O6		**Reserved**
	CCU60_CC60	O7		**T12 PWM channel 60**
	IOM_MON1_2			**Monitor input 1**
	IOM_REF1_6			**Reference input 1**

Downloaded by IFXDMZlpar-zengzhe 12/02/2019 11:04:31

Table 2-21 Port 34 Functions (cont'd)

Ball	Symbol	Ctrl.	Buffer Type	Function
AB17	P34.3	I	SLOW / PU1 / VEVRSB / ES	**General-purpose input**
	GTM_TIM5_IN5_10			**Mux input channel 5 of TIM module 5**
	GTM_TIM3_IN6_13			**Mux input channel 6 of TIM module 3**
	GTM_TIM2_IN5_9			**Mux input channel 5 of TIM module 2**
	EVADC_G10CH9	AI		**Analog input channel 9, group 10**
	P34.3	O0		**General-purpose output**
	GTM_TOUT148	O1		**GTM muxed output**
	ASCLIN4_ASCLK	O2		**Shift clock output**
	—	O3		**Reserved**
	QSPI2_SLSO10	O4		**Master slave select output**
	—	O5		**Reserved**
	—	O6		**Reserved**
	CCU60_COUT60	O7		**T12 PWM channel 60**
	IOM_MON1_3			**Monitor input 1**
	IOM_REF1_3			**Reference input 1**
AA18	P34.4	I	SLOW / PU1 / VEVRSB / ES	**General-purpose input**
	GTM_TIM5_IN6_10			**Mux input channel 6 of TIM module 5**
	GTM_TIM3_IN7_12			**Mux input channel 7 of TIM module 3**
	GTM_TIM2_IN6_8			**Mux input channel 6 of TIM module 2**
	QSPI2_MRSTD			**Master SPI data input**
	EVADC_G10CH8	AI		**Analog input channel 8, group 10**
	P34.4	O0		**General-purpose output**
	GTM_TOUT149	O1		**GTM muxed output**
	ASCLIN4_ASLSO	O2		**Slave select signal output**
	—	O3		**Reserved**
	QSPI2_MRST	O4		**Slave SPI data output**
	IOM_MON2_2			**Monitor input 2**
	IOM_REF2_2			**Reference input 2**
	—	O5		**Reserved**
	EVADC_FC6BFLOUT	O6		**Boundary flag output, FC channel 6**
	CCU60_CC61	O7		**T12 PWM channel 61**
	IOM_MON1_1			**Monitor input 1**
	IOM_REF1_5			**Reference input 1**

Downloaded by IFXDMZ|par-zengzhe 12/02/2019 11:04:31

Table 2-21 Port 34 Functions (cont'd)

Ball	Symbol	Ctrl.	Buffer Type	Function
AB18	P34.5	I	FAST / PU1 / VEVRSB / ES	**General-purpose input**
	GTM_TIM5_IN7_9			**Mux input channel 7 of TIM module 5**
	GTM_TIM4_IN7_12			**Mux input channel 7 of TIM module 4**
	GTM_TIM2_IN7_9			**Mux input channel 7 of TIM module 2**
	QSPI2_MTSRD			**Save SPI data input**
	ASCLIN8_ARXE			**Receive input**
	P34.5	O0		**General-purpose output**
	GTM_TOUT150	O1		**GTM muxed output**
	ASCLIN8_ATX	O2		**Transmit output**
	—	O3		**Reserved**
	QSPI2_MTSR	O4		**Master SPI data output**
	—	O5		**Reserved**
	EVADC_FC7BFLOUT	O6		**Boundary flag output, FC channel 7**
	CCU60_COUT61	O7		**T12 PWM channel 61**
	IOM_MON1_4			**Monitor input 1**
	IOM_REF1_2			**Reference input 1**

Table 2-22 Analog Inputs

Ball	Symbol	Ctrl.	Buffer Type	Function
AA15	AN0	I	D / HighZ / VDDM	**Analog Input 0**
	EVADC_G0CH0			**Analog input channel 0, group 0**
	EDSADC_EDS3PA			**Positive analog input channel 3, pin A**
AB15	AN1	I	D / HighZ / VDDM	**Analog Input 1**
	EVADC_G0CH1			**Analog input channel 1, group 0**
	EDSADC_EDS3NA			**Negative analog input channel 3, pin A**
AD14	AN2	I	D / HighZ / VDDM	**Analog Input 2**
	EVADC_G0CH2			**Analog input channel 2, group 0**
	EDSADC_EDS0PA			**Positive analog input channel 0, pin A**
AB14	AN3	I	D / HighZ / VDDM	**Analog Input 3**
	EVADC_G0CH3			**Analog input channel 3, group 0**
	EDSADC_EDS0NA			**Negative analog input channel 0, pin A**
AA14	AN4	I	D / HighZ / VDDM	**Analog Input 4**
	EVADC_G11CH0			**Analog input channel 0, group 11**
	EVADC_G0CH4			**Analog input channel 4, group 0**
AE14	AN5	I	D / HighZ / VDDM	**Analog Input 5**
	EVADC_G11CH1			**Analog input channel 1, group 11**
	EVADC_G0CH5			**Analog input channel 5, group 0**

Downloaded by IFXDMZ|par-zengzhe 12/02/2019 11:04:31

Table 2-22 Analog Inputs (cont'd)

Ball	Symbol	Ctrl.	Buffer Type	Function
AA13	AN6	I	D / HighZ / VDDM	**Analog Input 6**
	EVADC_G11CH2			**Analog input channel 2, group 11**
	EVADC_G0CH6			**Analog input channel 6, group 0**
AB13	AN7	I	D / HighZ / VDDM	**Analog Input 7**
	EVADC_G11CH3			**Analog input channel 3, group 11**
	EVADC_G0CH7			**Analog input channel 7, group 0**
AD13	AN8	I	D / HighZ / VDDM	**Analog Input 8**
	EVADC_G11CH4			**Analog input channel 4, group 11**
	EVADC_G1CH0			**Analog input channel 0, group 1**
AB12	AN9	I	D / HighZ / VDDM	**Analog Input 9**
	EVADC_G11CH5			**Analog input channel 5, group 11**
	EVADC_G1CH1			**Analog input channel 1, group 1**
AE13	AN10	I	D / HighZ / VDDM	**Analog Input 10**
	EVADC_G11CH6			**Analog input channel 6, group 11**
	EVADC_G1CH2			**Analog input channel 2, group 1**
AD12	AN11	I	D / HighZ / VDDM	**Analog Input 11**
	EVADC_G11CH7			**Analog input channel 7, group 11**
	EVADC_G1CH3			**Analog input channel 3, group 1**
AA12	AN12	I	D / HighZ / VDDM	**Analog Input 12**
	EVADC_G1CH4			**Analog input channel 4, group 1**
	EDSADC_EDS0PB			**Positive analog input channel 0, pin B**
AD11	AN13	I	D / HighZ / VDDM	**Analog Input 13**
	EVADC_G1CH5			**Analog input channel 5, group 1**
	EDSADC_EDS0NB			**Negative analog input channel 0, pin B**
AB11	AN14	I	D / HighZ / VDDM	**Analog Input 14**
	EVADC_G1CH6			**Analog input channel 6, group 1**
	EDSADC_EDS3PB			**Positive analog input channel 3, pin B**
AA11	AN15	I	D / HighZ / VDDM	**Analog Input 15**
	EVADC_G1CH7			**Analog input channel 7, group 1**
	EDSADC_EDS3NB			**Negative analog input channel 3, pin N**
AD10	AN16	I	D / HighZ / VDDM	**Analog Input 16**
	EVADC_G2CH0			**Analog input channel 0, group 2**
	EVADC_FC0CH0			**Analog input FC channel 0**
AB10	AN17/P40.10	I	S / HighZ / VDDM	**Analog Input 17**
	SENT_SENT10A			**Receive input channel 10**
	EVADC_G2CH1			**Analog input channel 1, group 2**
	EVADC_FC1CH0			**Analog input FC channel 1**

Downloaded by IFXDMZ|par-zengzhe 12/02/2019 11:04:31

Table 2-22 Analog Inputs (cont'd)

Ball	Symbol	Ctrl.	Buffer Type	Function
AD9	AN18/P40.11	I	S / HighZ / VDDM	**Analog Input 18**
	SENT_SENT11A			**Receive input channel 11**
	EVADC_G11CH8			**Analog input channel 8, group 11**
	EVADC_G2CH2			**Analog input channel 2, group 2**
AD8	AN19/P40.12	I	S / HighZ / VDDM	**Analog Input 19**
	SENT_SENT12A			**Receive input channel 12**
	EVADC_G11CH9			**Analog input channel 9, group 11**
	EVADC_G2CH3			**Analog input channel 3, group 2**
AE8	AN20	I	D / HighZ / VDDM	**Analog Input 20**
	EVADC_G2CH4			**Analog input channel 4, group 2**
	EDSADC_EDS2PA			**Positive analog input channel 2, pin A**
AE7	AN21	I	D / HighZ / VDDM	**Analog Input 21**
	EVADC_G2CH5			**Analog input channel 5, group 2**
	EDSADC_EDS2NA			**Negative analog input channel 2, pin A**
AA10	AN22	I	D / HighZ / VDDM	**Analog Input 22**
	EVADC_G2CH6			**Analog input channel 6, group 2**
Y10	AN23	I	D / HighZ / VDDM	**Analog Input 23**
	EVADC_G2CH7			**Analog input channel 7, group 2**
AD7	AN24/P40.0	I	S / HighZ / VDDM	**Analog Input 24**
	SENT_SENT0A			**Receive input channel 0**
	EVADC_G3CH0			**Analog input channel 0, group 3**
	CCU60_CCPOS0D			**Hall capture input 0**
	EDSADC_EDS2PB			**Positive analog input channel 2, pin B**
AD6	AN25/P40.1	I	S / HighZ / VDDM	**Analog Input 25**
	SENT_SENT1A			**Receive input channel 1**
	EVADC_G3CH1			**Analog input channel 1, group 3**
	CCU60_CCPOS1B			**Hall capture input 1**
	EDSADC_EDS2NB			**Negative analog input channel 2, pin B**
AC7	AN26/P40.2	I	S / HighZ / VDDM	**Analog Input 26**
	SENT_SENT2A			**Receive input channel 2**
	EVADC_G3CH2			**Analog input channel 2, group 3**
	CCU60_CCPOS1D			**Hall capture input 1**
	EVADC_G11CH10			**Analog input channel 10, group 11**
AC6	AN27/P40.3	I	S / HighZ / VDDM	**Analog Input 27**
	SENT_SENT3A			**Receive input channel 3**
	EVADC_G3CH3			**Analog input channel 3, group 3**
	CCU60_CCPOS2B			**Hall capture input 2**
	EVADC_G11CH11			**Analog input channel 11, group 11**

Downloaded by IFXDMZ|par-zengzhe 12/02/2019 11:04:31

Table 2-22 Analog Inputs (cont'd)

Ball	Symbol	Ctrl.	Buffer Type	Function
AB7	AN28/P40.13	I	S / HighZ / VDDM	**Analog Input 28**
	SENT_SENT13A			**Receive input channel 13**
	EVADC_G3CH4			**Analog input channel 4, group 3**
	EVADC_G4CH4			**Analog input channel 4, group 4**
AB6	AN29/P40.14	I	S / HighZ / VDDM	**Analog Input 29**
	SENT_SENT14A			**Receive input channel 14**
	EVADC_G3CH5			**Analog input channel 5, group 3**
	EVADC_G4CH5			**Analog input channel 5, group 4**
AA9	AN30	I	D / HighZ / VDDM	**Analog Input 30**
	EVADC_G3CH6			**Analog input channel 6, group 3**
	EVADC_G4CH6			**Analog input channel 6, group 4**
Y9	AN31	I	D / HighZ / VDDM	**Analog Input 31**
	EVADC_G3CH7			**Analog input channel 7, group 3**
	EVADC_G4CH7			**Analog input channel 7, group 4**
W9	AN32/P40.4	I	S / HighZ / VDDM	**Analog Input 32**
	SENT_SENT4A			**Receive input channel 4**
	EVADC_G8CH0			**Analog input channel 0, group 8**
	CCU60_CCPOS2D			**Hall capture input 2**
	EVADC_G11CH12			**Analog input channel 12, group 11**
Y6	AN33/P40.5	I	S / HighZ / VDDM	**Analog Input 33**
	SENT_SENT5A			**Receive input channel 5**
	EVADC_G8CH1			**Analog input channel 1, group 8**
	CCU61_CCPOS0D			**Hall capture input 0**
	EVADC_G11CH13			**Analog input channel 13, group 11**
W10	AN34	I	D / HighZ / VDDM	**Analog Input 34**
	EVADC_G8CH2			**Analog input channel 2, group 8**
	EVADC_G11CH14			**Analog input channel 14, group 11**
Y7	AN35	I	D / HighZ / VDDM	**Analog Input 35**
	EVADC_G8CH3			**Analog input channel 3, group 8**
	EVADC_G11CH15			**Analog input channel 15, group 11**
V9	AN36/P40.6	I	S / HighZ / VDDM	**Analog Input 36**
	SENT_SENT6A			**Receive input channel 6**
	EVADC_G8CH4			**Analog input channel 4, group 8**
	CCU61_CCPOS1B			**Hall capture input 1**
	EDSADC_EDS1PA			**Positive analog input channel 1, pin A**

Downloaded by IFXDMZ|par-zengzhe 12/02/2019 11:04:31

Table 2-22 Analog Inputs (cont'd)

Ball	Symbol	Ctrl.	Buffer Type	Function
W7	AN37/P40.7	I	S / HighZ / VDDM	**Analog Input 37**
	SENT_SENT7A			**Receive input channel 7**
	EVADC_G8CH5			**Analog input channel 5, group 8**
	CCU61_CCPOS1D			**Hall capture input 1**
	EDSADC_EDS1NA			**Negative analog input channel 1, pin A**
V10	AN38/P40.8	I	S / HighZ / VDDM	**Analog Input 38**
	SENT_SENT8A			**Receive input channel 8**
	EVADC_G8CH6			**Analog input channel 6, group 8**
	CCU61_CCPOS2B			**Hall capture input 2**
	EDSADC_EDS1PB			**Positive analog input channel 1, pin B**
W6	AN39/P40.9	I	S / HighZ / VDDM	**Analog Input 39**
	SENT_SENT9A			**Receive input channel 9**
	EVADC_G8CH7			**Analog input channel 7, group 8**
	CCU61_CCPOS2D			**Hall capture input 2**
	EDSADC_EDS1NB			**Negative analog input channel 1, pin B**
U10	AN40	I	D / HighZ / VDDM	**Analog Input 40**
	EVADC_G8CH8			**Analog input channel 8, group 8**
	EVADC_G4CH0			**Analog input channel 0, group 4**
U9	AN41	I	D / HighZ / VDDM	**Analog Input 41**
	EVADC_G8CH9			**Analog input channel 9, group 8**
	EVADC_G4CH1			**Analog input channel 1, group 4**
T10	AN42	I	D / HighZ / VDDM	**Analog Input 42**
	EVADC_G8CH10			**Analog input channel 10, group 8**
	EVADC_G4CH2			**Analog input channel 2, group 4**
T9	AN43	I	D / HighZ / VDDM	**Analog Input 43**
	EVADC_G8CH11			**Analog input channel 11, group 8**
	EVADC_G4CH3			**Analog input channel 3, group 4**
V6	AN44	I	D / HighZ / VDDM	**Analog Input 44**
	EVADC_G8CH12			**Analog input channel 12, group 8**
	EDSADC_EDS1PC			**Positive analog input channel 1, pin C**
V7	AN45	I	D / HighZ / VDDM	**Analog Input 45**
	EVADC_G8CH13			**Analog input channel 13, group 8**
	EDSADC_EDS1NC			**Negative analog input channel 1, pin C**
U6	AN46	I	D / HighZ / VDDM	**Analog Input 46**
	EVADC_G8CH14			**Analog input channel 14, group 8**
	EDSADC_EDS1PD			**Positive analog input channel 1, pin D**

Downloaded by IFXDMZ|par-zengzhe 12/02/2019 11:04:31

Table 2-22 Analog Inputs (cont'd)

Ball	Symbol	Ctrl.	Buffer Type	Function
U7	AN47	I	D / HighZ / VDDM	**Analog Input 47**
	EVADC_G8CH15			**Analog input channel 15, group 8**
	EDSADC_EDS1ND			**Negative analog input channel 1, pin D**
AK7	AN48	I	D / HighZ / VDDM	**Analog Input 48**
	EVADC_G5CH0			**Analog input channel 0, group 5**
AJ7	AN49	I	D / HighZ / VDDM	**Analog Input 49**
	EVADC_G5CH1			**Analog input channel 1, group 5**
AJ6	AN50	I	D / HighZ / VDDM	**Analog Input 50**
	EVADC_G5CH2			**Analog input channel 2, group 5**
	EDSADC_EDS9PA			**Positive analog input channel 9, pin A**
AK6	AN51	I	D / HighZ / VDDM	**Analog Input 51**
	EVADC_G5CH3			**Analog input channel 3, group 5**
	EDSADC_EDS9NA			**Negative analog input channel 9, pin A**
AJ5	AN52	I	D / HighZ / VDDM	**Analog Input 52**
	EVADC_G5CH4			**Analog input channel 4, group 5**
	EDSADC_EDS6PA			**Positive analog input channel 6, pin A**
AK5	AN53	I	D / HighZ / VDDM	**Analog Input 53**
	EVADC_G5CH5			**Analog input channel 5, group 5**
	EDSADC_EDS6NA			**Negative analog input channel 6, pin A**
AJ4	AN54/P41.4	I	S / HighZ / VDDM	**Analog Input 54**
	SENT_SENT20A			**Receive input channel 20**
	EVADC_G5CH6			**Analog input channel 6, group 5**
	EDSADC_EDS6PB			**Positive analog input channel 6, pin B**
AK4	AN55/P41.5	I	S / HighZ / VDDM	**Analog Input 55**
	SENT_SENT21A			**Receive input channel 21**
	EVADC_G5CH7			**Analog input channel 7, group 5**
	EDSADC_EDS6NB			**Negative analog input channel 6, pin B**
AF1	AN56	I	D / HighZ / VDDM	**Analog Input 56**
	EVADC_G6CH0			**Analog input channel 0, group 6**
AF2	AN57	I	D / HighZ / VDDM	**Analog Input 57**
	EVADC_G6CH1			**Analog input channel 1, group 6**
AE2	AN58	I	D / HighZ / VDDM	**Analog Input 58**
	EVADC_G6CH2			**Analog input channel 2, group 6**
	EDSADC_EDS10PA			**Positive analog input channel 10, pin A**
AE1	AN59	I	D / HighZ / VDDM	**Analog Input 59**
	EVADC_G6CH3			**Analog input channel 3, group 6**
	EDSADC_EDS10NA			**Negative analog input channel 10, pin A**

Downloaded by IFXDMZ|par-zengzhe 12/02/2019 11:04:31

Table 2-22 Analog Inputs (cont'd)

Ball	Symbol	Ctrl.	Buffer Type	Function
AD1	AN60	I	D / HighZ / VDDM	**Analog Input 60**
	EVADC_G6CH4			**Analog input channel 4, group 6**
	EDSADC_EDS7PA			**Positive analog input channel 7, pin A**
AD2	AN61	I	D / HighZ / VDDM	**Analog Input 61**
	EVADC_G6CH5			**Analog input channel 5, group 6**
	EDSADC_EDS7NA			**Negative analog input channel 7, pin A**
AC2	AN62/P41.6	I	S / HighZ / VDDM	**Analog Input 62**
	SENT_SENT22A			**Receive input channel 22**
	EVADC_G6CH6			**Analog input channel 6, group 6**
	EDSADC_EDS7PB			**Positive analog input channel 7, pin B**
AC1	AN63/P41.7	I	S / HighZ / VDDM	**Analog Input 63**
	SENT_SENT23A			**Receive input channel 23**
	EVADC_G6CH7			**Analog input channel 7, group 6**
	EDSADC_EDS7NB			**Negative analog input channel 7, pin B**
AB2	AN64/P41.8	I	S / HighZ / VDDM	**Analog Input 64**
	SENT_SENT24A			**Receive input channel 24**
	EVADC_G7CH0			**Analog input channel 0, group 7**
AB1	AN65	I	D / HighZ / VDDM	**Analog Input 65**
	EVADC_G7CH1			**Analog input channel 1, group 7**
AA2	AN66	I	D / HighZ / VDDM	**Analog Input 66**
	EVADC_G7CH2			**Analog input channel 2, group 7**
	EDSADC_EDS11PA			**Positive analog input channel 11, pin A**
AA1	AN67/P40.15	I	S / HighZ / VDDM	**Analog Input 67**
	SENT_SENT15A			**Receive input channel 15**
	EVADC_G7CH3			**Analog input channel 3, group 7**
	EDSADC_EDS11NA			**Negative analog input channel 11, pin A**
Y1	AN68/P41.0	I	S / HighZ / VDDM	**Analog Input 68**
	SENT_SENT16A			**Receive input channel 16**
	EVADC_G7CH4			**Analog input channel 4, group 7**
	EDSADC_EDS8PA			**Positive analog input channel 8, pin A**
Y2	AN69/P41.1	I	S / HighZ / VDDM	**Analog Input 69**
	SENT_SENT17A			**Receive input channel 17**
	EVADC_G7CH5			**Analog input channel 5, group 7**
	EDSADC_EDS8NA			**Negative analog input channel 8, pin A**

Downloaded by IFXDMZ|par-zengzhe 12/02/2019 11:04:31

Table 2-22 Analog Inputs (cont'd)

Ball	Symbol	Ctrl.	Buffer Type	Function
W1	AN70/P41.2	I	S / HighZ / VDDM	**Analog Input 70**
	SENT_SENT18A			**Receive input channel 18**
	EVADC_G7CH6			**Analog input channel 6, group 7**
	EDSADC_EDS12PA			**Positive analog input channel 9, pin B**
	EDSADC_EDS9PB			**Positive analog input channel 9, pin B**
W2	AN71/P41.3	I	S / HighZ / VDDM	**Analog Input 71**
	SENT_SENT19A			**Receive input channel 19**
	EVADC_G7CH7			**Analog input channel 7, group 7**
	EDSADC_EDS12NA			**Negative analog input channel 9, pin B**
	EDSADC_EDS9NB			**Negative analog input channel 9, pin B**
V1	AN72	I	D / HighZ / VDDM	**Analog Input 72**
	EDSADC_EDS13PA			**Positive analog input channel 13, pin A**
V2	AN73	I	D / HighZ / VDDM	**Analog Input 73**
	EDSADC_EDS13NA			**Negative analog input channel 13, pin A**

Table 2-23 System I/O

Ball	Symbol	Ctrl.	Buffer Type	Function
T12	AGBTCLKN (VSS)	I	LVDS_RX / VEXT	**AGBT Input;(TC3xx devices without AGBT: VSS)**
R12	AGBTCLKP (VSS)	I	LVDS_RX / VEXT	**AGBT Input;(TC3xx devices without AGBT: VSS)**
W15	AGBTTXN (VSS)	O	LVDS_TX / VEXT	**AGBT Output;(TC3xx devices without AGBT: VSS)**
W16	AGBTTXP (VSS)	O	LVDS_TX / VEXT	**AGBT Output;(TC3xx devices without AGBT: VSS)**
T19	AGBTERR (VSS)	I	FAST / PD / VEXT	**AGBT Input;(TC3xx devices without AGBT: VSS)**
AD22	P32.1/VGATE1P	O	—	**DCDC P ch. MOSFET gate driver output** P32.1 / External Pass Device gate control for EVRC
AE22	P32.0/VGATE1N	O	—	**DCDC N ch. MOSFET gate driver output** P32.0 / SMPS mode: analog output. External Pass Device gate control for EVRC
U25	XTAL1	I	XTAL / VEXTOSC	**XTAL1. Main Oscillator/PLL/Clock Generator Input.**
U24	XTAL2	O	XTAL / VEXTOSC	**XTAL2. Main Oscillator/PLL/Clock Generator OUTPUT**

Downloaded by IFXDMZlpar-zengzhe 12/02/2019 11:04:31

Table 2-23 System I/O (cont'd)

Ball	Symbol	Ctrl.	Buffer Type	Function
R19	DAPE0	I	FAST / PD2 / VEXT	**DAPE: DAPE0 Clock Input** DAPE: DAPE0 clock input(PD Devices: NC)
T24	$\overline{\text{TRST}}$	I	FAST / PU2 / VEXT	**JTAG Module Reset/Enable Input**
	DAPE0	I		**DAPE: DAPE0 Clock Input**
R21	TMS	I	FAST / PD2 / VEXT	**JTAG Module State Machine Control Input**
	DAP1	I/O		**DAP: DAP1 Data I/O**
P21	TCK	I	FAST / PD2 / VEXT	**JTAG Module Clock Input**
	DAP0	I		**DAP: DAP0 Clock Input**
M16	DAPE1	I/O	FAST / PD2 / VEXT	**DAPE: DAPE1 Data I/O** DAPE: DAPE1 Data I/O(PD Devices: VSS)
M15	DAPE2	I/O	FAST / PD2 / VEXT	**DAPE: DAPE2 Data I/O** DAPE: DAPE2 Data I/O(PD Devices: VSS)
M21	$\overline{\text{ESR1}}$	I	FAST / PU1 / VEXT	**ESR1 Port Pin input - can be used to trigger a reset or an NMI** ESR1: External System Request Reset 1. Default NMI function. See also SCU chapter for details. Default after power-on can be different. See also SCU chapter ´Reset Control Unit´ and SCU_IOCR register description. PMS_EVRWUP: EVR Wakepup Pin
	PMS_ESR1WKP	I		**ESR1 pin input**
L21	$\overline{\text{ESR0}}$	I	FAST / OD / VEXT	**ESR0 Port Pin input - can be used to trigger a reset or an NMI** ESR0: External System Request Reset 0. Default configuration during and after reset is open-drain driver. The driver drives low during power-on reset. This is valid additionally after deactivation of PORST_N until the internal reset phase has finished. See also SCU chapter for details. Default after power-on can be different. See also SCU chapter ´Reset Control Unit´ and SCU_IOCR register description. PMS_EVRWUP: EVR Wakepup Pin
	PMS_ESR0WKP	I		**ESR0 pin input**
M22	$\overline{\text{PORST}}$	I	PORST / PD / VEXT	**PORST pin input** Power On Reset Input. Additional strong PD in case of power fail.

Downloaded by IFXDMZ|par-zengzhe 12/02/2019 11:04:31

Table 2-24 Supply

Ball	Symbol	Ctrl.	Buffer Type	Function
N19, V19, M18, W18, W13, V12, J21, K20	VDD	I	—	**Digital Core Power Supply (1.25V)**
AJ30, AH29, AD25, AC24, G8, F7, B3, A2	VEXT	I	—	**External Power Supply (5V / 3.3V)**
J10	VFLEX	I	—	**Digital Power Supply for Flex Port Pads (5V / 3.3V)**
AE10, AJ9, AK9	VDDM	I	—	**ADC Analog Power Supply (5V / 3.3V)**
A29, B28, F24, G23	VDDP3	I	—	**Flash Power Supply (3.3V)**
AK30, AJ29, AE25, AD24, AB22, AA21, K10, J9, G7, B2, A30, B30, B29, F25, G24, J22, K21	VSS	I	—	**Digital Ground**
AE9, AJ8, AK8	VSSM	I	—	**Analog Ground for VDDM**
P19, U19, P18, R18, T18, U18, M17, N17, R17, T17, V17, W17, N16, P16, R16, T16, U16, V16, N15, P15, R15, T15, U15, V15, M14, N14, R14, T14, V14, W14, P13, R13, T13, U13, P12, U12	VSS	I	—	**Digital Ground**
T25	VSSOSC	I	—	**Oscillator Ground**
AE11	VAREF1	I	—	**Positive Analog Reference Voltage 1**
AE12	VAGND1	I	—	**Negative Analog Reference Voltage 1**

Downloaded by IFXDMZ|par-zengzhe 12/02/2019 11:04:31

Table 2-24 Supply (cont'd)

Ball	Symbol	Ctrl.	Buffer Type	Function
AA6	VAREF2	I	—	**Positive Analog Reference Voltage 2**
AA7	VAGND2	I	—	**Negative Analog Reference Voltage 2**
C30, D30, E30, F30, G30, W30, C29, D29, E29, F29, G29, A28, A27, B27, A26, B26, A25, A21, AJ20, B21, B20, A17, B17, A10, B10, A9, B9, A8, A4, B4, A3, AJ3, AK3, C2, D2, E2, H2, R2, AH2, AJ2, AK2, B1, C1, D1, E1, H1, J1, R1, T1, AH1, AJ1, B6, B14, B25	NC	I	—	**Not connected. These pins are reserved for future extensions and shall not be connected externally**
AB9, F6, AE6, A1, AK1, V30, V29	NC1	I	—	**Not connected. These pins are not connected on package level and will not be used for future extensions**
H30, H29, AJ10, AK10	VSS	I	—	**Digital Ground for EBU**
N12, M13	VDDSB (VDD)	I	—	**Devices with integrated EMEM: EMEM SRAM Standby Power Supply, VDDSB (1.25V);Devices without integrated EMEM: VDD (1.25V)**
J29, J30, AH30, AK29, AK20, AJ11, AK11	VEBU	I	—	**Digital Power Supply for EBU (5V / 3.3V)**
AA16	VEVRSB	I	—	**Standby Power Supply (5V / 3.3V) for the Standby SRAM**
V24	VDDOSC	I	—	**Digital Power Supply for Oscillator (1.25V)**
V25	VEXTOSC	I	—	**Digital Power Supply for Oscillator (shall be supplied with same level as used for VEXT)**
AG1	VAREF3	I	—	**Positive Analog Reference Voltage 3**
AG2	VAGND3	I	—	**Negative Analog Reference Voltage 3**

Downloaded by IFXDMZ|par-zengzhe 12/02/2019 11:04:31

2.2 LFBGA-292 Package Variant Pin Configuration

Table 2-25 Port 00 Functions

Ball	Symbol	Ctrl.	Buffer Type	Function
G1	P00.0	I	FAST / PU1 / VEXT / ES	**General-purpose input**
	GTM_TIM5_IN4_10			**Mux input channel 4 of TIM module 5**
	GTM_TIM3_IN0_1			**Mux input channel 0 of TIM module 3**
	GTM_TIM2_IN0_1			**Mux input channel 0 of TIM module 2**
	CCU61_CTRAPA			**Trap input capture**
	CCU60_T12HRE			**External timer start 12**
	MSC0_INJ0			**Injection signal from port**
	GETH_MDIOA			**MDIO Input**
	P00.0	O0		**General-purpose output**
	GTM_TOUT9	O1		**GTM muxed output**
	IOM_REF0_9			**Reference input 0**
	ASCLIN3_ASCLK	O2		**Shift clock output**
	ASCLIN3_ATX	O3		**Transmit output**
	IOM_MON2_15			**Monitor input 2**
	IOM_REF2_15			**Reference input 2**
	—	O4		**Reserved**
	CAN10_TXD	O5		**CAN transmit output node 0**
	—	O6		**Reserved**
	CCU60_COUT63	O7		**T13 PWM channel 63**
	IOM_MON1_6			**Monitor input 1**
	IOM_REF1_0			**Reference input 1**
	GETH_MDIO	O		**MDIO Output**

Downloaded by IFXDMZ|par-zengzhe 12/02/2019 11:04:31

Table 2-25 Port 00 Functions (cont'd)

Ball	Symbol	Ctrl.	Buffer Type	Function
G2	P00.1	I	SLOW / PU1 / VEXT / ES	**General-purpose input**
	GTM_TIM5_IN5_11			**Mux input channel 5 of TIM module 5**
	GTM_TIM3_IN1_1			**Mux input channel 1 of TIM module 3**
	GTM_TIM2_IN1_1			**Mux input channel 1 of TIM module 2**
	CCU60_CC60INB			**T12 capture input 60**
	ASCLIN3_ARXE			**Receive input**
	EDSADC_DSCIN5A			**Modulator clock input**
	CAN10_RXDA			**CAN receive input node 0**
	PSI5_RX0A			**RXD inputs (receive data) channel 0**
	CCU61_CC60INA			**T12 capture input 60**
	SENT_SENT0B			**Receive input channel 0**
	EDSADC_DSCIN7B			**Modulator clock input**
	EVADC_G9CH11	AI		**Analog input channel 11, group 9**
	EDSADC_EDS5NA			**Negative analog input channel 5, pin A**
	P00.1	O0		**General-purpose output**
	GTM_TOUT10	O1		**GTM muxed output**
	IOM_REF0_10			**Reference input 0**
	ASCLIN3_ATX	O2		**Transmit output**
	IOM_MON2_15			**Monitor input 2**
	IOM_REF2_15			**Reference input 2**
	—	O3		**Reserved**
	EDSADC_DSCOUT5	O4		**Modulator clock output**
	EDSADC_DSCOUT7	O5		**Modulator clock output**
	SENT_SPC0	O6		**Transmit output**
	CCU61_CC60	O7		**T12 PWM channel 60**
	IOM_MON1_8			**Monitor input 1**
	IOM_REF1_13			**Reference input 1**

Downloaded by IFXDMZ|par-zengzhe 12/02/2019 11:04:31

Table 2-25 Port 00 Functions (cont'd)

Ball	Symbol	Ctrl.	Buffer Type	Function
H1	P00.2	I	SLOW / PU1 / VEXT / ES1	**General-purpose input**
	GTM_TIM5_IN6_11			**Mux input channel 6 of TIM module 5**
	GTM_TIM3_IN1_2			**Mux input channel 1 of TIM module 3**
	GTM_TIM2_IN1_2			**Mux input channel 1 of TIM module 2**
	EDSADC_DSDIN7B			**Digital datastream input**
	EDSADC_DSDIN5A			**Digital datastream input**
	SENT_SENT1B			**Receive input channel 1**
	EVADC_G9CH10	AI		**Analog input channel 10, group 9**
	EDSADC_EDS5PA			**Positive analog input channel 5, pin A**
	P00.2	O0		**General-purpose output**
	GTM_TOUT11	O1		**GTM muxed output**
	IOM_REF0_11			**Reference input 0**
	ASCLIN3_ASCLK	O2		**Shift clock output**
	CAN21_TXD	O3		**CAN transmit output node 1**
	PSI5_TX0	O4		**TXD outputs (send data)**
	IOM_MON1_14			**Monitor input 1**
	IOM_REF1_14			**Reference input 1**
	CAN03_TXD	O5		**CAN transmit output node 3**
	IOM_MON2_8			**Monitor input 2**
	IOM_REF2_8			**Reference input 2**
	QSPI3_SLSO4	O6		**Master slave select output**
	CCU61_COUT60	O7		**T12 PWM channel 60**
	IOM_MON1_11			**Monitor input 1**
	IOM_REF1_10			**Reference input 1**

Downloaded by IFXDMZlpar-zengzhe 12/02/2019 11:04:31

Table 2-25 Port 00 Functions (cont'd)

Ball	Symbol	Ctrl.	Buffer Type	Function
H2	P00.3	I	SLOW / PU1 / VEXT / ES1	**General-purpose input**
	GTM_TIM5_IN7_10			**Mux input channel 7 of TIM module 5**
	GTM_TIM3_IN2_1			**Mux input channel 2 of TIM module 3**
	GTM_TIM2_IN2_1			**Mux input channel 2 of TIM module 2**
	CCU60_CC61INB			**T12 capture input 61**
	EDSADC_DSCIN3A			**Modulator clock input**
	EDSADC_ITR5F			**Trigger/Gate input**
	PSI5_RX1A			**RXD inputs (receive data) channel 1**
	CAN03_RXDA			**CAN receive input node 3**
	CAN21_RXDA			**CAN receive input node 1**
	PSI5S_RXA			**RX data input**
	SENT_SENT2B			**Receive input channel 2**
	CCU61_CC61INA			**T12 capture input 61**
	EVADC_G9CH9	AI		**Analog input channel 9, group 9**
	EDSADC_EDS5NB			**Negative analog input channel 5, pin B**
	P00.3	O0		**General-purpose output**
	GTM_TOUT12	O1		**GTM muxed output**
	IOM_REF0_12			**Reference input 0**
	ASCLIN3_ASLSO	O2		**Slave select signal output**
	—	O3		**Reserved**
	EDSADC_DSCOUT3	O4		**Modulator clock output**
	—	O5		**Reserved**
	SENT_SPC2	O6		**Transmit output**
	CCU61_CC61	O7		**T12 PWM channel 61**
	IOM_MON1_9			**Monitor input 1**
	IOM_REF1_12			**Reference input 1**

Downloaded by IFXDMZlpar-zengzhe 12/02/2019 11:04:31

Table 2-25 Port 00 Functions (cont'd)

Ball	Symbol	Ctrl.	Buffer Type	Function
J1	P00.4	I	SLOW / PU1 / VEXT / ES1	**General-purpose input**
	GTM_TIM6_IN4_1			**Mux input channel 4 of TIM module 6**
	GTM_TIM3_IN3_1			**Mux input channel 3 of TIM module 3**
	GTM_TIM2_IN3_1			**Mux input channel 3 of TIM module 2**
	SCU_E_REQ2_2			**ERU Channel 2 inputs 0 to 5 (0 is the LSB and 5 is the MSB)**
	SENT_SENT3B			**Receive input channel 3**
	EDSADC_DSDIN3A			**Digital datastream input**
	EDSADC_SGNA			**Carrier sign signal input**
	ASCLIN10_ARXA			**Receive input**
	GTM_DTMA5_0			**CDTM5_DTM4**
	GTM_DTMT3_0			**CDTM3_DTM0**
	EVADC_G9CH8	AI		**Analog input channel 8, group 9**
	EDSADC_EDS5PB			**Positive analog input channel 5, pin B**
	P00.4	O0		**General-purpose output**
	GTM_TOUT13	O1		**GTM muxed output**
	IOM_REF0_13			**Reference input 0**
	PSI5S_TX	O2		**TX data output**
	CAN11_TXD	O3		**CAN transmit output node 1**
	PSI5_TX1	O4		**TXD outputs (send data)**
	IOM_MON1_15			**Monitor input 1**
	EVADC_FC4BFLOUT	O5		**Boundary flag output, FC channel 4**
	SENT_SPC3	O6		**Transmit output**
	CCU61_COUT61	O7		**T12 PWM channel 61**
	IOM_MON1_12			**Monitor input 1**
	IOM_REF1_9			**Reference input 1**

Downloaded by IFXDMZ|par-zengzhe 12/02/2019 11:04:31

Table 2-25 Port 00 Functions (cont'd)

Ball	Symbol	Ctrl.	Buffer Type	Function
J2	P00.5	I	SLOW / PU1 / VEXT / ES1	**General-purpose input**
	GTM_TIM3_IN4_1			**Mux input channel 4 of TIM module 3**
	GTM_TIM3_IN0_11			**Mux input channel 0 of TIM module 3**
	GTM_TIM2_IN4_1			**Mux input channel 4 of TIM module 2**
	CCU60_CC62INB			**T12 capture input 62**
	EDSADC_DSCIN2A			**Modulator clock input**
	PSI5_RX2A			**RXD inputs (receive data) channel 2**
	CCU61_CC62INA			**T12 capture input 62**
	SENT_SENT4B			**Receive input channel 4**
	CAN11_RXDB			**CAN receive input node 1**
	GTM_DTMT1_1			**CDTM1_DTM0**
	GTM_DTMT4_2			**CDTM4_DTM0**
	EVADC_G9CH7	AI		**Analog input channel 7, group 9**
	P00.5	O0		**General-purpose output**
	GTM_TOUT14	O1		**GTM muxed output**
	IOM_REF0_14			**Reference input 0**
	EDSADC_CGPWMN	O2		**Negative carrier generator output**
	QSPI3_SLSO3	O3		**Master slave select output**
	EDSADC_DSCOUT2	O4		**Modulator clock output**
	EVADC_FC0BFLOUT	O5		**Boundary flag output, FC channel 0**
	SENT_SPC4	O6		**Transmit output**
	CCU61_CC62	O7		**T12 PWM channel 62**
	IOM_MON1_10			**Monitor input 1**
	IOM_REF1_11			**Reference input 1**

Downloaded by IFXDMZlpar-zengzhe 12/02/2019 11:04:31

Table 2-25 Port 00 Functions (cont'd)

Ball	Symbol	Ctrl.	Buffer Type	Function
J4	P00.6	I	SLOW / PU1 / VEXT / ES1	**General-purpose input**
	GTM_TIM3_IN5_1			**Mux input channel 5 of TIM module 3**
	GTM_TIM3_IN1_14			**Mux input channel 1 of TIM module 3**
	GTM_TIM2_IN5_1			**Mux input channel 5 of TIM module 2**
	EDSADC_ITR4F			**Trigger/Gate input**
	EDSADC_DSDIN2A			**Digital datastream input**
	SENT_SENT5B			**Receive input channel 5**
	ASCLIN5_ARXA			**Receive input**
	GTM_DTMA6_0			**CDTM6_DTM4**
	GTM_DTMT3_1			**CDTM3_DTM0**
	EVADC_G9CH6	AI		**Analog input channel 6, group 9**
	P00.6	O0		**General-purpose output**
	GTM_TOUT15	O1		**GTM muxed output**
	IOM_REF0_15			**Reference input 0**
	EDSADC_CGPWMP	O2		**Positive carrier generator output**
	EVADC_FC5BFLOUT	O3		**Boundary flag output, FC channel 5**
	PSI5_TX2	O4		**TXD outputs (send data)**
	IOM_REF1_15			**Reference input 1**
	EVADC_EMUX10	O5		**Control of external analog multiplexer interface 1**
	SENT_SPC5	O6		**Transmit output**
	CCU61_COUT62	O7		**T12 PWM channel 62**
	IOM_MON1_13			**Monitor input 1**
	IOM_REF1_8			**Reference input 1**

Downloaded by IFXDMZlpar-zengzhe 12/02/2019 11:04:31

Table 2-25 Port 00 Functions (cont'd)

Ball	Symbol	Ctrl.	Buffer Type	Function
K1	P00.7	I	SLOW / PU1 / VEXT / ES1	**General-purpose input**
	GTM_TIM3_IN6_1			**Mux input channel 6 of TIM module 3**
	GTM_TIM3_IN2_11			**Mux input channel 2 of TIM module 3**
	GTM_TIM2_IN6_1			**Mux input channel 6 of TIM module 2**
	CCU61_CC60INC			**T12 capture input 60**
	SENT_SENT6B			**Receive input channel 6**
	EDSADC_DSCIN4A			**Modulator clock input**
	GPT120_T2INA			**Trigger/gate input of timer T2**
	CCU61_CCPOS0A			**Hall capture input 0**
	CCU60_T12HRB			**External timer start 12**
	GTM_DTMT0_2			**CDTM0_DTM0**
	EVADC_G9CH5	AI		**Analog input channel 5, group 9**
	EDSADC_EDS4NA			**Negative analog input channel 4, pin A**
	P00.7	O0		**General-purpose output**
	GTM_TOUT16	O1		**GTM muxed output**
	ASCLIN5_ATX	O2		**Transmit output**
	EVADC_FC2BFLOUT	O3		**Boundary flag output, FC channel 2**
	EDSADC_DSCOUT4	O4		**Modulator clock output**
	EVADC_EMUX11	O5		**Control of external analog multiplexer interface 1**
	SENT_SPC6	O6		**Transmit output**
	CCU61_CC60	O7		**T12 PWM channel 60**
	IOM_MON1_8			**Monitor input 1**
	IOM_REF1_13			**Reference input 1**

Downloaded by IFXDMZ|par-zengzhe 12/02/2019 11:04:31

Table 2-25 Port 00 Functions (cont'd)

Ball	Symbol	Ctrl.	Buffer Type	Function
K4	P00.8	I	SLOW / PU1 / VEXT / ES1	**General-purpose input**
	GTM_TIM3_IN7_1			**Mux input channel 7 of TIM module 3**
	GTM_TIM3_IN3_11			**Mux input channel 3 of TIM module 3**
	GTM_TIM2_IN7_1			**Mux input channel 7 of TIM module 2**
	CCU61_CC61INC			**T12 capture input 61**
	SENT_SENT7B			**Receive input channel 7**
	EDSADC_DSDIN4A			**Digital datastream input**
	GPT120_T2EUDA			**Count direction control input of timer T2**
	CCU61_CCPOS1A			**Hall capture input 1**
	CCU60_T13HRB			**External timer start 13**
	ASCLIN10_ARXB			**Receive input**
	EVADC_G9CH4	AI		**Analog input channel 4, group 9**
	EDSADC_EDS4PA			**Positive analog input channel 4, pin A**
	P00.8	O0		**General-purpose output**
	GTM_TOUT17	O1		**GTM muxed output**
	QSPI3_SLSO6	O2		**Master slave select output**
	ASCLIN10_ATX	O3		**Transmit output**
	—	O4		**Reserved**
	EVADC_EMUX12	O5		**Control of external analog multiplexer interface 1**
	SENT_SPC7	O6		**Transmit output**
	CCU61_CC61	O7		**T12 PWM channel 61**
	IOM_MON1_9			**Monitor input 1**
	IOM_REF1_12			**Reference input 1**

Downloaded by IFXDMZlpar-zengzhe 12/02/2019 11:04:31

Table 2-25 Port 00 Functions (cont'd)

Ball	Symbol	Ctrl.	Buffer Type	Function
K2	P00.9	I	SLOW / PU1 / VEXT / ES1	**General-purpose input**
	GTM_TIM4_IN0_7			**Mux input channel 0 of TIM module 4**
	GTM_TIM1_IN0_1			**Mux input channel 0 of TIM module 1**
	GTM_TIM0_IN0_1			**Mux input channel 0 of TIM module 0**
	CCU61_CC62INC			**T12 capture input 62**
	SENT_SENT8B			**Receive input channel 8**
	CCU61_CCPOS2A			**Hall capture input 2**
	EDSADC_DSCIN1A			**Modulator clock input**
	EDSADC_ITR3F			**Trigger/Gate input**
	GPT120_T4EUDA			**Count direction control input of timer T4**
	CCU60_T13HRC			**External timer start 13**
	CCU60_T12HRC			**External timer start 12**
	EVADC_G9CH3	AI		**Analog input channel 3, group 9**
	EDSADC_EDS4NB			**Negative analog input channel 4, pin B**
	P00.9	O0		**General-purpose output**
	GTM_TOUT18	O1		**GTM muxed output**
	QSPI3_SLSO7	O2		**Master slave select output**
	ASCLIN3_ARTS	O3		**Ready to send output**
	EDSADC_DSCOUT1	O4		**Modulator clock output**
	ASCLIN4_ATX	O5		**Transmit output**
	SENT_SPC8	O6		**Transmit output**
	CCU61_CC62	O7		**T12 PWM channel 62**
	IOM_MON1_10			**Monitor input 1**
	IOM_REF1_11			**Reference input 1**

Downloaded by IFXDMZ|par-zengzhe 12/02/2019 11:04:31

Table 2-25 Port 00 Functions (cont'd)

Ball	Symbol	Ctrl.	Buffer Type	Function
K5	P00.10	I	SLOW / PU1 / VEXT / ES1	**General-purpose input**
	GTM_TIM4_IN1_11			**Mux input channel 1 of TIM module 4**
	GTM_TIM1_IN1_1			**Mux input channel 1 of TIM module 1**
	GTM_TIM0_IN1_1			**Mux input channel 1 of TIM module 0**
	SENT_SENT9B			**Receive input channel 9**
	EDSADC_DSDIN1A			**Digital datastream input**
	EVADC_G9CH2	AI		**Analog input channel 2, group 9**
	EDSADC_EDS4PB			**Positive analog input channel 4, pin B**
	P00.10	O0		**General-purpose output**
	GTM_TOUT19	O1		**GTM muxed output**
	ASCLIN4_ASCLK	O2		**Shift clock output**
	—	O3		**Reserved**
	—	O4		**Reserved**
	—	O5		**Reserved**
	SENT_SPC9	O6		**Transmit output**
	CCU61_COUT63	O7		**T13 PWM channel 63**
	IOM_MON1_7			**Monitor input 1**
	IOM_REF1_7			**Reference input 1**
L1	P00.11	I	SLOW / PU1 / VEXT / ES1	**General-purpose input**
	GTM_TIM4_IN2_11			**Mux input channel 2 of TIM module 4**
	GTM_TIM1_IN2_1			**Mux input channel 2 of TIM module 1**
	GTM_TIM0_IN2_1			**Mux input channel 2 of TIM module 0**
	CCU60_CTRAPA			**Trap input capture**
	EDSADC_DSCIN0A			**Modulator clock input**
	CCU61_T12HRE			**External timer start 12**
	SENT_SENT10B			**Receive input channel 10**
	EVADC_G9CH1	AI		**Analog input channel 1, group 9**
	EVADC_FC3CH0			**Analog input FC channel 3**
	P00.11	O0		**General-purpose output**
	GTM_TOUT20	O1		**GTM muxed output**
	ASCLIN4_ASLSO	O2		**Slave select signal output**
	—	O3		**Reserved**
	EDSADC_DSCOUT0	O4		**Modulator clock output**
	—	O5		**Reserved**
	—	O6		**Reserved**
	—	O7		**Reserved**

Downloaded by IFXDMZ|par-zengzhe 12/02/2019 11:04:31

Table 2-25 Port 00 Functions (cont'd)

Ball	Symbol	Ctrl.	Buffer Type	Function
L2	P00.12	I	SLOW / PU1 / VEXT / ES1	**General-purpose input**
	GTM_TIM4_IN3_11			**Mux input channel 3 of TIM module 4**
	GTM_TIM1_IN3_1			**Mux input channel 3 of TIM module 1**
	GTM_TIM0_IN3_1			**Mux input channel 3 of TIM module 0**
	ASCLIN3_ACTSA			**Clear to send input**
	EDSADC_DSDIN0A			**Digital datastream input**
	ASCLIN4_ARXA			**Receive input**
	SENT_SENT11B			**Receive input channel 11**
	EVADC_G9CH0	AI		**Analog input channel 0, group 9**
	EVADC_FC2CH0			**Analog input FC channel 2**
	P00.12	O0		**General-purpose output**
	GTM_TOUT21	O1		**GTM muxed output**
	—	O2		**Reserved**
	—	O3		**Reserved**
	—	O4		**Reserved**
	—	O5		**Reserved**
	—	O6		**Reserved**
	CCU61_COUT63	O7		**T13 PWM channel 63**
	IOM_MON1_7			**Monitor input 1**
	IOM_REF1_7			**Reference input 1**

Downloaded by IFXDMZ|par-zengzhe 12/02/2019 11:04:31

Table 2-26 Port 01 Functions

Ball	Symbol	Ctrl.	Buffer Type	Function
G5	P01.3	I	SLOW / PU1 / VEXT / ES	**General-purpose input**
	GTM_TIM4_IN5_2			**Mux input channel 5 of TIM module 4**
	GTM_TIM2_IN0_14			**Mux input channel 0 of TIM module 2**
	GTM_TIM0_IN5_8			**Mux input channel 5 of TIM module 0**
	QSPI3_SLSIB			**Slave select input**
	EDSADC_ITR7F			**Trigger/Gate input**
	EVADC_G9CH14	AI		**Analog input channel 14, group 9**
	P01.3	O0		**General-purpose output**
	GTM_TOUT111	O1		**GTM muxed output**
	—	O2		**Reserved**
	—	O3		**Reserved**
	QSPI3_SLSO9	O4		**Master slave select output**
	CAN01_TXD	O5		**CAN transmit output node 1**
	IOM_MON2_6			**Monitor input 2**
	IOM_REF2_6			**Reference input 2**
	—	O6		**Reserved**
	—	O7		**Reserved**
G4	P01.4	I	SLOW / PU1 / VEXT / ES	**General-purpose input**
	GTM_TIM4_IN6_2			**Mux input channel 6 of TIM module 4**
	GTM_TIM2_IN1_14			**Mux input channel 1 of TIM module 2**
	GTM_TIM0_IN6_8			**Mux input channel 6 of TIM module 0**
	CAN01_RXDC			**CAN receive input node 1**
	EDSADC_ITR7E			**Trigger/Gate input**
	EVADC_G9CH13	AI		**Analog input channel 13, group 9**
	P01.4	O0		**General-purpose output**
	GTM_TOUT112	O1		**GTM muxed output**
	—	O2		**Reserved**
	ASCLIN9_ASLSO	O3		**Slave select signal output**
	QSPI3_SLSO10	O4		**Master slave select output**
	—	O5		**Reserved**
	—	O6		**Reserved**
	—	O7		**Reserved**

Downloaded by IFXDMZ|par-zengzhe 12/02/2019 11:04:31

Table 2-26 Port 01 Functions (cont'd)

Ball	Symbol	Ctrl.	Buffer Type	Function
H5	P01.5	I	SLOW / PU1 / VEXT / ES	**General-purpose input**
	GTM_TIM5_IN3_2			**Mux input channel 3 of TIM module 5**
	GTM_TIM2_IN3_7			**Mux input channel 3 of TIM module 2**
	GTM_TIM2_IN2_7			**Mux input channel 2 of TIM module 2**
	QSPI3_MRSTC			**Master SPI data input**
	EDSADC_DSCIN8A			**Modulator clock input**
	ASCLIN9_ARXA			**Receive input**
	EVADC_G9CH12	AI		**Analog input channel 12, group 9**
	P01.5	O0		**General-purpose output**
	GTM_TOUT113	O1		**GTM muxed output**
	—	O2		**Reserved**
	—	O3		**Reserved**
	QSPI3_MRST	O4		**Slave SPI data output**
	IOM_MON2_3			**Monitor input 2**
	IOM_REF2_3			**Reference input 2**
	—	O5		**Reserved**
	EDSADC_DSCOUT8	O6		**Modulator clock output**
	—	O7		**Reserved**
H4	P01.6	I	FAST / PU1 / VEXT / ES	**General-purpose input**
	GTM_TIM5_IN6_2			**Mux input channel 6 of TIM module 5**
	GTM_TIM5_IN5_3			**Mux input channel 5 of TIM module 5**
	GTM_TIM2_IN5_7			**Mux input channel 5 of TIM module 2**
	QSPI3_MTSRC			**Save SPI data input**
	EDSADC_DSDIN8A			**Digital datastream input**
	P01.6	O0		**General-purpose output**
	GTM_TOUT114	O1		**GTM muxed output**
	—	O2		**Reserved**
	ASCLIN9_ASCLK	O3		**Shift clock output**
	QSPI3_MTSR	O4		**Master SPI data output**
	—	O5		**Reserved**
	—	O6		**Reserved**
	—	O7		**Reserved**

Downloaded by IFXDMZlpar-zengzhe 12/02/2019 11:04:31

Table 2-26 Port 01 Functions (cont'd)

Ball	Symbol	Ctrl.	Buffer Type	Function
J5	P01.7	I	FAST / PU1 / VEXT / ES	**General-purpose input**
	GTM_TIM5_IN7_2			**Mux input channel 7 of TIM module 5**
	GTM_TIM2_IN7_7			**Mux input channel 7 of TIM module 2**
	QSPI3_SCLKC			**Slave SPI clock inputs**
	EDSADC_ITR8F			**Trigger/Gate input**
	ASCLIN9_ARXB			**Receive input**
	P01.7	O0		**General-purpose output**
	GTM_TOUT115	O1		**GTM muxed output**
	—	O2		**Reserved**
	ASCLIN9_ATX	O3		**Transmit output**
	QSPI3_SCLK	O4		**Master SPI clock output**
	—	O5		**Reserved**
	—	O6		**Reserved**
	—	O7		**Reserved**

Downloaded by IFXDMZ|par-zengzhe 12/02/2019 11:04:31

Table 2-27 Port 02 Functions

Ball	Symbol	Ctrl.	Buffer Type	Function
B1	P02.0	I	FAST / PU1 / VEXT / ES	**General-purpose input**
	GTM_TIM1_IN0_2			**Mux input channel 0 of TIM module 1**
	GTM_TIM0_IN0_2			**Mux input channel 0 of TIM module 0**
	CCU61_CC60INB			**T12 capture input 60**
	ASCLIN2_ARXG			**Receive input**
	CCU60_CC60INA			**T12 capture input 60**
	SCU_E_REQ3_2			**ERU Channel 3 inputs 0 to 5 (0 is the LSB and 5 is the MSB)**
	GTM_DTMA0_0			**CDTM0_DTM4**
	P02.0	O0		**General-purpose output**
	GTM_TOUT0	O1		**GTM muxed output**
	IOM_REF0_0			**Reference input 0**
	ASCLIN2_ATX	O2		**Transmit output**
	IOM_MON2_14			**Monitor input 2**
	IOM_REF2_14			**Reference input 2**
	QSPI3_SLSO1	O3		**Master slave select output**
	EDSADC_CGPWMN	O4		**Negative carrier generator output**
	CAN00_TXD	O5		**CAN transmit output node 0**
	IOM_MON2_5			**Monitor input 2**
	IOM_REF2_5			**Reference input 2**
	ERAY0_TXDA	O6		**Transmit Channel A**
	CCU60_CC60	O7		**T12 PWM channel 60**
	IOM_MON1_2			**Monitor input 1**
	IOM_REF1_6			**Reference input 1**

Downloaded by IFXDMZlpar-zengzhe 12/02/2019 11:04:31

Table 2-27 Port 02 Functions (cont'd)

Ball	Symbol	Ctrl.	Buffer Type	Function
C2	P02.1	I	SLOW / PU1 / VEXT / ES	**General-purpose input**
	GTM_TIM1_IN1_2			**Mux input channel 1 of TIM module 1**
	GTM_TIM0_IN1_2			**Mux input channel 1 of TIM module 0**
	ERAY0_RXDA2			**Receive Channel A2**
	ASCLIN2_ARXB			**Receive input**
	CAN00_RXDA			**CAN receive input node 0**
	SCU_E_REQ2_1			**ERU Channel 2 inputs 0 to 5 (0 is the LSB and 5 is the MSB)**
	P02.1	O0		**General-purpose output**
	GTM_TOUT1	O1		**GTM muxed output**
	IOM_REF0_1			**Reference input 0**
	QSPI4_SLSO7	O2		**Master slave select output**
	QSPI3_SLSO2	O3		**Master slave select output**
	EDSADC_CGPWMP	O4		**Positive carrier generator output**
	—	O5		**Reserved**
	—	O6		**Reserved**
	CCU60_COUT60	O7		**T12 PWM channel 60**
	IOM_MON1_3			**Monitor input 1**
	IOM_REF1_3			**Reference input 1**

Downloaded by IFXDMZlpar-zengzhe 12/02/2019 11:04:31

Table 2-27 Port 02 Functions (cont'd)

Ball	Symbol	Ctrl.	Buffer Type	Function
C1	P02.2	I	FAST / PU1 / VEXT / ES	**General-purpose input**
	GTM_TIM1_IN2_2			**Mux input channel 2 of TIM module 1**
	GTM_TIM0_IN2_2			**Mux input channel 2 of TIM module 0**
	CCU61_CC61INB			**T12 capture input 61**
	CCU60_CC61INA			**T12 capture input 61**
	SENT_SENT14B			**Receive input channel 14**
	P02.2	O0		**General-purpose output**
	GTM_TOUT2	O1		**GTM muxed output**
	IOM_REF0_2			**Reference input 0**
	ASCLIN1_ATX	O2		**Transmit output**
	IOM_MON2_13			**Monitor input 2**
	IOM_REF2_13			**Reference input 2**
	QSPI3_SLSO3	O3		**Master slave select output**
	PSI5_TX0	O4		**TXD outputs (send data)**
	IOM_MON1_14			**Monitor input 1**
	IOM_REF1_14			**Reference input 1**
	CAN02_TXD	O5		**CAN transmit output node 2**
	IOM_MON2_7			**Monitor input 2**
	IOM_REF2_7			**Reference input 2**
	ERAY0_TXDB	O6		**Transmit Channel B**
	CCU60_CC61	O7		**T12 PWM channel 61**
	IOM_MON1_1			**Monitor input 1**
	IOM_REF1_5			**Reference input 1**

Downloaded by IFXDMZ|par-zengzhe 12/02/2019 11:04:31

Table 2-27 Port 02 Functions (cont'd)

Ball	Symbol	Ctrl.	Buffer Type	Function
D2	P02.3	I	SLOW / PU1 / VEXT / ES	**General-purpose input**
	GTM_TIM1_IN3_2			**Mux input channel 3 of TIM module 1**
	GTM_TIM0_IN3_2			**Mux input channel 3 of TIM module 0**
	EDSADC_DSCIN5B			**Modulator clock input**
	ERAY0_RXDB2			**Receive Channel B2**
	CAN02_RXDB			**CAN receive input node 2**
	ASCLIN1_ARXG			**Receive input**
	MSC1_SDI1			**Upstream assynchronous input signal**
	PSI5_RX0B			**RXD inputs (receive data) channel 0**
	SENT_SENT13B			**Receive input channel 13**
	P02.3	O0		**General-purpose output**
	GTM_TOUT3	O1		**GTM muxed output**
	IOM_REF0_3			**Reference input 0**
	ASCLIN2_ASLSO	O2		**Slave select signal output**
	QSPI3_SLSO4	O3		**Master slave select output**
	EDSADC_DSCOUT5	O4		**Modulator clock output**
	—	O5		**Reserved**
	—	O6		**Reserved**
	CCU60_COUT61	O7		**T12 PWM channel 61**
	IOM_MON1_4			**Monitor input 1**
	IOM_REF1_2			**Reference input 1**

Downloaded by IFXDMZ|par-zengzhe 12/02/2019 11:04:31

Table 2-27 Port 02 Functions (cont'd)

Ball	Symbol	Ctrl.	Buffer Type	Function
D1	P02.4	I	FAST / PU1 / VEXT / ES	**General-purpose input**
	GTM_TIM1_IN4_1			**Mux input channel 4 of TIM module 1**
	GTM_TIM0_IN4_1			**Mux input channel 4 of TIM module 0**
	CCU61_CC62INB			**T12 capture input 62**
	EDSADC_DSDIN5B			**Digital datastream input**
	QSPI3_SLSIA			**Slave select input**
	CCU60_CC62INA			**T12 capture input 62**
	I2C0_SDAA			**Serial Data Input**
	CAN11_RXDA			**CAN receive input node 1**
	CAN0_ECTT1			**External CAN time trigger input**
	SENT_SENT12B			**Receive input channel 12**
	P02.4	O0		**General-purpose output**
	GTM_TOUT4	O1		**GTM muxed output**
	IOM_REF0_4			**Reference input 0**
	ASCLIN2_ASCLK	O2		**Shift clock output**
	QSPI3_SLSO0	O3		**Master slave select output**
	PSI5S_CLK	O4		**PSISCLK is a clock that can be used on a pin to drive the external PHY.**
	I2C0_SDA	O5		**Serial Data Output**
	ERAY0_TXENA	O6		**Transmit Enable Channel A**
	CCU60_CC62	O7		**T12 PWM channel 62**
	IOM_MON1_0			**Monitor input 1**
	IOM_REF1_4			**Reference input 1**

Downloaded by IFXDMZlpar-zengzhe 12/02/2019 11:04:31

Table 2-27 Port 02 Functions (cont'd)

Ball	Symbol	Ctrl.	Buffer Type	Function
E2	P02.5	I	FAST / PU1 / VEXT / ES	**General-purpose input**
	GTM_TIM1_IN5_1			**Mux input channel 5 of TIM module 1**
	GTM_TIM0_IN5_1			**Mux input channel 5 of TIM module 0**
	EDSADC_DSCIN4B			**Modulator clock input**
	I2C0_SCLA			**Serial Clock Input**
	PSI5_RX1B			**RXD inputs (receive data) channel 1**
	PSI5S_RXB			**RX data input**
	QSPI3_MRSTA			**Master SPI data input**
	SENT_SENT3C			**Receive input channel 3**
	CAN0_ECTT2			**External CAN time trigger input**
	P02.5	O0		**General-purpose output**
	GTM_TOUT5	O1		**GTM muxed output**
	IOM_REF0_5			**Reference input 0**
	CAN11_TXD	O2		**CAN transmit output node 1**
	QSPI3_MRST	O3		**Slave SPI data output**
	IOM_MON2_3			**Monitor input 2**
	IOM_REF2_3			**Reference input 2**
	EDSADC_DSCOUT4	O4		**Modulator clock output**
	I2C0_SCL	O5		**Serial Clock Output**
	ERAY0_TXENB	O6		**Transmit Enable Channel B**
	CCU60_COUT62	O7		**T12 PWM channel 62**
	IOM_MON1_5			**Monitor input 1**
	IOM_REF1_1			**Reference input 1**

Downloaded by IFXDMZlpar-zengzhe 12/02/2019 11:04:31

Table 2-27 Port 02 Functions (cont'd)

Ball	Symbol	Ctrl.	Buffer Type	Function
E1	P02.6	I	FAST / PU1 / VEXT / ES	**General-purpose input**
	GTM_TIM3_IN0_10			**Mux input channel 0 of TIM module 3**
	GTM_TIM1_IN6_1			**Mux input channel 6 of TIM module 1**
	GTM_TIM0_IN6_1			**Mux input channel 6 of TIM module 0**
	CCU60_CC60INC			**T12 capture input 60**
	SENT_SENT2C			**Receive input channel 2**
	EDSADC_DSDIN4B			**Digital datastream input**
	EDSADC_ITR5E			**Trigger/Gate input**
	GPT120_T3INA			**Trigger/gate input of core timer T3**
	CCU60_CCPOS0A			**Hall capture input 0**
	CCU61_T12HRB			**External timer start 12**
	QSPI3_MTSRA			**Save SPI data input**
	RIF0_RAMP1B			**External RAMP B input**
	P02.6	O0		**General-purpose output**
	GTM_TOUT6	O1		**GTM muxed output**
	IOM_REF0_6			**Reference input 0**
	PSI5S_TX	O2		**TX data output**
	QSPI3_MTSR	O3		**Master SPI data output**
	PSI5_TX1	O4		**TXD outputs (send data)**
	IOM_MON1_15			**Monitor input 1**
	EVADC_EMUX00	O5		**Control of external analog multiplexer interface 0**
	—	O6		**Reserved**
	CCU60_CC60	O7		**T12 PWM channel 60**
	IOM_MON1_2			**Monitor input 1**
	IOM_REF1_6			**Reference input 1**

Downloaded by IFXDMZ|par-zengzhe 12/02/2019 11:04:31

Table 2-27 Port 02 Functions (cont'd)

Ball	Symbol	Ctrl.	Buffer Type	Function
F2	P02.7	I	FAST / PU1 / VEXT / ES	**General-purpose input**
	GTM_TIM3_IN1_10			**Mux input channel 1 of TIM module 3**
	GTM_TIM1_IN7_1			**Mux input channel 7 of TIM module 1**
	GTM_TIM0_IN7_1			**Mux input channel 0 of TIM module 0**
	CCU60_CC61INC			**T12 capture input 61**
	SENT_SENT1C			**Receive input channel 1**
	EDSADC_DSCIN3B			**Modulator clock input**
	EDSADC_ITR4E			**Trigger/Gate input**
	GPT120_T3EUDA			**Count direction control input of core timer T3**
	PSI5_RX2B			**RXD inputs (receive data) channel 2**
	CCU60_CCPOS1A			**Hall capture input 1**
	QSPI3_SCLKA			**Slave SPI clock inputs**
	CCU61_T13HRB			**External timer start 13**
	P02.7	O0		**General-purpose output**
	GTM_TOUT7	O1		**GTM muxed output**
	IOM_REF0_7			**Reference input 0**
	—	O2		**Reserved**
	QSPI3_SCLK	O3		**Master SPI clock output**
	EDSADC_DSCOUT3	O4		**Modulator clock output**
	EVADC_EMUX01	O5		**Control of external analog multiplexer interface 0**
	SENT_SPC1	O6		**Transmit output**
	CCU60_CC61	O7		**T12 PWM channel 61**
	IOM_MON1_1			**Monitor input 1**
	IOM_REF1_5			**Reference input 1**

Downloaded by IFXDMZ|par-zengzhe 12/02/2019 11:04:31

Table 2-27 Port 02 Functions (cont'd)

Ball	Symbol	Ctrl.	Buffer Type	Function
F1	P02.8	I	SLOW / PU1 / VEXT / ES	**General-purpose input**
	GTM_TIM3_IN2_10			**Mux input channel 2 of TIM module 3**
	GTM_TIM3_IN0_2			**Mux input channel 0 of TIM module 3**
	GTM_TIM2_IN0_2			**Mux input channel 0 of TIM module 2**
	CCU60_CC62INC			**T12 capture input 62**
	SENT_SENT0C			**Receive input channel 0**
	CCU60_CCPOS2A			**Hall capture input 2**
	EDSADC_DSDIN3B			**Digital datastream input**
	EDSADC_ITR3E			**Trigger/Gate input**
	GPT120_T4INA			**Trigger/gate input of timer T4**
	CCU61_T12HRC			**External timer start 12**
	CCU61_T13HRC			**External timer start 13**
	GTM_DTMA0_1			**CDTM0_DTM4**
	PMS_PMS_TESTGND_PAD	AI		**Analog GND out for direct connection to GPIO**
	P02.8	O0		**General-purpose output**
	GTM_TOUT8	O1		**GTM muxed output**
	IOM_REF0_8			**Reference input 0**
	QSPI3_SLSO5	O2		**Master slave select output**
	ASCLIN8_ASCLK	O3		**Shift clock output**
	PSI5_TX2	O4		**TXD outputs (send data)**
	IOM_REF1_15			**Reference input 1**
	EVADC_EMUX02	O5		**Control of external analog multiplexer interface 0**
	GETH_MDC	O6		**MDIO clock**
	CCU60_CC62	O7		**T12 PWM channel 62**
	IOM_MON1_0			**Monitor input 1**
	IOM_REF1_4			**Reference input 1**

Downloaded by IFXDMZlpar-zengzhe 12/02/2019 11:04:31

Table 2-27 Port 02 Functions (cont'd)

Ball	Symbol	Ctrl.	Buffer Type	Function
E4	P02.9	I	SLOW / PU1 / VEXT / ES	**General-purpose input**
	GTM_TIM4_IN2_2			**Mux input channel 2 of TIM module 4**
	GTM_TIM3_IN3_10			**Mux input channel 3 of TIM module 3**
	GTM_TIM0_IN2_10			**Mux input channel 2 of TIM module 0**
	SENT_SENT20B			**Receive input channel 20**
	ASCLIN8_ARXA			**Receive input**
	P02.9	O0		**General-purpose output**
	GTM_TOUT116	O1		**GTM muxed output**
	ASCLIN2_ATX	O2		**Transmit output**
	IOM_MON2_14			**Monitor input 2**
	IOM_REF2_14			**Reference input 2**
	ASCLIN8_ATX	O3		**Transmit output**
	—	O4		**Reserved**
	CAN01_TXD	O5		**CAN transmit output node 1**
	IOM_MON2_6			**Monitor input 2**
	IOM_REF2_6			**Reference input 2**
	—	O6		**Reserved**
	—	O7		**Reserved**
F5	P02.10	I	SLOW / PU1 / VEXT / ES	**General-purpose input**
	GTM_TIM4_IN3_2			**Mux input channel 3 of TIM module 4**
	GTM_TIM3_IN4_11			**Mux input channel 4 of TIM module 3**
	GTM_TIM0_IN3_10			**Mux input channel 3 of TIM module 0**
	ASCLIN2_ARXC			**Receive input**
	CAN01_RXDE			**CAN receive input node 1**
	SENT_SENT21B			**Receive input channel 21**
	ASCLIN8_ARXB			**Receive input**
	P02.10	O0		**General-purpose output**
	GTM_TOUT117	O1		**GTM muxed output**
	—	O2		**Reserved**
	—	O3		**Reserved**
	—	O4		**Reserved**
	—	O5		**Reserved**
	—	O6		**Reserved**
	—	O7		**Reserved**

Downloaded by IFXDMZ|par-zengzhe 12/02/2019 11:04:31

Table 2-27 Port 02 Functions (cont'd)

Ball	Symbol	Ctrl.	Buffer Type	Function
F4	P02.11	I	SLOW / PU1 / VEXT / ES	**General-purpose input**
	GTM_TIM4_IN4_3			**Mux input channel 4 of TIM module 4**
	GTM_TIM3_IN5_12			**Mux input channel 5 of TIM module 3**
	GTM_TIM0_IN7_7			**Mux input channel 0 of TIM module 0**
	SENT_SENT22B			**Receive input channel 22**
	EVADC_G9CH15	AI		**Analog input channel 15, group 9**
	P02.11	O0		**General-purpose output**
	GTM_TOUT118	O1		**GTM muxed output**
	—	O2		**Reserved**
	ASCLIN8_ASLSO	O3		**Slave select signal output**
	—	O4		**Reserved**
	—	O5		**Reserved**
	—	O6		**Reserved**
	—	O7		**Reserved**

Table 2-28 Port 10 Functions

Ball	Symbol	Ctrl.	Buffer Type	Function
A7	P10.0	I	SLOW / PU1 / VEXT / ES	**General-purpose input**
	GTM_TIM4_IN0_12			**Mux input channel 0 of TIM module 4**
	GTM_TIM1_IN4_2			**Mux input channel 4 of TIM module 1**
	GTM_TIM0_IN4_2			**Mux input channel 4 of TIM module 0**
	GPT120_T6EUDB			**Count direction control input of core timer T6**
	ASCLIN11_ARXA			**Receive input**
	GETH_RXERC			**Receive Error MII**
	GTM_DTMA5_2			**CDTM5_DTM4**
	P10.0	O0		**General-purpose output**
	GTM_TOUT102	O1		**GTM muxed output**
	ASCLIN11_ATX	O2		**Transmit output**
	QSPI1_SLSO10	O3		**Master slave select output**
	—	O4		**Reserved**
	EVADC_FC6BFLOUT	O5		**Boundary flag output, FC channel 6**
	—	O6		**Reserved**
	—	O7		**Reserved**

Downloaded by IFXDMZlpar-zengzhe 12/02/2019 11:04:31

Table 2-28 Port 10 Functions (cont'd)

Ball	Symbol	Ctrl.	Buffer Type	Function
B7	P10.1	I	FAST / PU1 / VEXT / ES	**General-purpose input**
	GTM_TIM4_IN4_12			**Mux input channel 4 of TIM module 4**
	GTM_TIM1_IN1_3			**Mux input channel 1 of TIM module 1**
	GTM_TIM0_IN1_3			**Mux input channel 1 of TIM module 0**
	GPT120_T5EUDB			**Count direction control input of timer T5**
	QSPI1_MRSTA			**Master SPI data input**
	GTM_DTMT0_1			**CDTM0_DTM0**
	P10.1	O0		**General-purpose output**
	GTM_TOUT103	O1		**GTM muxed output**
	QSPI1_MTSR	O2		**Master SPI data output**
	QSPI1_MRST	O3		**Slave SPI data output**
	IOM_MON2_1			**Monitor input 2**
	IOM_REF2_1			**Reference input 2**
	MSC0_EN1	O4		**Chip Select**
	EVADC_FC1BFLOUT	O5		**Boundary flag output, FC channel 1**
	—	O6		**Reserved**
	—	O7		**Reserved**
A5	P10.2	I	FAST / PU1 / VEXT / ES	**General-purpose input**
	GTM_TIM4_IN5_12			**Mux input channel 5 of TIM module 4**
	GTM_TIM1_IN2_3			**Mux input channel 2 of TIM module 1**
	GTM_TIM0_IN2_3			**Mux input channel 2 of TIM module 0**
	CAN02_RXDE			**CAN receive input node 2**
	MSC0_SDI1			**Upstream assynchronous input signal**
	QSPI1_SCLKA			**Slave SPI clock inputs**
	GPT120_T6INB			**Trigger/gate input of core timer T6**
	SCU_E_REQ2_0			**ERU Channel 2 inputs 0 to 5 (0 is the LSB and 5 is the MSB)**
	GTM_DTMT2_2			**CDTM2_DTM0**
	P10.2	O0		**General-purpose output**
	GTM_TOUT104	O1		**GTM muxed output**
	IOM_MON2_9			**Monitor input 2**
	—	O2		**Reserved**
	QSPI1_SCLK	O3		**Master SPI clock output**
	MSC0_EN0	O4		**Chip Select**
	EVADC_FC3BFLOUT	O5		**Boundary flag output, FC channel 3**
	—	O6		**Reserved**
	—	O7		**Reserved**

Downloaded by IFXDMZlpar-zengzhe 12/02/2019 11:04:31

Table 2-28 Port 10 Functions (cont'd)

Ball	Symbol	Ctrl.	Buffer Type	Function
A6	P10.3	I	FAST / PU1 / VEXT / ES	**General-purpose input**
	GTM_TIM4_IN6_10			**Mux input channel 6 of TIM module 4**
	GTM_TIM1_IN3_3			**Mux input channel 3 of TIM module 1**
	GTM_TIM0_IN3_3			**Mux input channel 3 of TIM module 0**
	QSPI1_MTSRA			**Save SPI data input**
	SCU_E_REQ3_0			**ERU Channel 3 inputs 0 to 5 (0 is the LSB and 5 is the MSB)**
	GPT120_T5INB			**Trigger/gate input of timer T5**
	P10.3	O0		**General-purpose output**
	GTM_TOUT105	O1		**GTM muxed output**
	IOM_MON2_10			**Monitor input 2**
	—	O2		**Reserved**
	QSPI1_MTSR	O3		**Master SPI data output**
	MSC0_EN0	O4		**Chip Select**
	—	O5		**Reserved**
	CAN02_TXD	O6		**CAN transmit output node 2**
	IOM_MON2_7			**Monitor input 2**
	IOM_REF2_7			**Reference input 2**
	—	O7		**Reserved**
B6	P10.4	I	FAST / PU1 / VEXT / ES	**General-purpose input**
	GTM_TIM4_IN7_3			**Mux input channel 7 of TIM module 4**
	GTM_TIM1_IN6_2			**Mux input channel 6 of TIM module 1**
	GTM_TIM0_IN6_2			**Mux input channel 6 of TIM module 0**
	QSPI1_MTSRC			**Save SPI data input**
	CCU60_CCPOS0C			**Hall capture input 0**
	GPT120_T3INB			**Trigger/gate input of core timer T3**
	ASCLIN11_ARXB			**Receive input**
	P10.4	O0		**General-purpose output**
	GTM_TOUT106	O1		**GTM muxed output**
	IOM_MON2_11			**Monitor input 2**
	—	O2		**Reserved**
	QSPI1_SLSO8	O3		**Master slave select output**
	QSPI1_MTSR	O4		**Master SPI data output**
	MSC0_EN0	O5		**Chip Select**
	—	O6		**Reserved**
	—	O7		**Reserved**

Downloaded by IFXDMZlpar-zengzhe 12/02/2019 11:04:31

Table 2-28 Port 10 Functions (cont'd)

Ball	Symbol	Ctrl.	Buffer Type	Function
B5	P10.5	I	SLOW / PU2 / VEXT / ES	**General-purpose input**
	GTM_TIM4_IN3_13			**Mux input channel 3 of TIM module 4**
	GTM_TIM1_IN2_4			**Mux input channel 2 of TIM module 1**
	GTM_TIM0_IN2_4			**Mux input channel 2 of TIM module 0**
	SCU_PD_HWCFG4			**Hardware configuration pin 4**
	CAN20_RXDA			**CAN receive input node 0**
	MSC0_INJ1			**Injection signal from port**
	P10.5	O0		**General-purpose output**
	GTM_TOUT107	O1		**GTM muxed output**
	IOM_REF2_9			**Reference input 2**
	ASCLIN2_ATX	O2		**Transmit output**
	IOM_MON2_14			**Monitor input 2**
	IOM_REF2_14			**Reference input 2**
	QSPI3_SLSO8	O3		**Master slave select output**
	QSPI1_SLSO9	O4		**Master slave select output**
	GPT120_T6OUT	O5		**External output for overflow/underflow detection of core timer T6**
	ASCLIN2_ASLSO	O6		**Slave select signal output**
	PSI5_TX3	O7		**TXD outputs (send data)**

Downloaded by IFXDMZ|par-zengzhe 12/02/2019 11:04:31

Table 2-28 Port 10 Functions (cont'd)

Ball	Symbol	Ctrl.	Buffer Type	Function
A4	P10.6	I	SLOW / PU2 / VEXT / ES	**General-purpose input**
	GTM_TIM4_IN2_13			**Mux input channel 2 of TIM module 4**
	GTM_TIM1_IN3_4			**Mux input channel 3 of TIM module 1**
	GTM_TIM0_IN3_4			**Mux input channel 3 of TIM module 0**
	PSI5_RX3C			**RXD inputs (receive data) channel 3**
	ASCLIN2_ARXD			**Receive input**
	QSPI3_MTSRB			**Save SPI data input**
	SCU_PD_HWCFG5			**Hardware configuration pin 5**
	P10.6	O0		**General-purpose output**
	GTM_TOUT108	O1		**GTM muxed output**
	IOM_REF2_10			**Reference input 2**
	ASCLIN2_ASCLK	O2		**Shift clock output**
	QSPI3_MTSR	O3		**Master SPI data output**
	GPT120_T3OUT	O4		**External output for overflow/underflow detection of core timer T3**
	CAN20_TXD	O5		**CAN transmit output node 0**
	QSPI1_MRST	O6		**Slave SPI data output**
	IOM_MON2_1			**Monitor input 2**
	IOM_REF2_1			**Reference input 2**
	EVADC_FC7BFLOUT	O7		**Boundary flag output, FC channel 7**

Downloaded by IFXDMZlpar-zengzhe 12/02/2019 11:04:31

Table 2-28 Port 10 Functions (cont'd)

Ball	Symbol	Ctrl.	Buffer Type	Function
A3	P10.7	I	SLOW / PU1 / VEXT / ES	**General-purpose input**
	GTM_TIM1_IN0_3			**Mux input channel 0 of TIM module 1**
	GTM_TIM0_IN0_3			**Mux input channel 0 of TIM module 0**
	GPT120_T3EUDB			**Count direction control input of core timer T3**
	ASCLIN2_ACTSA			**Clear to send input**
	QSPI3_MRSTB			**Master SPI data input**
	SCU_E_REQ0_2			**ERU Channel 0 inputs 0 to 5 (0 is the LSB and 5 is the MSB)**
	CCU60_CCPOS1C			**Hall capture input 1**
	P10.7	O0		**General-purpose output**
	GTM_TOUT109	O1		**GTM muxed output**
	IOM_REF2_11			**Reference input 2**
	—	O2		**Reserved**
	QSPI3_MRST	O3		**Slave SPI data output**
	IOM_MON2_3			**Monitor input 2**
	IOM_REF2_3			**Reference input 2**
	—	O4		**Reserved**
	CAN20_TXD	O5		**CAN transmit output node 0**
	CAN12_TXD	O6		**CAN transmit output node 2**
	—	O7		**Reserved**

Downloaded by IFXDMZ|par-zengzhe 12/02/2019 11:04:31

Table 2-28 Port 10 Functions (cont'd)

Ball	Symbol	Ctrl.	Buffer Type	Function
B4	P10.8	I	SLOW / PU1 / VEXT / ES	**General-purpose input**
	GTM_TIM4_IN0_13			**Mux input channel 0 of TIM module 4**
	GTM_TIM1_IN5_2			**Mux input channel 5 of TIM module 1**
	GTM_TIM0_IN5_2			**Mux input channel 5 of TIM module 0**
	CAN12_RXDB			**CAN receive input node 2**
	GPT120_T4INB			**Trigger/gate input of timer T4**
	QSPI3_SCLKB			**Slave SPI clock inputs**
	SCU_E_REQ1_2			**ERU Channel 1 inputs 0 to 5 (0 is the LSB and 5 is the MSB)**
	CCU60_CCPOS2C			**Hall capture input 2**
	CAN20_RXDB			**CAN receive input node 0**
	RIF1_RAMP1B			**External RAMP B input**
	P10.8	O0		**General-purpose output**
	GTM_TOUT110	O1		**GTM muxed output**
	ASCLIN2_ARTS	O2		**Ready to send output**
	QSPI3_SCLK	O3		**Master SPI clock output**
	—	O4		**Reserved**
	—	O5		**Reserved**
	—	O6		**Reserved**
	—	O7		**Reserved**

Downloaded by IFXDMZlpar-zengzhe 12/02/2019 11:04:31

Table 2-29 Port 11 Functions

Ball	Symbol	Ctrl.	Buffer Type	Function
E10	P11.0	I	RFAST / PU1 / VFLEX / ES	**General-purpose input**
	GTM_TIM7_IN5_1			**Mux input channel 5 of TIM module 7**
	GTM_TIM4_IN0_4			**Mux input channel 0 of TIM module 4**
	GTM_TIM2_IN0_7			**Mux input channel 0 of TIM module 2**
	ASCLIN3_ARXB			**Receive input**
	GTM_DTMA2_1			**CDTM2_DTM4**
	P11.0	O0		**General-purpose output**
	GTM_TOUT119	O1		**GTM muxed output**
	ASCLIN3_ATX	O2		**Transmit output**
	IOM_MON2_15			**Monitor input 2**
	IOM_REF2_15			**Reference input 2**
	—	O3		**Reserved**
	—	O4		**Reserved**
	CAN11_TXD	O5		**CAN transmit output node 1**
	GETH_TXD3	O6		**Transmit Data**
	—	O7		**Reserved**
E9	P11.1	I	RFAST / PU1 / VFLEX / ES	**General-purpose input**
	GTM_TIM7_IN6_1			**Mux input channel 6 of TIM module 7**
	GTM_TIM4_IN1_5			**Mux input channel 1 of TIM module 4**
	GTM_TIM2_IN1_6			**Mux input channel 1 of TIM module 2**
	P11.1	O0		**General-purpose output**
	GTM_TOUT120	O1		**GTM muxed output**
	ASCLIN3_ASCLK	O2		**Shift clock output**
	ASCLIN3_ATX	O3		**Transmit output**
	IOM_MON2_15			**Monitor input 2**
	IOM_REF2_15			**Reference input 2**
	—	O4		**Reserved**
	CAN12_TXD	O5		**CAN transmit output node 2**
	GETH_TXD2	O6		**Transmit Data**
	—	O7		**Reserved**

Downloaded by IFXDMZ|par-zengzhe 12/02/2019 11:04:31

Table 2-29 Port 11 Functions (cont'd)

Ball	Symbol	Ctrl.	Buffer Type	Function
A10	P11.2	I	RFAST / PU1 / VFLEX / ES	**General-purpose input**
	GTM_TIM3_IN1_3			**Mux input channel 1 of TIM module 3**
	GTM_TIM2_IN1_3			**Mux input channel 1 of TIM module 2**
	P11.2	O0		**General-purpose output**
	GTM_TOUT95	O1		**GTM muxed output**
	—	O2		**Reserved**
	QSPI0_SLSO5	O3		**Master slave select output**
	QSPI1_SLSO5	O4		**Master slave select output**
	MSC0_EN1	O5		**Chip Select**
	GETH_TXD1	O6		**Transmit Data**
	CCU60_COUT63	O7		**T13 PWM channel 63**
	IOM_MON1_6			**Monitor input 1**
	IOM_REF1_0			**Reference input 1**
B10	P11.3	I	RFAST / PU1 / VFLEX / ES	**General-purpose input**
	GTM_TIM3_IN2_2			**Mux input channel 2 of TIM module 3**
	GTM_TIM2_IN2_2			**Mux input channel 2 of TIM module 2**
	MSC0_SDI3			**Upstream assynchronous input signal**
	QSPI1_MRSTB			**Master SPI data input**
	P11.3	O0		**General-purpose output**
	GTM_TOUT96	O1		**GTM muxed output**
	—	O2		**Reserved**
	QSPI1_MRST	O3		**Slave SPI data output**
	IOM_MON2_1			**Monitor input 2**
	IOM_REF2_1			**Reference input 2**
	ERAY0_TXDA	O4		**Transmit Channel A**
	—	O5		**Reserved**
	GETH_TXD0	O6		**Transmit Data**
	CCU60_COUT62	O7		**T12 PWM channel 62**
	IOM_MON1_5			**Monitor input 1**
	IOM_REF1_1			**Reference input 1**

Downloaded by IFXDMZ|par-zengzhe 12/02/2019 11:04:31

Table 2-29 Port 11 Functions (cont'd)

Ball	Symbol	Ctrl.	Buffer Type	Function
D10	P11.4	I	RFAST / PU1 / VFLEX / ES	**General-purpose input**
	GTM_TIM7_IN7_1			**Mux input channel 7 of TIM module 7**
	GTM_TIM4_IN2_5			**Mux input channel 2 of TIM module 4**
	GTM_TIM2_IN2_6			**Mux input channel 2 of TIM module 2**
	GETH_RXCLKB			**Receive Clock MII and RGMII (RGMII can use RXCLKA only)**
	P11.4	O0		**General-purpose output**
	GTM_TOUT121	O1		**GTM muxed output**
	ASCLIN3_ASCLK	O2		**Shift clock output**
	—	O3		**Reserved**
	—	O4		**Reserved**
	CAN13_TXD	O5		**CAN transmit output node 3**
	GETH_TXER	O6		**Transmit Error MII**
	GETH_TXCLK	O7		**Transmit Clock Output for RGMII**
D8	P11.5	I	SLOW / PU1 / VFLEX / ES	**General-purpose input**
	GTM_TIM4_IN3_5			**Mux input channel 3 of TIM module 4**
	GTM_TIM2_IN3_8			**Mux input channel 3 of TIM module 2**
	GETH_TXCLKA			**Transmit Clock Input for MII**
	GETH_GREFCLK			**Gigabit Reference Clock input for RGMII (125 MHz high precission)**
	P11.5	O0		**General-purpose output**
	GTM_TOUT122	O1		**GTM muxed output**
	—	O2		**Reserved**
	—	O3		**Reserved**
	—	O4		**Reserved**
	CAN20_TXD	O5		**CAN transmit output node 0**
	—	O6		**Reserved**
	—	O7		**Reserved**

Downloaded by IFXDMZ|par-zengzhe 12/02/2019 11:04:31

Table 2-29 Port 11 Functions (cont'd)

Ball	Symbol	Ctrl.	Buffer Type	Function
D9	P11.6	I	RFAST / PU1 / VFLEX / ES	**General-purpose input**
	GTM_TIM3_IN3_2			**Mux input channel 3 of TIM module 3**
	GTM_TIM2_IN3_2			**Mux input channel 3 of TIM module 2**
	QSPI1_SCLKB			**Slave SPI clock inputs**
	P11.6	O0		**General-purpose output**
	GTM_TOUT97	O1		**GTM muxed output**
	ERAY0_TXENB	O2		**Transmit Enable Channel B**
	QSPI1_SCLK	O3		**Master SPI clock output**
	ERAY0_TXENA	O4		**Transmit Enable Channel A**
	MSC0_FCLP	O5		**Shift-clock direct part of the differential signal**
	GETH_TXEN	O6		**Transmit Enable MII and RMII**
	GETH_TCTL			**Transmit Control for RGMII**
	CCU60_COUT61	O7		**T12 PWM channel 61**
	IOM_MON1_4			**Monitor input 1**
	IOM_REF1_2			**Reference input 1**
E8	P11.7	I	SLOW / PU1 / VFLEX / ES	**General-purpose input**
	GTM_TIM4_IN4_5			**Mux input channel 4 of TIM module 4**
	GTM_TIM2_IN4_7			**Mux input channel 4 of TIM module 2**
	GETH_RXD3A			**Receive Data 3 MII and RGMII (RGMII can use RXD3A only)**
	CAN11_RXDD			**CAN receive input node 1**
	P11.7	O0		**General-purpose output**
	GTM_TOUT123	O1		**GTM muxed output**
	—	O2		**Reserved**
	—	O3		**Reserved**
	—	O4		**Reserved**
	—	O5		**Reserved**
	—	O6		**Reserved**
	—	O7		**Reserved**

Downloaded by IFXDMZlpar-zengzhe 12/02/2019 11:04:31

Table 2-29 Port 11 Functions (cont'd)

Ball	Symbol	Ctrl.	Buffer Type	Function
E7	P11.8	I	SLOW / PU1 / VFLEX / ES	**General-purpose input**
	GTM_TIM4_IN5_5			**Mux input channel 5 of TIM module 4**
	GTM_TIM2_IN5_8			**Mux input channel 5 of TIM module 2**
	GETH_RXD2A			**Receive Data 2 MII and RGMII (RGMII can use RXD2A only)**
	CAN12_RXDD			**CAN receive input node 2**
	P11.8	O0		**General-purpose output**
	GTM_TOUT124	O1		**GTM muxed output**
	—	O2		**Reserved**
	—	O3		**Reserved**
	—	O4		**Reserved**
	—	O5		**Reserved**
	—	O6		**Reserved**
	—	O7		**Reserved**
A9	P11.9	I	FAST / PU1 / VFLEX / ES	**General-purpose input**
	GTM_TIM3_IN4_2			**Mux input channel 4 of TIM module 3**
	GTM_TIM2_IN4_2			**Mux input channel 4 of TIM module 2**
	QSPI1_MTSRB			**Save SPI data input**
	ERAY0_RXDA1			**Receive Channel A1**
	GETH_RXD1A			**Receive Data 1 MII, RMII and RGMII (RGMII can use RXD1A only)**
	P11.9	O0		**General-purpose output**
	GTM_TOUT98	O1		**GTM muxed output**
	—	O2		**Reserved**
	QSPI1_MTSR	O3		**Master SPI data output**
	—	O4		**Reserved**
	MSC0_SOP	O5		**Data output - direct part of the differential signal**
	—	O6		**Reserved**
	CCU60_COUT60	O7		**T12 PWM channel 60**
	IOM_MON1_3			**Monitor input 1**
	IOM_REF1_3			**Reference input 1**

Downloaded by IFXDMZlpar-zengzhe 12/02/2019 11:04:31

Table 2-29 Port 11 Functions (cont'd)

Ball	Symbol	Ctrl.	Buffer Type	Function
B9	P11.10	I	FAST / PU1 / VFLEX / ES	**General-purpose input**
	GTM_TIM3_IN5_2			**Mux input channel 5 of TIM module 3**
	GTM_TIM2_IN5_2			**Mux input channel 5 of TIM module 2**
	GTM_TIM2_IN0_9			**Mux input channel 0 of TIM module 2**
	CAN03_RXDD			**CAN receive input node 3**
	ERAY0_RXDB1			**Receive Channel B1**
	ASCLIN1_ARXE			**Receive input**
	SCU_E_REQ6_3			**ERU Channel 6 inputs 0 to 5 (0 is the LSB and 5 is the MSB)**
	MSC0_SDI0			**Upstream assynchronous input signal**
	GETH_RXD0A			**Receive Data 0 MII, RMII and RGMII (RGMII can use RXD0A only)**
	QSPI1_SLSIA			**Slave select input**
	P11.10	O0		**General-purpose output**
	GTM_TOUT99	O1		**GTM muxed output**
	—	O2		**Reserved**
	QSPI0_SLSO3	O3		**Master slave select output**
	QSPI1_SLSO3	O4		**Master slave select output**
	—	O5		**Reserved**
	—	O6		**Reserved**
	CCU60_CC62	O7		**T12 PWM channel 62**
	IOM_MON1_0			**Monitor input 1**
	IOM_REF1_4			**Reference input 1**

Downloaded by IFXDMZlpar-zengzhe 12/02/2019 11:04:31

Table 2-29 Port 11 Functions (cont'd)

Ball	Symbol	Ctrl.	Buffer Type	Function
A8	P11.11	I	FAST / PU1 / VFLEX / ES	**General-purpose input**
	GTM_TIM3_IN6_2			**Mux input channel 6 of TIM module 3**
	GTM_TIM3_IN0_14			**Mux input channel 0 of TIM module 3**
	GTM_TIM2_IN6_2			**Mux input channel 6 of TIM module 2**
	GETH_CRSDVA			**Carrier Sense / Data Valid combi-signal for RMII**
	GETH_RXDVA			**Receive Data Valid MII**
	GETH_CRSB			**Carrier Sense MII**
	GETH_RCTLA			**Receive Control for RGMII**
	P11.11	O0		**General-purpose output**
	GTM_TOUT100	O1		**GTM muxed output**
	—	O2		**Reserved**
	QSPI0_SLSO4	O3		**Master slave select output**
	QSPI1_SLSO4	O4		**Master slave select output**
	MSC0_EN0	O5		**Chip Select**
	ERAY0_TXENB	O6		**Transmit Enable Channel B**
	CCU60_CC61	O7		**T12 PWM channel 61**
	IOM_MON1_1			**Monitor input 1**
	IOM_REF1_5			**Reference input 1**

Downloaded by IFXDMZ|par-zengzhe 12/02/2019 11:04:31

Table 2-29 Port 11 Functions (cont'd)

Ball	Symbol	Ctrl.	Buffer Type	Function
B8	P11.12	I	FAST / PU1 / VFLEX / ES	**General-purpose input**
	GTM_TIM3_IN7_2			**Mux input channel 7 of TIM module 3**
	GTM_TIM2_IN7_2			**Mux input channel 7 of TIM module 2**
	GETH_REFCLKA			**Reference Clock input for RMII (50 MHz)**
	GETH_TXCLKB			**Transmit Clock Input for MII**
	GETH_RXCLKA			**Receive Clock MII and RGMII (RGMII can use RXCLKA only)**
	P11.12	O0		**General-purpose output**
	GTM_TOUT101	O1		**GTM muxed output**
	ASCLIN1_ATX	O2		**Transmit output**
	IOM_MON2_13			**Monitor input 2**
	IOM_REF2_13			**Reference input 2**
	GTM_CLK2	O3		**CGM generated clock**
	ERAY0_TXDB	O4		**Transmit Channel B**
	CAN03_TXD	O5		**CAN transmit output node 3**
	IOM_MON2_8			**Monitor input 2**
	IOM_REF2_8			**Reference input 2**
	CCU_EXTCLK1	O6		**CCU external clock**
	CCU60_CC60	O7		**T12 PWM channel 60**
	IOM_MON1_2			**Monitor input 1**
	IOM_REF1_6			**Reference input 1**
E6	P11.13	I	SLOW / PU1 / VFLEX / ES	**General-purpose input**
	GTM_TIM4_IN6_5			**Mux input channel 6 of TIM module 4**
	GTM_TIM2_IN6_7			**Mux input channel 6 of TIM module 2**
	GETH_RXERA			**Receive Error MII**
	I2C1_SDAA			**Serial Data Input**
	CAN13_RXDD			**CAN receive input node 3**
	P11.13	O0		**General-purpose output**
	GTM_TOUT125	O1		**GTM muxed output**
	—	O2		**Reserved**
	—	O3		**Reserved**
	—	O4		**Reserved**
	—	O5		**Reserved**
	I2C1_SDA	O6		**Serial Data Output**
	—	O7		**Reserved**

Downloaded by IFXDMZ|par-zengzhe 12/02/2019 11:04:31

Table 2-29 Port 11 Functions (cont'd)

Ball	Symbol	Ctrl.	Buffer Type	Function
D7	P11.14	I	SLOW / PU1 / VFLEX / ES	**General-purpose input**
	GTM_TIM4_IN7_4			**Mux input channel 7 of TIM module 4**
	GTM_TIM2_IN7_8			**Mux input channel 7 of TIM module 2**
	GETH_CRSDVB			**Carrier Sense / Data Valid combi-signal for RMII**
	GETH_RXDVB			**Receive Data Valid MII**
	GETH_CRSA			**Carrier Sense MII**
	I2C1_SCLA			**Serial Clock Input**
	CAN20_RXDF			**CAN receive input node 0**
	P11.14	O0		**General-purpose output**
	GTM_TOUT126	O1		**GTM muxed output**
	—	O2		**Reserved**
	—	O3		**Reserved**
	—	O4		**Reserved**
	—	O5		**Reserved**
	I2C1_SCL	O6		**Serial Clock Output**
	—	O7		**Reserved**
D6	P11.15	I	SLOW / PU1 / VFLEX / ES	**General-purpose input**
	GTM_TIM4_IN7_5			**Mux input channel 7 of TIM module 4**
	GTM_TIM0_IN7_8			**Mux input channel 0 of TIM module 0**
	GETH_COLA			**Collision MII**
	P11.15	O0		**General-purpose output**
	GTM_TOUT127	O1		**GTM muxed output**
	—	O2		**Reserved**
	—	O3		**Reserved**
	—	O4		**Reserved**
	—	O5		**Reserved**
	—	O6		**Reserved**
	—	O7		**Reserved**

Downloaded by IFXDMZ|par-zengzhe 12/02/2019 11:04:31

Table 2-30 Port 12 Functions

Ball	Symbol	Ctrl.	Buffer Type	Function
E12	P12.0	I	SLOW / PU1 / VFLEX / ES	**General-purpose input**
	GTM_TIM7_IN3_2			**Mux input channel 3 of TIM module 7**
	GTM_TIM4_IN0_5			**Mux input channel 0 of TIM module 4**
	GTM_TIM3_IN0_7			**Mux input channel 0 of TIM module 3**
	CAN00_RXDC			**CAN receive input node 0**
	GETH_RXCLKC			**Receive Clock MII and RGMII (RGMII can use RXCLKA only)**
	GTM_DTMA4_0			**CDTM4_DTM4**
	P12.0	O0		**General-purpose output**
	GTM_TOUT128	O1		**GTM muxed output**
	—	O2		**Reserved**
	—	O3		**Reserved**
	—	O4		**Reserved**
	—	O5		**Reserved**
	GETH_MDC	O6		**MDIO clock**
	—	O7		**Reserved**
E11	P12.1	I	SLOW / PU1 / VFLEX / ES	**General-purpose input**
	GTM_TIM7_IN4_1			**Mux input channel 4 of TIM module 7**
	GTM_TIM4_IN1_6			**Mux input channel 1 of TIM module 4**
	GTM_TIM3_IN1_6			**Mux input channel 1 of TIM module 3**
	GETH_MDIOC			**MDIO Input**
	P12.1	O0		**General-purpose output**
	GTM_TOUT129	O1		**GTM muxed output**
	ASCLIN3_ASLSO	O2		**Slave select signal output**
	—	O3		**Reserved**
	—	O4		**Reserved**
	CAN00_TXD	O5		**CAN transmit output node 0**
	IOM_MON2_5			**Monitor input 2**
	IOM_REF2_5			**Reference input 2**
	—	O6		**Reserved**
	—	O7		**Reserved**
	GETH_MDIO	O		**MDIO Output**

Downloaded by IFXDMZlpar-zengzhe 12/02/2019 11:04:31

Table 2-31 Port 13 Functions

Ball	Symbol	Ctrl.	Buffer Type	Function
B12	P13.0	I	LVDS_TX / FAST / PU1 / VEXT / ES6	**General-purpose input**
	GTM_TIM3_IN5_3			**Mux input channel 5 of TIM module 3**
	GTM_TIM2_IN5_3			**Mux input channel 5 of TIM module 2**
	ASCLIN10_ARXC			**Receive input**
	P13.0	O0		**General-purpose output**
	GTM_TOUT91	O1		**GTM muxed output**
	ASCLIN10_ATX	O2		**Transmit output**
	QSPI2_SCLKN	O3		**Master SPI clock output (LVDS N line)**
	MSC0_EN1	O4		**Chip Select**
	MSC0_FCLN	O5		**Shift-clock inverted part of the differential signal**
	—	O6		**Reserved**
	CAN10_TXD	O7		**CAN transmit output node 0**
A12	P13.1	I	LVDS_TX / FAST / PU1 / VEXT / ES6	**General-purpose input**
	GTM_TIM3_IN6_3			**Mux input channel 6 of TIM module 3**
	GTM_TIM2_IN6_3			**Mux input channel 6 of TIM module 2**
	I2C0_SCLB			**Serial Clock Input**
	CAN10_RXDD			**CAN receive input node 0**
	ASCLIN10_ARXD			**Receive input**
	P13.1	O0		**General-purpose output**
	GTM_TOUT92	O1		**GTM muxed output**
	—	O2		**Reserved**
	QSPI2_SCLKP	O3		**Master SPI clock output (LVDS P line)**
	—	O4		**Reserved**
	MSC0_FCLP	O5		**Shift-clock direct part of the differential signal**
	I2C0_SCL	O6		**Serial Clock Output**
	—	O7		**Reserved**

Downloaded by IFXDMZ|par-zengzhe 12/02/2019 11:04:31

Table 2-31 Port 13 Functions (cont'd)

Ball	Symbol	Ctrl.	Buffer Type	Function
B11	P13.2	I	LVDS_TX / FAST / PU1 / VEXT / ES6	**General-purpose input**
	GTM_TIM3_IN7_3			**Mux input channel 7 of TIM module 3**
	GTM_TIM2_IN7_3			**Mux input channel 7 of TIM module 2**
	GPT120_CAPINA			**Trigger input to capture value of timer T5 into CAPREL register**
	I2C0_SDAB			**Serial Data Input**
	P13.2	O0		**General-purpose output**
	GTM_TOUT93	O1		**GTM muxed output**
	ASCLIN10_ASCLK	O2		**Shift clock output**
	QSPI2_MTSRN	O3		**Master SPI data output (LVDS N line)**
	MSC0_FCLP	O4		**Shift-clock direct part of the differential signal**
	MSC0_SON	O5		**Data output - inverted part of the differential signal**
	I2C0_SDA	O6		**Serial Data Output**
	—	O7		**Reserved**
A11	P13.3	I	LVDS_TX / FAST / PU1 / VEXT / ES6	**General-purpose input**
	GTM_TIM3_IN0_3			**Mux input channel 0 of TIM module 3**
	GTM_TIM2_IN0_3			**Mux input channel 0 of TIM module 2**
	P13.3	O0		**General-purpose output**
	GTM_TOUT94	O1		**GTM muxed output**
	ASCLIN10_ASLSO	O2		**Slave select signal output**
	QSPI2_MTSRP	O3		**Master SPI data output (LVDS P line)**
	—	O4		**Reserved**
	MSC0_SOP	O5		**Data output - direct part of the differential signal**
	—	O6		**Reserved**
	—	O7		**Reserved**

Downloaded by IFXDMZ|par-zengzhe 12/02/2019 11:04:31

Table 2-32 Port 14 Functions

Ball	Symbol	Ctrl.	Buffer Type	Function
B16	P14.0	I	FAST / PU1 / VEXT / ES2	**General-purpose input**
	GTM_TIM1_IN3_5			**Mux input channel 3 of TIM module 1**
	GTM_TIM0_IN3_5			**Mux input channel 3 of TIM module 0**
	SENT_SENT17D			**Receive input channel 17**
	P14.0	O0		**General-purpose output**
	GTM_TOUT80	O1		**GTM muxed output**
	ASCLIN0_ATX	O2		**Transmit output**
	IOM_MON2_12			**Monitor input 2**
	IOM_REF2_12			**Reference input 2**
	ERAY0_TXDA	O3		**Transmit Channel A**
	ERAY0_TXDB	O4		**Transmit Channel B**
	CAN01_TXD	O5		**CAN transmit output node 1**
	IOM_MON2_6			**Monitor input 2**
	IOM_REF2_6			**Reference input 2**
	ASCLIN0_ASCLK	O6		**Shift clock output**
	CCU60_COUT62	O7		**T12 PWM channel 62**
	IOM_MON1_5			**Monitor input 1**
	IOM_REF1_1			**Reference input 1**

Downloaded by IFXDMZ|par-zengzhe 12/02/2019 11:04:31

Table 2-32 Port 14 Functions (cont'd)

Ball	Symbol	Ctrl.	Buffer Type	Function
A15	P14.1	I	FAST / PU1 / VEXT / ES2	**General-purpose input**
	GTM_TIM1_IN4_3			**Mux input channel 4 of TIM module 1**
	GTM_TIM0_IN4_3			**Mux input channel 4 of TIM module 0**
	ERAY0_RXDA3			**Receive Channel A3**
	ASCLIN0_ARXA			**Receive input**
	SENT_SENT18D			**Receive input channel 18**
	ERAY0_RXDB3			**Receive Channel B3**
	CAN01_RXDB			**CAN receive input node 1**
	SCU_E_REQ3_1			**ERU Channel 3 inputs 0 to 5 (0 is the LSB and 5 is the MSB)**
	PMS_PINAWKP			**PINA (P14.1) pin input**
	P14.1	O0		**General-purpose output**
	GTM_TOUT81	O1		**GTM muxed output**
	ASCLIN0_ATX	O2		**Transmit output**
	IOM_MON2_12			**Monitor input 2**
	IOM_REF2_12			**Reference input 2**
	—	O3		**Reserved**
	—	O4		**Reserved**
	—	O5		**Reserved**
	—	O6		**Reserved**
	CCU60_COUT63	O7		**T13 PWM channel 63**
	IOM_MON1_6			**Monitor input 1**
	IOM_REF1_0			**Reference input 1**
E13	P14.2	I	SLOW / PU2 / VEXT / ES	**General-purpose input**
	GTM_TIM1_IN5_3			**Mux input channel 5 of TIM module 1**
	GTM_TIM0_IN5_3			**Mux input channel 5 of TIM module 0**
	SCU_PD_HWCFG2			**Hardware configuration pin 2**
	P14.2	O0		**General-purpose output**
	GTM_TOUT82	O1		**GTM muxed output**
	ASCLIN2_ATX	O2		**Transmit output**
	IOM_MON2_14			**Monitor input 2**
	IOM_REF2_14			**Reference input 2**
	QSPI2_SLSO1	O3		**Master slave select output**
	—	O4		**Reserved**
	—	O5		**Reserved**
	ASCLIN2_ASCLK	O6		**Shift clock output**
	—	O7		**Reserved**

Downloaded by IFXDMZ|par-zengzhe 12/02/2019 11:04:31

Table 2-32 Port 14 Functions (cont'd)

Ball	Symbol	Ctrl.	Buffer Type	Function
B14	P14.3	I	SLOW / PU2 / VEXT / ES	**General-purpose input**
	GTM_TIM1_IN6_3			**Mux input channel 6 of TIM module 1**
	GTM_TIM0_IN6_3			**Mux input channel 6 of TIM module 0**
	SCU_PD_HWCFG3			**Hardware configuration pin 3**
	ASCLIN2_ARXA			**Receive input**
	MSC0_SDI2			**Upstream assynchronous input signal**
	SCU_E_REQ1_0			**ERU Channel 1 inputs 0 to 5 (0 is the LSB and 5 is the MSB)**
	P14.3	O0		**General-purpose output**
	GTM_TOUT83	O1		**GTM muxed output**
	ASCLIN2_ATX	O2		**Transmit output**
	IOM_MON2_14			**Monitor input 2**
	IOM_REF2_14			**Reference input 2**
	QSPI2_SLSO3	O3		**Master slave select output**
	ASCLIN1_ASLSO	O4		**Slave select signal output**
	ASCLIN3_ASLSO	O5		**Slave select signal output**
	—	O6		**Reserved**
	—	O7		**Reserved**
B15	P14.4	I	SLOW / PU2 / VEXT / ES	**General-purpose input**
	GTM_TIM1_IN7_2			**Mux input channel 7 of TIM module 1**
	GTM_TIM0_IN7_2			**Mux input channel 0 of TIM module 0**
	SCU_PD_HWCFG6			**Hardware configuration pin 6**
	GTM_DTMT0_0			**CDTM0_DTM0**
	P14.4	O0		**General-purpose output**
	GTM_TOUT84	O1		**GTM muxed output**
	—	O2		**Reserved**
	—	O3		**Reserved**
	—	O4		**Reserved**
	—	O5		**Reserved**
	GETH_PPS	O6		**Pulse Per Second**
	—	O7		**Reserved**

Downloaded by IFXDMZlpar-zengzhe 12/02/2019 11:04:31

Table 2-32 Port 14 Functions (cont'd)

Ball	Symbol	Ctrl.	Buffer Type	Function
A14	P14.5	I	FAST / PU2 / VEXT / ES	**General-purpose input**
	GTM_TIM1_IN0_4			**Mux input channel 0 of TIM module 1**
	GTM_TIM0_IN0_4			**Mux input channel 0 of TIM module 0**
	SCU_PD_HWCFG1			**Hardware configuration pin 1**
	QSPI5_MRSTB			**Master SPI data input**
	GTM_DTMA2_0			**CDTM2_DTM4**
	P14.5	O0		**General-purpose output**
	GTM_TOUT85	O1		**GTM muxed output**
	—	O2		**Reserved**
	QSPI5_MRST	O3		**Slave SPI data output**
	—	O4		**Reserved**
	—	O5		**Reserved**
	ERAY0_TXDB	O6		**Transmit Channel B**
	ERAY1_TXDB	O7		**Transmit Channel B**
B13	P14.6	I	FAST / PU1 / VEXT / ES	**General-purpose input**
	GTM_TIM1_IN1_4			**Mux input channel 1 of TIM module 1**
	GTM_TIM0_IN1_4			**Mux input channel 1 of TIM module 0**
	QSPI5_MTSRB			**Save SPI data input**
	P14.6	O0		**General-purpose output**
	GTM_TOUT86	O1		**GTM muxed output**
	QSPI5_MTSR	O2		**Master SPI data output**
	QSPI2_SLSO2	O3		**Master slave select output**
	CAN13_TXD	O4		**CAN transmit output node 3**
	—	O5		**Reserved**
	ERAY0_TXENB	O6		**Transmit Enable Channel B**
	ERAY1_TXENB	O7		**Transmit Enable Channel B**

Downloaded by IFXDMZlpar-zengzhe 12/02/2019 11:04:31

Table 2-32 Port 14 Functions (cont'd)

Ball	Symbol	Ctrl.	Buffer Type	Function
D13	P14.7	I	SLOW / PU1 / VEXT / ES	**General-purpose input**
	GTM_TIM4_IN7_10			**Mux input channel 7 of TIM module 4**
	GTM_TIM1_IN0_5			**Mux input channel 0 of TIM module 1**
	GTM_TIM0_IN0_5			**Mux input channel 0 of TIM module 0**
	ERAY0_RXDB0			**Receive Channel B0**
	ERAY1_RXDB0			**Receive Channel B0**
	CAN10_RXDB			**CAN receive input node 0**
	CAN13_RXDA			**CAN receive input node 3**
	ASCLIN9_ARXC			**Receive input**
	P14.7	O0		**General-purpose output**
	GTM_TOUT87	O1		**GTM muxed output**
	ASCLIN0_ARTS	O2		**Ready to send output**
	QSPI2_SLSO4	O3		**Master slave select output**
	ASCLIN9_ATX	O4		**Transmit output**
	—	O5		**Reserved**
	—	O6		**Reserved**
	—	O7		**Reserved**
A13	P14.8	I	SLOW / PU1 / VEXT / ES	**General-purpose input**
	GTM_TIM3_IN2_3			**Mux input channel 2 of TIM module 3**
	GTM_TIM2_IN2_3			**Mux input channel 2 of TIM module 2**
	ERAY0_RXDA0			**Receive Channel A0**
	CAN02_RXDD			**CAN receive input node 2**
	ASCLIN1_ARXD			**Receive input**
	ERAY1_RXDA0			**Receive Channel A0**
	P14.8	O0		**General-purpose output**
	GTM_TOUT88	O1		**GTM muxed output**
	ASCLIN5_ASLSO	O2		**Slave select signal output**
	ASCLIN7_ASLSO	O3		**Slave select signal output**
	—	O4		**Reserved**
	—	O5		**Reserved**
	—	O6		**Reserved**
	—	O7		**Reserved**

Downloaded by IFXDMZ|par-zengzhe 12/02/2019 11:04:31

Table 2-32 Port 14 Functions (cont'd)

Ball	Symbol	Ctrl.	Buffer Type	Function
D12	P14.9	I	LVDS_RX / FAST / PU1 / VEXT / ES	**General-purpose input**
	GTM_TIM3_IN3_3			**Mux input channel 3 of TIM module 3**
	GTM_TIM2_IN3_3			**Mux input channel 3 of TIM module 2**
	ASCLIN0_ACTSA			**Clear to send input**
	QSPI2_MRSTFN			**Master SPI data input (LVDS N line)**
	ASCLIN9_ARXD			**Receive input**
	P14.9	O0		**General-purpose output**
	GTM_TOUT89	O1		**GTM muxed output**
	CAN23_TXD	O2		**CAN transmit output node 3**
	MSC0_EN1	O3		**Chip Select**
	CAN10_TXD	O4		**CAN transmit output node 0**
	ERAY0_TXENB	O5		**Transmit Enable Channel B**
	ERAY0_TXENA	O6		**Transmit Enable Channel A**
	ERAY1_TXENA	O7		**Transmit Enable Channel A**
D11	P14.10	I	LVDS_RX / FAST / PU1 / VEXT / ES	**General-purpose input**
	GTM_TIM3_IN4_3			**Mux input channel 4 of TIM module 3**
	GTM_TIM2_IN4_3			**Mux input channel 4 of TIM module 2**
	CAN23_RXDA			**CAN receive input node 3**
	QSPI2_MRSTFP			**Master SPI data input (LVDS P line)**
	P14.10	O0		**General-purpose output**
	GTM_TOUT90	O1		**GTM muxed output**
	QSPI5_SCLK	O2		**Master SPI clock output**
	MSC0_EN0	O3		**Chip Select**
	ASCLIN1_ATX	O4		**Transmit output**
	IOM_MON2_13			**Monitor input 2**
	IOM_REF2_13			**Reference input 2**
	CAN02_TXD	O5		**CAN transmit output node 2**
	IOM_MON2_7			**Monitor input 2**
	IOM_REF2_7			**Reference input 2**
	ERAY0_TXDA	O6		**Transmit Channel A**
	ERAY1_TXDA	O7		**Transmit Channel A**

Downloaded by IFXDMZlpar-zengzhe 12/02/2019 11:04:31

Table 2-33 Port 15 Functions

Ball	Symbol	Ctrl.	Buffer Type	Function
B20	P15.0	I	FAST / PU1 / VEXT / ES	**General-purpose input**
	GTM_TIM3_IN3_4			**Mux input channel 3 of TIM module 3**
	GTM_TIM2_IN3_4			**Mux input channel 3 of TIM module 2**
	SDMMC0_DAT7_IN			**read data in**
	P15.0	O0		**General-purpose output**
	GTM_TOUT71	O1		**GTM muxed output**
	ASCLIN1_ATX	O2		**Transmit output**
	IOM_MON2_13			**Monitor input 2**
	IOM_REF2_13			**Reference input 2**
	QSPI0_SLSO13	O3		**Master slave select output**
	—	O4		**Reserved**
	CAN02_TXD	O5		**CAN transmit output node 2**
	IOM_MON2_7			**Monitor input 2**
	IOM_REF2_7			**Reference input 2**
	ASCLIN1_ASCLK	O6		**Shift clock output**
	—	O7		**Reserved**
	SDMMC0_DAT7	O		**write data out**
A18	P15.1	I	FAST / PU1 / VEXT / ES	**General-purpose input**
	GTM_TIM3_IN4_4			**Mux input channel 4 of TIM module 3**
	GTM_TIM2_IN4_4			**Mux input channel 4 of TIM module 2**
	CAN02_RXDA			**CAN receive input node 2**
	ASCLIN1_ARXA			**Receive input**
	QSPI2_SLSIB			**Slave select input**
	SCU_E_REQ7_2			**ERU Channel 7 inputs 0 to 5 (0 is the LSB and 5 is the MSB)**
	P15.1	O0		**General-purpose output**
	GTM_TOUT72	O1		**GTM muxed output**
	ASCLIN1_ATX	O2		**Transmit output**
	IOM_MON2_13			**Monitor input 2**
	IOM_REF2_13			**Reference input 2**
	QSPI2_SLSO5	O3		**Master slave select output**
	—	O4		**Reserved**
	—	O5		**Reserved**
	—	O6		**Reserved**
	SDMMC0_CLK	O7		**card clock**

Downloaded by IFXDMZlpar-zengzhe 12/02/2019 11:04:31

Table 2-33 Port 15 Functions (cont'd)

Ball	Symbol	Ctrl.	Buffer Type	Function
C19	P15.2	I	FAST / PU1 / VEXT / ES	**General-purpose input**
	GTM_TIM3_IN5_4			**Mux input channel 5 of TIM module 3**
	GTM_TIM2_IN5_4			**Mux input channel 5 of TIM module 2**
	QSPI2_SLSIA			**Slave select input**
	SENT_SENT10D			**Receive input channel 10**
	QSPI2_MRSTE			**Master SPI data input**
	QSPI2_HSICINA			**Highspeed capture channel**
	P15.2	O0		**General-purpose output**
	GTM_TOUT73	O1		**GTM muxed output**
	ASCLIN0_ATX	O2		**Transmit output**
	IOM_MON2_12			**Monitor input 2**
	IOM_REF2_12			**Reference input 2**
	QSPI2_SLSO0	O3		**Master slave select output**
	—	O4		**Reserved**
	CAN01_TXD	O5		**CAN transmit output node 1**
	IOM_MON2_6			**Monitor input 2**
	IOM_REF2_6			**Reference input 2**
	ASCLIN0_ASCLK	O6		**Shift clock output**
	—	O7		**Reserved**
B17	P15.3	I	FAST / PU1 / VEXT / ES	**General-purpose input**
	GTM_TIM3_IN6_4			**Mux input channel 6 of TIM module 3**
	GTM_TIM2_IN6_4			**Mux input channel 6 of TIM module 2**
	CAN01_RXDA			**CAN receive input node 1**
	ASCLIN0_ARXB			**Receive input**
	QSPI2_SCLKA			**Slave SPI clock inputs**
	QSPI2_HSICINB			**Highspeed capture channel**
	SDMMC0_CMD_IN			**command in**
	P15.3	O0		**General-purpose output**
	GTM_TOUT74	O1		**GTM muxed output**
	ASCLIN0_ATX	O2		**Transmit output**
	IOM_MON2_12			**Monitor input 2**
	IOM_REF2_12			**Reference input 2**
	QSPI2_SCLK	O3		**Master SPI clock output**
	—	O4		**Reserved**
	MSC0_EN1	O5		**Chip Select**
	—	O6		**Reserved**
	—	O7		**Reserved**
	SDMMC0_CMD	O		**command out**

Downloaded by IFXDMZ\par-zengzhe 12/02/2019 11:04:31

Table 2-33 Port 15 Functions (cont'd)

Ball	Symbol	Ctrl.	Buffer Type	Function
A17	P15.4	I	FAST / PU1 / VEXT / ES	**General-purpose input**
	GTM_TIM3_IN7_4			**Mux input channel 7 of TIM module 3**
	GTM_TIM2_IN7_4			**Mux input channel 7 of TIM module 2**
	I2C0_SCLC			**Serial Clock Input**
	QSPI2_MRSTA			**Master SPI data input**
	SCU_E_REQ0_0			**ERU Channel 0 inputs 0 to 5 (0 is the LSB and 5 is the MSB)**
	SENT_SENT11D			**Receive input channel 11**
	P15.4	O0		**General-purpose output**
	GTM_TOUT75	O1		**GTM muxed output**
	ASCLIN1_ATX	O2		**Transmit output**
	IOM_MON2_13			**Monitor input 2**
	IOM_REF2_13			**Reference input 2**
	QSPI2_MRST	O3		**Slave SPI data output**
	IOM_MON2_2			**Monitor input 2**
	IOM_REF2_2			**Reference input 2**
	—	O4		**Reserved**
	—	O5		**Reserved**
	I2C0_SCL	O6		**Serial Clock Output**
	CCU60_CC62	O7		**T12 PWM channel 62**
	IOM_MON1_0			**Monitor input 1**
	IOM_REF1_4			**Reference input 1**

Downloaded by IFXDMZ|par-zengzhe 12/02/2019 11:04:31

Table 2-33 Port 15 Functions (cont'd)

Ball	Symbol	Ctrl.	Buffer Type	Function
E14	P15.5	I	FAST / PU1 / VEXT / ES	**General-purpose input**
	GTM_TIM3_IN0_4			**Mux input channel 0 of TIM module 3**
	GTM_TIM2_IN0_4			**Mux input channel 0 of TIM module 2**
	ASCLIN1_ARXB			**Receive input**
	I2C0_SDAC			**Serial Data Input**
	QSPI2_MTSRA			**Save SPI data input**
	SCU_E_REQ4_3			**ERU Channel 4 inputs 0 to 5 (0 is the LSB and 5 is the MSB)**
	P15.5	O0		**General-purpose output**
	GTM_TOUT76	O1		**GTM muxed output**
	ASCLIN1_ATX	O2		**Transmit output**
	IOM_MON2_13			**Monitor input 2**
	IOM_REF2_13			**Reference input 2**
	QSPI2_MTSR	O3		**Master SPI data output**
	—	O4		**Reserved**
	MSC0_EN0	O5		**Chip Select**
	I2C0_SDA	O6		**Serial Data Output**
	CCU60_CC61	O7		**T12 PWM channel 61**
	IOM_MON1_1			**Monitor input 1**
	IOM_REF1_5			**Reference input 1**
A16	P15.6	I	FAST / PU1 / VEXT / ES	**General-purpose input**
	GTM_TIM2_IN2_14			**Mux input channel 2 of TIM module 2**
	GTM_TIM1_IN0_6			**Mux input channel 0 of TIM module 1**
	GTM_TIM0_IN0_6			**Mux input channel 0 of TIM module 0**
	QSPI2_MTSRB			**Save SPI data input**
	P15.6	O0		**General-purpose output**
	GTM_TOUT77	O1		**GTM muxed output**
	ASCLIN3_ATX	O2		**Transmit output**
	IOM_MON2_15			**Monitor input 2**
	IOM_REF2_15			**Reference input 2**
	QSPI2_MTSR	O3		**Master SPI data output**
	QSPI5_SLSO3	O4		**Master slave select output**
	QSPI2_SCLK	O5		**Master SPI clock output**
	ASCLIN3_ASCLK	O6		**Shift clock output**
	CCU60_CC60	O7		**T12 PWM channel 60**
	IOM_MON1_2			**Monitor input 1**
	IOM_REF1_6			**Reference input 1**

Downloaded by IFXDMZlpar-zengzhe 12/02/2019 11:04:31

Table 2-33 Port 15 Functions (cont'd)

Ball	Symbol	Ctrl.	Buffer Type	Function
D15	P15.7	I	FAST / PU1 / VEXT / ES	**General-purpose input**
	GTM_TIM1_IN1_5			**Mux input channel 1 of TIM module 1**
	GTM_TIM0_IN1_5			**Mux input channel 1 of TIM module 0**
	ASCLIN3_ARXA			**Receive input**
	QSPI2_MRSTB			**Master SPI data input**
	P15.7	O0		**General-purpose output**
	GTM_TOUT78	O1		**GTM muxed output**
	ASCLIN3_ATX	O2		**Transmit output**
	IOM_MON2_15			**Monitor input 2**
	IOM_REF2_15			**Reference input 2**
	QSPI2_MRST	O3		**Slave SPI data output**
	IOM_MON2_2			**Monitor input 2**
	IOM_REF2_2			**Reference input 2**
	—	O4		**Reserved**
	—	O5		**Reserved**
	—	O6		**Reserved**
	CCU60_COUT60	O7		**T12 PWM channel 60**
	IOM_MON1_3			**Monitor input 1**
	IOM_REF1_3			**Reference input 1**
D14	P15.8	I	FAST / PU1 / VEXT / ES	**General-purpose input**
	GTM_TIM1_IN2_5			**Mux input channel 2 of TIM module 1**
	GTM_TIM0_IN2_5			**Mux input channel 2 of TIM module 0**
	QSPI2_SCLKB			**Slave SPI clock inputs**
	SCU_E_REQ5_0			**ERU Channel 5 inputs 0 to 5 (0 is the LSB and 5 is the MSB)**
	P15.8	O0		**General-purpose output**
	GTM_TOUT79	O1		**GTM muxed output**
	—	O2		**Reserved**
	QSPI2_SCLK	O3		**Master SPI clock output**
	—	O4		**Reserved**
	—	O5		**Reserved**
	ASCLIN3_ASCLK	O6		**Shift clock output**
	CCU60_COUT61	O7		**T12 PWM channel 61**
	IOM_MON1_4			**Monitor input 1**
	IOM_REF1_2			**Reference input 1**

Downloaded by IFXDMZlpar-zengzhe 12/02/2019 11:04:31

Table 2-34 Port 20 Functions

Ball	Symbol	Ctrl.	Buffer Type	Function
H20	P20.0	I	FAST / PU1 / VEXT / ES	**General-purpose input**
	GTM_TIM1_IN6_7			**Mux input channel 6 of TIM module 1**
	GTM_TIM1_IN4_9			**Mux input channel 4 of TIM module 1**
	GTM_TIM0_IN6_7			**Mux input channel 6 of TIM module 0**
	CAN03_RXDC			**CAN receive input node 3**
	CCU_PAD_SYSCLK			**Clock input pin for System PLL and Peripheral PLL**
	CAN21_RXDC			**CAN receive input node 1**
	CBS_TGI0			**Trigger input**
	SCU_E_REQ6_0			**ERU Channel 6 inputs 0 to 5 (0 is the LSB and 5 is the MSB)**
	GPT120_T6EUDA			**Count direction control input of core timer T6**
	P20.0	O0		**General-purpose output**
	GTM_TOUT59	O1		**GTM muxed output**
	ASCLIN3_ATX	O2		**Transmit output**
	IOM_MON2_15			**Monitor input 2**
	IOM_REF2_15			**Reference input 2**
	ASCLIN3_ASCLK	O3		**Shift clock output**
	—	O4		**Reserved**
	HSCT0_SYSCLK_OUT	O5		**sys clock output**
	—	O6		**Reserved**
	—	O7		**Reserved**
	CBS_TGO0	O		**Trigger output**
G19	P20.1	I	SLOW / PU1 / VEXT / ES	**General-purpose input**
	GTM_TIM4_IN4_11			**Mux input channel 4 of TIM module 4**
	GTM_TIM3_IN3_5			**Mux input channel 3 of TIM module 3**
	GTM_TIM2_IN3_5			**Mux input channel 3 of TIM module 2**
	CBS_TGI1			**Trigger input**
	GTM_DTMA1_1			**CDTM1_DTM4**
	P20.1	O0		**General-purpose output**
	GTM_TOUT60	O1		**GTM muxed output**
	—	O2		**Reserved**
	—	O3		**Reserved**
	—	O4		**Reserved**
	—	O5		**Reserved**
	—	O6		**Reserved**
	—	O7		**Reserved**
	CBS_TGO1	O		**Trigger output**

Downloaded by IFXDMZlpar-zengzhe 12/02/2019 11:04:31

Table 2-34 Port 20 Functions (cont'd)

Ball	Symbol	Ctrl.	Buffer Type	Function
H19	P20.2	I	S / PU / VEXT	**General-purpose input** This pin is latched at power on reset release to enter test mode.
	$\overline{\text{TESTMODE}}$			**Testmode Enable Input**
G20	P20.3	I	SLOW / PU1 / VEXT / ES	**General-purpose input**
	GTM_TIM4_IN5_11			**Mux input channel 5 of TIM module 4**
	GTM_TIM3_IN4_5			**Mux input channel 4 of TIM module 3**
	GTM_TIM2_IN4_5			**Mux input channel 4 of TIM module 2**
	ASCLIN3_ARXC			**Receive input**
	GPT120_T6INA			**Trigger/gate input of core timer T6**
	P20.3	O0		**General-purpose output**
	GTM_TOUT61	O1		**GTM muxed output**
	ASCLIN3_ATX	O2		**Transmit output**
	IOM_MON2_15			**Monitor input 2**
	IOM_REF2_15			**Reference input 2**
	QSPI0_SLSO9	O3		**Master slave select output**
	QSPI2_SLSO9	O4		**Master slave select output**
	CAN03_TXD	O5		**CAN transmit output node 3**
	IOM_MON2_8			**Monitor input 2**
	IOM_REF2_8			**Reference input 2**
	CAN21_TXD	O6		**CAN transmit output node 1**
	—	O7		**Reserved**
F17	P20.6	I	SLOW / PU1 / VEXT / ES	**General-purpose input**
	GTM_TIM6_IN0_1			**Mux input channel 0 of TIM module 6**
	GTM_TIM3_IN6_5			**Mux input channel 6 of TIM module 3**
	GTM_TIM2_IN6_5			**Mux input channel 6 of TIM module 2**
	CAN12_RXDA			**CAN receive input node 2**
	ASCLIN9_ARXE			**Receive input**
	P20.6	O0		**General-purpose output**
	GTM_TOUT62	O1		**GTM muxed output**
	ASCLIN1_ARTS	O2		**Ready to send output**
	QSPI0_SLSO8	O3		**Master slave select output**
	QSPI2_SLSO8	O4		**Master slave select output**
	—	O5		**Reserved**
	—	O6		**Reserved**
	—	O7		**Reserved**

Downloaded by IFXDMZ|par-zengzhe 12/02/2019 11:04:31

Table 2-34 Port 20 Functions (cont'd)

Ball	Symbol	Ctrl.	Buffer Type	Function
F19	P20.7	I	FAST / PU1 / VEXT / ES	**General-purpose input**
	GTM_TIM3_IN7_5			**Mux input channel 7 of TIM module 3**
	GTM_TIM2_IN7_5			**Mux input channel 7 of TIM module 2**
	GTM_TIM1_IN5_8			**Mux input channel 5 of TIM module 1**
	GTM_TIM6_IN1_1			**Mux input channel 1 of TIM module 6**
	CAN00_RXDB			**CAN receive input node 0**
	ASCLIN1_ACTSA			**Clear to send input**
	ASCLIN9_ARXF			**Receive input**
	SDMMC0_DAT0_IN			**read data in**
	P20.7	O0		**General-purpose output**
	GTM_TOUT63	O1		**GTM muxed output**
	ASCLIN9_ATX	O2		**Transmit output**
	—	O3		**Reserved**
	—	O4		**Reserved**
	CAN12_TXD	O5		**CAN transmit output node 2**
	—	O6		**Reserved**
	CCU61_COUT63	O7		**T13 PWM channel 63**
	IOM_MON1_7			**Monitor input 1**
	IOM_REF1_7			**Reference input 1**
	SDMMC0_DAT0	O		**write data out**
F20	P20.8	I	FAST / PU1 / VEXT / ES	**General-purpose input**
	GTM_TIM6_IN2_1			**Mux input channel 2 of TIM module 6**
	GTM_TIM1_IN7_3			**Mux input channel 7 of TIM module 1**
	GTM_TIM0_IN7_3			**Mux input channel 0 of TIM module 0**
	SDMMC0_DAT1_IN			**read data in**
	P20.8	O0		**General-purpose output**
	GTM_TOUT64	O1		**GTM muxed output**
	ASCLIN1_ASLSO	O2		**Slave select signal output**
	QSPI0_SLSO0	O3		**Master slave select output**
	QSPI1_SLSO0	O4		**Master slave select output**
	CAN00_TXD	O5		**CAN transmit output node 0**
	IOM_MON2_5			**Monitor input 2**
	IOM_REF2_5			**Reference input 2**
	—	O6		**Reserved**
	CCU61_CC60	O7		**T12 PWM channel 60**
	IOM_MON1_8			**Monitor input 1**
	IOM_REF1_13			**Reference input 1**
	SDMMC0_DAT1	O		**write data out**

Downloaded by IFXDMZ|par-zengzhe 12/02/2019 11:04:31

Table 2-34 Port 20 Functions (cont'd)

Ball	Symbol	Ctrl.	Buffer Type	Function
E17	P20.9	I	FAST / PU1 / VEXT / ES	**General-purpose input**
	GTM_TIM6_IN3_1			**Mux input channel 3 of TIM module 6**
	GTM_TIM3_IN5_5			**Mux input channel 5 of TIM module 3**
	GTM_TIM2_IN5_5			**Mux input channel 5 of TIM module 2**
	CAN03_RXDE			**CAN receive input node 3**
	ASCLIN1_ARXC			**Receive input**
	QSPI0_SLSIB			**Slave select input**
	SCU_E_REQ7_0			**ERU Channel 7 inputs 0 to 5 (0 is the LSB and 5 is the MSB)**
	P20.9	O0		**General-purpose output**
	GTM_TOUT65	O1		**GTM muxed output**
	—	O2		**Reserved**
	QSPI0_SLSO1	O3		**Master slave select output**
	QSPI1_SLSO1	O4		**Master slave select output**
	—	O5		**Reserved**
	—	O6		**Reserved**
	CCU61_CC61	O7		**T12 PWM channel 61**
	IOM_MON1_9			**Monitor input 1**
	IOM_REF1_12			**Reference input 1**
E19	P20.10	I	FAST / PU1 / VEXT / ES	**General-purpose input**
	GTM_TIM3_IN6_6			**Mux input channel 6 of TIM module 3**
	GTM_TIM2_IN6_6			**Mux input channel 6 of TIM module 2**
	SDMMC0_DAT2_IN			**read data in**
	P20.10	O0		**General-purpose output**
	GTM_TOUT66	O1		**GTM muxed output**
	ASCLIN1_ATX	O2		**Transmit output**
	IOM_MON2_13			**Monitor input 2**
	IOM_REF2_13			**Reference input 2**
	QSPI0_SLSO6	O3		**Master slave select output**
	QSPI2_SLSO7	O4		**Master slave select output**
	CAN03_TXD	O5		**CAN transmit output node 3**
	IOM_MON2_8			**Monitor input 2**
	IOM_REF2_8			**Reference input 2**
	ASCLIN1_ASCLK	O6		**Shift clock output**
	CCU61_CC62	O7		**T12 PWM channel 62**
	IOM_MON1_10			**Monitor input 1**
	IOM_REF1_11			**Reference input 1**
	SDMMC0_DAT2	O		**write data out**

Downloaded by IFXDMZ|par-zengzhe 12/02/2019 11:04:31

Table 2-34 Port 20 Functions (cont'd)

Ball	Symbol	Ctrl.	Buffer Type	Function
E20	P20.11	I	FAST / PU1 / VEXT / ES	**General-purpose input**
	GTM_TIM3_IN7_6			**Mux input channel 7 of TIM module 3**
	GTM_TIM2_IN7_6			**Mux input channel 7 of TIM module 2**
	QSPI0_SCLKA			**Slave SPI clock inputs**
	SDMMC0_DAT3_IN			**read data in**
	P20.11	O0		**General-purpose output**
	GTM_TOUT67	O1		**GTM muxed output**
	—	O2		**Reserved**
	QSPI0_SCLK	O3		**Master SPI clock output**
	—	O4		**Reserved**
	—	O5		**Reserved**
	—	O6		**Reserved**
	CCU61_COUT60	O7		**T12 PWM channel 60**
	IOM_MON1_11			**Monitor input 1**
	IOM_REF1_10			**Reference input 1**
	SDMMC0_DAT3	O		**write data out**
D19	P20.12	I	FAST / PU1 / VEXT / ES	**General-purpose input**
	GTM_TIM3_IN0_5			**Mux input channel 0 of TIM module 3**
	GTM_TIM2_IN0_5			**Mux input channel 0 of TIM module 2**
	QSPI0_MRSTA			**Master SPI data input**
	SDMMC0_DAT4_IN			**read data in**
	IOM_PIN_13			**GPIO pad input to FPC**
	P20.12	O0		**General-purpose output**
	GTM_TOUT68	O1		**GTM muxed output**
	IOM_MON0_13			**Monitor input 0**
	—	O2		**Reserved**
	QSPI0_MRST	O3		**Slave SPI data output**
	IOM_MON2_0			**Monitor input 2**
	IOM_REF2_0			**Reference input 2**
	QSPI0_MTSR	O4		**Master SPI data output**
	—	O5		**Reserved**
	—	O6		**Reserved**
	CCU61_COUT61	O7		**T12 PWM channel 61**
	IOM_MON1_12			**Monitor input 1**
	IOM_REF1_9			**Reference input 1**
	SDMMC0_DAT4	O		**write data out**

Downloaded by IFXDMZlpar-zengzhe 12/02/2019 11:04:31

Table 2-34 Port 20 Functions (cont'd)

Ball	Symbol	Ctrl.	Buffer Type	Function
D20	P20.13	I	FAST / PU1 / VEXT / ES	**General-purpose input**
	GTM_TIM3_IN1_4			**Mux input channel 1 of TIM module 3**
	GTM_TIM2_IN1_4			**Mux input channel 1 of TIM module 2**
	QSPI0_SLSIA			**Slave select input**
	SDMMC0_DAT5_IN			**read data in**
	IOM_PIN_14			**GPIO pad input to FPC**
	P20.13	O0		**General-purpose output**
	GTM_TOUT69	O1		**GTM muxed output**
	IOM_MON0_14			**Monitor input 0**
	—	O2		**Reserved**
	QSPI0_SLSO2	O3		**Master slave select output**
	QSPI1_SLSO2	O4		**Master slave select output**
	QSPI0_SCLK	O5		**Master SPI clock output**
	—	O6		**Reserved**
	CCU61_COUT62	O7		**T12 PWM channel 62**
	IOM_MON1_13			**Monitor input 1**
	IOM_REF1_8			**Reference input 1**
	SDMMC0_DAT5	O		**write data out**
C20	P20.14	I	FAST / PU1 / VEXT / ES	**General-purpose input**
	GTM_TIM3_IN2_4			**Mux input channel 2 of TIM module 3**
	GTM_TIM2_IN2_4			**Mux input channel 2 of TIM module 2**
	QSPI0_MTSRA			**Save SPI data input**
	SDMMC0_DAT6_IN			**read data in**
	IOM_PIN_15			**GPIO pad input to FPC**
	P20.14	O0		**General-purpose output**
	GTM_TOUT70	O1		**GTM muxed output**
	IOM_MON0_15			**Monitor input 0**
	—	O2		**Reserved**
	QSPI0_MTSR	O3		**Master SPI data output**
	—	O4		**Reserved**
	—	O5		**Reserved**
	—	O6		**Reserved**
	—	O7		**Reserved**
	SDMMC0_DAT6	O		**write data out**

Downloaded by IFXDMZ|par-zengzhe 12/02/2019 11:04:31

Table 2-35 Port 21 Functions

Ball	Symbol	Ctrl.	Buffer Type	Function
K17	P21.0	I	LVDS_RX / FAST / PU1 / VEXT / ES	**General-purpose input**
	GTM_TIM4_IN0_11			**Mux input channel 0 of TIM module 4**
	GTM_TIM3_IN4_6			**Mux input channel 4 of TIM module 3**
	GTM_TIM2_IN4_6			**Mux input channel 4 of TIM module 2**
	QSPI4_MRSTDN			**Master SPI data input (LVDS N line)**
	DMU_FDEST			
	ASCLIN11_ARXC			**Receive input**
	HSCT1_RXDN			**Rx data**
	P21.0	O0		**General-purpose output**
	GTM_TOUT51	O1		**GTM muxed output**
	ASCLIN11_ATX	O2		**Transmit output**
	—	O3		**Reserved**
	—	O4		**Reserved**
	—	O5		**Reserved**
	—	O6		**Reserved**
	—	O7		**Reserved**
	HSM_HSM1	O		**Pin Output Value**
J17	P21.1	I	LVDS_RX / FAST / PU1 / VEXT / ES	**General-purpose input**
	GTM_TIM4_IN1_13			**Mux input channel 1 of TIM module 4**
	GTM_TIM3_IN5_6			**Mux input channel 5 of TIM module 3**
	GTM_TIM2_IN5_6			**Mux input channel 5 of TIM module 2**
	QSPI4_MRSTDP			**Master SPI data input (LVDS P line)**
	ASCLIN11_ARXD			**Receive input**
	HSCT1_RXDP			**Rx data**
	GTM_DTMA4_1			**CDTM4_DTM4**
	P21.1	O0		**General-purpose output**
	GTM_TOUT52	O1		**GTM muxed output**
	—	O2		**Reserved**
	—	O3		**Reserved**
	—	O4		**Reserved**
	—	O5		**Reserved**
	—	O6		**Reserved**
	—	O7		**Reserved**
	HSM_HSM2	O		**Pin Output Value**

Downloaded by IFXDMZ\par-zengzhe 12/02/2019 11:04:31

Table 2-35 Port 21 Functions (cont'd)

Ball	Symbol	Ctrl.	Buffer Type	Function
K19	P21.2	I	LVDS_RX / FAST / PU1 / VEXT / ES	**General-purpose input**
	GTM_TIM5_IN4_11			**Mux input channel 4 of TIM module 5**
	GTM_TIM1_IN0_7			**Mux input channel 0 of TIM module 1**
	GTM_TIM0_IN0_7			**Mux input channel 0 of TIM module 0**
	QSPI2_MRSTCN			**Master SPI data input (LVDS N line)**
	SCU_EMGSTOP_PORT_B			**Emergency stop Port Pin B input request**
	ASCLIN3_ARXGN			**Differential Receive input (low active)**
	HSCT0_RXDN			**Rx data**
	QSPI4_MRSTCN			**Master SPI data input (LVDS N line)**
	ASCLIN11_ARXE			**Receive input**
	GTM_DTMA1_0			**CDTM1_DTM4**
	P21.2	O0		**General-purpose output**
	GTM_TOUT53	O1		**GTM muxed output**
	ASCLIN3_ASLSO	O2		**Slave select signal output**
	—	O3		**Reserved**
	—	O4		**Reserved**
	GETH_MDC	O5		**MDIO clock**
	—	O6		**Reserved**
	—	O7		**Reserved**
J19	P21.3	I	LVDS_RX / FAST / PU1 / VEXT / ES	**General-purpose input**
	GTM_TIM5_IN5_12			**Mux input channel 5 of TIM module 5**
	GTM_TIM1_IN1_6			**Mux input channel 1 of TIM module 1**
	GTM_TIM0_IN1_6			**Mux input channel 1 of TIM module 0**
	QSPI2_MRSTCP			**Master SPI data input (LVDS P line)**
	ASCLIN3_ARXGP			**Differential Receive input (high active)**
	GETH_MDIOD			**MDIO Input**
	HSCT0_RXDP			**Rx data**
	QSPI4_MRSTCP			**Master SPI data input (LVDS P line)**
	P21.3	O0		**General-purpose output**
	GTM_TOUT54	O1		**GTM muxed output**
	ASCLIN11_ASCLK	O2		**Shift clock output**
	—	O3		**Reserved**
	—	O4		**Reserved**
	—	O5		**Reserved**
	—	O6		**Reserved**
	—	O7		**Reserved**
	GETH_MDIO	O		**MDIO Output**

Downloaded by IFXDMZ|par-zengzhe 12/02/2019 11:04:31

Table 2-35 Port 21 Functions (cont'd)

Ball	Symbol	Ctrl.	Buffer Type	Function
K20	P21.4	I	LVDS_TX / FAST / PU1 / VEXT / ES6	**General-purpose input**
	GTM_TIM5_IN6_12			**Mux input channel 6 of TIM module 5**
	GTM_TIM1_IN2_6			**Mux input channel 2 of TIM module 1**
	GTM_TIM0_IN2_6			**Mux input channel 2 of TIM module 0**
	P21.4	O0		**General-purpose output**
	GTM_TOUT55	O1		**GTM muxed output**
	ASCLIN11_ASLSO	O2		**Slave select signal output**
	—	O3		**Reserved**
	—	O4		**Reserved**
	—	O5		**Reserved**
	—	O6		**Reserved**
	—	O7		**Reserved**
	HSCT0_TXDN	O		**Tx data**
J20	P21.5	I	LVDS_TX / FAST / PU1 / VEXT / ES6	**General-purpose input**
	GTM_TIM5_IN7_11			**Mux input channel 7 of TIM module 5**
	GTM_TIM1_IN3_6			**Mux input channel 3 of TIM module 1**
	GTM_TIM0_IN3_6			**Mux input channel 3 of TIM module 0**
	ASCLIN11_ARXF			**Receive input**
	P21.5	O0		**General-purpose output**
	GTM_TOUT56	O1		**GTM muxed output**
	ASCLIN3_ASCLK	O2		**Shift clock output**
	ASCLIN11_ATX	O3		**Transmit output**
	—	O4		**Reserved**
	—	O5		**Reserved**
	—	O6		**Reserved**
	—	O7		**Reserved**
	HSCT0_TXDP	O		**Tx data**

Downloaded by IFXDMZ|par-zengzhe 12/02/2019 11:04:31

Table 2-35 Port 21 Functions (cont'd)

Ball	Symbol	Ctrl.	Buffer Type	Function
H17	P21.6/TDI	I	FAST / PD / PU2 / VEXT / ES3	**General-purpose input** PD during Reset and in DAP/DAPE or JTAG mode. After Reset release and when not in DAP/DAPE or JTAG mode: PU. In Standby mode: HighZ.
	GTM_TIM4_IN2_12			**Mux input channel 2 of TIM module 4**
	GTM_TIM1_IN4_8			**Mux input channel 4 of TIM module 1**
	GTM_TIM0_IN4_8			**Mux input channel 4 of TIM module 0**
	GPT120_T5EUDA			**Count direction control input of timer T5**
	ASCLIN3_ARXF			**Receive input**
	CBS_TGI2			**Trigger input**
	TDI			**JTAG Module Data Input**
	P21.6	O0		**General-purpose output**
	GTM_TOUT57	O1		**GTM muxed output**
	ASCLIN3_ASLSO	O2		**Slave select signal output**
	—	O3		**Reserved**
	—	O4		**Reserved**
	—	O5		**Reserved**
	—	O6		**Reserved**
	GPT120_T3OUT	O7		**External output for overflow/underflow detection of core timer T3**
	CBS_TGO2	O		**Trigger output**
	DAP3	I/O		**DAP: DAP3 Data I/O**
	DAPE1	I/O		**DAPE: DAPE1 Data I/O**

Downloaded by IFXDMZlpar-zengzhe 12/02/2019 11:04:31

Table 2-35 Port 21 Functions (cont'd)

Ball	Symbol	Ctrl.	Buffer Type	Function
H16	P21.7/TDO	I	FAST / PU2 / VEXT / ES4	**General-purpose input**
	GTM_TIM4_IN3_12			**Mux input channel 3 of TIM module 4**
	GTM_TIM1_IN5_7			**Mux input channel 5 of TIM module 1**
	GTM_TIM0_IN5_7			**Mux input channel 5 of TIM module 0**
	GPT120_T5INA			**Trigger/gate input of timer T5**
	CBS_TGI3			**Trigger input**
	GETH_RXERB			**Receive Error MII**
	P21.7	O0		**General-purpose output**
	GTM_TOUT58	O1		**GTM muxed output**
	ASCLIN3_ATX	O2		**Transmit output**
	IOM_MON2_15			**Monitor input 2**
	IOM_REF2_15			**Reference input 2**
	ASCLIN3_ASCLK	O3		**Shift clock output**
	—	O4		**Reserved**
	—	O5		**Reserved**
	—	O6		**Reserved**
	GPT120_T6OUT	O7		**External output for overflow/underflow detection of core timer T6**
	CBS_TGO3	O		**Trigger output**
	DAP2	I/O		**DAP: DAP2 Data I/O**
	DAPE2	I/O		**DAPE: DAPE2 Data I/O**
	TDO	O		**JTAG Module Data Output**

Downloaded by IFXDMZ|par-zengzhe 12/02/2019 11:04:31

Table 2-36 Port 22 Functions

Ball	Symbol	Ctrl.	Buffer Type	Function
P20	P22.0	I	LVDS_TX / FAST / PU1 / VEXT / ES6	General-purpose input
	GTM_TIM7_IN3_1			Mux input channel 3 of TIM module 7
	GTM_TIM1_IN1_7			Mux input channel 1 of TIM module 1
	GTM_TIM0_IN1_7			Mux input channel 1 of TIM module 0
	QSPI4_MTSRB			Save SPI data input
	ASCLIN6_ARXE			Receive input
	P22.0	O0		General-purpose output
	GTM_TOUT47	O1		GTM muxed output
	ASCLIN3_ATXN	O2		Differential Transmit output (low active)
	QSPI4_MTSR	O3		Master SPI data output
	QSPI4_SCLKN	O4		Master SPI clock output (LVDS N line)
	MSC1_FCLN	O5		Shift-clock inverted part of the differential signal
	—	O6		Reserved
	ASCLIN6_ATX	O7		Transmit output
P19	P22.1	I	LVDS_TX / FAST / PU1 / VEXT / ES6	General-purpose input
	GTM_TIM7_IN2_1			Mux input channel 2 of TIM module 7
	GTM_TIM1_IN0_8			Mux input channel 0 of TIM module 1
	GTM_TIM0_IN0_8			Mux input channel 0 of TIM module 0
	QSPI4_MRSTB			Master SPI data input
	ASCLIN7_ARXE			Receive input
	P22.1	O0		General-purpose output
	GTM_TOUT48	O1		GTM muxed output
	ASCLIN3_ATXP	O2		Differential Transmit output (high active)
	QSPI4_MRST	O3		Slave SPI data output
	IOM_MON2_4			Monitor input 2
	IOM_REF2_4			Reference input 2
	QSPI4_SCLKP	O4		Master SPI clock output (LVDS P line)
	MSC1_FCLP	O5		Shift-clock direct part of the differential signal
	—	O6		Reserved
	ASCLIN7_ATX	O7		Transmit output

Downloaded by IFXDMZ|par-zengzhe 12/02/2019 11:04:31

Table 2-36 Port 22 Functions (cont'd)

Ball	Symbol	Ctrl.	Buffer Type	Function
R20	P22.2	I	LVDS_TX / FAST / PU1 / VEXT / ES6	**General-purpose input**
	GTM_TIM7_IN1_1			**Mux input channel 1 of TIM module 7**
	GTM_TIM1_IN3_7			**Mux input channel 3 of TIM module 1**
	GTM_TIM0_IN3_7			**Mux input channel 3 of TIM module 0**
	QSPI4_SLSIB			**Slave select input**
	P22.2	O0		**General-purpose output**
	GTM_TOUT49	O1		**GTM muxed output**
	ASCLIN5_ATX	O2		**Transmit output**
	QSPI4_SLSO3	O3		**Master slave select output**
	QSPI4_MTSRN	O4		**Master SPI data output (LVDS N line)**
	MSC1_SON	O5		**Data output - inverted part of the differential signal**
	—	O6		**Reserved**
	—	O7		**Reserved**
	HSCT1_TXDN	O		**Tx data**
R19	P22.3	I	LVDS_TX / FAST / PU1 / VEXT / ES6	**General-purpose input**
	GTM_TIM7_IN0_1			**Mux input channel 0 of TIM module 7**
	GTM_TIM1_IN4_4			**Mux input channel 4 of TIM module 1**
	GTM_TIM0_IN4_4			**Mux input channel 4 of TIM module 0**
	QSPI4_SCLKB			**Slave SPI clock inputs**
	ASCLIN5_ARXC			**Receive input**
	P22.3	O0		**General-purpose output**
	GTM_TOUT50	O1		**GTM muxed output**
	—	O2		**Reserved**
	QSPI4_SCLK	O3		**Master SPI clock output**
	QSPI4_MTSRP	O4		**Master SPI data output (LVDS P line)**
	MSC1_SOP	O5		**Data output - direct part of the differential signal**
	—	O6		**Reserved**
	HSPDM_MUTE	O7		**Mute output to tx**
	HSCT1_TXDP	O		**Tx data**

Downloaded by IFXDMZ|par-zengzhe 12/02/2019 11:04:31

Table 2-36 Port 22 Functions (cont'd)

Ball	Symbol	Ctrl.	Buffer Type	Function
P16	P22.4	I	FAST / PU1 / VEXT / ES	**General-purpose input**
	GTM_TIM3_IN0_8			**Mux input channel 0 of TIM module 3**
	ASCLIN7_ARXF			**Receive input**
	GTM_DTMA3_0			**CDTM3_DTM4**
	P22.4	O0		**General-purpose output**
	GTM_TOUT130	O1		**GTM muxed output**
	ASCLIN4_ASLSO	O2		**Slave select signal output**
	—	O3		**Reserved**
	QSPI0_SLSO12	O4		**Master slave select output**
	—	O5		**Reserved**
	CAN13_TXD	O6		**CAN transmit output node 3**
	HSPDM_BS0_OUT	O7		**Bit stream 0 output**
P17	P22.5	I	FAST / PU1 / VEXT / ES	**General-purpose input**
	GTM_TIM3_IN1_7			**Mux input channel 1 of TIM module 3**
	QSPI0_MTSRC			**Save SPI data input**
	CAN13_RXDC			**CAN receive input node 3**
	P22.5	O0		**General-purpose output**
	GTM_TOUT131	O1		**GTM muxed output**
	ASCLIN4_ATX	O2		**Transmit output**
	—	O3		**Reserved**
	QSPI0_MTSR	O4		**Master SPI data output**
	—	O5		**Reserved**
	—	O6		**Reserved**
	HSPDM_BS1_OUT	O7		**Bit stream 1 output**

Downloaded by IFXDMZ|par-zengzhe 12/02/2019 11:04:31

Table 2-36 Port 22 Functions (cont'd)

Ball	Symbol	Ctrl.	Buffer Type	Function
N16	P22.6	I	SLOW / PU1 / VEXT / ES	**General-purpose input**
	GTM_TIM3_IN2_6			**Mux input channel 2 of TIM module 3**
	GTM_TIM2_IN6_14			**Mux input channel 6 of TIM module 2**
	QSPI0_MRSTC			**Master SPI data input**
	ASCLIN4_ARXC			**Receive input**
	P22.6	O0		**General-purpose output**
	GTM_TOUT132	O1		**GTM muxed output**
	—	O2		**Reserved**
	—	O3		**Reserved**
	QSPI0_MRST	O4		**Slave SPI data output**
	IOM_MON2_0			**Monitor input 2**
	IOM_REF2_0			**Reference input 2**
	CAN21_TXD	O5		**CAN transmit output node 1**
	—	O6		**Reserved**
	—	O7		**Reserved**
N17	P22.7	I	SLOW / PU1 / VEXT / ES	**General-purpose input**
	GTM_TIM3_IN3_7			**Mux input channel 3 of TIM module 3**
	QSPI0_SCLKC			**Slave SPI clock inputs**
	CAN21_RXDF			**CAN receive input node 1**
	P22.7	O0		**General-purpose output**
	GTM_TOUT133	O1		**GTM muxed output**
	ASCLIN4_ASCLK	O2		**Shift clock output**
	—	O3		**Reserved**
	QSPI0_SCLK	O4		**Master SPI clock output**
	—	O5		**Reserved**
	—	O6		**Reserved**
	—	O7		**Reserved**

Downloaded by IFXDMZlpar-zengzhe 12/02/2019 11:04:31

Table 2-36 Port 22 Functions (cont'd)

Ball	Symbol	Ctrl.	Buffer Type	Function
M16	P22.8	I	SLOW / PU1 / VEXT / ES	**General-purpose input**
	GTM_TIM5_IN0_4			**Mux input channel 0 of TIM module 5**
	GTM_TIM3_IN4_7			**Mux input channel 4 of TIM module 3**
	QSPI0_SCLKB			**Slave SPI clock inputs**
	P22.8	O0		**General-purpose output**
	GTM_TOUT134	O1		**GTM muxed output**
	ASCLIN5_ASCLK	O2		**Shift clock output**
	—	O3		**Reserved**
	QSPI0_SCLK	O4		**Master SPI clock output**
	CAN22_TXD	O5		**CAN transmit output node 2**
	—	O6		**Reserved**
	—	O7		**Reserved**
M17	P22.9	I	SLOW / PU1 / VEXT / ES	**General-purpose input**
	GTM_TIM5_IN1_10			**Mux input channel 1 of TIM module 5**
	GTM_TIM3_IN5_7			**Mux input channel 5 of TIM module 3**
	QSPI0_MRSTB			**Master SPI data input**
	ASCLIN4_ARXD			**Receive input**
	CAN22_RXDE			**CAN receive input node 2**
	GTM_DTMA3_1			**CDTM3_DTM4**
	P22.9	O0		**General-purpose output**
	GTM_TOUT135	O1		**GTM muxed output**
	—	O2		**Reserved**
	—	O3		**Reserved**
	QSPI0_MRST	O4		**Slave SPI data output**
	IOM_MON2_0			**Monitor input 2**
	IOM_REF2_0			**Reference input 2**
	—	O5		**Reserved**
	—	O6		**Reserved**
	—	O7		**Reserved**

Downloaded by IFXDMZ|par-zengzhe 12/02/2019 11:04:31

Table 2-36 Port 22 Functions (cont'd)

Ball	Symbol	Ctrl.	Buffer Type	Function
L16	P22.10	I	SLOW / PU1 / VEXT / ES	**General-purpose input**
	GTM_TIM5_IN2_8			**Mux input channel 2 of TIM module 5**
	GTM_TIM3_IN6_7			**Mux input channel 6 of TIM module 3**
	QSPI0_MTSRB			**Save SPI data input**
	P22.10	O0		**General-purpose output**
	GTM_TOUT136	O1		**GTM muxed output**
	ASCLIN4_ATX	O2		**Transmit output**
	—	O3		**Reserved**
	QSPI0_MTSR	O4		**Master SPI data output**
	CAN23_TXD	O5		**CAN transmit output node 3**
	—	O6		**Reserved**
	—	O7		**Reserved**
L17	P22.11	I	SLOW / PU1 / VEXT / ES	**General-purpose input**
	GTM_TIM5_IN3_10			**Mux input channel 3 of TIM module 5**
	GTM_TIM3_IN7_7			**Mux input channel 7 of TIM module 3**
	CAN23_RXDE			**CAN receive input node 3**
	P22.11	O0		**General-purpose output**
	GTM_TOUT137	O1		**GTM muxed output**
	ASCLIN4_ASLSO	O2		**Slave select signal output**
	—	O3		**Reserved**
	QSPI0_SLSO10	O4		**Master slave select output**
	—	O5		**Reserved**
	—	O6		**Reserved**
	—	O7		**Reserved**

Downloaded by IFXDMZ|par-zengzhe 12/02/2019 11:04:31

Table 2-37 Port 23 Functions

Ball	Symbol	Ctrl.	Buffer Type	Function
V20	P23.0	I	SLOW / PU1 / VEXT / ES	**General-purpose input**
	GTM_TIM6_IN7_1			**Mux input channel 7 of TIM module 6**
	GTM_TIM1_IN5_4			**Mux input channel 5 of TIM module 1**
	GTM_TIM0_IN5_4			**Mux input channel 5 of TIM module 0**
	CAN10_RXDC			**CAN receive input node 0**
	P23.0	O0		**General-purpose output**
	GTM_TOUT41	O1		**GTM muxed output**
	—	O2		**Reserved**
	—	O3		**Reserved**
	—	O4		**Reserved**
	—	O5		**Reserved**
	—	O6		**Reserved**
	—	O7		**Reserved**
U19	P23.1	I	FAST / PU1 / VEXT / ES	**General-purpose input**
	GTM_TIM6_IN6_1			**Mux input channel 6 of TIM module 6**
	GTM_TIM1_IN6_4			**Mux input channel 6 of TIM module 1**
	GTM_TIM0_IN6_4			**Mux input channel 6 of TIM module 0**
	MSC1_SDI0			**Upstream assynchronous input signal**
	ASCLIN6_ARXF			**Receive input**
	P23.1	O0		**General-purpose output**
	GTM_TOUT42	O1		**GTM muxed output**
	ASCLIN1_ARTS	O2		**Ready to send output**
	QSPI4_SLSO6	O3		**Master slave select output**
	GTM_CLK0	O4		**CGM generated clock**
	CAN10_TXD	O5		**CAN transmit output node 0**
	CCU_EXTCLK0	O6		**CCU external clock**
	ASCLIN6_ASCLK	O7		**Shift clock output**

Downloaded by IFXDMZlpar-zengzhe 12/02/2019 11:04:31

Table 2-37 Port 23 Functions (cont'd)

Ball	Symbol	Ctrl.	Buffer Type	Function
U20	P23.2	I	SLOW / PU1 / VEXT / ES	**General-purpose input**
	GTM_TIM6_IN5_1			**Mux input channel 5 of TIM module 6**
	GTM_TIM1_IN6_5			**Mux input channel 6 of TIM module 1**
	GTM_TIM0_IN6_5			**Mux input channel 6 of TIM module 0**
	ASCLIN7_ARXC			**Receive input**
	P23.2	O0		**General-purpose output**
	GTM_TOUT43	O1		**GTM muxed output**
	—	O2		**Reserved**
	—	O3		**Reserved**
	CAN23_TXD	O4		**CAN transmit output node 3**
	CAN12_TXD	O5		**CAN transmit output node 2**
	—	O6		**Reserved**
	—	O7		**Reserved**
T19	P23.3	I	SLOW / PU1 / VEXT / ES	**General-purpose input**
	GTM_TIM6_IN4_2			**Mux input channel 4 of TIM module 6**
	GTM_TIM1_IN7_4			**Mux input channel 7 of TIM module 1**
	GTM_TIM0_IN7_4			**Mux input channel 0 of TIM module 0**
	MSC1_INJ0			**Injection signal from port**
	ASCLIN6_ARXA			**Receive input**
	CAN12_RXDC			**CAN receive input node 2**
	CAN23_RXDB			**CAN receive input node 3**
	P23.3	O0		**General-purpose output**
	GTM_TOUT44	O1		**GTM muxed output**
	ASCLIN7_ATX	O2		**Transmit output**
	—	O3		**Reserved**
	—	O4		**Reserved**
	—	O5		**Reserved**
	—	O6		**Reserved**
	—	O7		**Reserved**

Downloaded by IFXDMZ|par-zengzhe 12/02/2019 11:04:31

Table 2-37 Port 23 Functions (cont'd)

Ball	Symbol	Ctrl.	Buffer Type	Function
T20	P23.4	I	FAST / PU1 / VEXT / ES	**General-purpose input**
	GTM_TIM6_IN3_2			**Mux input channel 3 of TIM module 6**
	GTM_TIM1_IN7_5			**Mux input channel 7 of TIM module 1**
	GTM_TIM0_IN7_5			**Mux input channel 0 of TIM module 0**
	P23.4	O0		**General-purpose output**
	GTM_TOUT45	O1		**GTM muxed output**
	ASCLIN6_ASLSO	O2		**Slave select signal output**
	QSPI4_SLSO5	O3		**Master slave select output**
	—	O4		**Reserved**
	MSC1_EN0	O5		**Chip Select**
	—	O6		**Reserved**
	—	O7		**Reserved**
T17	P23.5	I	FAST / PU1 / VEXT / ES	**General-purpose input**
	GTM_TIM6_IN2_2			**Mux input channel 2 of TIM module 6**
	GTM_TIM1_IN2_7			**Mux input channel 2 of TIM module 1**
	GTM_TIM0_IN2_7			**Mux input channel 2 of TIM module 0**
	P23.5	O0		**General-purpose output**
	GTM_TOUT46	O1		**GTM muxed output**
	ASCLIN6_ATX	O2		**Transmit output**
	QSPI4_SLSO4	O3		**Master slave select output**
	—	O4		**Reserved**
	MSC1_EN1	O5		**Chip Select**
	CAN22_TXD	O6		**CAN transmit output node 2**
	—	O7		**Reserved**
R17	P23.6	I	SLOW / PU1 / VEXT / ES	**General-purpose input**
	GTM_TIM6_IN1_2			**Mux input channel 1 of TIM module 6**
	GTM_TIM4_IN2_7			**Mux input channel 2 of TIM module 4**
	GTM_TIM1_IN2_10			**Mux input channel 2 of TIM module 1**
	CAN22_RXDC			**CAN receive input node 2**
	P23.6	O0		**General-purpose output**
	GTM_TOUT138	O1		**GTM muxed output**
	—	O2		**Reserved**
	—	O3		**Reserved**
	QSPI0_SLSO11	O4		**Master slave select output**
	CAN11_TXD	O5		**CAN transmit output node 1**
	—	O6		**Reserved**
	—	O7		**Reserved**

Downloaded by IFXDMZ|par-zengzhe 12/02/2019 11:04:31

Table 2-37 Port 23 Functions (cont'd)

Ball	Symbol	Ctrl.	Buffer Type	Function
R16	P23.7	I	SLOW / PU1 / VEXT / ES	**General-purpose input**
	GTM_TIM6_IN0_2			**Mux input channel 0 of TIM module 6**
	GTM_TIM4_IN3_7			**Mux input channel 3 of TIM module 4**
	GTM_TIM1_IN3_10			**Mux input channel 3 of TIM module 1**
	CAN11_RXDC			**CAN receive input node 1**
	P23.7	O0		**General-purpose output**
	GTM_TOUT139	O1		**GTM muxed output**
	—	O2		**Reserved**
	—	O3		**Reserved**
	—	O4		**Reserved**
	—	O5		**Reserved**
	—	O6		**Reserved**
	—	O7		**Reserved**

Table 2-38 Port 32 Functions

Ball	Symbol	Ctrl.	Buffer Type	Function
Y17	P32.0/VGATE1N	I	SLOW / PU1 / VEXT / ES	**General-purpose input** P32.0 / SMPS mode: analog output. External Pass Device gate control for EVRC
	GTM_TIM3_IN2_5			**Mux input channel 2 of TIM module 3**
	GTM_TIM2_IN2_5			**Mux input channel 2 of TIM module 2**
	P32.0	O0		**General-purpose output**
	GTM_TOUT36	O1		**GTM muxed output**
	—	O2		**Reserved**
	—	O3		**Reserved**
	—	O4		**Reserved**
	—	O5		**Reserved**
	—	O6		**Reserved**
	—	O7		**Reserved**

Downloaded by IFXDMZlpar-zengzhe 12/02/2019 11:04:31

Table 2-38 Port 32 Functions (cont'd)

Ball	Symbol	Ctrl.	Buffer Type	Function
W17	P32.1/VGATE1P	I	SLOW / PU1 / VEXT / ES	**General-purpose input** P32.1 / External Pass Device gate control for EVRC
	GTM_TIM3_IN3_15			**Mux input channel 3 of TIM module 3**
	P32.1	O0		**General-purpose output**
	GTM_TOUT37	O1		**GTM muxed output**
	—	O2		**Reserved**
	—	O3		**Reserved**
	—	O4		**Reserved**
	—	O5		**Reserved**
	—	O6		**Reserved**
	—	O7		**Reserved**
Y18	P32.2	I	SLOW / PU1 / VEXT / ES	**General-purpose input**
	GTM_TIM1_IN3_8			**Mux input channel 3 of TIM module 1**
	GTM_TIM0_IN3_8			**Mux input channel 3 of TIM module 0**
	CAN03_RXDB			**CAN receive input node 3**
	ASCLIN3_ARXD			**Receive input**
	CAN21_RXDD			**CAN receive input node 1**
	P32.2	O0		**General-purpose output**
	GTM_TOUT38	O1		**GTM muxed output**
	ASCLIN3_ATX	O2		**Transmit output**
	IOM_MON2_15			**Monitor input 2**
	IOM_REF2_15			**Reference input 2**
	—	O3		**Reserved**
	—	O4		**Reserved**
	—	O5		**Reserved**
	PMS_DCDCSYNCO	O6		**DCDC sync output**
	—	O7		**Reserved**

Downloaded by IFXDMZlpar-zengzhe 12/02/2019 11:04:31

Table 2-38 Port 32 Functions (cont'd)

Ball	Symbol	Ctrl.	Buffer Type	Function
Y19	P32.3	I	SLOW / PU1 / VEXT / ES	**General-purpose input**
	GTM_TIM1_IN4_5			**Mux input channel 4 of TIM module 1**
	GTM_TIM0_IN4_5			**Mux input channel 4 of TIM module 0**
	P32.3	O0		**General-purpose output**
	GTM_TOUT39	O1		**GTM muxed output**
	ASCLIN3_ATX	O2		**Transmit output**
	IOM_MON2_15			**Monitor input 2**
	IOM_REF2_15			**Reference input 2**
	—	O3		**Reserved**
	ASCLIN3_ASCLK	O4		**Shift clock output**
	CAN03_TXD	O5		**CAN transmit output node 3**
	IOM_MON2_8			**Monitor input 2**
	IOM_REF2_8			**Reference input 2**
	CAN21_TXD	O6		**CAN transmit output node 1**
	—	O7		**Reserved**
W18	P32.4	I	FAST / PU1 / VEXT / ES	**General-purpose input**
	GTM_TIM1_IN5_5			**Mux input channel 5 of TIM module 1**
	GTM_TIM0_IN5_5			**Mux input channel 5 of TIM module 0**
	ASCLIN1_ACTSB			**Clear to send input**
	MSC1_SDI2			**Upstream assynchronous input signal**
	P32.4	O0		**General-purpose output**
	GTM_TOUT40	O1		**GTM muxed output**
	—	O2		**Reserved**
	—	O3		**Reserved**
	GTM_CLK1	O4		**CGM generated clock**
	MSC1_EN0	O5		**Chip Select**
	CCU_EXTCLK1	O6		**CCU external clock**
	CCU60_COUT63	O7		**T13 PWM channel 63**
	IOM_MON1_6			**Monitor input 1**
	IOM_REF1_0			**Reference input 1**
	PMS_DCDCSYNCO	O		**DCDC sync output**

Downloaded by IFXDMZ|par-zengzhe 12/02/2019 11:04:31

Table 2-38 Port 32 Functions (cont'd)

Ball	Symbol	Ctrl.	Buffer Type	Function
T15	P32.5	I	SLOW / PU1 / VEXT / ES	**General-purpose input**
	GTM_TIM5_IN5_9			**Mux input channel 5 of TIM module 5**
	GTM_TIM4_IN1_14			**Mux input channel 1 of TIM module 4**
	GTM_TIM3_IN5_8			**Mux input channel 5 of TIM module 3**
	SENT_SENT10C			**Receive input channel 10**
	P32.5	O0		**General-purpose output**
	GTM_TOUT140	O1		**GTM muxed output**
	ASCLIN2_ATX	O2		**Transmit output**
	IOM_MON2_14			**Monitor input 2**
	IOM_REF2_14			**Reference input 2**
	—	O3		**Reserved**
	—	O4		**Reserved**
	—	O5		**Reserved**
	CAN02_TXD	O6		**CAN transmit output node 2**
	IOM_MON2_7			**Monitor input 2**
	IOM_REF2_7			**Reference input 2**
	—	O7		**Reserved**
U15	P32.6	I	SLOW / PU1 / VEXT / ES	**General-purpose input**
	GTM_TIM5_IN6_9			**Mux input channel 6 of TIM module 5**
	GTM_TIM4_IN4_15			**Mux input channel 4 of TIM module 4**
	GTM_TIM3_IN6_8			**Mux input channel 6 of TIM module 3**
	CAN02_RXDC			**CAN receive input node 2**
	CBS_TGI4			**Trigger input**
	ASCLIN2_ARXF			**Receive input**
	ASCLIN6_ARXC			**Receive input**
	SENT_SENT11C			**Receive input channel 11**
	P32.6	O0		**General-purpose output**
	GTM_TOUT141	O1		**GTM muxed output**
	—	O2		**Reserved**
	—	O3		**Reserved**
	QSPI2_SLSO12	O4		**Master slave select output**
	CAN22_TXD	O5		**CAN transmit output node 2**
	—	O6		**Reserved**
	—	O7		**Reserved**
	CBS_TGO4	O		**Trigger output**

Downloaded by IFXDMZlpar-zengzhe 12/02/2019 11:04:31

Table 2-38 Port 32 Functions (cont'd)

Ball	Symbol	Ctrl.	Buffer Type	Function
U16	P32.7	I	SLOW / PU1 / VEXT / ES	**General-purpose input**
	GTM_TIM5_IN7_8			**Mux input channel 7 of TIM module 5**
	GTM_TIM4_IN0_15			**Mux input channel 0 of TIM module 4**
	GTM_TIM3_IN7_8			**Mux input channel 7 of TIM module 3**
	CBS_TGI5			**Trigger input**
	CAN22_RXDB			**CAN receive input node 2**
	SENT_SENT12C			**Receive input channel 12**
	P32.7	O0		**General-purpose output**
	GTM_TOUT142	O1		**GTM muxed output**
	ASCLIN6_ATX	O2		**Transmit output**
	—	O3		**Reserved**
	—	O4		**Reserved**
	—	O5		**Reserved**
	—	O6		**Reserved**
	—	O7		**Reserved**
	CBS_TGO5	O		**Trigger output**

Downloaded by IFXDMZ|par-zengzhe 12/02/2019 11:04:31

Table 2-39 Port 33 Functions

Ball	Symbol	Ctrl.	Buffer Type	Function
W10	P33.0	I	SLOW / PU1 / VEVRSB / ES5	**General-purpose input**
	GTM_TIM3_IN0_13			**Mux input channel 0 of TIM module 3**
	GTM_TIM1_IN4_6			**Mux input channel 4 of TIM module 1**
	GTM_TIM0_IN4_6			**Mux input channel 4 of TIM module 0**
	EDSADC_ITR0E			**Trigger/Gate input**
	SENT_SENT13C			**Receive input channel 13**
	IOM_PIN_0			**GPIO pad input to FPC**
	GTM_DTMT1_2			**CDTM1_DTM0**
	EVADC_G10CH7	AI		**Analog input channel 7, group 10**
	EVADC_FC7CH0			**Analog input FC channel 7**
	P33.0	O0		**General-purpose output**
	GTM_TOUT22	O1		**GTM muxed output**
	IOM_MON0_0			**Monitor input 0**
	IOM_GTM_0			**GTM-provided inputs to EXOR combiner**
	ASCLIN5_ATX	O2		**Transmit output**
	—	O3		**Reserved**
	—	O4		**Reserved**
	—	O5		**Reserved**
	EVADC_FC2BFLOUT	O6		**Boundary flag output, FC channel 2**
	—	O7		**Reserved**

Downloaded by IFXDMZlpar-zengzhe 12/02/2019 11:04:31

Table 2-39 Port 33 Functions (cont'd)

Ball	Symbol	Ctrl.	Buffer Type	Function
Y10	P33.1	I	SLOW / PU1 / VEVRSB / ES5	**General-purpose input**
	GTM_TIM3_IN1_15			**Mux input channel 1 of TIM module 3**
	GTM_TIM1_IN5_6			**Mux input channel 5 of TIM module 1**
	GTM_TIM0_IN5_6			**Mux input channel 5 of TIM module 0**
	EDSADC_ITR1E			**Trigger/Gate input**
	PSI5_RX0C			**RXD inputs (receive data) channel 0**
	EDSADC_DSCIN2B			**Modulator clock input**
	SENT_SENT9C			**Receive input channel 9**
	ASCLIN8_ARXC			**Receive input**
	IOM_PIN_1			**GPIO pad input to FPC**
	EVADC_G10CH6	AI		**Analog input channel 6, group 10**
	EVADC_FC6CH0			**Analog input FC channel 6**
	P33.1	O0		**General-purpose output**
	GTM_TOUT23	O1		**GTM muxed output**
	IOM_MON0_1			**Monitor input 0**
	IOM_GTM_1			**GTM-provided inputs to EXOR combiner**
	ASCLIN3_ASLSO	O2		**Slave select signal output**
	QSPI2_SCLK	O3		**Master SPI clock output**
	EDSADC_DSCOUT2	O4		**Modulator clock output**
	EVADC_EMUX02	O5		**Control of external analog multiplexer interface 0**
	EVADC_FC4BFLOUT	O6		**Boundary flag output, FC channel 4**
	—	O7		**Reserved**

Downloaded by IFXDMZ|par-zengzhe 12/02/2019 11:04:31

Table 2-39 Port 33 Functions (cont'd)

Ball	Symbol	Ctrl.	Buffer Type	Function
W11	P33.2	I	SLOW / PU1 / VEVRSB / ES5	**General-purpose input**
	GTM_TIM3_IN2_14			**Mux input channel 2 of TIM module 3**
	GTM_TIM1_IN6_6			**Mux input channel 6 of TIM module 1**
	GTM_TIM0_IN6_6			**Mux input channel 6 of TIM module 0**
	EDSADC_ITR2E			**Trigger/Gate input**
	SENT_SENT8C			**Receive input channel 8**
	EDSADC_DSDIN2B			**Digital datastream input**
	IOM_PIN_2			**GPIO pad input to FPC**
	EVADC_G10CH5	AI		**Analog input channel 5, group 10**
	EVADC_FC5CH0			**Analog input FC channel 5**
	P33.2	O0		**General-purpose output**
	GTM_TOUT24	O1		**GTM muxed output**
	IOM_MON0_2			**Monitor input 0**
	IOM_GTM_2			**GTM-provided inputs to EXOR combiner**
	ASCLIN3_ASCLK	O2		**Shift clock output**
	QSPI2_SLSO10	O3		**Master slave select output**
	PSI5_TX0	O4		**TXD outputs (send data)**
	IOM_MON1_14			**Monitor input 1**
	IOM_REF1_14			**Reference input 1**
	EVADC_EMUX01	O5		**Control of external analog multiplexer interface 0**
	EVADC_FC3BFLOUT	O6		**Boundary flag output, FC channel 3**
	—	O7		**Reserved**

Downloaded by IFXDMZ|par-zengzhe 12/02/2019 11:04:31

Table 2-39 Port 33 Functions (cont'd)

Ball	Symbol	Ctrl.	Buffer Type	Function
Y11	P33.3	I	SLOW / PU1 / VEVRSB / ES5	**General-purpose input**
	GTM_TIM3_IN3_12			**Mux input channel 3 of TIM module 3**
	GTM_TIM1_IN7_6			**Mux input channel 7 of TIM module 1**
	GTM_TIM0_IN7_6			**Mux input channel 0 of TIM module 0**
	PSI5_RX1C			**RXD inputs (receive data) channel 1**
	SENT_SENT7C			**Receive input channel 7**
	EDSADC_DSCIN1B			**Modulator clock input**
	IOM_PIN_3			**GPIO pad input to FPC**
	EVADC_G10CH4	AI		**Analog input channel 4, group 10**
	EVADC_FC4CH0			**Analog input FC channel 4**
	P33.3	O0		**General-purpose output**
	GTM_TOUT25	O1		**GTM muxed output**
	IOM_MON0_3			**Monitor input 0**
	IOM_GTM_3			**GTM-provided inputs to EXOR combiner**
	ASCLIN5_ASCLK	O2		**Shift clock output**
	QSPI4_SLSO2	O3		**Master slave select output**
	EDSADC_DSCOUT1	O4		**Modulator clock output**
	EVADC_EMUX00	O5		**Control of external analog multiplexer interface 0**
	EVADC_FC5BFLOUT	O6		**Boundary flag output, FC channel 5**
	—	O7		**Reserved**

Downloaded by IFXDMZlpar-zengzhe 12/02/2019 11:04:31

Table 2-39 Port 33 Functions (cont'd)

Ball	Symbol	Ctrl.	Buffer Type	Function
W12	P33.4	I	SLOW / PU1 / VEVRSB / ES5	**General-purpose input**
	GTM_TIM4_IN4_10			**Mux input channel 4 of TIM module 4**
	GTM_TIM1_IN0_10			**Mux input channel 0 of TIM module 1**
	GTM_TIM0_IN0_10			**Mux input channel 0 of TIM module 0**
	EDSADC_ITR0F			**Trigger/Gate input**
	SENT_SENT6C			**Receive input channel 6**
	EDSADC_DSDIN1B			**Digital datastream input**
	CCU61_CTRAPC			**Trap input capture**
	ASCLIN5_ARXB			**Receive input**
	IOM_PIN_4			**GPIO pad input to FPC**
	GTM_DTMT2_0			**CDTM2_DTM0**
	EVADC_G10CH3	AI		**Analog input channel 3, group 10**
	P33.4	O0		**General-purpose output**
	GTM_TOUT26	O1		**GTM muxed output**
	IOM_MON0_4			**Monitor input 0**
	IOM_GTM_4			**GTM-provided inputs to EXOR combiner**
	ASCLIN2_ARTS	O2		**Ready to send output**
	QSPI2_SLSO12	O3		**Master slave select output**
	PSI5_TX1	O4		**TXD outputs (send data)**
	IOM_MON1_15			**Monitor input 1**
	EVADC_EMUX12	O5		**Control of external analog multiplexer interface 1**
	EVADC_FC0BFLOUT	O6		**Boundary flag output, FC channel 0**
	CAN13_TXD	O7		**CAN transmit output node 3**

Downloaded by IFXDMZlpar-zengzhe 12/02/2019 11:04:31

Table 2-39 Port 33 Functions (cont'd)

Ball	Symbol	Ctrl.	Buffer Type	Function
Y12	P33.5	I	SLOW / PU1 / VEVRSB / ES5	**General-purpose input**
	GTM_TIM4_IN5_10			**Mux input channel 5 of TIM module 4**
	GTM_TIM1_IN1_8			**Mux input channel 1 of TIM module 1**
	GTM_TIM0_IN1_8			**Mux input channel 1 of TIM module 0**
	EDSADC_DSCIN0B			**Modulator clock input**
	EDSADC_ITR1F			**Trigger/Gate input**
	GPT120_T4EUDB			**Count direction control input of timer T4**
	PSI5S_RXC			**RX data input**
	ASCLIN2_ACTSB			**Clear to send input**
	CCU61_CCPOS2C			**Hall capture input 2**
	PSI5_RX2C			**RXD inputs (receive data) channel 2**
	SENT_SENT5C			**Receive input channel 5**
	CAN13_RXDB			**CAN receive input node 3**
	IOM_PIN_5			**GPIO pad input to FPC**
	EVADC_G10CH2	AI		**Analog input channel 2, group 10**
	P33.5	O0		**General-purpose output**
	GTM_TOUT27	O1		**GTM muxed output**
	IOM_MON0_5			**Monitor input 0**
	IOM_GTM_5			**GTM-provided inputs to EXOR combiner**
	QSPI0_SLSO7	O2		**Master slave select output**
	QSPI1_SLSO7	O3		**Master slave select output**
	EDSADC_DSCOUT0	O4		**Modulator clock output**
	EVADC_EMUX11	O5		**Control of external analog multiplexer interface 1**
	EVADC_FC2BFLOUT	O6		**Boundary flag output, FC channel 2**
	ASCLIN5_ASLSO	O7		**Slave select signal output**

Downloaded by IFXDMZlpar-zengzhe 12/02/2019 11:04:31

Table 2-39 Port 33 Functions (cont'd)

Ball	Symbol	Ctrl.	Buffer Type	Function
W13	P33.6	I	SLOW / PU1 / VEVRSB / ES5	**General-purpose input**
	GTM_TIM1_IN2_9			**Mux input channel 2 of TIM module 1**
	GTM_TIM0_IN2_9			**Mux input channel 2 of TIM module 0**
	EDSADC_ITR2F			**Trigger/Gate input**
	GPT120_T2EUDB			**Count direction control input of timer T2**
	SENT_SENT4C			**Receive input channel 4**
	CCU61_CCPOS1C			**Hall capture input 1**
	EDSADC_DSDIN0B			**Digital datastream input**
	ASCLIN8_ARXD			**Receive input**
	IOM_PIN_6			**GPIO pad input to FPC**
	GTM_DTMT2_1			**CDTM2_DTM0**
	EVADC_G10CH1	AI		**Analog input channel 1, group 10**
	P33.6	O0		**General-purpose output**
	GTM_TOUT28	O1		**GTM muxed output**
	IOM_MON0_6			**Monitor input 0**
	IOM_GTM_6			**GTM-provided inputs to EXOR combiner**
	ASCLIN2_ASLSO	O2		**Slave select signal output**
	QSPI2_SLSO11	O3		**Master slave select output**
	PSI5_TX2	O4		**TXD outputs (send data)**
	IOM_REF1_15			**Reference input 1**
	EVADC_EMUX10	O5		**Control of external analog multiplexer interface 1**
	EVADC_FC1BFLOUT	O6		**Boundary flag output, FC channel 1**
	PSI5S_TX	O7		**TX data output**

Downloaded by IFXDMZlpar-zengzhe 12/02/2019 11:04:31

Table 2-39 Port 33 Functions (cont'd)

Ball	Symbol	Ctrl.	Buffer Type	Function
Y13	P33.7	I	SLOW / PU1 / VEVRSB / ES5	**General-purpose input**
	GTM_TIM1_IN3_9			**Mux input channel 3 of TIM module 1**
	GTM_TIM0_IN3_9			**Mux input channel 3 of TIM module 0**
	CAN00_RXDE			**CAN receive input node 0**
	GPT120_T2INB			**Trigger/gate input of timer T2**
	CCU61_CCPOS0C			**Hall capture input 0**
	SCU_E_REQ4_0			**ERU Channel 4 inputs 0 to 5 (0 is the LSB and 5 is the MSB)**
	SENT_SENT14C			**Receive input channel 14**
	IOM_PIN_7			**GPIO pad input to FPC**
	EVADC_G10CH0	AI		**Analog input channel 0, group 10**
	P33.7	O0		**General-purpose output**
	GTM_TOUT29	O1		**GTM muxed output**
	IOM_MON0_7			**Monitor input 0**
	IOM_GTM_7			**GTM-provided inputs to EXOR combiner**
	ASCLIN2_ASCLK	O2		**Shift clock output**
	QSPI4_SLSO7	O3		**Master slave select output**
	ASCLIN8_ATX	O4		**Transmit output**
	—	O5		**Reserved**
	EVADC_FC3BFLOUT	O6		**Boundary flag output, FC channel 3**
	—	O7		**Reserved**

Downloaded by IFXDMZlpar-zengzhe 12/02/2019 11:04:31

Table 2-39 Port 33 Functions (cont'd)

Ball	Symbol	Ctrl.	Buffer Type	Function
W14	P33.8	I	FAST / HighZ / VEVRSB	**General-purpose input**
	GTM_TIM1_IN4_7			**Mux input channel 4 of TIM module 1**
	GTM_TIM0_IN4_7			**Mux input channel 4 of TIM module 0**
	ASCLIN2_ARXE			**Receive input**
	SCU_EMGSTOP_PORT_A			**Emergency stop Port Pin A input request**
	IOM_PIN_8			**GPIO pad input to FPC**
	P33.8	O0		**General-purpose output**
	GTM_TOUT30	O1		**GTM muxed output**
	IOM_MON0_8			**Monitor input 0**
	ASCLIN2_ATX	O2		**Transmit output**
	IOM_MON2_14			**Monitor input 2**
	IOM_REF2_14			**Reference input 2**
	QSPI4_SLSO2	O3		**Master slave select output**
	—	O4		**Reserved**
	CAN00_TXD	O5		**CAN transmit output node 0**
	IOM_MON2_5			**Monitor input 2**
	IOM_REF2_5			**Reference input 2**
	—	O6		**Reserved**
	CCU61_COUT62	O7		**T12 PWM channel 62**
	IOM_MON1_13			**Monitor input 1**
	IOM_REF1_8			**Reference input 1**
	SMU_FSP0	O		**FSP[1..0] Output Signals - Generated by SMU_core**

Downloaded by IFXDMZ|par-zengzhe 12/02/2019 11:04:31

Table 2-39 Port 33 Functions (cont'd)

Ball	Symbol	Ctrl.	Buffer Type	Function
Y14	P33.9	I	SLOW / PU1 / VEVRSB / ES5	**General-purpose input**
	GTM_TIM1_IN1_9			**Mux input channel 1 of TIM module 1**
	GTM_TIM0_IN1_9			**Mux input channel 1 of TIM module 0**
	QSPI3_HSICINA			**Highspeed capture channel**
	IOM_PIN_9			**GPIO pad input to FPC**
	P33.9	O0		**General-purpose output**
	GTM_TOUT31	O1		**GTM muxed output**
	IOM_MON0_9			**Monitor input 0**
	ASCLIN2_ATX	O2		**Transmit output**
	IOM_MON2_14			**Monitor input 2**
	IOM_REF2_14			**Reference input 2**
	QSPI4_SLSO1	O3		**Master slave select output**
	ASCLIN2_ASCLK	O4		**Shift clock output**
	CAN01_TXD	O5		**CAN transmit output node 1**
	IOM_MON2_6			**Monitor input 2**
	IOM_REF2_6			**Reference input 2**
	ASCLIN0_ATX	O6		**Transmit output**
	IOM_MON2_12			**Monitor input 2**
	IOM_REF2_12			**Reference input 2**
	CCU61_CC62	O7		**T12 PWM channel 62**
	IOM_MON1_10			**Monitor input 1**
	IOM_REF1_11			**Reference input 1**

Downloaded by IFXDMZlpar-zengzhe 12/02/2019 11:04:31

Table 2-39 Port 33 Functions (cont'd)

Ball	Symbol	Ctrl.	Buffer Type	Function
W15	P33.10	I	FAST / PU1 / VEVRSB / ES5	**General-purpose input**
	GTM_TIM4_IN4_14			**Mux input channel 4 of TIM module 4**
	GTM_TIM1_IN0_9			**Mux input channel 0 of TIM module 1**
	GTM_TIM0_IN0_9			**Mux input channel 0 of TIM module 0**
	QSPI4_SLSIA			**Slave select input**
	QSPI3_HSICINB			**Highspeed capture channel**
	CAN01_RXDD			**CAN receive input node 1**
	ASCLIN0_ARXD			**Receive input**
	IOM_PIN_10			**GPIO pad input to FPC**
	P33.10	O0		**General-purpose output**
	GTM_TOUT32	O1		**GTM muxed output**
	IOM_MON0_10			**Monitor input 0**
	QSPI1_SLSO6	O2		**Master slave select output**
	QSPI4_SLSO0	O3		**Master slave select output**
	ASCLIN1_ASLSO	O4		**Slave select signal output**
	PSI5S_CLK	O5		**PSISCLK is a clock that can be used on a pin to drive the external PHY.**
	—	O6		**Reserved**
	CCU61_COUT61	O7		**T12 PWM channel 61**
	IOM_MON1_12			**Monitor input 1**
	IOM_REF1_9			**Reference input 1**
	SMU_FSP1	O		**FSP[1..0] Output Signals - Generated by SMU_core**
Y15	P33.11	I	FAST / PU1 / VEVRSB / ES5	**General-purpose input**
	GTM_TIM1_IN2_8			**Mux input channel 2 of TIM module 1**
	GTM_TIM0_IN2_8			**Mux input channel 2 of TIM module 0**
	QSPI4_SCLKA			**Slave SPI clock inputs**
	IOM_PIN_11			**GPIO pad input to FPC**
	P33.11	O0		**General-purpose output**
	GTM_TOUT33	O1		**GTM muxed output**
	IOM_MON0_11			**Monitor input 0**
	ASCLIN1_ASCLK	O2		**Shift clock output**
	QSPI4_SCLK	O3		**Master SPI clock output**
	—	O4		**Reserved**
	—	O5		**Reserved**
	EDSADC_CGPWMN	O6		**Negative carrier generator output**
	CCU61_CC61	O7		**T12 PWM channel 61**
	IOM_MON1_9			**Monitor input 1**
	IOM_REF1_12			**Reference input 1**

Downloaded by IFXDMZ\par-zengzhe 12/02/2019 11:04:31

Table 2-39 Port 33 Functions (cont'd)

Ball	Symbol	Ctrl.	Buffer Type	Function
W16	P33.12	I	FAST / PU1 / VEVRSB / ES5	**General-purpose input**
	GTM_TIM3_IN0_6			**Mux input channel 0 of TIM module 3**
	GTM_TIM2_IN0_6			**Mux input channel 0 of TIM module 2**
	QSPI4_MTSRA			**Save SPI data input**
	CAN00_RXDD			**CAN receive input node 0**
	PMS_PINBWKP			**PINB (P33.12) pin input**
	IOM_PIN_12			**GPIO pad input to FPC**
	P33.12	O0		**General-purpose output**
	GTM_TOUT34	O1		**GTM muxed output**
	IOM_MON0_12			**Monitor input 0**
	ASCLIN1_ATX	O2		**Transmit output**
	IOM_MON2_13			**Monitor input 2**
	IOM_REF2_13			**Reference input 2**
	QSPI4_MTSR	O3		**Master SPI data output**
	ASCLIN1_ASCLK	O4		**Shift clock output**
	CAN22_TXD	O5		**CAN transmit output node 2**
	EDSADC_CGPWMP	O6		**Positive carrier generator output**
	CCU61_COUT60	O7		**T12 PWM channel 60**
	IOM_MON1_11			**Monitor input 1**
	IOM_REF1_10			**Reference input 1**

Downloaded by IFXDMZlpar-zengzhe 12/02/2019 11:04:31

Table 2-39 Port 33 Functions (cont'd)

Ball	Symbol	Ctrl.	Buffer Type	Function
Y16	P33.13	I	FAST / PU1 / VEVRSB / ES5	**General-purpose input**
	GTM_TIM3_IN1_5			**Mux input channel 1 of TIM module 3**
	GTM_TIM2_IN1_5			**Mux input channel 1 of TIM module 2**
	ASCLIN1_ARXF			**Receive input**
	EDSADC_SGNB			**Carrier sign signal input**
	QSPI4_MRSTA			**Master SPI data input**
	MSC1_INJ1			**Injection signal from port**
	CAN22_RXDA			**CAN receive input node 2**
	P33.13	O0		**General-purpose output**
	GTM_TOUT35	O1		**GTM muxed output**
	ASCLIN1_ATX	O2		**Transmit output**
	IOM_MON2_13			**Monitor input 2**
	IOM_REF2_13			**Reference input 2**
	QSPI4_MRST	O3		**Slave SPI data output**
	IOM_MON2_4			**Monitor input 2**
	IOM_REF2_4			**Reference input 2**
	QSPI2_SLSO6	O4		**Master slave select output**
	CAN00_TXD	O5		**CAN transmit output node 0**
	IOM_MON2_5			**Monitor input 2**
	IOM_REF2_5			**Reference input 2**
	—	O6		**Reserved**
	CCU61_CC60	O7		**T12 PWM channel 60**
	IOM_MON1_8			**Monitor input 1**
	IOM_REF1_13			**Reference input 1**

Downloaded by IFXDMZlpar-zengzhe 12/02/2019 11:04:31

Table 2-39 Port 33 Functions (cont'd)

Ball	Symbol	Ctrl.	Buffer Type	Function
T14	P33.14	I	FAST / PU1 / VEVRSB / ES5	**General-purpose input**
	GTM_TIM5_IN0_8			**Mux input channel 0 of TIM module 5**
	GTM_TIM4_IN5_14			**Mux input channel 5 of TIM module 4**
	GTM_TIM2_IN0_8			**Mux input channel 0 of TIM module 2**
	QSPI2_SCLKD			**Slave SPI clock inputs**
	CBS_TGI6			**Trigger input**
	P33.14	O0		**General-purpose output**
	GTM_TOUT143	O1		**GTM muxed output**
	—	O2		**Reserved**
	QSPI2_SCLK	O3		**Master SPI clock output**
	—	O4		**Reserved**
	—	O5		**Reserved**
	—	O6		**Reserved**
	CCU60_CC62	O7		**T12 PWM channel 62**
	IOM_MON1_0			**Monitor input 1**
	IOM_REF1_4			**Reference input 1**
	CBS_TGO6	O		**Trigger output**
U14	P33.15	I	SLOW / PU1 / VEVRSB / ES5	**General-purpose input**
	GTM_TIM5_IN1_9			**Mux input channel 1 of TIM module 5**
	GTM_TIM4_IN6_12			**Mux input channel 6 of TIM module 4**
	GTM_TIM2_IN1_7			**Mux input channel 1 of TIM module 2**
	CBS_TGI7			**Trigger input**
	P33.15	O0		**General-purpose output**
	GTM_TOUT144	O1		**GTM muxed output**
	—	O2		**Reserved**
	QSPI2_SLSO11	O3		**Master slave select output**
	—	O4		**Reserved**
	—	O5		**Reserved**
	—	O6		**Reserved**
	CCU60_COUT62	O7		**T12 PWM channel 62**
	IOM_MON1_5			**Monitor input 1**
	IOM_REF1_1			**Reference input 1**
	CBS_TGO7	O		**Trigger output**

Downloaded by IFXDMZlpar-zengzhe 12/02/2019 11:04:31

Table 2-40 Port 34 Functions

Ball	Symbol	Ctrl.	Buffer Type	Function
U11	P34.1	I	SLOW / PU1 / VEVRSB / ES5	**General-purpose input**
	GTM_TIM5_IN3_9			**Mux input channel 3 of TIM module 5**
	GTM_TIM3_IN4_12			**Mux input channel 4 of TIM module 3**
	GTM_TIM2_IN3_9			**Mux input channel 3 of TIM module 2**
	EVADC_G10CH11	AI		**Analog input channel 11, group 10**
	P34.1	O0		**General-purpose output**
	GTM_TOUT146	O1		**GTM muxed output**
	ASCLIN4_ATX	O2		**Transmit output**
	—	O3		**Reserved**
	CAN00_TXD	O4		**CAN transmit output node 0**
	IOM_MON2_5			**Monitor input 2**
	IOM_REF2_5			**Reference input 2**
	CAN20_TXD	O5		**CAN transmit output node 0**
	—	O6		**Reserved**
	CCU60_COUT63	O7		**T13 PWM channel 63**
	IOM_MON1_6			**Monitor input 1**
	IOM_REF1_0			**Reference input 1**
T12	P34.2	I	SLOW / PU1 / VEVRSB / ES	**General-purpose input**
	GTM_TIM5_IN4_9			**Mux input channel 4 of TIM module 5**
	GTM_TIM3_IN5_13			**Mux input channel 5 of TIM module 3**
	GTM_TIM2_IN4_8			**Mux input channel 4 of TIM module 2**
	ASCLIN4_ARXB			**Receive input**
	CAN00_RXDG			**CAN receive input node 0**
	CAN20_RXDC			**CAN receive input node 0**
	EVADC_G10CH10	AI		**Analog input channel 10, group 10**
	P34.2	O0		**General-purpose output**
	GTM_TOUT147	O1		**GTM muxed output**
	—	O2		**Reserved**
	—	O3		**Reserved**
	—	O4		**Reserved**
	—	O5		**Reserved**
	—	O6		**Reserved**
	CCU60_CC60	O7		**T12 PWM channel 60**
	IOM_MON1_2			**Monitor input 1**
	IOM_REF1_6			**Reference input 1**

Downloaded by IFXDMZlpar-zengzhe 12/02/2019 11:04:31

Table 2-40 Port 34 Functions (cont'd)

Ball	Symbol	Ctrl.	Buffer Type	Function
U12	P34.3	I	SLOW / PU1 / VEVRSB / ES	**General-purpose input**
	GTM_TIM5_IN5_10			**Mux input channel 5 of TIM module 5**
	GTM_TIM3_IN6_13			**Mux input channel 6 of TIM module 3**
	GTM_TIM2_IN5_9			**Mux input channel 5 of TIM module 2**
	EVADC_G10CH9	AI		**Analog input channel 9, group 10**
	P34.3	O0		**General-purpose output**
	GTM_TOUT148	O1		**GTM muxed output**
	ASCLIN4_ASCLK	O2		**Shift clock output**
	—	O3		**Reserved**
	QSPI2_SLSO10	O4		**Master slave select output**
	—	O5		**Reserved**
	—	O6		**Reserved**
	CCU60_COUT60	O7		**T12 PWM channel 60**
	IOM_MON1_3			**Monitor input 1**
	IOM_REF1_3			**Reference input 1**
T13	P34.4	I	SLOW / PU1 / VEVRSB / ES	**General-purpose input**
	GTM_TIM5_IN6_10			**Mux input channel 6 of TIM module 5**
	GTM_TIM3_IN7_12			**Mux input channel 7 of TIM module 3**
	GTM_TIM2_IN6_8			**Mux input channel 6 of TIM module 2**
	QSPI2_MRSTD			**Master SPI data input**
	EVADC_G10CH8	AI		**Analog input channel 8, group 10**
	P34.4	O0		**General-purpose output**
	GTM_TOUT149	O1		**GTM muxed output**
	ASCLIN4_ASLSO	O2		**Slave select signal output**
	—	O3		**Reserved**
	QSPI2_MRST	O4		**Slave SPI data output**
	IOM_MON2_2			**Monitor input 2**
	IOM_REF2_2			**Reference input 2**
	—	O5		**Reserved**
	EVADC_FC6BFLOUT	O6		**Boundary flag output, FC channel 6**
	CCU60_CC61	O7		**T12 PWM channel 61**
	IOM_MON1_1			**Monitor input 1**
	IOM_REF1_5			**Reference input 1**

Downloaded by IFXDMZlpar-zengzhe 12/02/2019 11:04:31

Table 2-40 Port 34 Functions (cont'd)

Ball	Symbol	Ctrl.	Buffer Type	Function
U13	P34.5	I	FAST / PU1 / VEVRSB / ES	**General-purpose input**
	GTM_TIM5_IN7_9			**Mux input channel 7 of TIM module 5**
	GTM_TIM4_IN7_12			**Mux input channel 7 of TIM module 4**
	GTM_TIM2_IN7_9			**Mux input channel 7 of TIM module 2**
	QSPI2_MTSRD			**Save SPI data input**
	ASCLIN8_ARXE			**Receive input**
	P34.5	O0		**General-purpose output**
	GTM_TOUT150	O1		**GTM muxed output**
	ASCLIN8_ATX	O2		**Transmit output**
	—	O3		**Reserved**
	QSPI2_MTSR	O4		**Master SPI data output**
	—	O5		**Reserved**
	EVADC_FC7BFLOUT	O6		**Boundary flag output, FC channel 7**
	CCU60_COUT61	O7		**T12 PWM channel 61**
	IOM_MON1_4			**Monitor input 1**
	IOM_REF1_2			**Reference input 1**

Table 2-41 Analog Inputs

Ball	Symbol	Ctrl.	Buffer Type	Function
T10	AN0	I	D / HighZ / VDDM	**Analog Input 0**
	EVADC_G0CH0			**Analog input channel 0, group 0**
	EDSADC_EDS3PA			**Positive analog input channel 3, pin A**
U10	AN1	I	D / HighZ / VDDM	**Analog Input 1**
	EVADC_G0CH1			**Analog input channel 1, group 0**
	EDSADC_EDS3NA			**Negative analog input channel 3, pin A**
W9	AN2	I	D / HighZ / VDDM	**Analog Input 2**
	EVADC_G0CH2			**Analog input channel 2, group 0**
	EDSADC_EDS0PA			**Positive analog input channel 0, pin A**
U9	AN3	I	D / HighZ / VDDM	**Analog Input 3**
	EVADC_G0CH3			**Analog input channel 3, group 0**
	EDSADC_EDS0NA			**Negative analog input channel 0, pin A**
T9	AN4	I	D / HighZ / VDDM	**Analog Input 4**
	EVADC_G11CH0			**Analog input channel 0, group 11**
	EVADC_G0CH4			**Analog input channel 4, group 0**
Y9	AN5	I	D / HighZ / VDDM	**Analog Input 5**
	EVADC_G11CH1			**Analog input channel 1, group 11**
	EVADC_G0CH5			**Analog input channel 5, group 0**

Downloaded by IFXDMZ|par-zengzhe 12/02/2019 11:04:31

Table 2-41 Analog Inputs (cont'd)

Ball	Symbol	Ctrl.	Buffer Type	Function
T8	AN6	I	D / HighZ / VDDM	**Analog Input 6**
	EVADC_G11CH2			**Analog input channel 2, group 11**
	EVADC_G0CH6			**Analog input channel 6, group 0**
U8	AN7	I	D / HighZ / VDDM	**Analog Input 7**
	EVADC_G11CH3			**Analog input channel 3, group 11**
	EVADC_G0CH7			**Analog input channel 7, group 0**
W8	AN8	I	D / HighZ / VDDM	**Analog Input 8**
	EVADC_G11CH4			**Analog input channel 4, group 11**
	EVADC_G1CH0			**Analog input channel 0, group 1**
U7	AN9	I	D / HighZ / VDDM	**Analog Input 9**
	EVADC_G11CH5			**Analog input channel 5, group 11**
	EVADC_G1CH1			**Analog input channel 1, group 1**
Y8	AN10	I	D / HighZ / VDDM	**Analog Input 10**
	EVADC_G11CH6			**Analog input channel 6, group 11**
	EVADC_G1CH2			**Analog input channel 2, group 1**
W7	AN11	I	D / HighZ / VDDM	**Analog Input 11**
	EVADC_G11CH7			**Analog input channel 7, group 11**
	EVADC_G1CH3			**Analog input channel 3, group 1**
T7	AN12	I	D / HighZ / VDDM	**Analog Input 12**
	EVADC_G1CH4			**Analog input channel 4, group 1**
	EDSADC_EDS0PB			**Positive analog input channel 0, pin B**
W6	AN13	I	D / HighZ / VDDM	**Analog Input 13**
	EVADC_G1CH5			**Analog input channel 5, group 1**
	EDSADC_EDS0NB			**Negative analog input channel 0, pin B**
U6	AN14	I	D / HighZ / VDDM	**Analog Input 14**
	EVADC_G1CH6			**Analog input channel 6, group 1**
	EDSADC_EDS3PB			**Positive analog input channel 3, pin B**
T6	AN15	I	D / HighZ / VDDM	**Analog Input 15**
	EVADC_G1CH7			**Analog input channel 7, group 1**
	EDSADC_EDS3NB			**Negative analog input channel 3, pin N**
W5	AN16	I	D / HighZ / VDDM	**Analog Input 16**
	EVADC_G2CH0			**Analog input channel 0, group 2**
	EVADC_FC0CH0			**Analog input FC channel 0**
U5	AN17/P40.10	I	S / HighZ / VDDM	**Analog Input 17**
	SENT_SENT10A			**Receive input channel 10**
	EVADC_G2CH1			**Analog input channel 1, group 2**
	EVADC_FC1CH0			**Analog input FC channel 1**

Downloaded by IFXDMZ|par-zengzhe 12/02/2019 11:04:31

Table 2-41 Analog Inputs (cont'd)

Ball	Symbol	Ctrl.	Buffer Type	Function
W4	AN18/P40.11	I	S / HighZ / VDDM	**Analog Input 18**
	SENT_SENT11A			**Receive input channel 11**
	EVADC_G11CH8			**Analog input channel 8, group 11**
	EVADC_G2CH2			**Analog input channel 2, group 2**
W3	AN19/P40.12	I	S / HighZ / VDDM	**Analog Input 19**
	SENT_SENT12A			**Receive input channel 12**
	EVADC_G11CH9			**Analog input channel 9, group 11**
	EVADC_G2CH3			**Analog input channel 3, group 2**
Y3	AN20	I	D / HighZ / VDDM	**Analog Input 20**
	EVADC_G2CH4			**Analog input channel 4, group 2**
	EDSADC_EDS2PA			**Positive analog input channel 2, pin A**
Y2	AN21	I	D / HighZ / VDDM	**Analog Input 21**
	EVADC_G2CH5			**Analog input channel 5, group 2**
	EDSADC_EDS2NA			**Negative analog input channel 2, pin A**
T5	AN22	I	D / HighZ / VDDM	**Analog Input 22**
	EVADC_G2CH6			**Analog input channel 6, group 2**
R5	AN23	I	D / HighZ / VDDM	**Analog Input 23**
	EVADC_G2CH7			**Analog input channel 7, group 2**
W2	AN24/P40.0	I	S / HighZ / VDDM	**Analog Input 24**
	SENT_SENT0A			**Receive input channel 0**
	EVADC_G3CH0			**Analog input channel 0, group 3**
	CCU60_CCPOS0D			**Hall capture input 0**
	EDSADC_EDS2PB			**Positive analog input channel 2, pin B**
W1	AN25/P40.1	I	S / HighZ / VDDM	**Analog Input 25**
	SENT_SENT1A			**Receive input channel 1**
	EVADC_G3CH1			**Analog input channel 1, group 3**
	CCU60_CCPOS1B			**Hall capture input 1**
	EDSADC_EDS2NB			**Negative analog input channel 2, pin B**
V2	AN26/P40.2	I	S / HighZ / VDDM	**Analog Input 26**
	SENT_SENT2A			**Receive input channel 2**
	EVADC_G3CH2			**Analog input channel 2, group 3**
	CCU60_CCPOS1D			**Hall capture input 1**
	EVADC_G11CH10			**Analog input channel 10, group 11**
V1	AN27/P40.3	I	S / HighZ / VDDM	**Analog Input 27**
	SENT_SENT3A			**Receive input channel 3**
	EVADC_G3CH3			**Analog input channel 3, group 3**
	CCU60_CCPOS2B			**Hall capture input 2**
	EVADC_G11CH11			**Analog input channel 11, group 11**

Downloaded by IFXDMZ|par-zengzhe 12/02/2019 11:04:31

Table 2-41 Analog Inputs (cont'd)

Ball	Symbol	Ctrl.	Buffer Type	Function
U2	AN28/P40.13	I	S / HighZ / VDDM	**Analog Input 28**
	SENT_SENT13A			**Receive input channel 13**
	EVADC_G3CH4			**Analog input channel 4, group 3**
	EVADC_G4CH4			**Analog input channel 4, group 4**
U1	AN29/P40.14	I	S / HighZ / VDDM	**Analog Input 29**
	SENT_SENT14A			**Receive input channel 14**
	EVADC_G3CH5			**Analog input channel 5, group 3**
	EVADC_G4CH5			**Analog input channel 5, group 4**
T4	AN30	I	D / HighZ / VDDM	**Analog Input 30**
	EVADC_G3CH6			**Analog input channel 6, group 3**
	EVADC_G4CH6			**Analog input channel 6, group 4**
R4	AN31	I	D / HighZ / VDDM	**Analog Input 31**
	EVADC_G3CH7			**Analog input channel 7, group 3**
	EVADC_G4CH7			**Analog input channel 7, group 4**
P4	AN32/P40.4	I	S / HighZ / VDDM	**Analog Input 32**
	SENT_SENT4A			**Receive input channel 4**
	EVADC_G8CH0			**Analog input channel 0, group 8**
	CCU60_CCPOS2D			**Hall capture input 2**
	EVADC_G11CH12			**Analog input channel 12, group 11**
R1	AN33/P40.5	I	S / HighZ / VDDM	**Analog Input 33**
	SENT_SENT5A			**Receive input channel 5**
	EVADC_G8CH1			**Analog input channel 1, group 8**
	CCU61_CCPOS0D			**Hall capture input 0**
	EVADC_G11CH13			**Analog input channel 13, group 11**
P5	AN34	I	D / HighZ / VDDM	**Analog Input 34**
	EVADC_G8CH2			**Analog input channel 2, group 8**
	EVADC_G11CH14			**Analog input channel 14, group 11**
R2	AN35	I	D / HighZ / VDDM	**Analog Input 35**
	EVADC_G8CH3			**Analog input channel 3, group 8**
	EVADC_G11CH15			**Analog input channel 15, group 11**
N4	AN36/P40.6	I	S / HighZ / VDDM	**Analog Input 36**
	SENT_SENT6A			**Receive input channel 6**
	EVADC_G8CH4			**Analog input channel 4, group 8**
	CCU61_CCPOS1B			**Hall capture input 1**
	EDSADC_EDS1PA			**Positive analog input channel 1, pin A**

Downloaded by IFXDMZ|par-zengzhe 12/02/2019 11:04:31

Table 2-41 Analog Inputs (cont'd)

Ball	Symbol	Ctrl.	Buffer Type	Function
P2	AN37/P40.7	I	S / HighZ / VDDM	**Analog Input 37**
	SENT_SENT7A			**Receive input channel 7**
	EVADC_G8CH5			**Analog input channel 5, group 8**
	CCU61_CCPOS1D			**Hall capture input 1**
	EDSADC_EDS1NA			**Negative analog input channel 1, pin A**
N5	AN38/P40.8	I	S / HighZ / VDDM	**Analog Input 38**
	SENT_SENT8A			**Receive input channel 8**
	EVADC_G8CH6			**Analog input channel 6, group 8**
	CCU61_CCPOS2B			**Hall capture input 2**
	EDSADC_EDS1PB			**Positive analog input channel 1, pin B**
P1	AN39/P40.9	I	S / HighZ / VDDM	**Analog Input 39**
	SENT_SENT9A			**Receive input channel 9**
	EVADC_G8CH7			**Analog input channel 7, group 8**
	CCU61_CCPOS2D			**Hall capture input 2**
	EDSADC_EDS1NB			**Negative analog input channel 1, pin B**
M5	AN40	I	D / HighZ / VDDM	**Analog Input 40**
	EVADC_G8CH8			**Analog input channel 8, group 8**
	EVADC_G4CH0			**Analog input channel 0, group 4**
M4	AN41	I	D / HighZ / VDDM	**Analog Input 41**
	EVADC_G8CH9			**Analog input channel 9, group 8**
	EVADC_G4CH1			**Analog input channel 1, group 4**
L5	AN42	I	D / HighZ / VDDM	**Analog Input 42**
	EVADC_G8CH10			**Analog input channel 10, group 8**
	EVADC_G4CH2			**Analog input channel 2, group 4**
L4	AN43	I	D / HighZ / VDDM	**Analog Input 43**
	EVADC_G8CH11			**Analog input channel 11, group 8**
	EVADC_G4CH3			**Analog input channel 3, group 4**
N1	AN44	I	D / HighZ / VDDM	**Analog Input 44**
	EVADC_G8CH12			**Analog input channel 12, group 8**
	EDSADC_EDS1PC			**Positive analog input channel 1, pin C**
N2	AN45	I	D / HighZ / VDDM	**Analog Input 45**
	EVADC_G8CH13			**Analog input channel 13, group 8**
	EDSADC_EDS1NC			**Negative analog input channel 1, pin C**
M1	AN46	I	D / HighZ / VDDM	**Analog Input 46**
	EVADC_G8CH14			**Analog input channel 14, group 8**
	EDSADC_EDS1PD			**Positive analog input channel 1, pin D**

Downloaded by IFXDMZ|par-zengzhe 12/02/2019 11:04:31

Table 2-41 Analog Inputs (cont'd)

Ball	Symbol	Ctrl.	Buffer Type	Function
M2	AN47	I	D / HighZ / VDDM	**Analog Input 47**
	EVADC_G8CH15			**Analog input channel 15, group 8**
	EDSADC_EDS1ND			**Negative analog input channel 1, pin D**

Table 2-42 System I/O

Ball	Symbol	Ctrl.	Buffer Type	Function
L7	AGBTCLKN (VSS)	I	LVDS_RX / VEXT	**AGBT Input;(TC3xx devices without AGBT: VSS)**
K7	AGBTCLKP (VSS)	I	LVDS_RX / VEXT	**AGBT Input;(TC3xx devices without AGBT: VSS)**
P10	AGBTTXN (VSS)	O	LVDS_TX / VEXT	**AGBT Output;(TC3xx devices without AGBT: VSS)**
P11	AGBTTXP (VSS)	O	LVDS_TX / VEXT	**AGBT Output;(TC3xx devices without AGBT: VSS)**
L14	AGBTERR (VSS)	I	FAST / PD / VEXT	**AGBT Input;(TC3xx devices without AGBT: VSS)**
W17	P32.1/VGATE1P	O	—	**DCDC P ch. MOSFET gate driver output** P32.1 / External Pass Device gate control for EVRC
Y17	P32.0/VGATE1N	O	—	**DCDC N ch. MOSFET gate driver output** P32.0 / SMPS mode: analog output. External Pass Device gate control for EVRC
M20	XTAL1	I	XTAL / VEXTOSC	**XTAL1. Main Oscillator/PLL/Clock Generator Input.**
M19	XTAL2	O	XTAL / VEXTOSC	**XTAL2. Main Oscillator/PLL/Clock Generator OUTPUT**
K14	DAPE0	I	FAST / PD2 / VEXT	**DAPE: DAPE0 Clock Input** DAPE: DAPE0 clock input(PD Devices: NC)
L19	$\overline{\text{TRST}}$	I	FAST / PU2 / VEXT	**JTAG Module Reset/Enable Input**
	DAPE0	I		**DAPE: DAPE0 Clock Input**
K16	TMS	I	FAST / PD2 / VEXT	**JTAG Module State Machine Control Input**
	DAP1	I/O		**DAP: DAP1 Data I/O**
J16	TCK	I	FAST / PD2 / VEXT	**JTAG Module Clock Input**
	DAP0	I		**DAP: DAP0 Clock Input**

Downloaded by IFXDMZlpar-zengzhe 12/02/2019 11:04:31

Table 2-42 System I/O (cont'd)

Ball	Symbol	Ctrl.	Buffer Type	Function
G11	DAPE1	I/O	FAST / PD2 / VEXT	**DAPE: DAPE1 Data I/O** DAPE: DAPE1 Data I/O(PD Devices: VSS)
G10	DAPE2	I/O	FAST / PD2 / VEXT	**DAPE: DAPE2 Data I/O** DAPE: DAPE2 Data I/O(PD Devices: VSS)
G16	$\overline{\text{ESR1}}$	I	FAST / PU1 / VEXT	**ESR1 Port Pin input - can be used to trigger a reset or an NMI** ESR1: External System Request Reset 1. Default NMI function. See also SCU chapter for details. Default after power-on can be different. See also SCU chapter ´Reset Control Unit´ and SCU_IOCR register description. PMS_EVRWUP: EVR Wakepup Pin
	PMS_ESR1WKP	I		**ESR1 pin input**
F16	$\overline{\text{ESR0}}$	I	FAST / OD / VEXT	**ESR0 Port Pin input - can be used to trigger a reset or an NMI** ESR0: External System Request Reset 0. Default configuration during and after reset is open-drain driver. The driver drives low during power-on reset. This is valid additionally after deactivation of PORST_N until the internal reset phase has finished. See also SCU chapter for details. Default after power-on can be different. See also SCU chapter ´Reset Control Unit´ and SCU_IOCR register description. PMS_EVRWUP: EVR Wakepup Pin
	PMS_ESR0WKP	I		**ESR0 pin input**
G17	$\overline{\text{PORST}}$	I	PORST / PD / VEXT	**PORST pin input** Power On Reset Input. Additional strong PD in case of power fail.

Table 2-43 Supply

Ball	Symbol	Ctrl.	Buffer Type	Function
P8, P13, N7, N14, E15, H14, D16, G13	VDD	I	—	**Digital Core Power Supply (1.25V)**
A2, B3, V19, W20	VEXT	I	—	**External Power Supply (5V / 3.3V)**
D5	VFLEX	I	—	**Digital Power Supply for Flex Port Pads (5V / 3.3V)**
Y5	VDDM	I	—	**ADC Analog Power Supply (5V / 3.3V)**
B18, A19	VDDP3	I	—	**Flash Power Supply (3.3V)**

Downloaded by IFXDMZ|par-zengzhe 12/02/2019 11:04:31

Table 2-43 Supply (cont'd)

Ball	Symbol	Ctrl.	Buffer Type	Function
B2, D4, E5, T16, U17, W19, Y20, E16, D17, B19, A20	VSS	I	—	**Digital Ground**
Y4	VSSM	I	—	**Analog Ground for VDDM**
P9, P12, N9, N10, N11, N12, M7, M8, M10, M11, M13, M14, L8, L9, L10, L11, L12, L13, K8, K9, K10, K11, K12, K13, J7, J8, J10, J11, J13, J14, H9, H10, H11, H12, G9, G12	VSS	I	—	**Digital Ground**
L20	VSSOSC	I	—	**Oscillator Ground**
Y6	VAREF1	I	—	**Positive Analog Reference Voltage 1**
Y7	VAGND1	I	—	**Negative Analog Reference Voltage 1**
T1	VAREF2	I	—	**Positive Analog Reference Voltage 2**
T2	VAGND2	I	—	**Negative Analog Reference Voltage 2**
A1, Y1, U4	NC1	I	—	**Not connected. These pins are not connected on package level and will not be used for future extensions**
G8, H7	VDDSB (VDD)	I	—	**Devices with integrated EMEM: EMEM SRAM Standby Power Supply, VDDSB (1.25V);Devices without integrated EMEM: VDD (1.25V)**
T11	VEVRSB	I	—	**Standby Power Supply (5V / 3.3V) for the Standby SRAM**
N19	VDDOSC	I	—	**Digital Power Supply for Oscillator (1.25V)**
N20	VEXTOSC	I	—	**Digital Power Supply for Oscillator (shall be supplied with same level as used for VEXT)**

Downloaded by IFXDMZ|par-zengzhe 12/02/2019 11:04:31

2.3 LFBGA-292 ADAS Package Variant Pin Configuration

Table 2-44 Port 00 Functions

Ball	Symbol	Ctrl.	Buffer Type	Function
L2	P00.0	I	FAST / PU1 / VEXT / ES	**General-purpose input**
	GTM_TIM5_IN4_10			**Mux input channel 4 of TIM module 5**
	GTM_TIM3_IN0_1			**Mux input channel 0 of TIM module 3**
	GTM_TIM2_IN0_1			**Mux input channel 0 of TIM module 2**
	CCU61_CTRAPA			**Trap input capture**
	CCU60_T12HRE			**External timer start 12**
	MSC0_INJ0			**Injection signal from port**
	GETH_MDIOA			**MDIO Input**
	P00.0	O0		**General-purpose output**
	GTM_TOUT9	O1		**GTM muxed output**
	IOM_REF0_9			**Reference input 0**
	ASCLIN3_ASCLK	O2		**Shift clock output**
	ASCLIN3_ATX	O3		**Transmit output**
	IOM_MON2_15			**Monitor input 2**
	IOM_REF2_15			**Reference input 2**
	—	O4		**Reserved**
	CAN10_TXD	O5		**CAN transmit output node 0**
	—	O6		**Reserved**
	CCU60_COUT63	O7		**T13 PWM channel 63**
	IOM_MON1_6			**Monitor input 1**
	IOM_REF1_0			**Reference input 1**
	GETH_MDIO	O		**MDIO Output**

Downloaded by IFXDMZ|par-zengzhe 12/02/2019 11:04:31

Table 2-44 Port 00 Functions (cont'd)

Ball	Symbol	Ctrl.	Buffer Type	Function
M2	P00.1	I	SLOW / PU1 / VEXT / ES	**General-purpose input**
	GTM_TIM5_IN5_11			**Mux input channel 5 of TIM module 5**
	GTM_TIM3_IN1_1			**Mux input channel 1 of TIM module 3**
	GTM_TIM2_IN1_1			**Mux input channel 1 of TIM module 2**
	CCU60_CC60INB			**T12 capture input 60**
	ASCLIN3_ARXE			**Receive input**
	EDSADC_DSCIN5A			**Modulator clock input**
	CAN10_RXDA			**CAN receive input node 0**
	PSI5_RX0A			**RXD inputs (receive data) channel 0**
	CCU61_CC60INA			**T12 capture input 60**
	SENT_SENT0B			**Receive input channel 0**
	EDSADC_DSCIN7B			**Modulator clock input**
	EVADC_G9CH11	AI		**Analog input channel 11, group 9**
	EDSADC_EDS5NA			**Negative analog input channel 5, pin A**
	P00.1	O0		**General-purpose output**
	GTM_TOUT10	O1		**GTM muxed output**
	IOM_REF0_10			**Reference input 0**
	ASCLIN3_ATX	O2		**Transmit output**
	IOM_MON2_15			**Monitor input 2**
	IOM_REF2_15			**Reference input 2**
	—	O3		**Reserved**
	EDSADC_DSCOUT5	O4		**Modulator clock output**
	EDSADC_DSCOUT7	O5		**Modulator clock output**
	SENT_SPC0	O6		**Transmit output**
	CCU61_CC60	O7		**T12 PWM channel 60**
	IOM_MON1_8			**Monitor input 1**
	IOM_REF1_13			**Reference input 1**

Downloaded by IFXDMZlpar-zengzhe 12/02/2019 11:04:31

Table 2-44 Port 00 Functions (cont'd)

Ball	Symbol	Ctrl.	Buffer Type	Function
M1	P00.2	I	SLOW / PU1 / VEXT / ES1	**General-purpose input**
	GTM_TIM5_IN6_11			**Mux input channel 6 of TIM module 5**
	GTM_TIM3_IN1_2			**Mux input channel 1 of TIM module 3**
	GTM_TIM2_IN1_2			**Mux input channel 1 of TIM module 2**
	EDSADC_DSDIN7B			**Digital datastream input**
	EDSADC_DSDIN5A			**Digital datastream input**
	SENT_SENT1B			**Receive input channel 1**
	EVADC_G9CH10	AI		**Analog input channel 10, group 9**
	EDSADC_EDS5PA			**Positive analog input channel 5, pin A**
	P00.2	O0		**General-purpose output**
	GTM_TOUT11	O1		**GTM muxed output**
	IOM_REF0_11			**Reference input 0**
	ASCLIN3_ASCLK	O2		**Shift clock output**
	CAN21_TXD	O3		**CAN transmit output node 1**
	PSI5_TX0	O4		**TXD outputs (send data)**
	IOM_MON1_14			**Monitor input 1**
	IOM_REF1_14			**Reference input 1**
	CAN03_TXD	O5		**CAN transmit output node 3**
	IOM_MON2_8			**Monitor input 2**
	IOM_REF2_8			**Reference input 2**
	QSPI3_SLSO4	O6		**Master slave select output**
	CCU61_COUT60	O7		**T12 PWM channel 60**
	IOM_MON1_11			**Monitor input 1**
	IOM_REF1_10			**Reference input 1**

Downloaded by IFXDMZlpar-zengzhe 12/02/2019 11:04:31

Table 2-44 Port 00 Functions (cont'd)

Ball	Symbol	Ctrl.	Buffer Type	Function
M4	P00.3	I	SLOW / PU1 / VEXT / ES1	**General-purpose input**
	GTM_TIM5_IN7_10			**Mux input channel 7 of TIM module 5**
	GTM_TIM3_IN2_1			**Mux input channel 2 of TIM module 3**
	GTM_TIM2_IN2_1			**Mux input channel 2 of TIM module 2**
	CCU60_CC61INB			**T12 capture input 61**
	EDSADC_DSCIN3A			**Modulator clock input**
	EDSADC_ITR5F			**Trigger/Gate input**
	PSI5_RX1A			**RXD inputs (receive data) channel 1**
	CAN03_RXDA			**CAN receive input node 3**
	CAN21_RXDA			**CAN receive input node 1**
	PSI5S_RXA			**RX data input**
	SENT_SENT2B			**Receive input channel 2**
	CCU61_CC61INA			**T12 capture input 61**
	EVADC_G9CH9	AI		**Analog input channel 9, group 9**
	EDSADC_EDS5NB			**Negative analog input channel 5, pin B**
	P00.3	O0		**General-purpose output**
	GTM_TOUT12	O1		**GTM muxed output**
	IOM_REF0_12			**Reference input 0**
	ASCLIN3_ASLSO	O2		**Slave select signal output**
	—	O3		**Reserved**
	EDSADC_DSCOUT3	O4		**Modulator clock output**
	—	O5		**Reserved**
	SENT_SPC2	O6		**Transmit output**
	CCU61_CC61	O7		**T12 PWM channel 61**
	IOM_MON1_9			**Monitor input 1**
	IOM_REF1_12			**Reference input 1**

Downloaded by IFXDMZlpar-zengzhe 12/02/2019 11:04:31

Table 2-44 Port 00 Functions (cont'd)

Ball	Symbol	Ctrl.	Buffer Type	Function
M5	P00.4	I	SLOW / PU1 / VEXT / ES1	**General-purpose input**
	GTM_TIM6_IN4_1			**Mux input channel 4 of TIM module 6**
	GTM_TIM3_IN3_1			**Mux input channel 3 of TIM module 3**
	GTM_TIM2_IN3_1			**Mux input channel 3 of TIM module 2**
	SCU_E_REQ2_2			**ERU Channel 2 inputs 0 to 5 (0 is the LSB and 5 is the MSB)**
	SENT_SENT3B			**Receive input channel 3**
	EDSADC_DSDIN3A			**Digital datastream input**
	EDSADC_SGNA			**Carrier sign signal input**
	ASCLIN10_ARXA			**Receive input**
	GTM_DTMA5_0			**CDTM5_DTM4**
	GTM_DTMT3_0			**CDTM3_DTM0**
	EVADC_G9CH8	AI		**Analog input channel 8, group 9**
	EDSADC_EDS5PB			**Positive analog input channel 5, pin B**
	P00.4	O0		**General-purpose output**
	GTM_TOUT13	O1		**GTM muxed output**
	IOM_REF0_13			**Reference input 0**
	PSI5S_TX	O2		**TX data output**
	CAN11_TXD	O3		**CAN transmit output node 1**
	PSI5_TX1	O4		**TXD outputs (send data)**
	IOM_MON1_15			**Monitor input 1**
	EVADC_FC4BFLOUT	O5		**Boundary flag output, FC channel 4**
	SENT_SPC3	O6		**Transmit output**
	CCU61_COUT61	O7		**T12 PWM channel 61**
	IOM_MON1_12			**Monitor input 1**
	IOM_REF1_9			**Reference input 1**

Downloaded by IFXDMZlpar-zengzhe 12/02/2019 11:04:31

Table 2-44 Port 00 Functions (cont'd)

Ball	Symbol	Ctrl.	Buffer Type	Function
N5	P00.5	I	SLOW / PU1 / VEXT / ES1	**General-purpose input**
	GTM_TIM3_IN4_1			**Mux input channel 4 of TIM module 3**
	GTM_TIM3_IN0_11			**Mux input channel 0 of TIM module 3**
	GTM_TIM2_IN4_1			**Mux input channel 4 of TIM module 2**
	CCU60_CC62INB			**T12 capture input 62**
	EDSADC_DSCIN2A			**Modulator clock input**
	PSI5_RX2A			**RXD inputs (receive data) channel 2**
	CCU61_CC62INA			**T12 capture input 62**
	SENT_SENT4B			**Receive input channel 4**
	CAN11_RXDB			**CAN receive input node 1**
	GTM_DTMT1_1			**CDTM1_DTM0**
	GTM_DTMT4_2			**CDTM4_DTM0**
	EVADC_G9CH7	AI		**Analog input channel 7, group 9**
	P00.5	O0		**General-purpose output**
	GTM_TOUT14	O1		**GTM muxed output**
	IOM_REF0_14			**Reference input 0**
	EDSADC_CGPWMN	O2		**Negative carrier generator output**
	QSPI3_SLSO3	O3		**Master slave select output**
	EDSADC_DSCOUT2	O4		**Modulator clock output**
	EVADC_FC0BFLOUT	O5		**Boundary flag output, FC channel 0**
	SENT_SPC4	O6		**Transmit output**
	CCU61_CC62	O7		**T12 PWM channel 62**
	IOM_MON1_10			**Monitor input 1**
	IOM_REF1_11			**Reference input 1**

Downloaded by IFXDMZlpar-zengzhe 12/02/2019 11:04:31

Table 2-44 Port 00 Functions (cont'd)

Ball	Symbol	Ctrl.	Buffer Type	Function
N4	P00.6	I	SLOW / PU1 / VEXT / ES1	**General-purpose input**
	GTM_TIM3_IN5_1			**Mux input channel 5 of TIM module 3**
	GTM_TIM3_IN1_14			**Mux input channel 1 of TIM module 3**
	GTM_TIM2_IN5_1			**Mux input channel 5 of TIM module 2**
	EDSADC_ITR4F			**Trigger/Gate input**
	EDSADC_DSDIN2A			**Digital datastream input**
	SENT_SENT5B			**Receive input channel 5**
	ASCLIN5_ARXA			**Receive input**
	GTM_DTMA6_0			**CDTM6_DTM4**
	GTM_DTMT3_1			**CDTM3_DTM0**
	EVADC_G9CH6	AI		**Analog input channel 6, group 9**
	P00.6	O0		**General-purpose output**
	GTM_TOUT15	O1		**GTM muxed output**
	IOM_REF0_15			**Reference input 0**
	EDSADC_CGPWMP	O2		**Positive carrier generator output**
	EVADC_FC5BFLOUT	O3		**Boundary flag output, FC channel 5**
	PSI5_TX2	O4		**TXD outputs (send data)**
	IOM_REF1_15			**Reference input 1**
	EVADC_EMUX10	O5		**Control of external analog multiplexer interface 1**
	SENT_SPC5	O6		**Transmit output**
	CCU61_COUT62	O7		**T12 PWM channel 62**
	IOM_MON1_13			**Monitor input 1**
	IOM_REF1_8			**Reference input 1**

Downloaded by IFXDMZlpar-zengzhe 12/02/2019 11:04:31

Table 2-44 Port 00 Functions (cont'd)

Ball	Symbol	Ctrl.	Buffer Type	Function
N2	P00.7	I	SLOW / PU1 / VEXT / ES1	**General-purpose input**
	GTM_TIM3_IN6_1			**Mux input channel 6 of TIM module 3**
	GTM_TIM3_IN2_11			**Mux input channel 2 of TIM module 3**
	GTM_TIM2_IN6_1			**Mux input channel 6 of TIM module 2**
	CCU61_CC60INC			**T12 capture input 60**
	SENT_SENT6B			**Receive input channel 6**
	EDSADC_DSCIN4A			**Modulator clock input**
	GPT120_T2INA			**Trigger/gate input of timer T2**
	CCU61_CCPOS0A			**Hall capture input 0**
	CCU60_T12HRB			**External timer start 12**
	GTM_DTMT0_2			**CDTM0_DTM0**
	EVADC_G9CH5	AI		**Analog input channel 5, group 9**
	EDSADC_EDS4NA			**Negative analog input channel 4, pin A**
	P00.7	O0		**General-purpose output**
	GTM_TOUT16	O1		**GTM muxed output**
	ASCLIN5_ATX	O2		**Transmit output**
	EVADC_FC2BFLOUT	O3		**Boundary flag output, FC channel 2**
	EDSADC_DSCOUT4	O4		**Modulator clock output**
	EVADC_EMUX11	O5		**Control of external analog multiplexer interface 1**
	SENT_SPC6	O6		**Transmit output**
	CCU61_CC60	O7		**T12 PWM channel 60**
	IOM_MON1_8			**Monitor input 1**
	IOM_REF1_13			**Reference input 1**

Downloaded by IFXDMZlpar-zengzhe 12/02/2019 11:04:31

Table 2-44 Port 00 Functions (cont'd)

Ball	Symbol	Ctrl.	Buffer Type	Function
N1	P00.8	I	SLOW / PU1 / VEXT / ES1	**General-purpose input**
	GTM_TIM3_IN7_1			**Mux input channel 7 of TIM module 3**
	GTM_TIM3_IN3_11			**Mux input channel 3 of TIM module 3**
	GTM_TIM2_IN7_1			**Mux input channel 7 of TIM module 2**
	CCU61_CC61INC			**T12 capture input 61**
	SENT_SENT7B			**Receive input channel 7**
	EDSADC_DSDIN4A			**Digital datastream input**
	GPT120_T2EUDA			**Count direction control input of timer T2**
	CCU61_CCPOS1A			**Hall capture input 1**
	CCU60_T13HRB			**External timer start 13**
	ASCLIN10_ARXB			**Receive input**
	EVADC_G9CH4	AI		**Analog input channel 4, group 9**
	EDSADC_EDS4PA			**Positive analog input channel 4, pin A**
	P00.8	O0		**General-purpose output**
	GTM_TOUT17	O1		**GTM muxed output**
	QSPI3_SLSO6	O2		**Master slave select output**
	ASCLIN10_ATX	O3		**Transmit output**
	—	O4		**Reserved**
	EVADC_EMUX12	O5		**Control of external analog multiplexer interface 1**
	SENT_SPC7	O6		**Transmit output**
	CCU61_CC61	O7		**T12 PWM channel 61**
	IOM_MON1_9			**Monitor input 1**
	IOM_REF1_12			**Reference input 1**

Downloaded by IFXDMZlpar-zengzhe 12/02/2019 11:04:31

Table 2-44 Port 00 Functions (cont'd)

Ball	Symbol	Ctrl.	Buffer Type	Function
P2	P00.9	I	SLOW / PU1 / VEXT / ES1	**General-purpose input**
	GTM_TIM4_IN0_7			**Mux input channel 0 of TIM module 4**
	GTM_TIM1_IN0_1			**Mux input channel 0 of TIM module 1**
	GTM_TIM0_IN0_1			**Mux input channel 0 of TIM module 0**
	CCU61_CC62INC			**T12 capture input 62**
	SENT_SENT8B			**Receive input channel 8**
	CCU61_CCPOS2A			**Hall capture input 2**
	EDSADC_DSCIN1A			**Modulator clock input**
	EDSADC_ITR3F			**Trigger/Gate input**
	GPT120_T4EUDA			**Count direction control input of timer T4**
	CCU60_T13HRC			**External timer start 13**
	CCU60_T12HRC			**External timer start 12**
	EVADC_G9CH3	AI		**Analog input channel 3, group 9**
	EDSADC_EDS4NB			**Negative analog input channel 4, pin B**
	P00.9	O0		**General-purpose output**
	GTM_TOUT18	O1		**GTM muxed output**
	QSPI3_SLSO7	O2		**Master slave select output**
	ASCLIN3_ARTS	O3		**Ready to send output**
	EDSADC_DSCOUT1	O4		**Modulator clock output**
	ASCLIN4_ATX	O5		**Transmit output**
	SENT_SPC8	O6		**Transmit output**
	CCU61_CC62	O7		**T12 PWM channel 62**
	IOM_MON1_10			**Monitor input 1**
	IOM_REF1_11			**Reference input 1**

Downloaded by IFXDMZ|par-zengzhe 12/02/2019 11:04:31

Table 2-44 Port 00 Functions (cont'd)

Ball	Symbol	Ctrl.	Buffer Type	Function
P1	P00.10	I	SLOW / PU1 / VEXT / ES1	**General-purpose input**
	GTM_TIM4_IN1_11			**Mux input channel 1 of TIM module 4**
	GTM_TIM1_IN1_1			**Mux input channel 1 of TIM module 1**
	GTM_TIM0_IN1_1			**Mux input channel 1 of TIM module 0**
	SENT_SENT9B			**Receive input channel 9**
	EDSADC_DSDIN1A			**Digital datastream input**
	EVADC_G9CH2	AI		**Analog input channel 2, group 9**
	EDSADC_EDS4PB			**Positive analog input channel 4, pin B**
	P00.10	O0		**General-purpose output**
	GTM_TOUT19	O1		**GTM muxed output**
	ASCLIN4_ASCLK	O2		**Shift clock output**
	—	O3		**Reserved**
	—	O4		**Reserved**
	—	O5		**Reserved**
	SENT_SPC9	O6		**Transmit output**
	CCU61_COUT63	O7		**T13 PWM channel 63**
	IOM_MON1_7			**Monitor input 1**
	IOM_REF1_7			**Reference input 1**
R1	P00.11	I	SLOW / PU1 / VEXT / ES1	**General-purpose input**
	GTM_TIM4_IN2_11			**Mux input channel 2 of TIM module 4**
	GTM_TIM1_IN2_1			**Mux input channel 2 of TIM module 1**
	GTM_TIM0_IN2_1			**Mux input channel 2 of TIM module 0**
	CCU60_CTRAPA			**Trap input capture**
	EDSADC_DSCIN0A			**Modulator clock input**
	CCU61_T12HRE			**External timer start 12**
	SENT_SENT10B			**Receive input channel 10**
	EVADC_G9CH1	AI		**Analog input channel 1, group 9**
	EVADC_FC3CH0			**Analog input FC channel 3**
	P00.11	O0		**General-purpose output**
	GTM_TOUT20	O1		**GTM muxed output**
	ASCLIN4_ASLSO	O2		**Slave select signal output**
	—	O3		**Reserved**
	EDSADC_DSCOUT0	O4		**Modulator clock output**
	—	O5		**Reserved**
	—	O6		**Reserved**
	—	O7		**Reserved**

Downloaded by IFXDMZlpar-zengzhe 12/02/2019 11:04:31

Table 2-44 Port 00 Functions (cont'd)

Ball	Symbol	Ctrl.	Buffer Type	Function
R2	P00.12	I	SLOW / PU1 / VEXT / ES1	**General-purpose input**
	GTM_TIM4_IN3_11			**Mux input channel 3 of TIM module 4**
	GTM_TIM1_IN3_1			**Mux input channel 3 of TIM module 1**
	GTM_TIM0_IN3_1			**Mux input channel 3 of TIM module 0**
	ASCLIN3_ACTSA			**Clear to send input**
	EDSADC_DSDIN0A			**Digital datastream input**
	ASCLIN4_ARXA			**Receive input**
	SENT_SENT11B			**Receive input channel 11**
	EVADC_G9CH0	AI		**Analog input channel 0, group 9**
	EVADC_FC2CH0			**Analog input FC channel 2**
	P00.12	O0		**General-purpose output**
	GTM_TOUT21	O1		**GTM muxed output**
	—	O2		**Reserved**
	—	O3		**Reserved**
	—	O4		**Reserved**
	—	O5		**Reserved**
	—	O6		**Reserved**
	CCU61_COUT63	O7		**T13 PWM channel 63**
	IOM_MON1_7			**Monitor input 1**
	IOM_REF1_7			**Reference input 1**

Downloaded by IFXDMZ|par-zengzhe 12/02/2019 11:04:31

Table 2-45 Port 02 Functions

Ball	Symbol	Ctrl.	Buffer Type	Function
J1	P02.0	I	FAST / PU1 / VEXT / ES	**General-purpose input**
	GTM_TIM1_IN0_2			**Mux input channel 0 of TIM module 1**
	GTM_TIM0_IN0_2			**Mux input channel 0 of TIM module 0**
	CCU61_CC60INB			**T12 capture input 60**
	ASCLIN2_ARXG			**Receive input**
	CCU60_CC60INA			**T12 capture input 60**
	SCU_E_REQ3_2			**ERU Channel 3 inputs 0 to 5 (0 is the LSB and 5 is the MSB)**
	GTM_DTMA0_0			**CDTM0_DTM4**
	P02.0	O0		**General-purpose output**
	GTM_TOUT0	O1		**GTM muxed output**
	IOM_REF0_0			**Reference input 0**
	ASCLIN2_ATX	O2		**Transmit output**
	IOM_MON2_14			**Monitor input 2**
	IOM_REF2_14			**Reference input 2**
	QSPI3_SLSO1	O3		**Master slave select output**
	EDSADC_CGPWMN	O4		**Negative carrier generator output**
	CAN00_TXD	O5		**CAN transmit output node 0**
	IOM_MON2_5			**Monitor input 2**
	IOM_REF2_5			**Reference input 2**
	ERAY0_TXDA	O6		**Transmit Channel A**
	CCU60_CC60	O7		**T12 PWM channel 60**
	IOM_MON1_2			**Monitor input 1**
	IOM_REF1_6			**Reference input 1**

Downloaded by IFXDMZlpar-zengzhe 12/02/2019 11:04:31

Table 2-45 Port 02 Functions (cont'd)

Ball	Symbol	Ctrl.	Buffer Type	Function
J2	P02.1	I	SLOW / PU1 / VEXT / ES	**General-purpose input**
	GTM_TIM1_IN1_2			**Mux input channel 1 of TIM module 1**
	GTM_TIM0_IN1_2			**Mux input channel 1 of TIM module 0**
	ERAY0_RXDA2			**Receive Channel A2**
	ASCLIN2_ARXB			**Receive input**
	CAN00_RXDA			**CAN receive input node 0**
	SCU_E_REQ2_1			**ERU Channel 2 inputs 0 to 5 (0 is the LSB and 5 is the MSB)**
	P02.1	O0		**General-purpose output**
	GTM_TOUT1	O1		**GTM muxed output**
	IOM_REF0_1			**Reference input 0**
	QSPI4_SLSO7	O2		**Master slave select output**
	QSPI3_SLSO2	O3		**Master slave select output**
	EDSADC_CGPWMP	O4		**Positive carrier generator output**
	—	O5		**Reserved**
	—	O6		**Reserved**
	CCU60_COUT60	O7		**T12 PWM channel 60**
	IOM_MON1_3			**Monitor input 1**
	IOM_REF1_3			**Reference input 1**

Downloaded by IFXDMZlpar-zengzhe 12/02/2019 11:04:31

Table 2-45 Port 02 Functions (cont'd)

Ball	Symbol	Ctrl.	Buffer Type	Function
K1	P02.2	I	FAST / PU1 / VEXT / ES	**General-purpose input**
	GTM_TIM1_IN2_2			**Mux input channel 2 of TIM module 1**
	GTM_TIM0_IN2_2			**Mux input channel 2 of TIM module 0**
	CCU61_CC61INB			**T12 capture input 61**
	CCU60_CC61INA			**T12 capture input 61**
	SENT_SENT14B			**Receive input channel 14**
	P02.2	O0		**General-purpose output**
	GTM_TOUT2	O1		**GTM muxed output**
	IOM_REF0_2			**Reference input 0**
	ASCLIN1_ATX	O2		**Transmit output**
	IOM_MON2_13			**Monitor input 2**
	IOM_REF2_13			**Reference input 2**
	QSPI3_SLSO3	O3		**Master slave select output**
	PSI5_TX0	O4		**TXD outputs (send data)**
	IOM_MON1_14			**Monitor input 1**
	IOM_REF1_14			**Reference input 1**
	CAN02_TXD	O5		**CAN transmit output node 2**
	IOM_MON2_7			**Monitor input 2**
	IOM_REF2_7			**Reference input 2**
	ERAY0_TXDB	O6		**Transmit Channel B**
	CCU60_CC61	O7		**T12 PWM channel 61**
	IOM_MON1_1			**Monitor input 1**
	IOM_REF1_5			**Reference input 1**

Downloaded by IFXDMZ|par-zengzhe 12/02/2019 11:04:31

Table 2-45 Port 02 Functions (cont'd)

Ball	Symbol	Ctrl.	Buffer Type	Function
K2	P02.3	I	SLOW / PU1 / VEXT / ES	**General-purpose input**
	GTM_TIM1_IN3_2			**Mux input channel 3 of TIM module 1**
	GTM_TIM0_IN3_2			**Mux input channel 3 of TIM module 0**
	EDSADC_DSCIN5B			**Modulator clock input**
	ERAY0_RXDB2			**Receive Channel B2**
	CAN02_RXDB			**CAN receive input node 2**
	ASCLIN1_ARXG			**Receive input**
	MSC1_SDI1			**Upstream assynchronous input signal**
	PSI5_RX0B			**RXD inputs (receive data) channel 0**
	SENT_SENT13B			**Receive input channel 13**
	P02.3	O0		**General-purpose output**
	GTM_TOUT3	O1		**GTM muxed output**
	IOM_REF0_3			**Reference input 0**
	ASCLIN2_ASLSO	O2		**Slave select signal output**
	QSPI3_SLSO4	O3		**Master slave select output**
	EDSADC_DSCOUT5	O4		**Modulator clock output**
	—	O5		**Reserved**
	—	O6		**Reserved**
	CCU60_COUT61	O7		**T12 PWM channel 61**
	IOM_MON1_4			**Monitor input 1**
	IOM_REF1_2			**Reference input 1**

Downloaded by IFXDMZ|par-zengzhe 12/02/2019 11:04:31

Table 2-45 Port 02 Functions (cont'd)

Ball	Symbol	Ctrl.	Buffer Type	Function
K4	P02.4	I	FAST / PU1 / VEXT / ES	**General-purpose input**
	GTM_TIM1_IN4_1			**Mux input channel 4 of TIM module 1**
	GTM_TIM0_IN4_1			**Mux input channel 4 of TIM module 0**
	CCU61_CC62INB			**T12 capture input 62**
	EDSADC_DSDIN5B			**Digital datastream input**
	QSPI3_SLSIA			**Slave select input**
	CCU60_CC62INA			**T12 capture input 62**
	I2C0_SDAA			**Serial Data Input**
	CAN11_RXDA			**CAN receive input node 1**
	CAN0_ECTT1			**External CAN time trigger input**
	SENT_SENT12B			**Receive input channel 12**
	P02.4	O0		**General-purpose output**
	GTM_TOUT4	O1		**GTM muxed output**
	IOM_REF0_4			**Reference input 0**
	ASCLIN2_ASCLK	O2		**Shift clock output**
	QSPI3_SLSO0	O3		**Master slave select output**
	PSI5S_CLK	O4		**PSISCLK is a clock that can be used on a pin to drive the external PHY.**
	I2C0_SDA	O5		**Serial Data Output**
	ERAY0_TXENA	O6		**Transmit Enable Channel A**
	CCU60_CC62	O7		**T12 PWM channel 62**
	IOM_MON1_0			**Monitor input 1**
	IOM_REF1_4			**Reference input 1**

Downloaded by IFXDMZlpar-zengzhe 12/02/2019 11:04:31

Table 2-45 Port 02 Functions (cont'd)

Ball	Symbol	Ctrl.	Buffer Type	Function
K5	P02.5	I	FAST / PU1 / VEXT / ES	**General-purpose input**
	GTM_TIM1_IN5_1			**Mux input channel 5 of TIM module 1**
	GTM_TIM0_IN5_1			**Mux input channel 5 of TIM module 0**
	EDSADC_DSCIN4B			**Modulator clock input**
	I2C0_SCLA			**Serial Clock Input**
	PSI5_RX1B			**RXD inputs (receive data) channel 1**
	PSI5S_RXB			**RX data input**
	QSPI3_MRSTA			**Master SPI data input**
	SENT_SENT3C			**Receive input channel 3**
	CAN0_ECTT2			**External CAN time trigger input**
	P02.5	O0		**General-purpose output**
	GTM_TOUT5	O1		**GTM muxed output**
	IOM_REF0_5			**Reference input 0**
	CAN11_TXD	O2		**CAN transmit output node 1**
	QSPI3_MRST	O3		**Slave SPI data output**
	IOM_MON2_3			**Monitor input 2**
	IOM_REF2_3			**Reference input 2**
	EDSADC_DSCOUT4	O4		**Modulator clock output**
	I2C0_SCL	O5		**Serial Clock Output**
	ERAY0_TXENB	O6		**Transmit Enable Channel B**
	CCU60_COUT62	O7		**T12 PWM channel 62**
	IOM_MON1_5			**Monitor input 1**
	IOM_REF1_1			**Reference input 1**

Downloaded by IFXDMZlpar-zengzhe 12/02/2019 11:04:31

Table 2-45 Port 02 Functions (cont'd)

Ball	Symbol	Ctrl.	Buffer Type	Function
L1	P02.6	I	FAST / PU1 / VEXT / ES	**General-purpose input**
	GTM_TIM3_IN0_10			**Mux input channel 0 of TIM module 3**
	GTM_TIM1_IN6_1			**Mux input channel 6 of TIM module 1**
	GTM_TIM0_IN6_1			**Mux input channel 6 of TIM module 0**
	CCU60_CC60INC			**T12 capture input 60**
	SENT_SENT2C			**Receive input channel 2**
	EDSADC_DSDIN4B			**Digital datastream input**
	EDSADC_ITR5E			**Trigger/Gate input**
	GPT120_T3INA			**Trigger/gate input of core timer T3**
	CCU60_CCPOS0A			**Hall capture input 0**
	CCU61_T12HRB			**External timer start 12**
	QSPI3_MTSRA			**Save SPI data input**
	RIF0_RAMP1B			**External RAMP B input**
	P02.6	O0		**General-purpose output**
	GTM_TOUT6	O1		**GTM muxed output**
	IOM_REF0_6			**Reference input 0**
	PSI5S_TX	O2		**TX data output**
	QSPI3_MTSR	O3		**Master SPI data output**
	PSI5_TX1	O4		**TXD outputs (send data)**
	IOM_MON1_15			**Monitor input 1**
	EVADC_EMUX00	O5		**Control of external analog multiplexer interface 0**
	—	O6		**Reserved**
	CCU60_CC60	O7		**T12 PWM channel 60**
	IOM_MON1_2			**Monitor input 1**
	IOM_REF1_6			**Reference input 1**

Downloaded by IFXDMZlpar-zengzhe 12/02/2019 11:04:31

Table 2-45 Port 02 Functions (cont'd)

Ball	Symbol	Ctrl.	Buffer Type	Function
L4	P02.7	I	FAST / PU1 / VEXT / ES	**General-purpose input**
	GTM_TIM3_IN1_10			**Mux input channel 1 of TIM module 3**
	GTM_TIM1_IN7_1			**Mux input channel 7 of TIM module 1**
	GTM_TIM0_IN7_1			**Mux input channel 0 of TIM module 0**
	CCU60_CC61INC			**T12 capture input 61**
	SENT_SENT1C			**Receive input channel 1**
	EDSADC_DSCIN3B			**Modulator clock input**
	EDSADC_ITR4E			**Trigger/Gate input**
	GPT120_T3EUDA			**Count direction control input of core timer T3**
	PSI5_RX2B			**RXD inputs (receive data) channel 2**
	CCU60_CCPOS1A			**Hall capture input 1**
	QSPI3_SCLKA			**Slave SPI clock inputs**
	CCU61_T13HRB			**External timer start 13**
	P02.7	O0		**General-purpose output**
	GTM_TOUT7	O1		**GTM muxed output**
	IOM_REF0_7			**Reference input 0**
	—	O2		**Reserved**
	QSPI3_SCLK	O3		**Master SPI clock output**
	EDSADC_DSCOUT3	O4		**Modulator clock output**
	EVADC_EMUX01	O5		**Control of external analog multiplexer interface 0**
	SENT_SPC1	O6		**Transmit output**
	CCU60_CC61	O7		**T12 PWM channel 61**
	IOM_MON1_1			**Monitor input 1**
	IOM_REF1_5			**Reference input 1**

Downloaded by IFXDMZ|par-zengzhe 12/02/2019 11:04:31

Table 2-45 Port 02 Functions (cont'd)

Ball	Symbol	Ctrl.	Buffer Type	Function
L5	P02.8	I	SLOW / PU1 / VEXT / ES	**General-purpose input**
	GTM_TIM3_IN2_10			**Mux input channel 2 of TIM module 3**
	GTM_TIM3_IN0_2			**Mux input channel 0 of TIM module 3**
	GTM_TIM2_IN0_2			**Mux input channel 0 of TIM module 2**
	CCU60_CC62INC			**T12 capture input 62**
	SENT_SENT0C			**Receive input channel 0**
	CCU60_CCPOS2A			**Hall capture input 2**
	EDSADC_DSDIN3B			**Digital datastream input**
	EDSADC_ITR3E			**Trigger/Gate input**
	GPT120_T4INA			**Trigger/gate input of timer T4**
	CCU61_T12HRC			**External timer start 12**
	CCU61_T13HRC			**External timer start 13**
	GTM_DTMA0_1			**CDTM0_DTM4**
	PMS_PMS_TESTGND_PAD	AI		**Analog GND out for direct connection to GPIO**
	P02.8	O0		**General-purpose output**
	GTM_TOUT8	O1		**GTM muxed output**
	IOM_REF0_8			**Reference input 0**
	QSPI3_SLSO5	O2		**Master slave select output**
	ASCLIN8_ASCLK	O3		**Shift clock output**
	PSI5_TX2	O4		**TXD outputs (send data)**
	IOM_REF1_15			**Reference input 1**
	EVADC_EMUX02	O5		**Control of external analog multiplexer interface 0**
	GETH_MDC	O6		**MDIO clock**
	CCU60_CC62	O7		**T12 PWM channel 62**
	IOM_MON1_0			**Monitor input 1**
	IOM_REF1_4			**Reference input 1**

Downloaded by IFXDMZlpar-zengzhe 12/02/2019 11:04:31

Table 2-46 Port 10 Functions

Ball	Symbol	Ctrl.	Buffer Type	Function
E4	P10.0	I	SLOW / PU1 / VEXT / ES	**General-purpose input**
	GTM_TIM4_IN0_12			**Mux input channel 0 of TIM module 4**
	GTM_TIM1_IN4_2			**Mux input channel 4 of TIM module 1**
	GTM_TIM0_IN4_2			**Mux input channel 4 of TIM module 0**
	GPT120_T6EUDB			**Count direction control input of core timer T6**
	ASCLIN11_ARXA			**Receive input**
	GETH_RXERC			**Receive Error MII**
	GTM_DTMA5_2			**CDTM5_DTM4**
	P10.0	O0		**General-purpose output**
	GTM_TOUT102	O1		**GTM muxed output**
	ASCLIN11_ATX	O2		**Transmit output**
	QSPI1_SLSO10	O3		**Master slave select output**
	—	O4		**Reserved**
	EVADC_FC6BFLOUT	O5		**Boundary flag output, FC channel 6**
	—	O6		**Reserved**
	—	O7		**Reserved**
F4	P10.1	I	FAST / PU1 / VEXT / ES	**General-purpose input**
	GTM_TIM4_IN4_12			**Mux input channel 4 of TIM module 4**
	GTM_TIM1_IN1_3			**Mux input channel 1 of TIM module 1**
	GTM_TIM0_IN1_3			**Mux input channel 1 of TIM module 0**
	GPT120_T5EUDB			**Count direction control input of timer T5**
	QSPI1_MRSTA			**Master SPI data input**
	GTM_DTMT0_1			**CDTM0_DTM0**
	P10.1	O0		**General-purpose output**
	GTM_TOUT103	O1		**GTM muxed output**
	QSPI1_MTSR	O2		**Master SPI data output**
	QSPI1_MRST	O3		**Slave SPI data output**
	IOM_MON2_1			**Monitor input 2**
	IOM_REF2_1			**Reference input 2**
	MSC0_EN1	O4		**Chip Select**
	EVADC_FC1BFLOUT	O5		**Boundary flag output, FC channel 1**
	—	O6		**Reserved**
	—	O7		**Reserved**

Downloaded by IFXDMZlpar-zengzhe 12/02/2019 11:04:31

Table 2-46 Port 10 Functions (cont'd)

Ball	Symbol	Ctrl.	Buffer Type	Function
F5	P10.2	I	FAST / PU1 / VEXT / ES	**General-purpose input**
	GTM_TIM4_IN5_12			**Mux input channel 5 of TIM module 4**
	GTM_TIM1_IN2_3			**Mux input channel 2 of TIM module 1**
	GTM_TIM0_IN2_3			**Mux input channel 2 of TIM module 0**
	CAN02_RXDE			**CAN receive input node 2**
	MSC0_SDI1			**Upstream assynchronous input signal**
	QSPI1_SCLKA			**Slave SPI clock inputs**
	GPT120_T6INB			**Trigger/gate input of core timer T6**
	SCU_E_REQ2_0			**ERU Channel 2 inputs 0 to 5 (0 is the LSB and 5 is the MSB)**
	GTM_DTMT2_2			**CDTM2_DTM0**
	P10.2	O0		**General-purpose output**
	GTM_TOUT104	O1		**GTM muxed output**
	IOM_MON2_9			**Monitor input 2**
	—	O2		**Reserved**
	QSPI1_SCLK	O3		**Master SPI clock output**
	MSC0_EN0	O4		**Chip Select**
	EVADC_FC3BFLOUT	O5		**Boundary flag output, FC channel 3**
	—	O6		**Reserved**
	—	O7		**Reserved**

Downloaded by IFXDMZlpar-zengzhe 12/02/2019 11:04:31

Table 2-46 Port 10 Functions (cont'd)

Ball	Symbol	Ctrl.	Buffer Type	Function
G4	P10.3	I	FAST / PU1 / VEXT / ES	**General-purpose input**
	GTM_TIM4_IN6_10			**Mux input channel 6 of TIM module 4**
	GTM_TIM1_IN3_3			**Mux input channel 3 of TIM module 1**
	GTM_TIM0_IN3_3			**Mux input channel 3 of TIM module 0**
	QSPI1_MTSRA			**Save SPI data input**
	SCU_E_REQ3_0			**ERU Channel 3 inputs 0 to 5 (0 is the LSB and 5 is the MSB)**
	GPT120_T5INB			**Trigger/gate input of timer T5**
	P10.3	O0		**General-purpose output**
	GTM_TOUT105	O1		**GTM muxed output**
	IOM_MON2_10			**Monitor input 2**
	—	O2		**Reserved**
	QSPI1_MTSR	O3		**Master SPI data output**
	MSC0_EN0	O4		**Chip Select**
	—	O5		**Reserved**
	CAN02_TXD	O6		**CAN transmit output node 2**
	IOM_MON2_7			**Monitor input 2**
	IOM_REF2_7			**Reference input 2**
	—	O7		**Reserved**
G5	P10.4	I	FAST / PU1 / VEXT / ES	**General-purpose input**
	GTM_TIM4_IN7_3			**Mux input channel 7 of TIM module 4**
	GTM_TIM1_IN6_2			**Mux input channel 6 of TIM module 1**
	GTM_TIM0_IN6_2			**Mux input channel 6 of TIM module 0**
	QSPI1_MTSRC			**Save SPI data input**
	CCU60_CCPOS0C			**Hall capture input 0**
	GPT120_T3INB			**Trigger/gate input of core timer T3**
	ASCLIN11_ARXB			**Receive input**
	P10.4	O0		**General-purpose output**
	GTM_TOUT106	O1		**GTM muxed output**
	IOM_MON2_11			**Monitor input 2**
	—	O2		**Reserved**
	QSPI1_SLSO8	O3		**Master slave select output**
	QSPI1_MTSR	O4		**Master SPI data output**
	MSC0_EN0	O5		**Chip Select**
	—	O6		**Reserved**
	—	O7		**Reserved**

Downloaded by IFXDMZ|par-zengzhe 12/02/2019 11:04:31

Table 2-46 Port 10 Functions (cont'd)

Ball	Symbol	Ctrl.	Buffer Type	Function
H4	P10.5	I	SLOW / PU2 / VEXT / ES	**General-purpose input**
	GTM_TIM4_IN3_13			**Mux input channel 3 of TIM module 4**
	GTM_TIM1_IN2_4			**Mux input channel 2 of TIM module 1**
	GTM_TIM0_IN2_4			**Mux input channel 2 of TIM module 0**
	SCU_PD_HWCFG4			**Hardware configuration pin 4**
	CAN20_RXDA			**CAN receive input node 0**
	MSC0_INJ1			**Injection signal from port**
	P10.5	O0		**General-purpose output**
	GTM_TOUT107	O1		**GTM muxed output**
	IOM_REF2_9			**Reference input 2**
	ASCLIN2_ATX	O2		**Transmit output**
	IOM_MON2_14			**Monitor input 2**
	IOM_REF2_14			**Reference input 2**
	QSPI3_SLSO8	O3		**Master slave select output**
	QSPI1_SLSO9	O4		**Master slave select output**
	GPT120_T6OUT	O5		**External output for overflow/underflow detection of core timer T6**
	ASCLIN2_ASLSO	O6		**Slave select signal output**
	PSI5_TX3	O7		**TXD outputs (send data)**

Downloaded by IFXDMZ|par-zengzhe 12/02/2019 11:04:31

Table 2-46 Port 10 Functions (cont'd)

Ball	Symbol	Ctrl.	Buffer Type	Function
H5	P10.6	I	SLOW / PU2 / VEXT / ES	**General-purpose input**
	GTM_TIM4_IN2_13			**Mux input channel 2 of TIM module 4**
	GTM_TIM1_IN3_4			**Mux input channel 3 of TIM module 1**
	GTM_TIM0_IN3_4			**Mux input channel 3 of TIM module 0**
	PSI5_RX3C			**RXD inputs (receive data) channel 3**
	ASCLIN2_ARXD			**Receive input**
	QSPI3_MTSRB			**Save SPI data input**
	SCU_PD_HWCFG5			**Hardware configuration pin 5**
	P10.6	O0		**General-purpose output**
	GTM_TOUT108	O1		**GTM muxed output**
	IOM_REF2_10			**Reference input 2**
	ASCLIN2_ASCLK	O2		**Shift clock output**
	QSPI3_MTSR	O3		**Master SPI data output**
	GPT120_T3OUT	O4		**External output for overflow/underflow detection of core timer T3**
	CAN20_TXD	O5		**CAN transmit output node 0**
	QSPI1_MRST	O6		**Slave SPI data output**
	IOM_MON2_1			**Monitor input 2**
	IOM_REF2_1			**Reference input 2**
	EVADC_FC7BFLOUT	O7		**Boundary flag output, FC channel 7**

Downloaded by IFXDMZlpar-zengzhe 12/02/2019 11:04:31

Table 2-46 Port 10 Functions (cont'd)

Ball	Symbol	Ctrl.	Buffer Type	Function
J5	P10.7	I	SLOW / PU1 / VEXT / ES	**General-purpose input**
	GTM_TIM1_IN0_3			**Mux input channel 0 of TIM module 1**
	GTM_TIM0_IN0_3			**Mux input channel 0 of TIM module 0**
	GPT120_T3EUDB			**Count direction control input of core timer T3**
	ASCLIN2_ACTSA			**Clear to send input**
	QSPI3_MRSTB			**Master SPI data input**
	SCU_E_REQ0_2			**ERU Channel 0 inputs 0 to 5 (0 is the LSB and 5 is the MSB)**
	CCU60_CCPOS1C			**Hall capture input 1**
	P10.7	O0		**General-purpose output**
	GTM_TOUT109	O1		**GTM muxed output**
	IOM_REF2_11			**Reference input 2**
	—	O2		**Reserved**
	QSPI3_MRST	O3		**Slave SPI data output**
	IOM_MON2_3			**Monitor input 2**
	IOM_REF2_3			**Reference input 2**
	—	O4		**Reserved**
	CAN20_TXD	O5		**CAN transmit output node 0**
	CAN12_TXD	O6		**CAN transmit output node 2**
	—	O7		**Reserved**

Downloaded by IFXDMZlpar-zengzhe 12/02/2019 11:04:31

Table 2-46 Port 10 Functions (cont'd)

Ball	Symbol	Ctrl.	Buffer Type	Function
J4	P10.8	I	SLOW / PU1 / VEXT / ES	**General-purpose input**
	GTM_TIM4_IN0_13			**Mux input channel 0 of TIM module 4**
	GTM_TIM1_IN5_2			**Mux input channel 5 of TIM module 1**
	GTM_TIM0_IN5_2			**Mux input channel 5 of TIM module 0**
	CAN12_RXDB			**CAN receive input node 2**
	GPT120_T4INB			**Trigger/gate input of timer T4**
	QSPI3_SCLKB			**Slave SPI clock inputs**
	SCU_E_REQ1_2			**ERU Channel 1 inputs 0 to 5 (0 is the LSB and 5 is the MSB)**
	CCU60_CCPOS2C			**Hall capture input 2**
	CAN20_RXDB			**CAN receive input node 0**
	RIF1_RAMP1B			**External RAMP B input**
	P10.8	O0		**General-purpose output**
	GTM_TOUT110	O1		**GTM muxed output**
	ASCLIN2_ARTS	O2		**Ready to send output**
	QSPI3_SCLK	O3		**Master SPI clock output**
	—	O4		**Reserved**
	—	O5		**Reserved**
	—	O6		**Reserved**
	—	O7		**Reserved**

Downloaded by IFXDMZ|par-zengzhe 12/02/2019 11:04:31

Table 2-47 Port 11 Functions

Ball	Symbol	Ctrl.	Buffer Type	Function
E10	P11.0	I	RFAST / PU1 / VFLEX / ES	**General-purpose input**
	GTM_TIM7_IN5_1			**Mux input channel 5 of TIM module 7**
	GTM_TIM4_IN0_4			**Mux input channel 0 of TIM module 4**
	GTM_TIM2_IN0_7			**Mux input channel 0 of TIM module 2**
	ASCLIN3_ARXB			**Receive input**
	GTM_DTMA2_1			**CDTM2_DTM4**
	P11.0	O0		**General-purpose output**
	GTM_TOUT119	O1		**GTM muxed output**
	ASCLIN3_ATX	O2		**Transmit output**
	IOM_MON2_15			**Monitor input 2**
	IOM_REF2_15			**Reference input 2**
	—	O3		**Reserved**
	—	O4		**Reserved**
	CAN11_TXD	O5		**CAN transmit output node 1**
	GETH_TXD3	O6		**Transmit Data**
	—	O7		**Reserved**
E9	P11.1	I	RFAST / PU1 / VFLEX / ES	**General-purpose input**
	GTM_TIM7_IN6_1			**Mux input channel 6 of TIM module 7**
	GTM_TIM4_IN1_5			**Mux input channel 1 of TIM module 4**
	GTM_TIM2_IN1_6			**Mux input channel 1 of TIM module 2**
	P11.1	O0		**General-purpose output**
	GTM_TOUT120	O1		**GTM muxed output**
	ASCLIN3_ASCLK	O2		**Shift clock output**
	ASCLIN3_ATX	O3		**Transmit output**
	IOM_MON2_15			**Monitor input 2**
	IOM_REF2_15			**Reference input 2**
	—	O4		**Reserved**
	CAN12_TXD	O5		**CAN transmit output node 2**
	GETH_TXD2	O6		**Transmit Data**
	—	O7		**Reserved**

Downloaded by IFXDMZlpar-zengzhe 12/02/2019 11:04:31

Table 2-47 Port 11 Functions (cont'd)

Ball	Symbol	Ctrl.	Buffer Type	Function
A12	P11.2	I	RFAST / PU1 / VFLEX / ES	**General-purpose input**
	GTM_TIM3_IN1_3			**Mux input channel 1 of TIM module 3**
	GTM_TIM2_IN1_3			**Mux input channel 1 of TIM module 2**
	P11.2	O0		**General-purpose output**
	GTM_TOUT95	O1		**GTM muxed output**
	—	O2		**Reserved**
	QSPI0_SLSO5	O3		**Master slave select output**
	QSPI1_SLSO5	O4		**Master slave select output**
	MSC0_EN1	O5		**Chip Select**
	GETH_TXD1	O6		**Transmit Data**
	CCU60_COUT63	O7		**T13 PWM channel 63**
	IOM_MON1_6			**Monitor input 1**
	IOM_REF1_0			**Reference input 1**
B12	P11.3	I	RFAST / PU1 / VFLEX / ES	**General-purpose input**
	GTM_TIM3_IN2_2			**Mux input channel 2 of TIM module 3**
	GTM_TIM2_IN2_2			**Mux input channel 2 of TIM module 2**
	MSC0_SDI3			**Upstream assynchronous input signal**
	QSPI1_MRSTB			**Master SPI data input**
	P11.3	O0		**General-purpose output**
	GTM_TOUT96	O1		**GTM muxed output**
	—	O2		**Reserved**
	QSPI1_MRST	O3		**Slave SPI data output**
	IOM_MON2_1			**Monitor input 2**
	IOM_REF2_1			**Reference input 2**
	ERAY0_TXDA	O4		**Transmit Channel A**
	—	O5		**Reserved**
	GETH_TXD0	O6		**Transmit Data**
	CCU60_COUT62	O7		**T12 PWM channel 62**
	IOM_MON1_5			**Monitor input 1**
	IOM_REF1_1			**Reference input 1**

Downloaded by IFXDMZ|par-zengzhe 12/02/2019 11:04:31

Table 2-47 Port 11 Functions (cont'd)

Ball	Symbol	Ctrl.	Buffer Type	Function
D10	P11.4	I	RFAST / PU1 / VFLEX / ES	**General-purpose input**
	GTM_TIM7_IN7_1			**Mux input channel 7 of TIM module 7**
	GTM_TIM4_IN2_5			**Mux input channel 2 of TIM module 4**
	GTM_TIM2_IN2_6			**Mux input channel 2 of TIM module 2**
	GETH_RXCLKB			**Receive Clock MII and RGMII (RGMII can use RXCLKA only)**
	P11.4	O0		**General-purpose output**
	GTM_TOUT121	O1		**GTM muxed output**
	ASCLIN3_ASCLK	O2		**Shift clock output**
	—	O3		**Reserved**
	—	O4		**Reserved**
	CAN13_TXD	O5		**CAN transmit output node 3**
	GETH_TXER	O6		**Transmit Error MII**
	GETH_TXCLK	O7		**Transmit Clock Output for RGMII**
D8	P11.5	I	SLOW / PU1 / VFLEX / ES	**General-purpose input**
	GTM_TIM4_IN3_5			**Mux input channel 3 of TIM module 4**
	GTM_TIM2_IN3_8			**Mux input channel 3 of TIM module 2**
	GETH_TXCLKA			**Transmit Clock Input for MII**
	GETH_GREFCLK			**Gigabit Reference Clock input for RGMII (125 MHz high precission)**
	P11.5	O0		**General-purpose output**
	GTM_TOUT122	O1		**GTM muxed output**
	—	O2		**Reserved**
	—	O3		**Reserved**
	—	O4		**Reserved**
	CAN20_TXD	O5		**CAN transmit output node 0**
	—	O6		**Reserved**
	—	O7		**Reserved**

Downloaded by IFXDMZ|par-zengzhe 12/02/2019 11:04:31

Table 2-47 Port 11 Functions (cont'd)

Ball	Symbol	Ctrl.	Buffer Type	Function
D9	P11.6	I	RFAST / PU1 / VFLEX / ES	**General-purpose input**
	GTM_TIM3_IN3_2			**Mux input channel 3 of TIM module 3**
	GTM_TIM2_IN3_2			**Mux input channel 3 of TIM module 2**
	QSPI1_SCLKB			**Slave SPI clock inputs**
	P11.6	O0		**General-purpose output**
	GTM_TOUT97	O1		**GTM muxed output**
	ERAY0_TXENB	O2		**Transmit Enable Channel B**
	QSPI1_SCLK	O3		**Master SPI clock output**
	ERAY0_TXENA	O4		**Transmit Enable Channel A**
	MSC0_FCLP	O5		**Shift-clock direct part of the differential signal**
	GETH_TXEN	O6		**Transmit Enable MII and RMII**
	GETH_TCTL			**Transmit Control for RGMII**
	CCU60_COUT61	O7		**T12 PWM channel 61**
	IOM_MON1_4			**Monitor input 1**
	IOM_REF1_2			**Reference input 1**
E8	P11.7	I	SLOW / PU1 / VFLEX / ES	**General-purpose input**
	GTM_TIM4_IN4_5			**Mux input channel 4 of TIM module 4**
	GTM_TIM2_IN4_7			**Mux input channel 4 of TIM module 2**
	GETH_RXD3A			**Receive Data 3 MII and RGMII (RGMII can use RXD3A only)**
	CAN11_RXDD			**CAN receive input node 1**
	P11.7	O0		**General-purpose output**
	GTM_TOUT123	O1		**GTM muxed output**
	—	O2		**Reserved**
	—	O3		**Reserved**
	—	O4		**Reserved**
	—	O5		**Reserved**
	—	O6		**Reserved**
	—	O7		**Reserved**

Downloaded by IFXDMZlpar-zengzhe 12/02/2019 11:04:31

Table 2-47 Port 11 Functions (cont'd)

Ball	Symbol	Ctrl.	Buffer Type	Function
E7	P11.8	I	SLOW / PU1 / VFLEX / ES	**General-purpose input**
	GTM_TIM4_IN5_5			**Mux input channel 5 of TIM module 4**
	GTM_TIM2_IN5_8			**Mux input channel 5 of TIM module 2**
	GETH_RXD2A			**Receive Data 2 MII and RGMII (RGMII can use RXD2A only)**
	CAN12_RXDD			**CAN receive input node 2**
	P11.8	O0		**General-purpose output**
	GTM_TOUT124	O1		**GTM muxed output**
	—	O2		**Reserved**
	—	O3		**Reserved**
	—	O4		**Reserved**
	—	O5		**Reserved**
	—	O6		**Reserved**
	—	O7		**Reserved**
A11	P11.9	I	FAST / PU1 / VFLEX / ES	**General-purpose input**
	GTM_TIM3_IN4_2			**Mux input channel 4 of TIM module 3**
	GTM_TIM2_IN4_2			**Mux input channel 4 of TIM module 2**
	QSPI1_MTSRB			**Save SPI data input**
	ERAY0_RXDA1			**Receive Channel A1**
	GETH_RXD1A			**Receive Data 1 MII, RMII and RGMII (RGMII can use RXD1A only)**
	P11.9	O0		**General-purpose output**
	GTM_TOUT98	O1		**GTM muxed output**
	—	O2		**Reserved**
	QSPI1_MTSR	O3		**Master SPI data output**
	—	O4		**Reserved**
	MSC0_SOP	O5		**Data output - direct part of the differential signal**
	—	O6		**Reserved**
	CCU60_COUT60	O7		**T12 PWM channel 60**
	IOM_MON1_3			**Monitor input 1**
	IOM_REF1_3			**Reference input 1**

Downloaded by IFXDMZ|par-zengzhe 12/02/2019 11:04:31

Table 2-47 Port 11 Functions (cont'd)

Ball	Symbol	Ctrl.	Buffer Type	Function
B11	P11.10	I	FAST / PU1 / VFLEX / ES	**General-purpose input**
	GTM_TIM3_IN5_2			**Mux input channel 5 of TIM module 3**
	GTM_TIM2_IN5_2			**Mux input channel 5 of TIM module 2**
	GTM_TIM2_IN0_9			**Mux input channel 0 of TIM module 2**
	CAN03_RXDD			**CAN receive input node 3**
	ERAY0_RXDB1			**Receive Channel B1**
	ASCLIN1_ARXE			**Receive input**
	SCU_E_REQ6_3			**ERU Channel 6 inputs 0 to 5 (0 is the LSB and 5 is the MSB)**
	MSC0_SDI0			**Upstream assynchronous input signal**
	GETH_RXD0A			**Receive Data 0 MII, RMII and RGMII (RGMII can use RXD0A only)**
	QSPI1_SLSIA			**Slave select input**
	P11.10	O0		**General-purpose output**
	GTM_TOUT99	O1		**GTM muxed output**
	—	O2		**Reserved**
	QSPI0_SLSO3	O3		**Master slave select output**
	QSPI1_SLSO3	O4		**Master slave select output**
	—	O5		**Reserved**
	—	O6		**Reserved**
	CCU60_CC62	O7		**T12 PWM channel 62**
	IOM_MON1_0			**Monitor input 1**
	IOM_REF1_4			**Reference input 1**

Downloaded by IFXDMZlpar-zengzhe 12/02/2019 11:04:31

Table 2-47 Port 11 Functions (cont'd)

Ball	Symbol	Ctrl.	Buffer Type	Function
A10	P11.11	I	FAST / PU1 / VFLEX / ES	**General-purpose input**
	GTM_TIM3_IN6_2			**Mux input channel 6 of TIM module 3**
	GTM_TIM3_IN0_14			**Mux input channel 0 of TIM module 3**
	GTM_TIM2_IN6_2			**Mux input channel 6 of TIM module 2**
	GETH_CRSDVA			**Carrier Sense / Data Valid combi-signal for RMII**
	GETH_RXDVA			**Receive Data Valid MII**
	GETH_CRSB			**Carrier Sense MII**
	GETH_RCTLA			**Receive Control for RGMII**
	P11.11	O0		**General-purpose output**
	GTM_TOUT100	O1		**GTM muxed output**
	—	O2		**Reserved**
	QSPI0_SLSO4	O3		**Master slave select output**
	QSPI1_SLSO4	O4		**Master slave select output**
	MSC0_EN0	O5		**Chip Select**
	ERAY0_TXENB	O6		**Transmit Enable Channel B**
	CCU60_CC61	O7		**T12 PWM channel 61**
	IOM_MON1_1			**Monitor input 1**
	IOM_REF1_5			**Reference input 1**

Downloaded by IFXDMZ|par-zengzhe 12/02/2019 11:04:31

Table 2-47 Port 11 Functions (cont'd)

Ball	Symbol	Ctrl.	Buffer Type	Function
B10	P11.12	I	FAST / PU1 / VFLEX / ES	**General-purpose input**
	GTM_TIM3_IN7_2			**Mux input channel 7 of TIM module 3**
	GTM_TIM2_IN7_2			**Mux input channel 7 of TIM module 2**
	GETH_REFCLKA			**Reference Clock input for RMII (50 MHz)**
	GETH_TXCLKB			**Transmit Clock Input for MII**
	GETH_RXCLKA			**Receive Clock MII and RGMII (RGMII can use RXCLKA only)**
	P11.12	O0		**General-purpose output**
	GTM_TOUT101	O1		**GTM muxed output**
	ASCLIN1_ATX	O2		**Transmit output**
	IOM_MON2_13			**Monitor input 2**
	IOM_REF2_13			**Reference input 2**
	GTM_CLK2	O3		**CGM generated clock**
	ERAY0_TXDB	O4		**Transmit Channel B**
	CAN03_TXD	O5		**CAN transmit output node 3**
	IOM_MON2_8			**Monitor input 2**
	IOM_REF2_8			**Reference input 2**
	CCU_EXTCLK1	O6		**CCU external clock**
	CCU60_CC60	O7		**T12 PWM channel 60**
	IOM_MON1_2			**Monitor input 1**
	IOM_REF1_6			**Reference input 1**
E6	P11.13	I	SLOW / PU1 / VFLEX / ES	**General-purpose input**
	GTM_TIM4_IN6_5			**Mux input channel 6 of TIM module 4**
	GTM_TIM2_IN6_7			**Mux input channel 6 of TIM module 2**
	GETH_RXERA			**Receive Error MII**
	I2C1_SDAA			**Serial Data Input**
	CAN13_RXDD			**CAN receive input node 3**
	P11.13	O0		**General-purpose output**
	GTM_TOUT125	O1		**GTM muxed output**
	—	O2		**Reserved**
	—	O3		**Reserved**
	—	O4		**Reserved**
	—	O5		**Reserved**
	I2C1_SDA	O6		**Serial Data Output**
	—	O7		**Reserved**

Downloaded by IFXDMZ|par-zengzhe 12/02/2019 11:04:31

Table 2-47 Port 11 Functions (cont'd)

Ball	Symbol	Ctrl.	Buffer Type	Function
D7	P11.14	I	SLOW / PU1 / VFLEX / ES	**General-purpose input**
	GTM_TIM4_IN7_4			**Mux input channel 7 of TIM module 4**
	GTM_TIM2_IN7_8			**Mux input channel 7 of TIM module 2**
	GETH_CRSDVB			**Carrier Sense / Data Valid combi-signal for RMII**
	GETH_RXDVB			**Receive Data Valid MII**
	GETH_CRSA			**Carrier Sense MII**
	I2C1_SCLA			**Serial Clock Input**
	CAN20_RXDF			**CAN receive input node 0**
	P11.14	O0		**General-purpose output**
	GTM_TOUT126	O1		**GTM muxed output**
	—	O2		**Reserved**
	—	O3		**Reserved**
	—	O4		**Reserved**
	—	O5		**Reserved**
	I2C1_SCL	O6		**Serial Clock Output**
	—	O7		**Reserved**
D6	P11.15	I	SLOW / PU1 / VFLEX / ES	**General-purpose input**
	GTM_TIM4_IN7_5			**Mux input channel 7 of TIM module 4**
	GTM_TIM0_IN7_8			**Mux input channel 0 of TIM module 0**
	GETH_COLA			**Collision MII**
	P11.15	O0		**General-purpose output**
	GTM_TOUT127	O1		**GTM muxed output**
	—	O2		**Reserved**
	—	O3		**Reserved**
	—	O4		**Reserved**
	—	O5		**Reserved**
	—	O6		**Reserved**
	—	O7		**Reserved**

Downloaded by IFXDMZ|par-zengzhe 12/02/2019 11:04:31

Table 2-48 Port 12 Functions

Ball	Symbol	Ctrl.	Buffer Type	Function
E12	P12.0	I	SLOW / PU1 / VFLEX / ES	**General-purpose input**
	GTM_TIM7_IN3_2			**Mux input channel 3 of TIM module 7**
	GTM_TIM4_IN0_5			**Mux input channel 0 of TIM module 4**
	GTM_TIM3_IN0_7			**Mux input channel 0 of TIM module 3**
	CAN00_RXDC			**CAN receive input node 0**
	GETH_RXCLKC			**Receive Clock MII and RGMII (RGMII can use RXCLKA only)**
	GTM_DTMA4_0			**CDTM4_DTM4**
	P12.0	O0		**General-purpose output**
	GTM_TOUT128	O1		**GTM muxed output**
	—	O2		**Reserved**
	—	O3		**Reserved**
	—	O4		**Reserved**
	—	O5		**Reserved**
	GETH_MDC	O6		**MDIO clock**
	—	O7		**Reserved**
E11	P12.1	I	SLOW / PU1 / VFLEX / ES	**General-purpose input**
	GTM_TIM7_IN4_1			**Mux input channel 4 of TIM module 7**
	GTM_TIM4_IN1_6			**Mux input channel 1 of TIM module 4**
	GTM_TIM3_IN1_6			**Mux input channel 1 of TIM module 3**
	GETH_MDIOC			**MDIO Input**
	P12.1	O0		**General-purpose output**
	GTM_TOUT129	O1		**GTM muxed output**
	ASCLIN3_ASLSO	O2		**Slave select signal output**
	—	O3		**Reserved**
	—	O4		**Reserved**
	CAN00_TXD	O5		**CAN transmit output node 0**
	IOM_MON2_5			**Monitor input 2**
	IOM_REF2_5			**Reference input 2**
	—	O6		**Reserved**
	—	O7		**Reserved**
	GETH_MDIO	O		**MDIO Output**

Downloaded by IFXDMZlpar-zengzhe 12/02/2019 11:04:31

Table 2-49 Port 14 Functions

Ball	Symbol	Ctrl.	Buffer Type	Function
B16	P14.0	I	FAST / PU1 / VEXT / ES2	**General-purpose input**
	GTM_TIM1_IN3_5			**Mux input channel 3 of TIM module 1**
	GTM_TIM0_IN3_5			**Mux input channel 3 of TIM module 0**
	SENT_SENT17D			**Receive input channel 17**
	P14.0	O0		**General-purpose output**
	GTM_TOUT80	O1		**GTM muxed output**
	ASCLIN0_ATX	O2		**Transmit output**
	IOM_MON2_12			**Monitor input 2**
	IOM_REF2_12			**Reference input 2**
	ERAY0_TXDA	O3		**Transmit Channel A**
	ERAY0_TXDB	O4		**Transmit Channel B**
	CAN01_TXD	O5		**CAN transmit output node 1**
	IOM_MON2_6			**Monitor input 2**
	IOM_REF2_6			**Reference input 2**
	ASCLIN0_ASCLK	O6		**Shift clock output**
	CCU60_COUT62	O7		**T12 PWM channel 62**
	IOM_MON1_5			**Monitor input 1**
	IOM_REF1_1			**Reference input 1**

Downloaded by IFXDMZ|par-zengzhe 12/02/2019 11:04:31

Table 2-49 Port 14 Functions (cont'd)

Ball	Symbol	Ctrl.	Buffer Type	Function
A15	P14.1	I	FAST / PU1 / VEXT / ES2	**General-purpose input**
	GTM_TIM1_IN4_3			**Mux input channel 4 of TIM module 1**
	GTM_TIM0_IN4_3			**Mux input channel 4 of TIM module 0**
	ERAY0_RXDA3			**Receive Channel A3**
	ASCLIN0_ARXA			**Receive input**
	SENT_SENT18D			**Receive input channel 18**
	ERAY0_RXDB3			**Receive Channel B3**
	CAN01_RXDB			**CAN receive input node 1**
	SCU_E_REQ3_1			**ERU Channel 3 inputs 0 to 5 (0 is the LSB and 5 is the MSB)**
	PMS_PINAWKP			**PINA (P14.1) pin input**
	P14.1	O0		**General-purpose output**
	GTM_TOUT81	O1		**GTM muxed output**
	ASCLIN0_ATX	O2		**Transmit output**
	IOM_MON2_12			**Monitor input 2**
	IOM_REF2_12			**Reference input 2**
	—	O3		**Reserved**
	—	O4		**Reserved**
	—	O5		**Reserved**
	—	O6		**Reserved**
	CCU60_COUT63	O7		**T13 PWM channel 63**
	IOM_MON1_6			**Monitor input 1**
	IOM_REF1_0			**Reference input 1**
E13	P14.2	I	SLOW / PU2 / VEXT / ES	**General-purpose input**
	GTM_TIM1_IN5_3			**Mux input channel 5 of TIM module 1**
	GTM_TIM0_IN5_3			**Mux input channel 5 of TIM module 0**
	SCU_PD_HWCFG2			**Hardware configuration pin 2**
	P14.2	O0		**General-purpose output**
	GTM_TOUT82	O1		**GTM muxed output**
	ASCLIN2_ATX	O2		**Transmit output**
	IOM_MON2_14			**Monitor input 2**
	IOM_REF2_14			**Reference input 2**
	QSPI2_SLSO1	O3		**Master slave select output**
	—	O4		**Reserved**
	—	O5		**Reserved**
	ASCLIN2_ASCLK	O6		**Shift clock output**
	—	O7		**Reserved**

Downloaded by IFXDMZ|par-zengzhe 12/02/2019 11:04:31

Table 2-49 Port 14 Functions (cont'd)

Ball	Symbol	Ctrl.	Buffer Type	Function
B14	P14.3	I	SLOW / PU2 / VEXT / ES	**General-purpose input**
	GTM_TIM1_IN6_3			**Mux input channel 6 of TIM module 1**
	GTM_TIM0_IN6_3			**Mux input channel 6 of TIM module 0**
	SCU_PD_HWCFG3			**Hardware configuration pin 3**
	ASCLIN2_ARXA			**Receive input**
	MSC0_SDI2			**Upstream assynchronous input signal**
	SCU_E_REQ1_0			**ERU Channel 1 inputs 0 to 5 (0 is the LSB and 5 is the MSB)**
	P14.3	O0		**General-purpose output**
	GTM_TOUT83	O1		**GTM muxed output**
	ASCLIN2_ATX	O2		**Transmit output**
	IOM_MON2_14			**Monitor input 2**
	IOM_REF2_14			**Reference input 2**
	QSPI2_SLSO3	O3		**Master slave select output**
	ASCLIN1_ASLSO	O4		**Slave select signal output**
	ASCLIN3_ASLSO	O5		**Slave select signal output**
	—	O6		**Reserved**
	—	O7		**Reserved**
B15	P14.4	I	SLOW / PU2 / VEXT / ES	**General-purpose input**
	GTM_TIM1_IN7_2			**Mux input channel 7 of TIM module 1**
	GTM_TIM0_IN7_2			**Mux input channel 0 of TIM module 0**
	SCU_PD_HWCFG6			**Hardware configuration pin 6**
	GTM_DTMT0_0			**CDTM0_DTM0**
	P14.4	O0		**General-purpose output**
	GTM_TOUT84	O1		**GTM muxed output**
	—	O2		**Reserved**
	—	O3		**Reserved**
	—	O4		**Reserved**
	—	O5		**Reserved**
	GETH_PPS	O6		**Pulse Per Second**
	—	O7		**Reserved**

Downloaded by IFXDMZlpar-zengzhe 12/02/2019 11:04:31

Table 2-49 Port 14 Functions (cont'd)

Ball	Symbol	Ctrl.	Buffer Type	Function
A14	P14.5	I	FAST / PU2 / VEXT / ES	**General-purpose input**
	GTM_TIM1_IN0_4			**Mux input channel 0 of TIM module 1**
	GTM_TIM0_IN0_4			**Mux input channel 0 of TIM module 0**
	SCU_PD_HWCFG1			**Hardware configuration pin 1**
	QSPI5_MRSTB			**Master SPI data input**
	GTM_DTMA2_0			**CDTM2_DTM4**
	P14.5	O0		**General-purpose output**
	GTM_TOUT85	O1		**GTM muxed output**
	—	O2		**Reserved**
	QSPI5_MRST	O3		**Slave SPI data output**
	—	O4		**Reserved**
	—	O5		**Reserved**
	ERAY0_TXDB	O6		**Transmit Channel B**
	ERAY1_TXDB	O7		**Transmit Channel B**
B13	P14.6	I	FAST / PU1 / VEXT / ES	**General-purpose input**
	GTM_TIM1_IN1_4			**Mux input channel 1 of TIM module 1**
	GTM_TIM0_IN1_4			**Mux input channel 1 of TIM module 0**
	QSPI5_MTSRB			**Save SPI data input**
	P14.6	O0		**General-purpose output**
	GTM_TOUT86	O1		**GTM muxed output**
	QSPI5_MTSR	O2		**Master SPI data output**
	QSPI2_SLSO2	O3		**Master slave select output**
	CAN13_TXD	O4		**CAN transmit output node 3**
	—	O5		**Reserved**
	ERAY0_TXENB	O6		**Transmit Enable Channel B**
	ERAY1_TXENB	O7		**Transmit Enable Channel B**

Downloaded by IFXDMZlpar-zengzhe 12/02/2019 11:04:31

Table 2-49 Port 14 Functions (cont'd)

Ball	Symbol	Ctrl.	Buffer Type	Function
D13	P14.7	I	SLOW / PU1 / VEXT / ES	**General-purpose input**
	GTM_TIM4_IN7_10			**Mux input channel 7 of TIM module 4**
	GTM_TIM1_IN0_5			**Mux input channel 0 of TIM module 1**
	GTM_TIM0_IN0_5			**Mux input channel 0 of TIM module 0**
	ERAY0_RXDB0			**Receive Channel B0**
	ERAY1_RXDB0			**Receive Channel B0**
	CAN10_RXDB			**CAN receive input node 0**
	CAN13_RXDA			**CAN receive input node 3**
	ASCLIN9_ARXC			**Receive input**
	P14.7	O0		**General-purpose output**
	GTM_TOUT87	O1		**GTM muxed output**
	ASCLIN0_ARTS	O2		**Ready to send output**
	QSPI2_SLSO4	O3		**Master slave select output**
	ASCLIN9_ATX	O4		**Transmit output**
	—	O5		**Reserved**
	—	O6		**Reserved**
	—	O7		**Reserved**
A13	P14.8	I	SLOW / PU1 / VEXT / ES	**General-purpose input**
	GTM_TIM3_IN2_3			**Mux input channel 2 of TIM module 3**
	GTM_TIM2_IN2_3			**Mux input channel 2 of TIM module 2**
	ERAY0_RXDA0			**Receive Channel A0**
	CAN02_RXDD			**CAN receive input node 2**
	ASCLIN1_ARXD			**Receive input**
	ERAY1_RXDA0			**Receive Channel A0**
	P14.8	O0		**General-purpose output**
	GTM_TOUT88	O1		**GTM muxed output**
	ASCLIN5_ASLSO	O2		**Slave select signal output**
	ASCLIN7_ASLSO	O3		**Slave select signal output**
	—	O4		**Reserved**
	—	O5		**Reserved**
	—	O6		**Reserved**
	—	O7		**Reserved**

Downloaded by IFXDMZ|par-zengzhe 12/02/2019 11:04:31

Table 2-49 Port 14 Functions (cont'd)

Ball	Symbol	Ctrl.	Buffer Type	Function
D12	P14.9	I	LVDS_RX / FAST / PU1 / VEXT / ES	**General-purpose input**
	GTM_TIM3_IN3_3			**Mux input channel 3 of TIM module 3**
	GTM_TIM2_IN3_3			**Mux input channel 3 of TIM module 2**
	ASCLIN0_ACTSA			**Clear to send input**
	QSPI2_MRSTFN			**Master SPI data input (LVDS N line)**
	ASCLIN9_ARXD			**Receive input**
	P14.9	O0		**General-purpose output**
	GTM_TOUT89	O1		**GTM muxed output**
	CAN23_TXD	O2		**CAN transmit output node 3**
	MSC0_EN1	O3		**Chip Select**
	CAN10_TXD	O4		**CAN transmit output node 0**
	ERAY0_TXENB	O5		**Transmit Enable Channel B**
	ERAY0_TXENA	O6		**Transmit Enable Channel A**
	ERAY1_TXENA	O7		**Transmit Enable Channel A**
D11	P14.10	I	LVDS_RX / FAST / PU1 / VEXT / ES	**General-purpose input**
	GTM_TIM3_IN4_3			**Mux input channel 4 of TIM module 3**
	GTM_TIM2_IN4_3			**Mux input channel 4 of TIM module 2**
	CAN23_RXDA			**CAN receive input node 3**
	QSPI2_MRSTFP			**Master SPI data input (LVDS P line)**
	P14.10	O0		**General-purpose output**
	GTM_TOUT90	O1		**GTM muxed output**
	QSPI5_SCLK	O2		**Master SPI clock output**
	MSC0_EN0	O3		**Chip Select**
	ASCLIN1_ATX	O4		**Transmit output**
	IOM_MON2_13			**Monitor input 2**
	IOM_REF2_13			**Reference input 2**
	CAN02_TXD	O5		**CAN transmit output node 2**
	IOM_MON2_7			**Monitor input 2**
	IOM_REF2_7			**Reference input 2**
	ERAY0_TXDA	O6		**Transmit Channel A**
	ERAY1_TXDA	O7		**Transmit Channel A**

Downloaded by IFXDMZlpar-zengzhe 12/02/2019 11:04:31

Table 2-50 Port 15 Functions

Ball	Symbol	Ctrl.	Buffer Type	Function
B20	P15.0	I	FAST / PU1 / VEXT / ES	**General-purpose input**
	GTM_TIM3_IN3_4			**Mux input channel 3 of TIM module 3**
	GTM_TIM2_IN3_4			**Mux input channel 3 of TIM module 2**
	SDMMC0_DAT7_IN			**read data in**
	P15.0	O0		**General-purpose output**
	GTM_TOUT71	O1		**GTM muxed output**
	ASCLIN1_ATX	O2		**Transmit output**
	IOM_MON2_13			**Monitor input 2**
	IOM_REF2_13			**Reference input 2**
	QSPI0_SLSO13	O3		**Master slave select output**
	—	O4		**Reserved**
	CAN02_TXD	O5		**CAN transmit output node 2**
	IOM_MON2_7			**Monitor input 2**
	IOM_REF2_7			**Reference input 2**
	ASCLIN1_ASCLK	O6		**Shift clock output**
	—	O7		**Reserved**
	SDMMC0_DAT7	O		**write data out**
A18	P15.1	I	FAST / PU1 / VEXT / ES	**General-purpose input**
	GTM_TIM3_IN4_4			**Mux input channel 4 of TIM module 3**
	GTM_TIM2_IN4_4			**Mux input channel 4 of TIM module 2**
	CAN02_RXDA			**CAN receive input node 2**
	ASCLIN1_ARXA			**Receive input**
	QSPI2_SLSIB			**Slave select input**
	SCU_E_REQ7_2			**ERU Channel 7 inputs 0 to 5 (0 is the LSB and 5 is the MSB)**
	P15.1	O0		**General-purpose output**
	GTM_TOUT72	O1		**GTM muxed output**
	ASCLIN1_ATX	O2		**Transmit output**
	IOM_MON2_13			**Monitor input 2**
	IOM_REF2_13			**Reference input 2**
	QSPI2_SLSO5	O3		**Master slave select output**
	—	O4		**Reserved**
	—	O5		**Reserved**
	—	O6		**Reserved**
	SDMMC0_CLK	O7		**card clock**

Downloaded by IFXDMZ|par-zengzhe 12/02/2019 11:04:31

Table 2-50 Port 15 Functions (cont'd)

Ball	Symbol	Ctrl.	Buffer Type	Function
C19	P15.2	I	FAST / PU1 / VEXT / ES	**General-purpose input**
	GTM_TIM3_IN5_4			**Mux input channel 5 of TIM module 3**
	GTM_TIM2_IN5_4			**Mux input channel 5 of TIM module 2**
	QSPI2_SLSIA			**Slave select input**
	SENT_SENT10D			**Receive input channel 10**
	QSPI2_MRSTE			**Master SPI data input**
	QSPI2_HSICINA			**Highspeed capture channel**
	P15.2	O0		**General-purpose output**
	GTM_TOUT73	O1		**GTM muxed output**
	ASCLIN0_ATX	O2		**Transmit output**
	IOM_MON2_12			**Monitor input 2**
	IOM_REF2_12			**Reference input 2**
	QSPI2_SLSO0	O3		**Master slave select output**
	—	O4		**Reserved**
	CAN01_TXD	O5		**CAN transmit output node 1**
	IOM_MON2_6			**Monitor input 2**
	IOM_REF2_6			**Reference input 2**
	ASCLIN0_ASCLK	O6		**Shift clock output**
	—	O7		**Reserved**
B17	P15.3	I	FAST / PU1 / VEXT / ES	**General-purpose input**
	GTM_TIM3_IN6_4			**Mux input channel 6 of TIM module 3**
	GTM_TIM2_IN6_4			**Mux input channel 6 of TIM module 2**
	CAN01_RXDA			**CAN receive input node 1**
	ASCLIN0_ARXB			**Receive input**
	QSPI2_SCLKA			**Slave SPI clock inputs**
	QSPI2_HSICINB			**Highspeed capture channel**
	SDMMC0_CMD_IN			**command in**
	P15.3	O0		**General-purpose output**
	GTM_TOUT74	O1		**GTM muxed output**
	ASCLIN0_ATX	O2		**Transmit output**
	IOM_MON2_12			**Monitor input 2**
	IOM_REF2_12			**Reference input 2**
	QSPI2_SCLK	O3		**Master SPI clock output**
	—	O4		**Reserved**
	MSC0_EN1	O5		**Chip Select**
	—	O6		**Reserved**
	—	O7		**Reserved**
	SDMMC0_CMD	O		**command out**

Downloaded by IFXDMZlpar-zengzhe 12/02/2019 11:04:31

Table 2-50 Port 15 Functions (cont'd)

Ball	Symbol	Ctrl.	Buffer Type	Function
A17	P15.4	I	FAST / PU1 / VEXT / ES	**General-purpose input**
	GTM_TIM3_IN7_4			**Mux input channel 7 of TIM module 3**
	GTM_TIM2_IN7_4			**Mux input channel 7 of TIM module 2**
	I2C0_SCLC			**Serial Clock Input**
	QSPI2_MRSTA			**Master SPI data input**
	SCU_E_REQ0_0			**ERU Channel 0 inputs 0 to 5 (0 is the LSB and 5 is the MSB)**
	SENT_SENT11D			**Receive input channel 11**
	P15.4	O0		**General-purpose output**
	GTM_TOUT75	O1		**GTM muxed output**
	ASCLIN1_ATX	O2		**Transmit output**
	IOM_MON2_13			**Monitor input 2**
	IOM_REF2_13			**Reference input 2**
	QSPI2_MRST	O3		**Slave SPI data output**
	IOM_MON2_2			**Monitor input 2**
	IOM_REF2_2			**Reference input 2**
	—	O4		**Reserved**
	—	O5		**Reserved**
	I2C0_SCL	O6		**Serial Clock Output**
	CCU60_CC62	O7		**T12 PWM channel 62**
	IOM_MON1_0			**Monitor input 1**
	IOM_REF1_4			**Reference input 1**

Downloaded by IFXDMZ|par-zengzhe 12/02/2019 11:04:31

Table 2-50 Port 15 Functions (cont'd)

Ball	Symbol	Ctrl.	Buffer Type	Function
E14	P15.5	I	FAST / PU1 / VEXT / ES	**General-purpose input**
	GTM_TIM3_IN0_4			**Mux input channel 0 of TIM module 3**
	GTM_TIM2_IN0_4			**Mux input channel 0 of TIM module 2**
	ASCLIN1_ARXB			**Receive input**
	I2C0_SDAC			**Serial Data Input**
	QSPI2_MTSRA			**Save SPI data input**
	SCU_E_REQ4_3			**ERU Channel 4 inputs 0 to 5 (0 is the LSB and 5 is the MSB)**
	P15.5	O0		**General-purpose output**
	GTM_TOUT76	O1		**GTM muxed output**
	ASCLIN1_ATX	O2		**Transmit output**
	IOM_MON2_13			**Monitor input 2**
	IOM_REF2_13			**Reference input 2**
	QSPI2_MTSR	O3		**Master SPI data output**
	—	O4		**Reserved**
	MSC0_EN0	O5		**Chip Select**
	I2C0_SDA	O6		**Serial Data Output**
	CCU60_CC61	O7		**T12 PWM channel 61**
	IOM_MON1_1			**Monitor input 1**
	IOM_REF1_5			**Reference input 1**
A16	P15.6	I	FAST / PU1 / VEXT / ES	**General-purpose input**
	GTM_TIM2_IN2_14			**Mux input channel 2 of TIM module 2**
	GTM_TIM1_IN0_6			**Mux input channel 0 of TIM module 1**
	GTM_TIM0_IN0_6			**Mux input channel 0 of TIM module 0**
	QSPI2_MTSRB			**Save SPI data input**
	P15.6	O0		**General-purpose output**
	GTM_TOUT77	O1		**GTM muxed output**
	ASCLIN3_ATX	O2		**Transmit output**
	IOM_MON2_15			**Monitor input 2**
	IOM_REF2_15			**Reference input 2**
	QSPI2_MTSR	O3		**Master SPI data output**
	QSPI5_SLSO3	O4		**Master slave select output**
	QSPI2_SCLK	O5		**Master SPI clock output**
	ASCLIN3_ASCLK	O6		**Shift clock output**
	CCU60_CC60	O7		**T12 PWM channel 60**
	IOM_MON1_2			**Monitor input 1**
	IOM_REF1_6			**Reference input 1**

Downloaded by IFXDMZlpar-zengzhe 12/02/2019 11:04:31

Table 2-50 Port 15 Functions (cont'd)

Ball	Symbol	Ctrl.	Buffer Type	Function
D15	P15.7	I	FAST / PU1 / VEXT / ES	**General-purpose input**
	GTM_TIM1_IN1_5			**Mux input channel 1 of TIM module 1**
	GTM_TIM0_IN1_5			**Mux input channel 1 of TIM module 0**
	ASCLIN3_ARXA			**Receive input**
	QSPI2_MRSTB			**Master SPI data input**
	P15.7	O0		**General-purpose output**
	GTM_TOUT78	O1		**GTM muxed output**
	ASCLIN3_ATX	O2		**Transmit output**
	IOM_MON2_15			**Monitor input 2**
	IOM_REF2_15			**Reference input 2**
	QSPI2_MRST	O3		**Slave SPI data output**
	IOM_MON2_2			**Monitor input 2**
	IOM_REF2_2			**Reference input 2**
	—	O4		**Reserved**
	—	O5		**Reserved**
	—	O6		**Reserved**
	CCU60_COUT60	O7		**T12 PWM channel 60**
	IOM_MON1_3			**Monitor input 1**
	IOM_REF1_3			**Reference input 1**
D14	P15.8	I	FAST / PU1 / VEXT / ES	**General-purpose input**
	GTM_TIM1_IN2_5			**Mux input channel 2 of TIM module 1**
	GTM_TIM0_IN2_5			**Mux input channel 2 of TIM module 0**
	QSPI2_SCLKB			**Slave SPI clock inputs**
	SCU_E_REQ5_0			**ERU Channel 5 inputs 0 to 5 (0 is the LSB and 5 is the MSB)**
	P15.8	O0		**General-purpose output**
	GTM_TOUT79	O1		**GTM muxed output**
	—	O2		**Reserved**
	QSPI2_SCLK	O3		**Master SPI clock output**
	—	O4		**Reserved**
	—	O5		**Reserved**
	ASCLIN3_ASCLK	O6		**Shift clock output**
	CCU60_COUT61	O7		**T12 PWM channel 61**
	IOM_MON1_4			**Monitor input 1**
	IOM_REF1_2			**Reference input 1**

Downloaded by IFXDMZ|par-zengzhe 12/02/2019 11:04:31

Table 2-51 Port 20 Functions

Ball	Symbol	Ctrl.	Buffer Type	Function
H20	P20.0	I	FAST / PU1 / VEXT / ES	General-purpose input
	GTM_TIM1_IN6_7			Mux input channel 6 of TIM module 1
	GTM_TIM1_IN4_9			Mux input channel 4 of TIM module 1
	GTM_TIM0_IN6_7			Mux input channel 6 of TIM module 0
	CAN03_RXDC			CAN receive input node 3
	CCU_PAD_SYSCLK			Clock input pin for System PLL and Peripheral PLL
	CAN21_RXDC			CAN receive input node 1
	CBS_TGI0			Trigger input
	SCU_E_REQ6_0			ERU Channel 6 inputs 0 to 5 (0 is the LSB and 5 is the MSB)
	GPT120_T6EUDA			Count direction control input of core timer T6
	P20.0	O0		General-purpose output
	GTM_TOUT59	O1		GTM muxed output
	ASCLIN3_ATX	O2		Transmit output
	IOM_MON2_15			Monitor input 2
	IOM_REF2_15			Reference input 2
	ASCLIN3_ASCLK	O3		Shift clock output
	—	O4		Reserved
	HSCT0_SYSCLK_OUT	O5		sys clock output
	—	O6		Reserved
	—	O7		Reserved
	CBS_TGO0	O		Trigger output
G19	P20.1	I	SLOW / PU1 / VEXT / ES	General-purpose input
	GTM_TIM4_IN4_11			Mux input channel 4 of TIM module 4
	GTM_TIM3_IN3_5			Mux input channel 3 of TIM module 3
	GTM_TIM2_IN3_5			Mux input channel 3 of TIM module 2
	CBS_TGI1			Trigger input
	GTM_DTMA1_1			CDTM1_DTM4
	P20.1	O0		General-purpose output
	GTM_TOUT60	O1		GTM muxed output
	—	O2		Reserved
	—	O3		Reserved
	—	O4		Reserved
	—	O5		Reserved
	—	O6		Reserved
	—	O7		Reserved
	CBS_TGO1	O		Trigger output

Downloaded by IFXDMZ|par-zengzhe 12/02/2019 11:04:31

Table 2-51 Port 20 Functions (cont'd)

Ball	Symbol	Ctrl.	Buffer Type	Function
H19	P20.2	I	S / PU / VEXT	**General-purpose input** This pin is latched at power on reset release to enter test mode.
	$\overline{\text{TESTMODE}}$			**Testmode Enable Input**
G20	P20.3	I	SLOW / PU1 / VEXT / ES	**General-purpose input**
	GTM_TIM4_IN5_11			**Mux input channel 5 of TIM module 4**
	GTM_TIM3_IN4_5			**Mux input channel 4 of TIM module 3**
	GTM_TIM2_IN4_5			**Mux input channel 4 of TIM module 2**
	ASCLIN3_ARXC			**Receive input**
	GPT120_T6INA			**Trigger/gate input of core timer T6**
	P20.3	O0		**General-purpose output**
	GTM_TOUT61	O1		**GTM muxed output**
	ASCLIN3_ATX	O2		**Transmit output**
	IOM_MON2_15			**Monitor input 2**
	IOM_REF2_15			**Reference input 2**
	QSPI0_SLSO9	O3		**Master slave select output**
	QSPI2_SLSO9	O4		**Master slave select output**
	CAN03_TXD	O5		**CAN transmit output node 3**
	IOM_MON2_8			**Monitor input 2**
	IOM_REF2_8			**Reference input 2**
	CAN21_TXD	O6		**CAN transmit output node 1**
	—	O7		**Reserved**
F17	P20.6	I	SLOW / PU1 / VEXT / ES	**General-purpose input**
	GTM_TIM6_IN0_1			**Mux input channel 0 of TIM module 6**
	GTM_TIM3_IN6_5			**Mux input channel 6 of TIM module 3**
	GTM_TIM2_IN6_5			**Mux input channel 6 of TIM module 2**
	CAN12_RXDA			**CAN receive input node 2**
	ASCLIN9_ARXE			**Receive input**
	P20.6	O0		**General-purpose output**
	GTM_TOUT62	O1		**GTM muxed output**
	ASCLIN1_ARTS	O2		**Ready to send output**
	QSPI0_SLSO8	O3		**Master slave select output**
	QSPI2_SLSO8	O4		**Master slave select output**
	—	O5		**Reserved**
	—	O6		**Reserved**
	—	O7		**Reserved**

Downloaded by IFXDMZ|par-zengzhe 12/02/2019 11:04:31

Table 2-51 Port 20 Functions (cont'd)

Ball	Symbol	Ctrl.	Buffer Type	Function
F19	P20.7	I	FAST / PU1 / VEXT / ES	**General-purpose input**
	GTM_TIM3_IN7_5			**Mux input channel 7 of TIM module 3**
	GTM_TIM2_IN7_5			**Mux input channel 7 of TIM module 2**
	GTM_TIM1_IN5_8			**Mux input channel 5 of TIM module 1**
	GTM_TIM6_IN1_1			**Mux input channel 1 of TIM module 6**
	CAN00_RXDB			**CAN receive input node 0**
	ASCLIN1_ACTSA			**Clear to send input**
	ASCLIN9_ARXF			**Receive input**
	SDMMC0_DAT0_IN			**read data in**
	P20.7	O0		**General-purpose output**
	GTM_TOUT63	O1		**GTM muxed output**
	ASCLIN9_ATX	O2		**Transmit output**
	—	O3		**Reserved**
	—	O4		**Reserved**
	CAN12_TXD	O5		**CAN transmit output node 2**
	—	O6		**Reserved**
	CCU61_COUT63	O7		**T13 PWM channel 63**
	IOM_MON1_7			**Monitor input 1**
	IOM_REF1_7			**Reference input 1**
	SDMMC0_DAT0	O		**write data out**
F20	P20.8	I	FAST / PU1 / VEXT / ES	**General-purpose input**
	GTM_TIM6_IN2_1			**Mux input channel 2 of TIM module 6**
	GTM_TIM1_IN7_3			**Mux input channel 7 of TIM module 1**
	GTM_TIM0_IN7_3			**Mux input channel 0 of TIM module 0**
	SDMMC0_DAT1_IN			**read data in**
	P20.8	O0		**General-purpose output**
	GTM_TOUT64	O1		**GTM muxed output**
	ASCLIN1_ASLSO	O2		**Slave select signal output**
	QSPI0_SLSO0	O3		**Master slave select output**
	QSPI1_SLSO0	O4		**Master slave select output**
	CAN00_TXD	O5		**CAN transmit output node 0**
	IOM_MON2_5			**Monitor input 2**
	IOM_REF2_5			**Reference input 2**
	—	O6		**Reserved**
	CCU61_CC60	O7		**T12 PWM channel 60**
	IOM_MON1_8			**Monitor input 1**
	IOM_REF1_13			**Reference input 1**
	SDMMC0_DAT1	O		**write data out**

Downloaded by IFXDMZ|par-zengzhe 12/02/2019 11:04:31

Table 2-51 Port 20 Functions (cont'd)

Ball	Symbol	Ctrl.	Buffer Type	Function
E17	P20.9	I	FAST / PU1 / VEXT / ES	**General-purpose input**
	GTM_TIM6_IN3_1			**Mux input channel 3 of TIM module 6**
	GTM_TIM3_IN5_5			**Mux input channel 5 of TIM module 3**
	GTM_TIM2_IN5_5			**Mux input channel 5 of TIM module 2**
	CAN03_RXDE			**CAN receive input node 3**
	ASCLIN1_ARXC			**Receive input**
	QSPI0_SLSIB			**Slave select input**
	SCU_E_REQ7_0			**ERU Channel 7 inputs 0 to 5 (0 is the LSB and 5 is the MSB)**
	P20.9	O0		**General-purpose output**
	GTM_TOUT65	O1		**GTM muxed output**
	—	O2		**Reserved**
	QSPI0_SLSO1	O3		**Master slave select output**
	QSPI1_SLSO1	O4		**Master slave select output**
	—	O5		**Reserved**
	—	O6		**Reserved**
	CCU61_CC61	O7		**T12 PWM channel 61**
	IOM_MON1_9			**Monitor input 1**
	IOM_REF1_12			**Reference input 1**
E19	P20.10	I	FAST / PU1 / VEXT / ES	**General-purpose input**
	GTM_TIM3_IN6_6			**Mux input channel 6 of TIM module 3**
	GTM_TIM2_IN6_6			**Mux input channel 6 of TIM module 2**
	SDMMC0_DAT2_IN			**read data in**
	P20.10	O0		**General-purpose output**
	GTM_TOUT66	O1		**GTM muxed output**
	ASCLIN1_ATX	O2		**Transmit output**
	IOM_MON2_13			**Monitor input 2**
	IOM_REF2_13			**Reference input 2**
	QSPI0_SLSO6	O3		**Master slave select output**
	QSPI2_SLSO7	O4		**Master slave select output**
	CAN03_TXD	O5		**CAN transmit output node 3**
	IOM_MON2_8			**Monitor input 2**
	IOM_REF2_8			**Reference input 2**
	ASCLIN1_ASCLK	O6		**Shift clock output**
	CCU61_CC62	O7		**T12 PWM channel 62**
	IOM_MON1_10			**Monitor input 1**
	IOM_REF1_11			**Reference input 1**
	SDMMC0_DAT2	O		**write data out**

Downloaded by IFXDMZ|par-zengzhe 12/02/2019 11:04:31

Table 2-51 Port 20 Functions (cont'd)

Ball	Symbol	Ctrl.	Buffer Type	Function
E20	P20.11	I	FAST / PU1 / VEXT / ES	**General-purpose input**
	GTM_TIM3_IN7_6			**Mux input channel 7 of TIM module 3**
	GTM_TIM2_IN7_6			**Mux input channel 7 of TIM module 2**
	QSPI0_SCLKA			**Slave SPI clock inputs**
	SDMMC0_DAT3_IN			**read data in**
	P20.11	O0		**General-purpose output**
	GTM_TOUT67	O1		**GTM muxed output**
	—	O2		**Reserved**
	QSPI0_SCLK	O3		**Master SPI clock output**
	—	O4		**Reserved**
	—	O5		**Reserved**
	—	O6		**Reserved**
	CCU61_COUT60	O7		**T12 PWM channel 60**
	IOM_MON1_11			**Monitor input 1**
	IOM_REF1_10			**Reference input 1**
	SDMMC0_DAT3	O		**write data out**
D19	P20.12	I	FAST / PU1 / VEXT / ES	**General-purpose input**
	GTM_TIM3_IN0_5			**Mux input channel 0 of TIM module 3**
	GTM_TIM2_IN0_5			**Mux input channel 0 of TIM module 2**
	QSPI0_MRSTA			**Master SPI data input**
	SDMMC0_DAT4_IN			**read data in**
	IOM_PIN_13			**GPIO pad input to FPC**
	P20.12	O0		**General-purpose output**
	GTM_TOUT68	O1		**GTM muxed output**
	IOM_MON0_13			**Monitor input 0**
	—	O2		**Reserved**
	QSPI0_MRST	O3		**Slave SPI data output**
	IOM_MON2_0			**Monitor input 2**
	IOM_REF2_0			**Reference input 2**
	QSPI0_MTSR	O4		**Master SPI data output**
	—	O5		**Reserved**
	—	O6		**Reserved**
	CCU61_COUT61	O7		**T12 PWM channel 61**
	IOM_MON1_12			**Monitor input 1**
	IOM_REF1_9			**Reference input 1**
	SDMMC0_DAT4	O		**write data out**

Downloaded by IFXDMZ|par-zengzhe 12/02/2019 11:04:31

Table 2-51 Port 20 Functions (cont'd)

Ball	Symbol	Ctrl.	Buffer Type	Function
D20	P20.13	I	FAST / PU1 / VEXT / ES	**General-purpose input**
	GTM_TIM3_IN1_4			**Mux input channel 1 of TIM module 3**
	GTM_TIM2_IN1_4			**Mux input channel 1 of TIM module 2**
	QSPI0_SLSIA			**Slave select input**
	SDMMC0_DAT5_IN			**read data in**
	IOM_PIN_14			**GPIO pad input to FPC**
	P20.13	O0		**General-purpose output**
	GTM_TOUT69	O1		**GTM muxed output**
	IOM_MON0_14			**Monitor input 0**
	—	O2		**Reserved**
	QSPI0_SLSO2	O3		**Master slave select output**
	QSPI1_SLSO2	O4		**Master slave select output**
	QSPI0_SCLK	O5		**Master SPI clock output**
	—	O6		**Reserved**
	CCU61_COUT62	O7		**T12 PWM channel 62**
	IOM_MON1_13			**Monitor input 1**
	IOM_REF1_8			**Reference input 1**
	SDMMC0_DAT5	O		**write data out**
C20	P20.14	I	FAST / PU1 / VEXT / ES	**General-purpose input**
	GTM_TIM3_IN2_4			**Mux input channel 2 of TIM module 3**
	GTM_TIM2_IN2_4			**Mux input channel 2 of TIM module 2**
	QSPI0_MTSRA			**Save SPI data input**
	SDMMC0_DAT6_IN			**read data in**
	IOM_PIN_15			**GPIO pad input to FPC**
	P20.14	O0		**General-purpose output**
	GTM_TOUT70	O1		**GTM muxed output**
	IOM_MON0_15			**Monitor input 0**
	—	O2		**Reserved**
	QSPI0_MTSR	O3		**Master SPI data output**
	—	O4		**Reserved**
	—	O5		**Reserved**
	—	O6		**Reserved**
	—	O7		**Reserved**
	SDMMC0_DAT6	O		**write data out**

Downloaded by IFXDMZ|par-zengzhe 12/02/2019 11:04:31

Table 2-52 Port 21 Functions

Ball	Symbol	Ctrl.	Buffer Type	Function
K17	P21.0	I	LVDS_RX / FAST / PU1 / VEXT / ES	**General-purpose input**
	GTM_TIM4_IN0_11			**Mux input channel 0 of TIM module 4**
	GTM_TIM3_IN4_6			**Mux input channel 4 of TIM module 3**
	GTM_TIM2_IN4_6			**Mux input channel 4 of TIM module 2**
	QSPI4_MRSTDN			**Master SPI data input (LVDS N line)**
	DMU_FDEST			
	ASCLIN11_ARXC			**Receive input**
	HSCT1_RXDN			**Rx data**
	P21.0	O0		**General-purpose output**
	GTM_TOUT51	O1		**GTM muxed output**
	ASCLIN11_ATX	O2		**Transmit output**
	—	O3		**Reserved**
	—	O4		**Reserved**
	—	O5		**Reserved**
	—	O6		**Reserved**
	—	O7		**Reserved**
	HSM_HSM1	O		**Pin Output Value**
J17	P21.1	I	LVDS_RX / FAST / PU1 / VEXT / ES	**General-purpose input**
	GTM_TIM4_IN1_13			**Mux input channel 1 of TIM module 4**
	GTM_TIM3_IN5_6			**Mux input channel 5 of TIM module 3**
	GTM_TIM2_IN5_6			**Mux input channel 5 of TIM module 2**
	QSPI4_MRSTDP			**Master SPI data input (LVDS P line)**
	ASCLIN11_ARXD			**Receive input**
	HSCT1_RXDP			**Rx data**
	GTM_DTMA4_1			**CDTM4_DTM4**
	P21.1	O0		**General-purpose output**
	GTM_TOUT52	O1		**GTM muxed output**
	—	O2		**Reserved**
	—	O3		**Reserved**
	—	O4		**Reserved**
	—	O5		**Reserved**
	—	O6		**Reserved**
	—	O7		**Reserved**
	HSM_HSM2	O		**Pin Output Value**

Downloaded by IFXDMZ|par-zengzhe 12/02/2019 11:04:31

Table 2-52 Port 21 Functions (cont'd)

Ball	Symbol	Ctrl.	Buffer Type	Function
K19	P21.2	I	LVDS_RX / FAST / PU1 / VEXT / ES	**General-purpose input**
	GTM_TIM5_IN4_11			**Mux input channel 4 of TIM module 5**
	GTM_TIM1_IN0_7			**Mux input channel 0 of TIM module 1**
	GTM_TIM0_IN0_7			**Mux input channel 0 of TIM module 0**
	QSPI2_MRSTCN			**Master SPI data input (LVDS N line)**
	SCU_EMGSTOP_PORT_B			**Emergency stop Port Pin B input request**
	ASCLIN3_ARXGN			**Differential Receive input (low active)**
	HSCT0_RXDN			**Rx data**
	QSPI4_MRSTCN			**Master SPI data input (LVDS N line)**
	ASCLIN11_ARXE			**Receive input**
	GTM_DTMA1_0			**CDTM1_DTM4**
	P21.2	O0		**General-purpose output**
	GTM_TOUT53	O1		**GTM muxed output**
	ASCLIN3_ASLSO	O2		**Slave select signal output**
	—	O3		**Reserved**
	—	O4		**Reserved**
	GETH_MDC	O5		**MDIO clock**
	—	O6		**Reserved**
	—	O7		**Reserved**
J19	P21.3	I	LVDS_RX / FAST / PU1 / VEXT / ES	**General-purpose input**
	GTM_TIM5_IN5_12			**Mux input channel 5 of TIM module 5**
	GTM_TIM1_IN1_6			**Mux input channel 1 of TIM module 1**
	GTM_TIM0_IN1_6			**Mux input channel 1 of TIM module 0**
	QSPI2_MRSTCP			**Master SPI data input (LVDS P line)**
	ASCLIN3_ARXGP			**Differential Receive input (high active)**
	GETH_MDIOD			**MDIO Input**
	HSCT0_RXDP			**Rx data**
	QSPI4_MRSTCP			**Master SPI data input (LVDS P line)**
	P21.3	O0		**General-purpose output**
	GTM_TOUT54	O1		**GTM muxed output**
	ASCLIN11_ASCLK	O2		**Shift clock output**
	—	O3		**Reserved**
	—	O4		**Reserved**
	—	O5		**Reserved**
	—	O6		**Reserved**
	—	O7		**Reserved**
	GETH_MDIO	O		**MDIO Output**

Downloaded by IFXDMZ\par-zengzhe 12/02/2019 11:04:31

Table 2-52 Port 21 Functions (cont'd)

Ball	Symbol	Ctrl.	Buffer Type	Function
K20	P21.4	I	LVDS_TX / FAST / PU1 / VEXT / ES6	**General-purpose input**
	GTM_TIM5_IN6_12			**Mux input channel 6 of TIM module 5**
	GTM_TIM1_IN2_6			**Mux input channel 2 of TIM module 1**
	GTM_TIM0_IN2_6			**Mux input channel 2 of TIM module 0**
	P21.4	O0		**General-purpose output**
	GTM_TOUT55	O1		**GTM muxed output**
	ASCLIN11_ASLSO	O2		**Slave select signal output**
	—	O3		**Reserved**
	—	O4		**Reserved**
	—	O5		**Reserved**
	—	O6		**Reserved**
	—	O7		**Reserved**
	HSCT0_TXDN	O		**Tx data**
J20	P21.5	I	LVDS_TX / FAST / PU1 / VEXT / ES6	**General-purpose input**
	GTM_TIM5_IN7_11			**Mux input channel 7 of TIM module 5**
	GTM_TIM1_IN3_6			**Mux input channel 3 of TIM module 1**
	GTM_TIM0_IN3_6			**Mux input channel 3 of TIM module 0**
	ASCLIN11_ARXF			**Receive input**
	P21.5	O0		**General-purpose output**
	GTM_TOUT56	O1		**GTM muxed output**
	ASCLIN3_ASCLK	O2		**Shift clock output**
	ASCLIN11_ATX	O3		**Transmit output**
	—	O4		**Reserved**
	—	O5		**Reserved**
	—	O6		**Reserved**
	—	O7		**Reserved**
	HSCT0_TXDP	O		**Tx data**

Downloaded by IFXDMZ|par-zengzhe 12/02/2019 11:04:31

Table 2-52 Port 21 Functions (cont'd)

Ball	Symbol	Ctrl.	Buffer Type	Function
H17	P21.6/TDI	I	FAST / PD / PU2 / VEXT / ES3	**General-purpose input** PD during Reset and in DAP/DAPE or JTAG mode. After Reset release and when not in DAP/DAPE or JTAG mode: PU. In Standby mode: HighZ.
	GTM_TIM4_IN2_12			**Mux input channel 2 of TIM module 4**
	GTM_TIM1_IN4_8			**Mux input channel 4 of TIM module 1**
	GTM_TIM0_IN4_8			**Mux input channel 4 of TIM module 0**
	GPT120_T5EUDA			**Count direction control input of timer T5**
	ASCLIN3_ARXF			**Receive input**
	CBS_TGI2			**Trigger input**
	TDI			**JTAG Module Data Input**
	P21.6	O0		**General-purpose output**
	GTM_TOUT57	O1		**GTM muxed output**
	ASCLIN3_ASLSO	O2		**Slave select signal output**
	—	O3		**Reserved**
	—	O4		**Reserved**
	—	O5		**Reserved**
	—	O6		**Reserved**
	GPT120_T3OUT	O7		**External output for overflow/underflow detection of core timer T3**
	CBS_TGO2	O		**Trigger output**
	DAP3	I/O		**DAP: DAP3 Data I/O**
	DAPE1	I/O		**DAPE: DAPE1 Data I/O**

Downloaded by IFXDMZlpar-zengzhe 12/02/2019 11:04:31

Table 2-52 Port 21 Functions (cont'd)

Ball	Symbol	Ctrl.	Buffer Type	Function
H16	P21.7/TDO	I	FAST / PU2 / VEXT / ES4	**General-purpose input**
	GTM_TIM4_IN3_12			**Mux input channel 3 of TIM module 4**
	GTM_TIM1_IN5_7			**Mux input channel 5 of TIM module 1**
	GTM_TIM0_IN5_7			**Mux input channel 5 of TIM module 0**
	GPT120_T5INA			**Trigger/gate input of timer T5**
	CBS_TGI3			**Trigger input**
	GETH_RXERB			**Receive Error MII**
	P21.7	O0		**General-purpose output**
	GTM_TOUT58	O1		**GTM muxed output**
	ASCLIN3_ATX	O2		**Transmit output**
	IOM_MON2_15			**Monitor input 2**
	IOM_REF2_15			**Reference input 2**
	ASCLIN3_ASCLK	O3		**Shift clock output**
	—	O4		**Reserved**
	—	O5		**Reserved**
	—	O6		**Reserved**
	GPT120_T6OUT	O7		**External output for overflow/underflow detection of core timer T6**
	CBS_TGO3	O		**Trigger output**
	DAP2	I/O		**DAP: DAP2 Data I/O**
	DAPE2	I/O		**DAPE: DAPE2 Data I/O**
	TDO	O		**JTAG Module Data Output**

Downloaded by IFXDMZ|par-zengzhe 12/02/2019 11:04:31

Table 2-53 Port 22 Functions

Ball	Symbol	Ctrl.	Buffer Type	Function
P20	P22.0	I	LVDS_TX / FAST / PU1 / VEXT / ES6	General-purpose input
	GTM_TIM7_IN3_1			Mux input channel 3 of TIM module 7
	GTM_TIM1_IN1_7			Mux input channel 1 of TIM module 1
	GTM_TIM0_IN1_7			Mux input channel 1 of TIM module 0
	QSPI4_MTSRB			Save SPI data input
	ASCLIN6_ARXE			Receive input
	P22.0	O0		General-purpose output
	GTM_TOUT47	O1		GTM muxed output
	ASCLIN3_ATXN	O2		Differential Transmit output (low active)
	QSPI4_MTSR	O3		Master SPI data output
	QSPI4_SCLKN	O4		Master SPI clock output (LVDS N line)
	MSC1_FCLN	O5		Shift-clock inverted part of the differential signal
	—	O6		Reserved
	ASCLIN6_ATX	O7		Transmit output
P19	P22.1	I	LVDS_TX / FAST / PU1 / VEXT / ES6	General-purpose input
	GTM_TIM7_IN2_1			Mux input channel 2 of TIM module 7
	GTM_TIM1_IN0_8			Mux input channel 0 of TIM module 1
	GTM_TIM0_IN0_8			Mux input channel 0 of TIM module 0
	QSPI4_MRSTB			Master SPI data input
	ASCLIN7_ARXE			Receive input
	P22.1	O0		General-purpose output
	GTM_TOUT48	O1		GTM muxed output
	ASCLIN3_ATXP	O2		Differential Transmit output (high active)
	QSPI4_MRST	O3		Slave SPI data output
	IOM_MON2_4			Monitor input 2
	IOM_REF2_4			Reference input 2
	QSPI4_SCLKP	O4		Master SPI clock output (LVDS P line)
	MSC1_FCLP	O5		Shift-clock direct part of the differential signal
	—	O6		Reserved
	ASCLIN7_ATX	O7		Transmit output

Downloaded by IFXDMZlpar-zengzhe 12/02/2019 11:04:31

Table 2-53 Port 22 Functions (cont'd)

Ball	Symbol	Ctrl.	Buffer Type	Function
R20	P22.2	I	LVDS_TX / FAST / PU1 / VEXT / ES6	**General-purpose input**
	GTM_TIM7_IN1_1			**Mux input channel 1 of TIM module 7**
	GTM_TIM1_IN3_7			**Mux input channel 3 of TIM module 1**
	GTM_TIM0_IN3_7			**Mux input channel 3 of TIM module 0**
	QSPI4_SLSIB			**Slave select input**
	P22.2	O0		**General-purpose output**
	GTM_TOUT49	O1		**GTM muxed output**
	ASCLIN5_ATX	O2		**Transmit output**
	QSPI4_SLSO3	O3		**Master slave select output**
	QSPI4_MTSRN	O4		**Master SPI data output (LVDS N line)**
	MSC1_SON	O5		**Data output - inverted part of the differential signal**
	—	O6		**Reserved**
	—	O7		**Reserved**
	HSCT1_TXDN	O		**Tx data**
R19	P22.3	I	LVDS_TX / FAST / PU1 / VEXT / ES6	**General-purpose input**
	GTM_TIM7_IN0_1			**Mux input channel 0 of TIM module 7**
	GTM_TIM1_IN4_4			**Mux input channel 4 of TIM module 1**
	GTM_TIM0_IN4_4			**Mux input channel 4 of TIM module 0**
	QSPI4_SCLKB			**Slave SPI clock inputs**
	ASCLIN5_ARXC			**Receive input**
	P22.3	O0		**General-purpose output**
	GTM_TOUT50	O1		**GTM muxed output**
	—	O2		**Reserved**
	QSPI4_SCLK	O3		**Master SPI clock output**
	QSPI4_MTSRP	O4		**Master SPI data output (LVDS P line)**
	MSC1_SOP	O5		**Data output - direct part of the differential signal**
	—	O6		**Reserved**
	HSPDM_MUTE	O7		**Mute output to tx**
	HSCT1_TXDP	O		**Tx data**

Downloaded by IFXDMZ|par-zengzhe 12/02/2019 11:04:31

Table 2-53 Port 22 Functions (cont'd)

Ball	Symbol	Ctrl.	Buffer Type	Function
P16	P22.4	I	FAST / PU1 / VEXT / ES	**General-purpose input**
	GTM_TIM3_IN0_8			**Mux input channel 0 of TIM module 3**
	ASCLIN7_ARXF			**Receive input**
	GTM_DTMA3_0			**CDTM3_DTM4**
	P22.4	O0		**General-purpose output**
	GTM_TOUT130	O1		**GTM muxed output**
	ASCLIN4_ASLSO	O2		**Slave select signal output**
	—	O3		**Reserved**
	QSPI0_SLSO12	O4		**Master slave select output**
	—	O5		**Reserved**
	CAN13_TXD	O6		**CAN transmit output node 3**
	HSPDM_BS0_OUT	O7		**Bit stream 0 output**
P17	P22.5	I	FAST / PU1 / VEXT / ES	**General-purpose input**
	GTM_TIM3_IN1_7			**Mux input channel 1 of TIM module 3**
	QSPI0_MTSRC			**Save SPI data input**
	CAN13_RXDC			**CAN receive input node 3**
	P22.5	O0		**General-purpose output**
	GTM_TOUT131	O1		**GTM muxed output**
	ASCLIN4_ATX	O2		**Transmit output**
	—	O3		**Reserved**
	QSPI0_MTSR	O4		**Master SPI data output**
	—	O5		**Reserved**
	—	O6		**Reserved**
	HSPDM_BS1_OUT	O7		**Bit stream 1 output**

Downloaded by IFXDMZ|par-zengzhe 12/02/2019 11:04:31

Table 2-53 Port 22 Functions (cont'd)

Ball	Symbol	Ctrl.	Buffer Type	Function
N16	P22.6	I	SLOW / PU1 / VEXT / ES	**General-purpose input**
	GTM_TIM3_IN2_6			**Mux input channel 2 of TIM module 3**
	GTM_TIM2_IN6_14			**Mux input channel 6 of TIM module 2**
	QSPI0_MRSTC			**Master SPI data input**
	ASCLIN4_ARXC			**Receive input**
	P22.6	O0		**General-purpose output**
	GTM_TOUT132	O1		**GTM muxed output**
	—	O2		**Reserved**
	—	O3		**Reserved**
	QSPI0_MRST	O4		**Slave SPI data output**
	IOM_MON2_0			**Monitor input 2**
	IOM_REF2_0			**Reference input 2**
	CAN21_TXD	O5		**CAN transmit output node 1**
	—	O6		**Reserved**
	—	O7		**Reserved**
N17	P22.7	I	SLOW / PU1 / VEXT / ES	**General-purpose input**
	GTM_TIM3_IN3_7			**Mux input channel 3 of TIM module 3**
	QSPI0_SCLKC			**Slave SPI clock inputs**
	CAN21_RXDF			**CAN receive input node 1**
	P22.7	O0		**General-purpose output**
	GTM_TOUT133	O1		**GTM muxed output**
	ASCLIN4_ASCLK	O2		**Shift clock output**
	—	O3		**Reserved**
	QSPI0_SCLK	O4		**Master SPI clock output**
	—	O5		**Reserved**
	—	O6		**Reserved**
	—	O7		**Reserved**

Downloaded by IFXDMZ|par-zengzhe 12/02/2019 11:04:31

Table 2-53 Port 22 Functions (cont'd)

Ball	Symbol	Ctrl.	Buffer Type	Function
M16	P22.8	I	SLOW / PU1 / VEXT / ES	**General-purpose input**
	GTM_TIM5_IN0_4			**Mux input channel 0 of TIM module 5**
	GTM_TIM3_IN4_7			**Mux input channel 4 of TIM module 3**
	QSPI0_SCLKB			**Slave SPI clock inputs**
	P22.8	O0		**General-purpose output**
	GTM_TOUT134	O1		**GTM muxed output**
	ASCLIN5_ASCLK	O2		**Shift clock output**
	—	O3		**Reserved**
	QSPI0_SCLK	O4		**Master SPI clock output**
	CAN22_TXD	O5		**CAN transmit output node 2**
	—	O6		**Reserved**
	—	O7		**Reserved**
M17	P22.9	I	SLOW / PU1 / VEXT / ES	**General-purpose input**
	GTM_TIM5_IN1_10			**Mux input channel 1 of TIM module 5**
	GTM_TIM3_IN5_7			**Mux input channel 5 of TIM module 3**
	QSPI0_MRSTB			**Master SPI data input**
	ASCLIN4_ARXD			**Receive input**
	CAN22_RXDE			**CAN receive input node 2**
	GTM_DTMA3_1			**CDTM3_DTM4**
	P22.9	O0		**General-purpose output**
	GTM_TOUT135	O1		**GTM muxed output**
	—	O2		**Reserved**
	—	O3		**Reserved**
	QSPI0_MRST	O4		**Slave SPI data output**
	IOM_MON2_0			**Monitor input 2**
	IOM_REF2_0			**Reference input 2**
	—	O5		**Reserved**
	—	O6		**Reserved**
	—	O7		**Reserved**

Downloaded by IFXDMZlpar-zengzhe 12/02/2019 11:04:31

Table 2-53 Port 22 Functions (cont'd)

Ball	Symbol	Ctrl.	Buffer Type	Function
L16	P22.10	I	SLOW / PU1 / VEXT / ES	**General-purpose input**
	GTM_TIM5_IN2_8			**Mux input channel 2 of TIM module 5**
	GTM_TIM3_IN6_7			**Mux input channel 6 of TIM module 3**
	QSPI0_MTSRB			**Save SPI data input**
	P22.10	O0		**General-purpose output**
	GTM_TOUT136	O1		**GTM muxed output**
	ASCLIN4_ATX	O2		**Transmit output**
	—	O3		**Reserved**
	QSPI0_MTSR	O4		**Master SPI data output**
	CAN23_TXD	O5		**CAN transmit output node 3**
	—	O6		**Reserved**
	—	O7		**Reserved**
L17	P22.11	I	SLOW / PU1 / VEXT / ES	**General-purpose input**
	GTM_TIM5_IN3_10			**Mux input channel 3 of TIM module 5**
	GTM_TIM3_IN7_7			**Mux input channel 7 of TIM module 3**
	CAN23_RXDE			**CAN receive input node 3**
	P22.11	O0		**General-purpose output**
	GTM_TOUT137	O1		**GTM muxed output**
	ASCLIN4_ASLSO	O2		**Slave select signal output**
	—	O3		**Reserved**
	QSPI0_SLSO10	O4		**Master slave select output**
	—	O5		**Reserved**
	—	O6		**Reserved**
	—	O7		**Reserved**

Downloaded by IFXDMZ|par-zengzhe 12/02/2019 11:04:31

Table 2-54 Port 23 Functions

Ball	Symbol	Ctrl.	Buffer Type	Function
V20	P23.0	I	SLOW / PU1 / VEXT / ES	**General-purpose input**
	GTM_TIM6_IN7_1			**Mux input channel 7 of TIM module 6**
	GTM_TIM1_IN5_4			**Mux input channel 5 of TIM module 1**
	GTM_TIM0_IN5_4			**Mux input channel 5 of TIM module 0**
	CAN10_RXDC			**CAN receive input node 0**
	P23.0	O0		**General-purpose output**
	GTM_TOUT41	O1		**GTM muxed output**
	—	O2		**Reserved**
	—	O3		**Reserved**
	—	O4		**Reserved**
	—	O5		**Reserved**
	—	O6		**Reserved**
	—	O7		**Reserved**
U19	P23.1	I	FAST / PU1 / VEXT / ES	**General-purpose input**
	GTM_TIM6_IN6_1			**Mux input channel 6 of TIM module 6**
	GTM_TIM1_IN6_4			**Mux input channel 6 of TIM module 1**
	GTM_TIM0_IN6_4			**Mux input channel 6 of TIM module 0**
	MSC1_SDI0			**Upstream assynchronous input signal**
	ASCLIN6_ARXF			**Receive input**
	P23.1	O0		**General-purpose output**
	GTM_TOUT42	O1		**GTM muxed output**
	ASCLIN1_ARTS	O2		**Ready to send output**
	QSPI4_SLSO6	O3		**Master slave select output**
	GTM_CLK0	O4		**CGM generated clock**
	CAN10_TXD	O5		**CAN transmit output node 0**
	CCU_EXTCLK0	O6		**CCU external clock**
	ASCLIN6_ASCLK	O7		**Shift clock output**

Downloaded by IFXDMZ|par-zengzhe 12/02/2019 11:04:31

Table 2-54 Port 23 Functions (cont'd)

Ball	Symbol	Ctrl.	Buffer Type	Function
U20	P23.2	I	SLOW / PU1 / VEXT / ES	**General-purpose input**
	GTM_TIM6_IN5_1			**Mux input channel 5 of TIM module 6**
	GTM_TIM1_IN6_5			**Mux input channel 6 of TIM module 1**
	GTM_TIM0_IN6_5			**Mux input channel 6 of TIM module 0**
	ASCLIN7_ARXC			**Receive input**
	P23.2	O0		**General-purpose output**
	GTM_TOUT43	O1		**GTM muxed output**
	—	O2		**Reserved**
	—	O3		**Reserved**
	CAN23_TXD	O4		**CAN transmit output node 3**
	CAN12_TXD	O5		**CAN transmit output node 2**
	—	O6		**Reserved**
	—	O7		**Reserved**
T19	P23.3	I	SLOW / PU1 / VEXT / ES	**General-purpose input**
	GTM_TIM6_IN4_2			**Mux input channel 4 of TIM module 6**
	GTM_TIM1_IN7_4			**Mux input channel 7 of TIM module 1**
	GTM_TIM0_IN7_4			**Mux input channel 0 of TIM module 0**
	MSC1_INJ0			**Injection signal from port**
	ASCLIN6_ARXA			**Receive input**
	CAN12_RXDC			**CAN receive input node 2**
	CAN23_RXDB			**CAN receive input node 3**
	P23.3	O0		**General-purpose output**
	GTM_TOUT44	O1		**GTM muxed output**
	ASCLIN7_ATX	O2		**Transmit output**
	—	O3		**Reserved**
	—	O4		**Reserved**
	—	O5		**Reserved**
	—	O6		**Reserved**
	—	O7		**Reserved**

Downloaded by IFXDMZ|par-zengzhe 12/02/2019 11:04:31

Table 2-54 Port 23 Functions (cont'd)

Ball	Symbol	Ctrl.	Buffer Type	Function
T20	P23.4	I	FAST / PU1 / VEXT / ES	**General-purpose input**
	GTM_TIM6_IN3_2			**Mux input channel 3 of TIM module 6**
	GTM_TIM1_IN7_5			**Mux input channel 7 of TIM module 1**
	GTM_TIM0_IN7_5			**Mux input channel 0 of TIM module 0**
	P23.4	O0		**General-purpose output**
	GTM_TOUT45	O1		**GTM muxed output**
	ASCLIN6_ASLSO	O2		**Slave select signal output**
	QSPI4_SLSO5	O3		**Master slave select output**
	—	O4		**Reserved**
	MSC1_EN0	O5		**Chip Select**
	—	O6		**Reserved**
	—	O7		**Reserved**
T17	P23.5	I	FAST / PU1 / VEXT / ES	**General-purpose input**
	GTM_TIM6_IN2_2			**Mux input channel 2 of TIM module 6**
	GTM_TIM1_IN2_7			**Mux input channel 2 of TIM module 1**
	GTM_TIM0_IN2_7			**Mux input channel 2 of TIM module 0**
	P23.5	O0		**General-purpose output**
	GTM_TOUT46	O1		**GTM muxed output**
	ASCLIN6_ATX	O2		**Transmit output**
	QSPI4_SLSO4	O3		**Master slave select output**
	—	O4		**Reserved**
	MSC1_EN1	O5		**Chip Select**
	CAN22_TXD	O6		**CAN transmit output node 2**
	—	O7		**Reserved**
R17	P23.6	I	SLOW / PU1 / VEXT / ES	**General-purpose input**
	GTM_TIM6_IN1_2			**Mux input channel 1 of TIM module 6**
	GTM_TIM4_IN2_7			**Mux input channel 2 of TIM module 4**
	GTM_TIM1_IN2_10			**Mux input channel 2 of TIM module 1**
	CAN22_RXDC			**CAN receive input node 2**
	P23.6	O0		**General-purpose output**
	GTM_TOUT138	O1		**GTM muxed output**
	—	O2		**Reserved**
	—	O3		**Reserved**
	QSPI0_SLSO11	O4		**Master slave select output**
	CAN11_TXD	O5		**CAN transmit output node 1**
	—	O6		**Reserved**
	—	O7		**Reserved**

Downloaded by IFXDMZlpar-zengzhe 12/02/2019 11:04:31

Table 2-54 Port 23 Functions (cont'd)

Ball	Symbol	Ctrl.	Buffer Type	Function
R16	P23.7	I	SLOW / PU1 / VEXT / ES	**General-purpose input**
	GTM_TIM6_IN0_2			**Mux input channel 0 of TIM module 6**
	GTM_TIM4_IN3_7			**Mux input channel 3 of TIM module 4**
	GTM_TIM1_IN3_10			**Mux input channel 3 of TIM module 1**
	CAN11_RXDC			**CAN receive input node 1**
	P23.7	O0		**General-purpose output**
	GTM_TOUT139	O1		**GTM muxed output**
	—	O2		**Reserved**
	—	O3		**Reserved**
	—	O4		**Reserved**
	—	O5		**Reserved**
	—	O6		**Reserved**
	—	O7		**Reserved**

Table 2-55 Port 32 Functions

Ball	Symbol	Ctrl.	Buffer Type	Function
Y17	P32.0/VGATE1N	I	SLOW / PU1 / VEXT / ES	**General-purpose input** P32.0 / SMPS mode: analog output. External Pass Device gate control for EVRC
	GTM_TIM3_IN2_5			**Mux input channel 2 of TIM module 3**
	GTM_TIM2_IN2_5			**Mux input channel 2 of TIM module 2**
	P32.0	O0		**General-purpose output**
	GTM_TOUT36	O1		**GTM muxed output**
	—	O2		**Reserved**
	—	O3		**Reserved**
	—	O4		**Reserved**
	—	O5		**Reserved**
	—	O6		**Reserved**
	—	O7		**Reserved**

Downloaded by IFXDMZlpar-zengzhe 12/02/2019 11:04:31

Table 2-55 Port 32 Functions (cont'd)

Ball	Symbol	Ctrl.	Buffer Type	Function
W17	P32.1/VGATE1P	I	SLOW / PU1 / VEXT / ES	**General-purpose input** P32.1 / External Pass Device gate control for EVRC
	GTM_TIM3_IN3_15			**Mux input channel 3 of TIM module 3**
	P32.1	O0		**General-purpose output**
	GTM_TOUT37	O1		**GTM muxed output**
	—	O2		**Reserved**
	—	O3		**Reserved**
	—	O4		**Reserved**
	—	O5		**Reserved**
	—	O6		**Reserved**
	—	O7		**Reserved**
Y18	P32.2	I	SLOW / PU1 / VEXT / ES	**General-purpose input**
	GTM_TIM1_IN3_8			**Mux input channel 3 of TIM module 1**
	GTM_TIM0_IN3_8			**Mux input channel 3 of TIM module 0**
	CAN03_RXDB			**CAN receive input node 3**
	ASCLIN3_ARXD			**Receive input**
	CAN21_RXDD			**CAN receive input node 1**
	P32.2	O0		**General-purpose output**
	GTM_TOUT38	O1		**GTM muxed output**
	ASCLIN3_ATX	O2		**Transmit output**
	IOM_MON2_15			**Monitor input 2**
	IOM_REF2_15			**Reference input 2**
	—	O3		**Reserved**
	—	O4		**Reserved**
	—	O5		**Reserved**
	PMS_DCDCSYNCO	O6		**DCDC sync output**
	—	O7		**Reserved**

Downloaded by IFXDMZlpar-zengzhe 12/02/2019 11:04:31

Table 2-55 Port 32 Functions (cont'd)

Ball	Symbol	Ctrl.	Buffer Type	Function
Y19	P32.3	I	SLOW / PU1 / VEXT / ES	**General-purpose input**
	GTM_TIM1_IN4_5			**Mux input channel 4 of TIM module 1**
	GTM_TIM0_IN4_5			**Mux input channel 4 of TIM module 0**
	P32.3	O0		**General-purpose output**
	GTM_TOUT39	O1		**GTM muxed output**
	ASCLIN3_ATX	O2		**Transmit output**
	IOM_MON2_15			**Monitor input 2**
	IOM_REF2_15			**Reference input 2**
	—	O3		**Reserved**
	ASCLIN3_ASCLK	O4		**Shift clock output**
	CAN03_TXD	O5		**CAN transmit output node 3**
	IOM_MON2_8			**Monitor input 2**
	IOM_REF2_8			**Reference input 2**
	CAN21_TXD	O6		**CAN transmit output node 1**
	—	O7		**Reserved**
W18	P32.4	I	FAST / PU1 / VEXT / ES	**General-purpose input**
	GTM_TIM1_IN5_5			**Mux input channel 5 of TIM module 1**
	GTM_TIM0_IN5_5			**Mux input channel 5 of TIM module 0**
	ASCLIN1_ACTSB			**Clear to send input**
	MSC1_SDI2			**Upstream assynchronous input signal**
	P32.4	O0		**General-purpose output**
	GTM_TOUT40	O1		**GTM muxed output**
	—	O2		**Reserved**
	—	O3		**Reserved**
	GTM_CLK1	O4		**CGM generated clock**
	MSC1_EN0	O5		**Chip Select**
	CCU_EXTCLK1	O6		**CCU external clock**
	CCU60_COUT63	O7		**T13 PWM channel 63**
	IOM_MON1_6			**Monitor input 1**
	IOM_REF1_0			**Reference input 1**
	PMS_DCDCSYNCO	O		**DCDC sync output**

Downloaded by IFXDMZ|par-zengzhe 12/02/2019 11:04:31

Table 2-55 Port 32 Functions (cont'd)

Ball	Symbol	Ctrl.	Buffer Type	Function
T15	P32.5	I	SLOW / PU1 / VEXT / ES	**General-purpose input**
	GTM_TIM5_IN5_9			**Mux input channel 5 of TIM module 5**
	GTM_TIM4_IN1_14			**Mux input channel 1 of TIM module 4**
	GTM_TIM3_IN5_8			**Mux input channel 5 of TIM module 3**
	SENT_SENT10C			**Receive input channel 10**
	P32.5	O0		**General-purpose output**
	GTM_TOUT140	O1		**GTM muxed output**
	ASCLIN2_ATX	O2		**Transmit output**
	IOM_MON2_14			**Monitor input 2**
	IOM_REF2_14			**Reference input 2**
	—	O3		**Reserved**
	—	O4		**Reserved**
	—	O5		**Reserved**
	CAN02_TXD	O6		**CAN transmit output node 2**
	IOM_MON2_7			**Monitor input 2**
	IOM_REF2_7			**Reference input 2**
	—	O7		**Reserved**
U15	P32.6	I	SLOW / PU1 / VEXT / ES	**General-purpose input**
	GTM_TIM5_IN6_9			**Mux input channel 6 of TIM module 5**
	GTM_TIM4_IN4_15			**Mux input channel 4 of TIM module 4**
	GTM_TIM3_IN6_8			**Mux input channel 6 of TIM module 3**
	CAN02_RXDC			**CAN receive input node 2**
	CBS_TGI4			**Trigger input**
	ASCLIN2_ARXF			**Receive input**
	ASCLIN6_ARXC			**Receive input**
	SENT_SENT11C			**Receive input channel 11**
	P32.6	O0		**General-purpose output**
	GTM_TOUT141	O1		**GTM muxed output**
	—	O2		**Reserved**
	—	O3		**Reserved**
	QSPI2_SLSO12	O4		**Master slave select output**
	CAN22_TXD	O5		**CAN transmit output node 2**
	—	O6		**Reserved**
	—	O7		**Reserved**
	CBS_TGO4	O		**Trigger output**

Downloaded by IFXDMZlpar-zengzhe 12/02/2019 11:04:31

Table 2-55 Port 32 Functions (cont'd)

Ball	Symbol	Ctrl.	Buffer Type	Function
U16	P32.7	I	SLOW / PU1 / VEXT / ES	**General-purpose input**
	GTM_TIM5_IN7_8			**Mux input channel 7 of TIM module 5**
	GTM_TIM4_IN0_15			**Mux input channel 0 of TIM module 4**
	GTM_TIM3_IN7_8			**Mux input channel 7 of TIM module 3**
	CBS_TGI5			**Trigger input**
	CAN22_RXDB			**CAN receive input node 2**
	SENT_SENT12C			**Receive input channel 12**
	P32.7	O0		**General-purpose output**
	GTM_TOUT142	O1		**GTM muxed output**
	ASCLIN6_ATX	O2		**Transmit output**
	—	O3		**Reserved**
	—	O4		**Reserved**
	—	O5		**Reserved**
	—	O6		**Reserved**
	—	O7		**Reserved**
	CBS_TGO5	O		**Trigger output**

Downloaded by IFXDMZ|par-zengzhe 12/02/2019 11:04:31

Table 2-56 Port 33 Functions

Ball	Symbol	Ctrl.	Buffer Type	Function
W10	P33.0	I	SLOW / PU1 / VEVRSB / ES5	**General-purpose input**
	GTM_TIM3_IN0_13			**Mux input channel 0 of TIM module 3**
	GTM_TIM1_IN4_6			**Mux input channel 4 of TIM module 1**
	GTM_TIM0_IN4_6			**Mux input channel 4 of TIM module 0**
	EDSADC_ITR0E			**Trigger/Gate input**
	SENT_SENT13C			**Receive input channel 13**
	IOM_PIN_0			**GPIO pad input to FPC**
	GTM_DTMT1_2			**CDTM1_DTM0**
	EVADC_G10CH7	AI		**Analog input channel 7, group 10**
	EVADC_FC7CH0			**Analog input FC channel 7**
	P33.0	O0		**General-purpose output**
	GTM_TOUT22	O1		**GTM muxed output**
	IOM_MON0_0			**Monitor input 0**
	IOM_GTM_0			**GTM-provided inputs to EXOR combiner**
	ASCLIN5_ATX	O2		**Transmit output**
	—	O3		**Reserved**
	—	O4		**Reserved**
	—	O5		**Reserved**
	EVADC_FC2BFLOUT	O6		**Boundary flag output, FC channel 2**
	—	O7		**Reserved**

Downloaded by IFXDMZlpar-zengzhe 12/02/2019 11:04:31

Table 2-56 Port 33 Functions (cont'd)

Ball	Symbol	Ctrl.	Buffer Type	Function
Y10	P33.1	I	SLOW / PU1 / VEVRSB / ES5	**General-purpose input**
	GTM_TIM3_IN1_15			**Mux input channel 1 of TIM module 3**
	GTM_TIM1_IN5_6			**Mux input channel 5 of TIM module 1**
	GTM_TIM0_IN5_6			**Mux input channel 5 of TIM module 0**
	EDSADC_ITR1E			**Trigger/Gate input**
	PSI5_RX0C			**RXD inputs (receive data) channel 0**
	EDSADC_DSCIN2B			**Modulator clock input**
	SENT_SENT9C			**Receive input channel 9**
	ASCLIN8_ARXC			**Receive input**
	IOM_PIN_1			**GPIO pad input to FPC**
	EVADC_G10CH6	AI		**Analog input channel 6, group 10**
	EVADC_FC6CH0			**Analog input FC channel 6**
	P33.1	O0		**General-purpose output**
	GTM_TOUT23	O1		**GTM muxed output**
	IOM_MON0_1			**Monitor input 0**
	IOM_GTM_1			**GTM-provided inputs to EXOR combiner**
	ASCLIN3_ASLSO	O2		**Slave select signal output**
	QSPI2_SCLK	O3		**Master SPI clock output**
	EDSADC_DSCOUT2	O4		**Modulator clock output**
	EVADC_EMUX02	O5		**Control of external analog multiplexer interface 0**
	EVADC_FC4BFLOUT	O6		**Boundary flag output, FC channel 4**
	—	O7		**Reserved**

Downloaded by IFXDMZ|par-zengzhe 12/02/2019 11:04:31

Table 2-56 Port 33 Functions (cont'd)

Ball	Symbol	Ctrl.	Buffer Type	Function
W11	P33.2	I	SLOW / PU1 / VEVRSB / ES5	**General-purpose input**
	GTM_TIM3_IN2_14			**Mux input channel 2 of TIM module 3**
	GTM_TIM1_IN6_6			**Mux input channel 6 of TIM module 1**
	GTM_TIM0_IN6_6			**Mux input channel 6 of TIM module 0**
	EDSADC_ITR2E			**Trigger/Gate input**
	SENT_SENT8C			**Receive input channel 8**
	EDSADC_DSDIN2B			**Digital datastream input**
	IOM_PIN_2			**GPIO pad input to FPC**
	EVADC_G10CH5	AI		**Analog input channel 5, group 10**
	EVADC_FC5CH0			**Analog input FC channel 5**
	P33.2	O0		**General-purpose output**
	GTM_TOUT24	O1		**GTM muxed output**
	IOM_MON0_2			**Monitor input 0**
	IOM_GTM_2			**GTM-provided inputs to EXOR combiner**
	ASCLIN3_ASCLK	O2		**Shift clock output**
	QSPI2_SLSO10	O3		**Master slave select output**
	PSI5_TX0	O4		**TXD outputs (send data)**
	IOM_MON1_14			**Monitor input 1**
	IOM_REF1_14			**Reference input 1**
	EVADC_EMUX01	O5		**Control of external analog multiplexer interface 0**
	EVADC_FC3BFLOUT	O6		**Boundary flag output, FC channel 3**
	—	O7		**Reserved**

Downloaded by IFXDMZlpar-zengzhe 12/02/2019 11:04:31

Table 2-56 Port 33 Functions (cont'd)

Ball	Symbol	Ctrl.	Buffer Type	Function
Y11	P33.3	I	SLOW / PU1 / VEVRSB / ES5	**General-purpose input**
	GTM_TIM3_IN3_12			**Mux input channel 3 of TIM module 3**
	GTM_TIM1_IN7_6			**Mux input channel 7 of TIM module 1**
	GTM_TIM0_IN7_6			**Mux input channel 0 of TIM module 0**
	PSI5_RX1C			**RXD inputs (receive data) channel 1**
	SENT_SENT7C			**Receive input channel 7**
	EDSADC_DSCIN1B			**Modulator clock input**
	IOM_PIN_3			**GPIO pad input to FPC**
	EVADC_G10CH4	AI		**Analog input channel 4, group 10**
	EVADC_FC4CH0			**Analog input FC channel 4**
	P33.3	O0		**General-purpose output**
	GTM_TOUT25	O1		**GTM muxed output**
	IOM_MON0_3			**Monitor input 0**
	IOM_GTM_3			**GTM-provided inputs to EXOR combiner**
	ASCLIN5_ASCLK	O2		**Shift clock output**
	QSPI4_SLSO2	O3		**Master slave select output**
	EDSADC_DSCOUT1	O4		**Modulator clock output**
	EVADC_EMUX00	O5		**Control of external analog multiplexer interface 0**
	EVADC_FC5BFLOUT	O6		**Boundary flag output, FC channel 5**
	—	O7		**Reserved**

Downloaded by IFXDMZlpar-zengzhe 12/02/2019 11:04:31

Table 2-56 Port 33 Functions (cont'd)

Ball	Symbol	Ctrl.	Buffer Type	Function
W12	P33.4	I	SLOW / PU1 / VEVRSB / ES5	**General-purpose input**
	GTM_TIM4_IN4_10			**Mux input channel 4 of TIM module 4**
	GTM_TIM1_IN0_10			**Mux input channel 0 of TIM module 1**
	GTM_TIM0_IN0_10			**Mux input channel 0 of TIM module 0**
	EDSADC_ITR0F			**Trigger/Gate input**
	SENT_SENT6C			**Receive input channel 6**
	EDSADC_DSDIN1B			**Digital datastream input**
	CCU61_CTRAPC			**Trap input capture**
	ASCLIN5_ARXB			**Receive input**
	IOM_PIN_4			**GPIO pad input to FPC**
	GTM_DTMT2_0			**CDTM2_DTM0**
	EVADC_G10CH3	AI		**Analog input channel 3, group 10**
	P33.4	O0		**General-purpose output**
	GTM_TOUT26	O1		**GTM muxed output**
	IOM_MON0_4			**Monitor input 0**
	IOM_GTM_4			**GTM-provided inputs to EXOR combiner**
	ASCLIN2_ARTS	O2		**Ready to send output**
	QSPI2_SLSO12	O3		**Master slave select output**
	PSI5_TX1	O4		**TXD outputs (send data)**
	IOM_MON1_15			**Monitor input 1**
	EVADC_EMUX12	O5		**Control of external analog multiplexer interface 1**
	EVADC_FC0BFLOUT	O6		**Boundary flag output, FC channel 0**
	CAN13_TXD	O7		**CAN transmit output node 3**

Downloaded by IFXDMZlpar-zengzhe 12/02/2019 11:04:31

Table 2-56 Port 33 Functions (cont'd)

Ball	Symbol	Ctrl.	Buffer Type	Function
Y12	P33.5	I	SLOW / PU1 / VEVRSB / ES5	**General-purpose input**
	GTM_TIM4_IN5_10			**Mux input channel 5 of TIM module 4**
	GTM_TIM1_IN1_8			**Mux input channel 1 of TIM module 1**
	GTM_TIM0_IN1_8			**Mux input channel 1 of TIM module 0**
	EDSADC_DSCIN0B			**Modulator clock input**
	EDSADC_ITR1F			**Trigger/Gate input**
	GPT120_T4EUDB			**Count direction control input of timer T4**
	PSI5S_RXC			**RX data input**
	ASCLIN2_ACTSB			**Clear to send input**
	CCU61_CCPOS2C			**Hall capture input 2**
	PSI5_RX2C			**RXD inputs (receive data) channel 2**
	SENT_SENT5C			**Receive input channel 5**
	CAN13_RXDB			**CAN receive input node 3**
	IOM_PIN_5			**GPIO pad input to FPC**
	EVADC_G10CH2	AI		**Analog input channel 2, group 10**
	P33.5	O0		**General-purpose output**
	GTM_TOUT27	O1		**GTM muxed output**
	IOM_MON0_5			**Monitor input 0**
	IOM_GTM_5			**GTM-provided inputs to EXOR combiner**
	QSPI0_SLSO7	O2		**Master slave select output**
	QSPI1_SLSO7	O3		**Master slave select output**
	EDSADC_DSCOUT0	O4		**Modulator clock output**
	EVADC_EMUX11	O5		**Control of external analog multiplexer interface 1**
	EVADC_FC2BFLOUT	O6		**Boundary flag output, FC channel 2**
	ASCLIN5_ASLSO	O7		**Slave select signal output**

Downloaded by IFXDMZlpar-zengzhe 12/02/2019 11:04:31

Table 2-56 Port 33 Functions (cont'd)

Ball	Symbol	Ctrl.	Buffer Type	Function
W13	P33.6	I	SLOW / PU1 / VEVRSB / ES5	**General-purpose input**
	GTM_TIM1_IN2_9			**Mux input channel 2 of TIM module 1**
	GTM_TIM0_IN2_9			**Mux input channel 2 of TIM module 0**
	EDSADC_ITR2F			**Trigger/Gate input**
	GPT120_T2EUDB			**Count direction control input of timer T2**
	SENT_SENT4C			**Receive input channel 4**
	CCU61_CCPOS1C			**Hall capture input 1**
	EDSADC_DSDIN0B			**Digital datastream input**
	ASCLIN8_ARXD			**Receive input**
	IOM_PIN_6			**GPIO pad input to FPC**
	GTM_DTMT2_1			**CDTM2_DTM0**
	EVADC_G10CH1	AI		**Analog input channel 1, group 10**
	P33.6	O0		**General-purpose output**
	GTM_TOUT28	O1		**GTM muxed output**
	IOM_MON0_6			**Monitor input 0**
	IOM_GTM_6			**GTM-provided inputs to EXOR combiner**
	ASCLIN2_ASLSO	O2		**Slave select signal output**
	QSPI2_SLSO11	O3		**Master slave select output**
	PSI5_TX2	O4		**TXD outputs (send data)**
	IOM_REF1_15			**Reference input 1**
	EVADC_EMUX10	O5		**Control of external analog multiplexer interface 1**
	EVADC_FC1BFLOUT	O6		**Boundary flag output, FC channel 1**
	PSI5S_TX	O7		**TX data output**

Downloaded by IFXDMZlpar-zengzhe 12/02/2019 11:04:31

Table 2-56 Port 33 Functions (cont'd)

Ball	Symbol	Ctrl.	Buffer Type	Function
Y13	P33.7	I	SLOW / PU1 / VEVRSB / ES5	**General-purpose input**
	GTM_TIM1_IN3_9			**Mux input channel 3 of TIM module 1**
	GTM_TIM0_IN3_9			**Mux input channel 3 of TIM module 0**
	CAN00_RXDE			**CAN receive input node 0**
	GPT120_T2INB			**Trigger/gate input of timer T2**
	CCU61_CCPOS0C			**Hall capture input 0**
	SCU_E_REQ4_0			**ERU Channel 4 inputs 0 to 5 (0 is the LSB and 5 is the MSB)**
	SENT_SENT14C			**Receive input channel 14**
	IOM_PIN_7			**GPIO pad input to FPC**
	EVADC_G10CH0	AI		**Analog input channel 0, group 10**
	P33.7	O0		**General-purpose output**
	GTM_TOUT29	O1		**GTM muxed output**
	IOM_MON0_7			**Monitor input 0**
	IOM_GTM_7			**GTM-provided inputs to EXOR combiner**
	ASCLIN2_ASCLK	O2		**Shift clock output**
	QSPI4_SLSO7	O3		**Master slave select output**
	ASCLIN8_ATX	O4		**Transmit output**
	—	O5		**Reserved**
	EVADC_FC3BFLOUT	O6		**Boundary flag output, FC channel 3**
	—	O7		**Reserved**

Downloaded by IFXDMZlpar-zengzhe 12/02/2019 11:04:31

Table 2-56 Port 33 Functions (cont'd)

Ball	Symbol	Ctrl.	Buffer Type	Function
W14	P33.8	I	FAST / HighZ / VEVRSB	**General-purpose input**
	GTM_TIM1_IN4_7			**Mux input channel 4 of TIM module 1**
	GTM_TIM0_IN4_7			**Mux input channel 4 of TIM module 0**
	ASCLIN2_ARXE			**Receive input**
	SCU_EMGSTOP_PORT_A			**Emergency stop Port Pin A input request**
	IOM_PIN_8			**GPIO pad input to FPC**
	P33.8	O0		**General-purpose output**
	GTM_TOUT30	O1		**GTM muxed output**
	IOM_MON0_8			**Monitor input 0**
	ASCLIN2_ATX	O2		**Transmit output**
	IOM_MON2_14			**Monitor input 2**
	IOM_REF2_14			**Reference input 2**
	QSPI4_SLSO2	O3		**Master slave select output**
	—	O4		**Reserved**
	CAN00_TXD	O5		**CAN transmit output node 0**
	IOM_MON2_5			**Monitor input 2**
	IOM_REF2_5			**Reference input 2**
	—	O6		**Reserved**
	CCU61_COUT62	O7		**T12 PWM channel 62**
	IOM_MON1_13			**Monitor input 1**
	IOM_REF1_8			**Reference input 1**
	SMU_FSP0	O		**FSP[1..0] Output Signals - Generated by SMU_core**

Downloaded by IFXDMZ|par-zengzhe 12/02/2019 11:04:31

Table 2-56 Port 33 Functions (cont'd)

Ball	Symbol	Ctrl.	Buffer Type	Function
Y14	P33.9	I	SLOW / PU1 / VEVRSB / ES5	**General-purpose input**
	GTM_TIM1_IN1_9			**Mux input channel 1 of TIM module 1**
	GTM_TIM0_IN1_9			**Mux input channel 1 of TIM module 0**
	QSPI3_HSICINA			**Highspeed capture channel**
	IOM_PIN_9			**GPIO pad input to FPC**
	P33.9	O0		**General-purpose output**
	GTM_TOUT31	O1		**GTM muxed output**
	IOM_MON0_9			**Monitor input 0**
	ASCLIN2_ATX	O2		**Transmit output**
	IOM_MON2_14			**Monitor input 2**
	IOM_REF2_14			**Reference input 2**
	QSPI4_SLSO1	O3		**Master slave select output**
	ASCLIN2_ASCLK	O4		**Shift clock output**
	CAN01_TXD	O5		**CAN transmit output node 1**
	IOM_MON2_6			**Monitor input 2**
	IOM_REF2_6			**Reference input 2**
	ASCLIN0_ATX	O6		**Transmit output**
	IOM_MON2_12			**Monitor input 2**
	IOM_REF2_12			**Reference input 2**
	CCU61_CC62	O7		**T12 PWM channel 62**
	IOM_MON1_10			**Monitor input 1**
	IOM_REF1_11			**Reference input 1**

Downloaded by IFXDMZlpar-zengzhe 12/02/2019 11:04:31

Table 2-56 Port 33 Functions (cont'd)

Ball	Symbol	Ctrl.	Buffer Type	Function
W15	P33.10	I	FAST / PU1 / VEVRSB / ES5	**General-purpose input**
	GTM_TIM4_IN4_14			**Mux input channel 4 of TIM module 4**
	GTM_TIM1_IN0_9			**Mux input channel 0 of TIM module 1**
	GTM_TIM0_IN0_9			**Mux input channel 0 of TIM module 0**
	QSPI4_SLSIA			**Slave select input**
	QSPI3_HSICINB			**Highspeed capture channel**
	CAN01_RXDD			**CAN receive input node 1**
	ASCLIN0_ARXD			**Receive input**
	IOM_PIN_10			**GPIO pad input to FPC**
	P33.10	O0		**General-purpose output**
	GTM_TOUT32	O1		**GTM muxed output**
	IOM_MON0_10			**Monitor input 0**
	QSPI1_SLSO6	O2		**Master slave select output**
	QSPI4_SLSO0	O3		**Master slave select output**
	ASCLIN1_ASLSO	O4		**Slave select signal output**
	PSI5S_CLK	O5		**PSISCLK is a clock that can be used on a pin to drive the external PHY.**
	—	O6		**Reserved**
	CCU61_COUT61	O7		**T12 PWM channel 61**
	IOM_MON1_12			**Monitor input 1**
	IOM_REF1_9			**Reference input 1**
	SMU_FSP1	O		**FSP[1..0] Output Signals - Generated by SMU_core**
Y15	P33.11	I	FAST / PU1 / VEVRSB / ES5	**General-purpose input**
	GTM_TIM1_IN2_8			**Mux input channel 2 of TIM module 1**
	GTM_TIM0_IN2_8			**Mux input channel 2 of TIM module 0**
	QSPI4_SCLKA			**Slave SPI clock inputs**
	IOM_PIN_11			**GPIO pad input to FPC**
	P33.11	O0		**General-purpose output**
	GTM_TOUT33	O1		**GTM muxed output**
	IOM_MON0_11			**Monitor input 0**
	ASCLIN1_ASCLK	O2		**Shift clock output**
	QSPI4_SCLK	O3		**Master SPI clock output**
	—	O4		**Reserved**
	—	O5		**Reserved**
	EDSADC_CGPWMN	O6		**Negative carrier generator output**
	CCU61_CC61	O7		**T12 PWM channel 61**
	IOM_MON1_9			**Monitor input 1**
	IOM_REF1_12			**Reference input 1**

Downloaded by IFXDMZ\par-zengzhe 12/02/2019 11:04:31

Table 2-56 Port 33 Functions (cont'd)

Ball	Symbol	Ctrl.	Buffer Type	Function
W16	P33.12	I	FAST / PU1 / VEVRSB / ES5	**General-purpose input**
	GTM_TIM3_IN0_6			**Mux input channel 0 of TIM module 3**
	GTM_TIM2_IN0_6			**Mux input channel 0 of TIM module 2**
	QSPI4_MTSRA			**Save SPI data input**
	CAN00_RXDD			**CAN receive input node 0**
	PMS_PINBWKP			**PINB (P33.12) pin input**
	IOM_PIN_12			**GPIO pad input to FPC**
	P33.12	O0		**General-purpose output**
	GTM_TOUT34	O1		**GTM muxed output**
	IOM_MON0_12			**Monitor input 0**
	ASCLIN1_ATX	O2		**Transmit output**
	IOM_MON2_13			**Monitor input 2**
	IOM_REF2_13			**Reference input 2**
	QSPI4_MTSR	O3		**Master SPI data output**
	ASCLIN1_ASCLK	O4		**Shift clock output**
	CAN22_TXD	O5		**CAN transmit output node 2**
	EDSADC_CGPWMP	O6		**Positive carrier generator output**
	CCU61_COUT60	O7		**T12 PWM channel 60**
	IOM_MON1_11			**Monitor input 1**
	IOM_REF1_10			**Reference input 1**

Downloaded by IFXDMZ|par-zengzhe 12/02/2019 11:04:31

Table 2-56 Port 33 Functions (cont'd)

Ball	Symbol	Ctrl.	Buffer Type	Function
Y16	P33.13	I	FAST / PU1 / VEVRSB / ES5	**General-purpose input**
	GTM_TIM3_IN1_5			**Mux input channel 1 of TIM module 3**
	GTM_TIM2_IN1_5			**Mux input channel 1 of TIM module 2**
	ASCLIN1_ARXF			**Receive input**
	EDSADC_SGNB			**Carrier sign signal input**
	QSPI4_MRSTA			**Master SPI data input**
	MSC1_INJ1			**Injection signal from port**
	CAN22_RXDA			**CAN receive input node 2**
	P33.13	O0		**General-purpose output**
	GTM_TOUT35	O1		**GTM muxed output**
	ASCLIN1_ATX	O2		**Transmit output**
	IOM_MON2_13			**Monitor input 2**
	IOM_REF2_13			**Reference input 2**
	QSPI4_MRST	O3		**Slave SPI data output**
	IOM_MON2_4			**Monitor input 2**
	IOM_REF2_4			**Reference input 2**
	QSPI2_SLSO6	O4		**Master slave select output**
	CAN00_TXD	O5		**CAN transmit output node 0**
	IOM_MON2_5			**Monitor input 2**
	IOM_REF2_5			**Reference input 2**
	—	O6		**Reserved**
	CCU61_CC60	O7		**T12 PWM channel 60**
	IOM_MON1_8			**Monitor input 1**
	IOM_REF1_13			**Reference input 1**

Downloaded by IFXDMZ|par-zengzhe 12/02/2019 11:04:31

Table 2-56 Port 33 Functions (cont'd)

Ball	Symbol	Ctrl.	Buffer Type	Function
T14	P33.14	I	FAST / PU1 / VEVRSB / ES5	**General-purpose input**
	GTM_TIM5_IN0_8			**Mux input channel 0 of TIM module 5**
	GTM_TIM4_IN5_14			**Mux input channel 5 of TIM module 4**
	GTM_TIM2_IN0_8			**Mux input channel 0 of TIM module 2**
	QSPI2_SCLKD			**Slave SPI clock inputs**
	CBS_TGI6			**Trigger input**
	P33.14	O0		**General-purpose output**
	GTM_TOUT143	O1		**GTM muxed output**
	—	O2		**Reserved**
	QSPI2_SCLK	O3		**Master SPI clock output**
	—	O4		**Reserved**
	—	O5		**Reserved**
	—	O6		**Reserved**
	CCU60_CC62	O7		**T12 PWM channel 62**
	IOM_MON1_0			**Monitor input 1**
	IOM_REF1_4			**Reference input 1**
	CBS_TGO6	O		**Trigger output**
U14	P33.15	I	SLOW / PU1 / VEVRSB / ES5	**General-purpose input**
	GTM_TIM5_IN1_9			**Mux input channel 1 of TIM module 5**
	GTM_TIM4_IN6_12			**Mux input channel 6 of TIM module 4**
	GTM_TIM2_IN1_7			**Mux input channel 1 of TIM module 2**
	CBS_TGI7			**Trigger input**
	P33.15	O0		**General-purpose output**
	GTM_TOUT144	O1		**GTM muxed output**
	—	O2		**Reserved**
	QSPI2_SLSO11	O3		**Master slave select output**
	—	O4		**Reserved**
	—	O5		**Reserved**
	—	O6		**Reserved**
	CCU60_COUT62	O7		**T12 PWM channel 62**
	IOM_MON1_5			**Monitor input 1**
	IOM_REF1_1			**Reference input 1**
	CBS_TGO7	O		**Trigger output**

Downloaded by IFXDMZlpar-zengzhe 12/02/2019 11:04:31

Table 2-57 Port 34 Functions

Ball	Symbol	Ctrl.	Buffer Type	Function
U11	P34.1	I	SLOW / PU1 / VEVRSB / ES5	**General-purpose input**
	GTM_TIM5_IN3_9			**Mux input channel 3 of TIM module 5**
	GTM_TIM3_IN4_12			**Mux input channel 4 of TIM module 3**
	GTM_TIM2_IN3_9			**Mux input channel 3 of TIM module 2**
	EVADC_G10CH11	AI		**Analog input channel 11, group 10**
	P34.1	O0		**General-purpose output**
	GTM_TOUT146	O1		**GTM muxed output**
	ASCLIN4_ATX	O2		**Transmit output**
	—	O3		**Reserved**
	CAN00_TXD	O4		**CAN transmit output node 0**
	IOM_MON2_5			**Monitor input 2**
	IOM_REF2_5			**Reference input 2**
	CAN20_TXD	O5		**CAN transmit output node 0**
	—	O6		**Reserved**
	CCU60_COUT63	O7		**T13 PWM channel 63**
	IOM_MON1_6			**Monitor input 1**
	IOM_REF1_0			**Reference input 1**
T12	P34.2	I	SLOW / PU1 / VEVRSB / ES	**General-purpose input**
	GTM_TIM5_IN4_9			**Mux input channel 4 of TIM module 5**
	GTM_TIM3_IN5_13			**Mux input channel 5 of TIM module 3**
	GTM_TIM2_IN4_8			**Mux input channel 4 of TIM module 2**
	ASCLIN4_ARXB			**Receive input**
	CAN00_RXDG			**CAN receive input node 0**
	CAN20_RXDC			**CAN receive input node 0**
	EVADC_G10CH10	AI		**Analog input channel 10, group 10**
	P34.2	O0		**General-purpose output**
	GTM_TOUT147	O1		**GTM muxed output**
	—	O2		**Reserved**
	—	O3		**Reserved**
	—	O4		**Reserved**
	—	O5		**Reserved**
	—	O6		**Reserved**
	CCU60_CC60	O7		**T12 PWM channel 60**
	IOM_MON1_2			**Monitor input 1**
	IOM_REF1_6			**Reference input 1**

Downloaded by IFXDMZ|par-zengzhe 12/02/2019 11:04:31

Table 2-57 Port 34 Functions (cont'd)

Ball	Symbol	Ctrl.	Buffer Type	Function
U12	P34.3	I	SLOW / PU1 / VEVRSB / ES	**General-purpose input**
	GTM_TIM5_IN5_10			**Mux input channel 5 of TIM module 5**
	GTM_TIM3_IN6_13			**Mux input channel 6 of TIM module 3**
	GTM_TIM2_IN5_9			**Mux input channel 5 of TIM module 2**
	EVADC_G10CH9	AI		**Analog input channel 9, group 10**
	P34.3	O0		**General-purpose output**
	GTM_TOUT148	O1		**GTM muxed output**
	ASCLIN4_ASCLK	O2		**Shift clock output**
	—	O3		**Reserved**
	QSPI2_SLSO10	O4		**Master slave select output**
	—	O5		**Reserved**
	—	O6		**Reserved**
	CCU60_COUT60	O7		**T12 PWM channel 60**
	IOM_MON1_3			**Monitor input 1**
	IOM_REF1_3			**Reference input 1**
T13	P34.4	I	SLOW / PU1 / VEVRSB / ES	**General-purpose input**
	GTM_TIM5_IN6_10			**Mux input channel 6 of TIM module 5**
	GTM_TIM3_IN7_12			**Mux input channel 7 of TIM module 3**
	GTM_TIM2_IN6_8			**Mux input channel 6 of TIM module 2**
	QSPI2_MRSTD			**Master SPI data input**
	EVADC_G10CH8	AI		**Analog input channel 8, group 10**
	P34.4	O0		**General-purpose output**
	GTM_TOUT149	O1		**GTM muxed output**
	ASCLIN4_ASLSO	O2		**Slave select signal output**
	—	O3		**Reserved**
	QSPI2_MRST	O4		**Slave SPI data output**
	IOM_MON2_2			**Monitor input 2**
	IOM_REF2_2			**Reference input 2**
	—	O5		**Reserved**
	EVADC_FC6BFLOUT	O6		**Boundary flag output, FC channel 6**
	CCU60_CC61	O7		**T12 PWM channel 61**
	IOM_MON1_1			**Monitor input 1**
	IOM_REF1_5			**Reference input 1**

Downloaded by IFXDMZlpar-zengzhe 12/02/2019 11:04:31

Table 2-57 Port 34 Functions (cont'd)

Ball	Symbol	Ctrl.	Buffer Type	Function
U13	P34.5	I	FAST / PU1 / VEVRSB / ES	**General-purpose input**
	GTM_TIM5_IN7_9			**Mux input channel 7 of TIM module 5**
	GTM_TIM4_IN7_12			**Mux input channel 7 of TIM module 4**
	GTM_TIM2_IN7_9			**Mux input channel 7 of TIM module 2**
	QSPI2_MTSRD			**Save SPI data input**
	ASCLIN8_ARXE			**Receive input**
	P34.5	O0		**General-purpose output**
	GTM_TOUT150	O1		**GTM muxed output**
	ASCLIN8_ATX	O2		**Transmit output**
	—	O3		**Reserved**
	QSPI2_MTSR	O4		**Master SPI data output**
	—	O5		**Reserved**
	EVADC_FC7BFLOUT	O6		**Boundary flag output, FC channel 7**
	CCU60_COUT61	O7		**T12 PWM channel 61**
	IOM_MON1_4			**Monitor input 1**
	IOM_REF1_2			**Reference input 1**

Table 2-58 Port 50 Functions

Ball	Symbol	Ctrl.	Buffer Type	Function
C2	P50.0	I	LVDS_RX / HighZ / VEXT / ES	—
	RIF0_D1N			**Radar data negative in 1**
C1	P50.1	I	LVDS_RX / HighZ / VEXT / ES	—
	RIF0_D1P			**Radar data positive in 1**
D2	P50.2	I	LVDS_RX / HighZ / VEXT / ES	—
	RIF0_D2N			**Radar data negative in 2**
D1	P50.3	I	LVDS_RX / HighZ / VEXT / ES	—
	RIF0_D2P			**Radar data positive in 2**
E2	P50.4	I	LVDS_RX / HighZ / VEXT / ES	—
	RIF0_CLKN			**Radar clock negative in**

Downloaded by IFXDMZ|par-zengzhe 12/02/2019 11:04:31

Table 2-58 Port 50 Functions (cont'd)

Ball	Symbol	Ctrl.	Buffer Type	Function
E1	P50.5	I	LVDS_RX / HighZ / VEXT / ES	—
	RIF0_CLKP			**Radar clock positive in**
F2	P50.6	I	LVDS_RX / HighZ / VEXT / ES	—
	RIF0_FRP			**Frame clock positive in**
F1	P50.7	I	LVDS_RX / HighZ / VEXT / ES	—
	RIF0_FRN			**Frame clock negative in**
G2	P50.8	I	LVDS_RX / HighZ / VEXT / ES	—
	RIF0_D3P			**Radar data positive in 3**
G1	P50.9	I	LVDS_RX / HighZ / VEXT / ES	—
	RIF0_D3N			**Radar data negative in 3**
H2	P50.10	I	LVDS_RX / HighZ / VEXT / ES	—
	RIF0_D4P			**Radar data positive in 4**
H1	P50.11	I	LVDS_RX / HighZ / VEXT / ES	—
	RIF0_D4N			**Radar data negative in 4**

Table 2-59 Port 51 Functions

Ball	Symbol	Ctrl.	Buffer Type	Function
B9	P51.0	I	LVDS_RX / HighZ / VEXT / ES	—
	RIF1_D1N			**Radar data negative in 1**
A9	P51.1	I	LVDS_RX / HighZ / VEXT / ES	—
	RIF1_D1P			**Radar data positive in 1**
B8	P51.2	I	LVDS_RX / HighZ / VEXT / ES	—
	RIF1_D2N			**Radar data negative in 2**

Downloaded by IFXDMZ|par-zengzhe 12/02/2019 11:04:31

Table 2-59 Port 51 Functions (cont'd)

Ball	Symbol	Ctrl.	Buffer Type	Function
A8	P51.3	I	LVDS_RX / HighZ / VEXT / ES	—
	RIF1_D2P			**Radar data positive in 2**
B7	P51.4	I	LVDS_RX / HighZ / VEXT / ES	—
	RIF1_CLKN			**Radar clock negative in**
A7	P51.5	I	LVDS_RX / HighZ / VEXT / ES	—
	RIF1_CLKP			**Radar clock positive in**
B6	P51.6	I	LVDS_RX / HighZ / VEXT / ES	—
	RIF1_FRP			**Frame clock positive in**
A6	P51.7	I	LVDS_RX / HighZ / VEXT / ES	—
	RIF1_FRN			**Frame clock negative in**
B5	P51.8	I	LVDS_RX / HighZ / VEXT / ES	—
	RIF1_D3P			**Radar data positive in 3**
A5	P51.9	I	LVDS_RX / HighZ / VEXT / ES	—
	RIF1_D3N			**Radar data negative in 3**
B4	P51.10	I	LVDS_RX / HighZ / VEXT / ES	—
	RIF1_D4P			**Radar data positive in 4**
A4	P51.11	I	LVDS_RX / HighZ / VEXT / ES	—
	RIF1_D4N			**Radar data negative in 4**

Table 2-60 Analog Inputs

Ball	Symbol	Ctrl.	Buffer Type	Function
T10	AN0	I	D / HighZ / VDDM	**Analog Input 0**
	EVADC_G0CH0			**Analog input channel 0, group 0**
	EDSADC_EDS3PA			**Positive analog input channel 3, pin A**

Downloaded by IFXDMZ|par-zengzhe 12/02/2019 11:04:31

Table 2-60 Analog Inputs (cont'd)

Ball	Symbol	Ctrl.	Buffer Type	Function
U10	AN1	I	D / HighZ / VDDM	**Analog Input 1**
	EVADC_G0CH1			**Analog input channel 1, group 0**
	EDSADC_EDS3NA			**Negative analog input channel 3, pin A**
W9	AN2	I	D / HighZ / VDDM	**Analog Input 2**
	EVADC_G0CH2			**Analog input channel 2, group 0**
	EDSADC_EDS0PA			**Positive analog input channel 0, pin A**
U9	AN3	I	D / HighZ / VDDM	**Analog Input 3**
	EVADC_G0CH3			**Analog input channel 3, group 0**
	EDSADC_EDS0NA			**Negative analog input channel 0, pin A**
T9	AN4	I	D / HighZ / VDDM	**Analog Input 4**
	EVADC_G11CH0			**Analog input channel 0, group 11**
	EVADC_G0CH4			**Analog input channel 4, group 0**
Y9	AN5	I	D / HighZ / VDDM	**Analog Input 5**
	EVADC_G11CH1			**Analog input channel 1, group 11**
	EVADC_G0CH5			**Analog input channel 5, group 0**
T8	AN6	I	D / HighZ / VDDM	**Analog Input 6**
	EVADC_G11CH2			**Analog input channel 2, group 11**
	EVADC_G0CH6			**Analog input channel 6, group 0**
U8	AN7	I	D / HighZ / VDDM	**Analog Input 7**
	EVADC_G11CH3			**Analog input channel 3, group 11**
	EVADC_G0CH7			**Analog input channel 7, group 0**
W8	AN8	I	D / HighZ / VDDM	**Analog Input 8**
	EVADC_G11CH4			**Analog input channel 4, group 11**
	EVADC_G1CH0			**Analog input channel 0, group 1**
U7	AN9	I	D / HighZ / VDDM	**Analog Input 9**
	EVADC_G11CH5			**Analog input channel 5, group 11**
	EVADC_G1CH1			**Analog input channel 1, group 1**
Y8	AN10	I	D / HighZ / VDDM	**Analog Input 10**
	EVADC_G11CH6			**Analog input channel 6, group 11**
	EVADC_G1CH2			**Analog input channel 2, group 1**
W7	AN11	I	D / HighZ / VDDM	**Analog Input 11**
	EVADC_G11CH7			**Analog input channel 7, group 11**
	EVADC_G1CH3			**Analog input channel 3, group 1**
T7	AN12	I	D / HighZ / VDDM	**Analog Input 12**
	EVADC_G1CH4			**Analog input channel 4, group 1**
	EDSADC_EDS0PB			**Positive analog input channel 0, pin B**

Downloaded by IFXDMZ|par-zengzhe 12/02/2019 11:04:31

Table 2-60 Analog Inputs (cont'd)

Ball	Symbol	Ctrl.	Buffer Type	Function
W6	AN13	I	D / HighZ / VDDM	**Analog Input 13**
	EVADC_G1CH5			**Analog input channel 5, group 1**
	EDSADC_EDS0NB			**Negative analog input channel 0, pin B**
U6	AN14	I	D / HighZ / VDDM	**Analog Input 14**
	EVADC_G1CH6			**Analog input channel 6, group 1**
	EDSADC_EDS3PB			**Positive analog input channel 3, pin B**
T6	AN15	I	D / HighZ / VDDM	**Analog Input 15**
	EVADC_G1CH7			**Analog input channel 7, group 1**
	EDSADC_EDS3NB			**Negative analog input channel 3, pin N**
W5	AN16	I	D / HighZ / VDDM	**Analog Input 16**
	EVADC_G2CH0			**Analog input channel 0, group 2**
	EVADC_FC0CH0			**Analog input FC channel 0**
U5	AN17/P40.10	I	S / HighZ / VDDM	**Analog Input 17**
	SENT_SENT10A			**Receive input channel 10**
	EVADC_G2CH1			**Analog input channel 1, group 2**
	EVADC_FC1CH0			**Analog input FC channel 1**
W4	AN18/P40.11	I	S / HighZ / VDDM	**Analog Input 18**
	SENT_SENT11A			**Receive input channel 11**
	EVADC_G11CH8			**Analog input channel 8, group 11**
	EVADC_G2CH2			**Analog input channel 2, group 2**
W3	AN19/P40.12	I	S / HighZ / VDDM	**Analog Input 19**
	SENT_SENT12A			**Receive input channel 12**
	EVADC_G11CH9			**Analog input channel 9, group 11**
	EVADC_G2CH3			**Analog input channel 3, group 2**
Y3	AN20	I	D / HighZ / VDDM	**Analog Input 20**
	EVADC_G2CH4			**Analog input channel 4, group 2**
	EDSADC_EDS2PA			**Positive analog input channel 2, pin A**
Y2	AN21	I	D / HighZ / VDDM	**Analog Input 21**
	EVADC_G2CH5			**Analog input channel 5, group 2**
	EDSADC_EDS2NA			**Negative analog input channel 2, pin A**
T5	AN22	I	D / HighZ / VDDM	**Analog Input 22**
	EVADC_G2CH6			**Analog input channel 6, group 2**
R5	AN23	I	D / HighZ / VDDM	**Analog Input 23**
	EVADC_G2CH7			**Analog input channel 7, group 2**

Downloaded by IFXDMZ|par-zengzhe 12/02/2019 11:04:31

Table 2-60 Analog Inputs (cont'd)

Ball	Symbol	Ctrl.	Buffer Type	Function
T4	AN24/P40.0	I	S / HighZ / VDDM	**Analog Input 24**
	SENT_SENT0A			**Receive input channel 0**
	EVADC_G3CH0			**Analog input channel 0, group 3**
	CCU60_CCPOS0D			**Hall capture input 0**
	EDSADC_EDS2PB			**Positive analog input channel 2, pin B**
R4	AN25/P40.1	I	S / HighZ / VDDM	**Analog Input 25**
	SENT_SENT1A			**Receive input channel 1**
	EVADC_G3CH1			**Analog input channel 1, group 3**
	CCU60_CCPOS1B			**Hall capture input 1**
	EDSADC_EDS2NB			**Negative analog input channel 2, pin B**
W1	AN36/P40.6	I	S / HighZ / VDDM	**Analog Input 36**
	SENT_SENT6A			**Receive input channel 6**
	EVADC_G8CH4			**Analog input channel 4, group 8**
	CCU61_CCPOS1B			**Hall capture input 1**
	EDSADC_EDS1PA			**Positive analog input channel 1, pin A**
V2	AN37/P40.7	I	S / HighZ / VDDM	**Analog Input 37**
	SENT_SENT7A			**Receive input channel 7**
	EVADC_G8CH5			**Analog input channel 5, group 8**
	CCU61_CCPOS1D			**Hall capture input 1**
	EDSADC_EDS1NA			**Negative analog input channel 1, pin A**
W2	AN38/P40.8	I	S / HighZ / VDDM	**Analog Input 38**
	SENT_SENT8A			**Receive input channel 8**
	EVADC_G8CH6			**Analog input channel 6, group 8**
	CCU61_CCPOS2B			**Hall capture input 2**
	EDSADC_EDS1PB			**Positive analog input channel 1, pin B**
V1	AN39/P40.9	I	S / HighZ / VDDM	**Analog Input 39**
	SENT_SENT9A			**Receive input channel 9**
	EVADC_G8CH7			**Analog input channel 7, group 8**
	CCU61_CCPOS2D			**Hall capture input 2**
	EDSADC_EDS1NB			**Negative analog input channel 1, pin B**
U1	AN44	I	D / HighZ / VDDM	**Analog Input 44**
	EVADC_G8CH12			**Analog input channel 12, group 8**
	EDSADC_EDS1PC			**Positive analog input channel 1, pin C**
P5	AN45	I	D / HighZ / VDDM	**Analog Input 45**
	EVADC_G8CH13			**Analog input channel 13, group 8**
	EDSADC_EDS1NC			**Negative analog input channel 1, pin C**

Downloaded by IFXDMZ|par-zengzhe 12/02/2019 11:04:31

Table 2-60 Analog Inputs (cont'd)

Ball	Symbol	Ctrl.	Buffer Type	Function
U2	AN46	I	D / HighZ / VDDM	**Analog Input 46**
	EVADC_G8CH14			**Analog input channel 14, group 8**
	EDSADC_EDS1PD			**Positive analog input channel 1, pin D**
P4	AN47	I	D / HighZ / VDDM	**Analog Input 47**
	EVADC_G8CH15			**Analog input channel 15, group 8**
	EDSADC_EDS1ND			**Negative analog input channel 1, pin D**

Table 2-61 System I/O

Ball	Symbol	Ctrl.	Buffer Type	Function
L7	AGBTCLKN (VSS)	I	LVDS_RX / VEXT	**AGBT Input;(TC3xx devices without AGBT: VSS)**
K7	AGBTCLKP (VSS)	I	LVDS_RX / VEXT	**AGBT Input;(TC3xx devices without AGBT: VSS)**
P10	AGBTTXN (VSS)	O	LVDS_TX / VEXT	**AGBT Output;(TC3xx devices without AGBT: VSS)**
P11	AGBTTXP (VSS)	O	LVDS_TX / VEXT	**AGBT Output;(TC3xx devices without AGBT: VSS)**
L14	AGBTERR (VSS)	I	FAST / PD / VEXT	**AGBT Input;(TC3xx devices without AGBT: VSS)**
W17	P32.1/VGATE1P	O	—	**DCDC P ch. MOSFET gate driver output** P32.1 / External Pass Device gate control for EVRC
Y17	P32.0/VGATE1N	O	—	**DCDC N ch. MOSFET gate driver output** P32.0 / SMPS mode: analog output. External Pass Device gate control for EVRC
M20	XTAL1	I	XTAL / VEXTOSC	**XTAL1. Main Oscillator/PLL/Clock Generator Input.**
M19	XTAL2	O	XTAL / VEXTOSC	**XTAL2. Main Oscillator/PLL/Clock Generator OUTPUT**
K14	DAPE0	I	FAST / PD2 / VEXT	**DAPE: DAPE0 Clock Input** DAPE: DAPE0 clock input(PD Devices: NC)
L19	$\overline{\text{TRST}}$	I	FAST / PU2 / VEXT	**JTAG Module Reset/Enable Input**
	DAPE0	I		**DAPE: DAPE0 Clock Input**
K16	TMS	I	FAST / PD2 / VEXT	**JTAG Module State Machine Control Input**
	DAP1	I/O		**DAP: DAP1 Data I/O**

Downloaded by IFXDMZlpar-zengzhe 12/02/2019 11:04:31

Table 2-61 System I/O (cont'd)

Ball	Symbol	Ctrl.	Buffer Type	Function
J16	TCK	I	FAST / PD2 / VEXT	**JTAG Module Clock Input**
	DAP0	I		**DAP: DAP0 Clock Input**
G11	DAPE1	I/O	FAST / PD2 / VEXT	**DAPE: DAPE1 Data I/O** DAPE: DAPE1 Data I/O(PD Devices: VSS)
G10	DAPE2	I/O	FAST / PD2 / VEXT	**DAPE: DAPE2 Data I/O** DAPE: DAPE2 Data I/O(PD Devices: VSS)
G16	$\overline{\text{ESR1}}$	I	FAST / PU1 / VEXT	**ESR1 Port Pin input - can be used to trigger a reset or an NMI** ESR1: External System Request Reset 1. Default NMI function. See also SCU chapter for details. Default after power-on can be different. See also SCU chapter ´Reset Control Unit´ and SCU_IOCR register description. PMS_EVRWUP: EVR Wakepup Pin
	PMS_ESR1WKP	I		**ESR1 pin input**
F16	$\overline{\text{ESR0}}$	I	FAST / OD / VEXT	**ESR0 Port Pin input - can be used to trigger a reset or an NMI** ESR0: External System Request Reset 0. Default configuration during and after reset is open-drain driver. The driver drives low during power-on reset. This is valid additionally after deactivation of PORST_N until the internal reset phase has finished. See also SCU chapter for details. Default after power-on can be different. See also SCU chapter ´Reset Control Unit´ and SCU_IOCR register description. PMS_EVRWUP: EVR Wakepup Pin
	PMS_ESR0WKP	I		**ESR0 pin input**
G17	$\overline{\text{PORST}}$	I	PORST / PD / VEXT	**PORST pin input** Power On Reset Input. Additional strong PD in case of power fail.

Table 2-62 Supply

Ball	Symbol	Ctrl.	Buffer Type	Function
P8, P13, N7, N14, E15, H14, D16, G13, G8, H7	VDD	I	—	**Digital Core Power Supply (1.25V)**
A2, B3, V19, W20	VEXT	I	—	**External Power Supply (5V / 3.3V)**
D5	VFLEX	I	—	**Digital Power Supply for Flex Port Pads (5V / 3.3V)**
Y5	VDDM	I	—	**ADC Analog Power Supply (5V / 3.3V)**

Downloaded by IFXDMZ|par-zengzhe 12/02/2019 11:04:31

Table 2-62 Supply (cont'd)

Ball	Symbol	Ctrl.	Buffer Type	Function
B18, A19	VDDP3	I	—	**Flash Power Supply (3.3V)**
B2, D4, E5, T16, U17, W19, Y20, E16, D17, B19, A20	VSS	I	—	**Digital Ground**
Y4	VSSM	I	—	**Analog Ground for VDDM**
P9, P12, N9, N10, N11, N12, M7, M8, M10, M11, M13, M14, L8, L9, L10, L11, L12, L13, K8, K9, K10, K11, K12, K13, J7, J8, J10, J11, J13, J14, H9, H10, H11, H12, G9, G12	VSS	I	—	**Digital Ground**
L20	VSSOSC	I	—	**Oscillator Ground**
Y6	VAREF1	I	—	**Positive Analog Reference Voltage 1**
Y7	VAGND1	I	—	**Negative Analog Reference Voltage 1**
T1	VAREF2	I	—	**Positive Analog Reference Voltage 2**
T2	VAGND2	I	—	**Negative Analog Reference Voltage 2**
A3, B1	NC	I	—	**Not connected. These pins are reserved for future extensions and shall not be connected externally**
A1, Y1, U4	NC1	I	—	**Not connected. These pins are not connected on package level and will not be used for future extensions**
T11	VEVRSB	I	—	**Standby Power Supply (5V / 3.3V) for the Standby SRAM**
N19	VDDOSC	I	—	**Digital Power Supply for Oscillator (1.25V)**
N20	VEXTOSC	I	—	**Digital Power Supply for Oscillator (shall be supplied with same level as used for VEXT)**

2.4 Pin Position Definition

Downloaded by IFXDMZ|par-zengzhe 12/02/2019 11:04:31

Table 2-63 Pad List

Number	Pad Name	Pad Type	X	Y	Comment
1	VEXT	Vx	255699	175644	Supply Voltage
2	VSS	Vx	356499	175644	Supply Voltage
3	P14.0	FAST / PU1 / VEXT / ES2	457299	175644	General-purpose I/O
4	P15.7	FAST / PU1 / VEXT / ES	558099	175644	General-purpose I/O
5	VDDP3	Vx	635499	322614	Supply Voltage
6	VDD	Vx	714699	175644	Supply Voltage
7	P15.10	LVDS_TX / FAST / PU1 / VEXT / ES6	826200	322614	General-purpose I/O
8	P15.11	LVDS_TX / FAST / PU1 / VEXT / ES6	920196	322614	General-purpose I/O
9	VSS	Vx	1031697	175644	Supply Voltage
10	P15.12	LVDS_TX / FAST / PU1 / VEXT / ES6	1143198	322614	General-purpose I/O
11	P15.13	LVDS_TX / FAST / PU1 / VEXT / ES6	1237194	322614	General-purpose I/O
12	P14.4	SLOW / PU2 / VEXT / ES	1348695	175644	General-purpose I/O
13	P15.15	FAST / PU1 / VEXT / ES	1395693	322614	General-purpose I/O
14	VDD	Vx	1463499	175644	Supply Voltage
15	P15.14	FAST / PU1 / VEXT / ES	1517499	322614	General-purpose I/O
16	P14.3	SLOW / PU2 / VEXT / ES	1564497	175644	General-purpose I/O
17	P14.11	SLOW / PU1 / VEXT / ES	1611495	322614	General-purpose I/O
18	VSS	Vx	1665999	175644	Supply Voltage
19	P14.1	FAST / PU1 / VEXT / ES2	1724499	322614	General-purpose I/O
20	P15.8	FAST / PU1 / VEXT / ES	1771497	175644	General-purpose I/O
21	P14.13	FAST / PU1 / VEXT / ES	1818495	322614	General-purpose I/O
22	VSS	Vx	1865493	175644	Supply Voltage
23	P14.12	SLOW / PU1 / VEXT / ES	1912491	322614	General-purpose I/O

Downloaded by IFXDMZ|par-zengzhe 12/02/2019 11:04:31

Table 2-63 Pad List (cont'd)

Number	Pad Name	Pad Type	X	Y	Comment
24	VEXT	Vx	1959489	175644	Supply Voltage
25	P14.5	FAST / PU2 / VEXT / ES	2006487	322614	General-purpose I/O
26	VDD	Vx	2069505	175644	Supply Voltage
27	P14.15	SLOW / PU1 / VEXT / ES	2125503	322614	General-purpose I/O
28	P14.6	FAST / PU1 / VEXT / ES	2172501	175644	General-purpose I/O
29	P14.14	FAST / PU1 / VEXT / ES	2219499	322614	General-purpose I/O
30	P14.7	SLOW / PU1 / VEXT / ES	2266497	175644	General-purpose I/O
31	P14.8	SLOW / PU1 / VEXT / ES	2313495	322614	General-purpose I/O
32	VSS	Vx	2375001	175644	Supply Voltage
33	P13.0	LVDS_TX / FAST / PU1 / VEXT / ES6	2486502	322614	General-purpose I/O
34	P13.1	LVDS_TX / FAST / PU1 / VEXT / ES6	2580498	322614	General-purpose I/O
35	VDD	Vx	2691999	175644	Supply Voltage
36	VDD	Vx	2781999	175644	Supply Voltage
37	P13.2	LVDS_TX / FAST / PU1 / VEXT / ES6	2893500	322614	General-purpose I/O
38	P13.3	LVDS_TX / FAST / PU1 / VEXT / ES6	2987496	322614	General-purpose I/O
39	VSS	Vx	3098997	175644	Supply Voltage
40	VSS	Vx	3188997	175644	Supply Voltage
41	P13.4	LVDS_TX / FAST / PU1 / VEXT / ES6	3300498	322614	General-purpose I/O
42	P13.5	LVDS_TX / FAST / PU1 / VEXT / ES6	3394494	322614	General-purpose I/O
43	P14.2	SLOW / PU2 / VEXT / ES	3505995	175644	General-purpose I/O
44	P13.6	LVDS_TX / FAST / PU1 / VEXT / ES6	3617496	322614	General-purpose I/O

Downloaded by IFXDMZ|par-zengzhe 12/02/2019 11:04:31

Table 2-63 Pad List (cont'd)

Number	Pad Name	Pad Type	X	Y	Comment
45	P13.7	LVDS_TX / FAST / PU1 / VEXT / ES6	3711492	322614	General-purpose I/O
46	VDD	Vx	3822993	322614	Supply Voltage
47	VSS	Vx	3869991	175644	Supply Voltage
48	VSS	Vx	3974499	175644	Supply Voltage
49	VDD	Vx	4064499	322614	Supply Voltage
50	VEXT	Vx	4152501	175644	Supply Voltage
51	VDDP3	Vx	4334499	175644	Analog Input VDDP3
52	VDDP3	Vx	4388499	322614	Analog Input VDDP3
53	VDDP3	Vx	4469499	175644	Supply Voltage
54	VSS	Vx	4556979	175644	Supply Voltage
55	P13.10	SLOW / PU1 / VEXT / ES	4603977	322614	General-purpose I/O
56	P13.9	FAST / PU1 / VEXT / ES	4650975	175644	General-purpose I/O
57	P13.11	SLOW / PU1 / VEXT / ES	4697973	322614	General-purpose I/O
58	P14.9	LVDS_RX / FAST / PU1 / VEXT / ES	4773024	175644	General-purpose I/O
59	P14.10	LVDS_RX / FAST / PU1 / VEXT / ES	4867020	175644	General-purpose I/O
60	P13.12	SLOW / PU1 / VEXT / ES	4942071	322614	General-purpose I/O
61	VDD	Vx	5031567	175644	Supply Voltage
62	P13.13	SLOW / PU1 / VEXT / ES	5125563	322614	General-purpose I/O
63	VSS	Vx	5219559	175644	Supply Voltage
64	P13.14	SLOW / PU1 / VEXT / ES	5309055	322614	General-purpose I/O
65	VSS	Vx	5356053	175644	Supply Voltage
66	P13.15	SLOW / PU1 / VEXT / ES	5403051	322614	General-purpose I/O
67	VEXT	Vx	5450049	175644	Supply Voltage
68	P12.0	SLOW / PU1 / VFLEX / ES	5547231	322614	General-purpose I/O
69	P12.1	SLOW / PU1 / VFLEX / ES	5594229	175644	General-purpose I/O
70	P11.0	RFAST / PU1 / VFLEX / ES	5703633	322614	General-purpose I/O

Downloaded by IFXDMZ|par-zengzhe 12/02/2019 11:04:31

Table 2-63 Pad List (cont'd)

Number	Pad Name	Pad Type	X	Y	Comment
71	VFLEX	Vx	5750631	175644	Supply Voltage
72	P11.1	RFAST / PU1 / VFLEX / ES	5825835	322614	General-purpose I/O
73	VSS	Vx	5872833	175644	Supply Voltage
74	P11.2	RFAST / PU1 / VFLEX / ES	5948037	322614	General-purpose I/O
75	VDD	Vx	5995035	175644	Supply Voltage
76	P11.4	RFAST / PU1 / VFLEX / ES	6110739	322614	General-purpose I/O
77	VSS	Vx	6198237	175644	Supply Voltage
78	P11.3	RFAST / PU1 / VFLEX / ES	6273441	322614	General-purpose I/O
79	VFLEX	Vx	6320439	175644	Supply Voltage
80	P11.6	RFAST / PU1 / VFLEX / ES	6395643	322614	General-purpose I/O
81	VSS	Vx	6442641	175644	Supply Voltage
82	P11.5	SLOW / PU1 / VFLEX / ES	6489639	322614	General-purpose I/O
83	VDD	Vx	6602499	175644	Supply Voltage
84	VSS	Vx	6687999	175644	Supply Voltage
85	P11.7	SLOW / PU1 / VFLEX / ES	6791499	175644	General-purpose I/O
86	P11.9	FAST / PU1 / VFLEX / ES	6842097	322614	General-purpose I/O
87	VFLEX	Vx	6892695	175644	Supply Voltage
88	P11.8	SLOW / PU1 / VFLEX / ES	6939693	322614	General-purpose I/O
89	P11.10	FAST / PU1 / VFLEX / ES	6990291	175644	General-purpose I/O
90	P11.11	FAST / PU1 / VFLEX / ES	7040889	322614	General-purpose I/O
91	VSS	Vx	7091487	175644	Supply Voltage
92	P11.12	FAST / PU1 / VFLEX / ES	7138485	322614	General-purpose I/O
93	VDD	Vx	7209999	175644	Supply Voltage
94	VSS	Vx	7302285	175644	Supply Voltage
95	P11.14	SLOW / PU1 / VFLEX / ES	7399503	322614	General-purpose I/O
96	P11.13	SLOW / PU1 / VFLEX / ES	7446501	175644	General-purpose I/O

Downloaded by IFXDMZ|par-zengzhe 12/02/2019 11:04:31

Table 2-63 Pad List (cont'd)

Number	Pad Name	Pad Type	X	Y	Comment
97	P11.15	SLOW / PU1 / VFLEX / ES	7493499	322614	General-purpose I/O
98	VSS	Vx	7567713	175644	Supply Voltage
99	VDD	Vx	7632711	322614	Supply Voltage
100	P10.0	SLOW / PU1 / VEXT / ES	7715709	322614	General-purpose I/O
101	P10.1	FAST / PU1 / VEXT / ES	7762707	175644	General-purpose I/O
102	P10.3	FAST / PU1 / VEXT / ES	7809705	322614	General-purpose I/O
103	P10.4	FAST / PU1 / VEXT / ES	7856703	175644	General-purpose I/O
104	P10.2	FAST / PU1 / VEXT / ES	7903701	322614	General-purpose I/O
105	VSS	Vx	7950699	175644	Supply Voltage
106	P10.6	SLOW / PU2 / VEXT / ES	7997697	322614	General-purpose I/O
107	P10.5	SLOW / PU2 / VEXT / ES	8044695	175644	General-purpose I/O
108	P10.7	SLOW / PU1 / VEXT / ES	8091693	322614	General-purpose I/O
109	VEXT	Vx	8138691	175644	Supply Voltage
110	P10.9	SLOW / PU1 / VEXT / ES	8185689	322614	General-purpose I/O
111	P10.8	SLOW / PU1 / VEXT / ES	8232687	175644	General-purpose I/O
112	VDDSB	Vx	8279685	322614	Supply Voltage
113	VSS	Vx	8326683	175644	Supply Voltage
114	P10.10	SLOW / PU1 / VEXT / ES	8389701	322614	General-purpose I/O
115	VSS	Vx	8436699	175644	Supply Voltage
116	P10.11	SLOW / PU1 / VEXT / ES	8483697	322614	General-purpose I/O
117	VDD	Vx	8548695	175644	Supply Voltage
118	P10.13	SLOW / PU1 / VEXT / ES	8613693	322614	General-purpose I/O
119	VSS	Vx	8685513	175644	Supply Voltage
120	VDDSB	Vx	8732511	322614	Supply Voltage
121	VDDSB	Vx	8815509	322614	Supply Voltage
122	VSS	Vx	8862507	175644	Supply Voltage

Downloaded by IFXDMZ|par-zengzhe 12/02/2019 11:04:31

Table 2-63 Pad List (cont'd)

Number	Pad Name	Pad Type	X	Y	Comment
123	P10.14	SLOW / PU1 / VEXT / ES	8909505	322614	General-purpose I/O
124	VEXT	Vx	8956503	175644	Supply Voltage
125	P10.15	SLOW / PU1 / VEXT / ES	9003501	322614	General-purpose I/O
126	P51.0	LVDS_RX / HighZ / VEXT / ES	9067500	175644	General-purpose I/O
127	P51.1	LVDS_RX / HighZ / VEXT / ES	9148500	175644	General-purpose I/O
128	P51.2	LVDS_RX / HighZ / VEXT / ES	9229500	175644	General-purpose I/O
129	P51.3	LVDS_RX / HighZ / VEXT / ES	9310500	175644	General-purpose I/O
130	P51.4	LVDS_RX / HighZ / VEXT / ES	9391500	175644	General-purpose I/O
131	P51.5	LVDS_RX / HighZ / VEXT / ES	9472500	175644	General-purpose I/O
132	P51.6	LVDS_RX / HighZ / VEXT / ES	9589500	175644	General-purpose I/O
133	P51.7	LVDS_RX / HighZ / VEXT / ES	9670500	175644	General-purpose I/O
134	P51.8	LVDS_RX / HighZ / VEXT / ES	9751500	175644	General-purpose I/O
135	P51.9	LVDS_RX / HighZ / VEXT / ES	9832500	175644	General-purpose I/O
136	P51.10	LVDS_RX / HighZ / VEXT / ES	9913500	175644	General-purpose I/O
137	P51.11	LVDS_RX / HighZ / VEXT / ES	9994500	175644	General-purpose I/O
138	VDDSB	Vx	10085499	175644	Supply Voltage
139	VSS	Vx	10185741	175644	Supply Voltage
140	VEXT	Vx	10265796	255699	Supply Voltage

Downloaded by IFXDMZ|par-zengzhe 12/02/2019 11:04:31

Table 2-63 Pad List (cont'd)

Number	Pad Name	Pad Type	X	Y	Comment
141	VSS	Vx	10265796	356499	Supply Voltage
142	P50.0	LVDS_RX / HighZ / VEXT / ES	10265796	474300	General-purpose I/O
143	P50.1	LVDS_RX / HighZ / VEXT / ES	10265796	555300	General-purpose I/O
144	P50.2	LVDS_RX / HighZ / VEXT / ES	10265796	636300	General-purpose I/O
145	P50.3	LVDS_RX / HighZ / VEXT / ES	10265796	717300	General-purpose I/O
146	P50.4	LVDS_RX / HighZ / VEXT / ES	10265796	798300	General-purpose I/O
147	P50.5	LVDS_RX / HighZ / VEXT / ES	10265796	879300	General-purpose I/O
148	P50.6	LVDS_RX / HighZ / VEXT / ES	10265796	996300	General-purpose I/O
149	P50.7	LVDS_RX / HighZ / VEXT / ES	10265796	1077300	General-purpose I/O
150	P50.8	LVDS_RX / HighZ / VEXT / ES	10265796	1158300	General-purpose I/O
151	P50.9	LVDS_RX / HighZ / VEXT / ES	10265796	1239300	General-purpose I/O
152	P50.10	LVDS_RX / HighZ / VEXT / ES	10265796	1320300	General-purpose I/O
153	P50.11	LVDS_RX / HighZ / VEXT / ES	10265796	1401300	General-purpose I/O
154	VDDSB	Vx	10118826	1465299	Supply Voltage
155	VSS	Vx	10265796	1512297	Supply Voltage
156	P02.13	SLOW / PU1 / VEXT / ES	10118826	1586295	General-purpose I/O
157	VDD	Vx	10265796	1679499	Supply Voltage
158	P02.12	SLOW / PU1 / VEXT / ES	10118826	1751499	General-purpose I/O

Downloaded by IFXDMZlpar-zengzhe 12/02/2019 11:04:31

Table 2-63 Pad List (cont'd)

Number	Pad Name	Pad Type	X	Y	Comment
159	VEXT	Vx	10265796	1798497	Supply Voltage
160	P02.15	FAST / PU1 / VEXT / ES	10118826	1845495	General-purpose I/O
161	VSS	Vx	10265796	1892493	Supply Voltage
162	P02.14	SLOW / PU1 / VEXT / ES	10118826	1939491	General-purpose I/O
163	P02.9	SLOW / PU1 / VEXT / ES	10265796	1986489	General-purpose I/O
164	P02.4	FAST / PU1 / VEXT / ES	10118826	2033487	General-purpose I/O
165	P02.0	FAST / PU1 / VEXT / ES	10265796	2080485	General-purpose I/O
166	P02.5	FAST / PU1 / VEXT / ES	10118826	2127483	General-purpose I/O
167	P02.1	SLOW / PU1 / VEXT / ES	10265796	2174481	General-purpose I/O
168	P01.0	SLOW / PU1 / VEXT / ES	10118826	2221479	General-purpose I/O
169	VSS	Vx	10265796	2292975	Supply Voltage
170	VSS	Vx	10265796	2411199	Supply Voltage
171	VDDSB	Vx	10118826	2458197	Supply Voltage
172	P02.11	SLOW / PU1 / VEXT / ES	10265796	2505195	General-purpose I/O
173	P02.6	FAST / PU1 / VEXT / ES	10118826	2552193	General-purpose I/O
174	P02.2	FAST / PU1 / VEXT / ES	10265796	2599191	General-purpose I/O
175	P01.1	SLOW / PU1 / VEXT / ES	10118826	2646189	General-purpose I/O
176	P02.3	SLOW / PU1 / VEXT / ES	10265796	2693187	General-purpose I/O
177	P01.2	SLOW / PU1 / VEXT / ES	10118826	2740185	General-purpose I/O
178	VDD	Vx	10265796	2831499	Supply Voltage
179	VDD	Vx	10265796	2921499	Supply Voltage
180	P02.7	FAST / PU1 / VEXT / ES	10265796	3037437	General-purpose I/O
181	VSS	Vx	10265796	3146499	Supply Voltage
182	P01.8	SLOW / PU1 / VEXT / ES	10118826	3285567	General-purpose I/O
183	P02.10	SLOW / PU1 / VEXT / ES	10265796	3332565	General-purpose I/O

Downloaded by IFXDMZ|par-zengzhe 12/02/2019 11:04:31

Table 2-63 Pad List (cont'd)

Number	Pad Name	Pad Type	X	Y	Comment
184	P01.9	SLOW / PU1 / VEXT / ES	10118826	3379563	General-purpose I/O
185	P01.4	SLOW / PU1 / VEXT / ES	10265796	3426561	General-purpose I/O
186	P02.8	SLOW / PU1 / VEXT / ES	10118826	3473559	General-purpose I/O
187	VSS	Vx	10265796	3596553	Supply Voltage
188	VDDSB	Vx	10118826	3643551	Supply Voltage
189	VEXT	Vx	10265796	3708549	Supply Voltage
190	P01.11	SLOW / PU1 / VEXT / ES	10118826	3755547	General-purpose I/O
191	VSS	Vx	10265796	3802545	Supply Voltage
192	P01.10	SLOW / PU1 / VEXT / ES	10118826	3849543	General-purpose I/O
193	P01.3	SLOW / PU1 / VEXT / ES	10265796	3896541	General-purpose I/O
194	P00.0	FAST / PU1 / VEXT / ES	10118826	3943539	General-purpose I/O
195	P01.6	FAST / PU1 / VEXT / ES	10265796	3990537	General-purpose I/O
196	P01.13	FAST / PU1 / VEXT / ES	10118826	4037535	General-purpose I/O
197	P01.5	SLOW / PU1 / VEXT / ES	10265796	4084533	General-purpose I/O
198	P01.12	FAST / PU1 / VEXT / ES	10118826	4131531	General-purpose I/O
199	VDD	Vx	10265796	4225527	Supply Voltage
200	P01.15	SLOW / PU1 / VEXT / ES	10118826	4319523	General-purpose I/O
201	VSS	Vx	10265796	4413519	Supply Voltage
202	VDDSB	Vx	10118826	4460517	Supply Voltage
203	VDDSB	Vx	10118826	4554513	Supply Voltage
204	VSS	Vx	10265796	4601511	Supply Voltage
205	P01.14	FAST / PU1 / VEXT / ES	10118826	4687515	General-purpose I/O
206	RESERVED	Vx	10265796	4734513	Must be bonded to VSS
207	P00.13	FAST / PU1 / VEXT / ES	10118826	4781511	General-purpose I/O
208	VDD	Vx	10265796	4875507	Supply Voltage
209	P00.15	FAST / PU1 / VEXT / ES	10118826	4969503	General-purpose I/O

Downloaded by IFXDMZ|par-zengzhe 12/02/2019 11:04:31

Table 2-63 Pad List (cont'd)

Number	Pad Name	Pad Type	X	Y	Comment
210	P01.7	FAST / PU1 / VEXT / ES	10265796	5016501	General-purpose I/O
211	P00.14	SLOW / PU1 / VEXT / ES	10118826	5063499	General-purpose I/O
212	VSS	Vx	10265796	5153499	Supply Voltage
213	VDD	Vx	10265796	5243499	Supply Voltage
214	VDD	Vx	10265796	5333499	Supply Voltage
215	P00.1	SLOW / PU1 / VEXT / ES	10265796	5471442	General-purpose I/O
216	P00.2	SLOW / PU1 / VEXT / ES1	10118826	5518440	General-purpose I/O
217	P00.3	SLOW / PU1 / VEXT / ES1	10265796	5565438	General-purpose I/O
218	P00.4	SLOW / PU1 / VEXT / ES1	10118826	5612436	General-purpose I/O
219	VSS	Vx	10265796	5659434	Supply Voltage
220	P00.5	SLOW / PU1 / VEXT / ES1	10118826	5706432	General-purpose I/O
221	VEXT	Vx	10265796	5753430	Supply Voltage
222	P00.6	SLOW / PU1 / VEXT / ES1	10118826	5800428	General-purpose I/O
223	P00.7	SLOW / PU1 / VEXT / ES1	10265796	5847426	General-purpose I/O
224	P00.8	SLOW / PU1 / VEXT / ES1	10118826	5894424	General-purpose I/O
225	P00.9	SLOW / PU1 / VEXT / ES1	10265796	5941422	General-purpose I/O
226	P00.10	SLOW / PU1 / VEXT / ES1	10118826	5988420	General-purpose I/O
227	P00.11	SLOW / PU1 / VEXT / ES1	10265796	6035418	General-purpose I/O
228	P00.12	SLOW / PU1 / VEXT / ES1	10118826	6082416	General-purpose I/O
229	AN47	D / HighZ / VDDM	10265796	6156630	Analog Input 47
230	VDDM	Vx	10118826	6203628	Supply Voltage
231	VSSM	Vx	10265796	6250626	Supply Voltage
232	AN46	D / HighZ / VDDM	10118826	6297624	Analog Input 46
233	AN45	D / HighZ / VDDM	10265796	6344622	Analog Input 45
234	VDDM	Vx	10118826	6391620	Supply Voltage

Downloaded by IFXDMZ|par-zengzhe 12/02/2019 11:04:31

Table 2-63 Pad List (cont'd)

Number	Pad Name	Pad Type	X	Y	Comment
235	VSSM	Vx	10265796	6438618	Supply Voltage
236	AN44	D / HighZ / VDDM	10118826	6485616	Analog Input 44
237	VAREF5	Vx	10265796	6532614	Supply Voltage
238	VAREF4	Vx	10118826	6594615	Supply Voltage
239	VAGND5	Vx	10265796	6656616	Supply Voltage
240	VAGND4	Vx	10118826	6718617	Supply Voltage
241	AN43	D / HighZ / VDDM	10265796	6765615	Analog Input 43
242	AN42	D / HighZ / VDDM	10118826	6812613	Analog Input 42
243	VSSM	Vx	10265796	6859611	Supply Voltage
244	VDDM	Vx	10118826	6906609	Supply Voltage
245	AN41	D / HighZ / VDDM	10265796	6953607	Analog Input 41
246	AN40	D / HighZ / VDDM	10118826	7000605	Analog Input 40
247	VSSM	Vx	10265796	7047603	Supply Voltage
248	AN39/P40.9	S / HighZ / VDDM	10118826	7094601	Analog Input 39
249	VDDM_EXT_CONVPAD	Vx	10265796	7141599	Supply Voltage
250	AN38/P40.8	S / HighZ / VDDM	10118826	7188597	Analog Input 38
251	AN37/P40.7	S / HighZ / VDDM	10265796	7235595	Analog Input 37
252	AN36/P40.6	S / HighZ / VDDM	10118826	7282593	Analog Input 36
253	AN35	D / HighZ / VDDM	10265796	7329591	Analog Input 35
254	AN34	D / HighZ / VDDM	10118826	7376589	Analog Input 34
255	AN33/P40.5	S / HighZ / VDDM	10265796	7423587	Analog Input 33
256	AN32/P40.4	S / HighZ / VDDM	10118826	7470585	Analog Input 32
257	VAREF3	Vx	10265796	7517583	Supply Voltage
258	VAREF2	Vx	10118826	7579584	Supply Voltage
259	VAGND3	Vx	10265796	7641585	Supply Voltage
260	VAGND2	Vx	10118826	7703586	Supply Voltage

Downloaded by IFXDMZlpar-zengzhe 12/02/2019 11:04:31

Table 2-63 Pad List (cont'd)

Number	Pad Name	Pad Type	X	Y	Comment
261	AN73	D / HighZ / VDDM	10265796	7750584	Analog Input 73
262	AN72	D / HighZ / VDDM	10118826	7797582	Analog Input 72
263	AN71/P41.3	S / HighZ / VDDM	10265796	7844580	Analog Input 71
264	AN70/P41.2	S / HighZ / VDDM	10118826	7891578	Analog Input 70
265	AN69/P41.1	S / HighZ / VDDM	10265796	7938576	Analog Input 69
266	AN68/P41.0	S / HighZ / VDDM	10118826	7985574	Analog Input 68
267	AN67/P40.15	S / HighZ / VDDM	10265796	8032572	Analog Input 67
268	AN66	D / HighZ / VDDM	10118826	8079570	Analog Input 66
269	AN65	D / HighZ / VDDM	10265796	8126568	Analog Input 65
270	VDDM_EXT_CONVIF	Vx	10118826	8173566	Supply Voltage
271	VSSM_CONVIF	Vx	10265796	8220564	Supply Voltage
272	AN64/P41.8	S / HighZ / VDDM	10118826	8267562	Analog Input 64
273	AN63/P41.7	S / HighZ / VDDM	10265796	8314560	Analog Input 63
274	AN62/P41.6	S / HighZ / VDDM	10118826	8361558	Analog Input 62
275	AN61	D / HighZ / VDDM	10265796	8408556	Analog Input 61
276	AN60	D / HighZ / VDDM	10118826	8455554	Analog Input 60
277	AN59	D / HighZ / VDDM	10265796	8502552	Analog Input 59
278	AN58	D / HighZ / VDDM	10118826	8549550	Analog Input 58
279	AN57	D / HighZ / VDDM	10265796	8596548	Analog Input 57
280	AN56	D / HighZ / VDDM	10118826	8643546	Analog Input 56
281	AN55/P41.5	S / HighZ / VDDM	10265796	8690544	Analog Input 55

Downloaded by IFXDMZ|par-zengzhe 12/02/2019 11:04:31

Table 2-63 Pad List (cont'd)

Number	Pad Name	Pad Type	X	Y	Comment
282	AN54/P41.4	S / HighZ / VDDM	10118826	8737542	Analog Input 54
283	AN53	D / HighZ / VDDM	10265796	8784540	Analog Input 53
284	AN52	D / HighZ / VDDM	10118826	8831538	Analog Input 52
285	AN51	D / HighZ / VDDM	10265796	8878536	Analog Input 51
286	AN50	D / HighZ / VDDM	10265796	8958537	Analog Input 50
287	AN49	D / HighZ / VDDM	10265796	9038538	Analog Input 49
288	AN48	D / HighZ / VDDM	10265796	9118539	Analog Input 48
289	AN31	D / HighZ / VDDM	10194939	9189396	Analog Input 31
290	AN30	D / HighZ / VDDM	10114938	9189396	Analog Input 30
291	AN29/P40.14	S / HighZ / VDDM	10034937	9189396	Analog Input 29
292	AN28/P40.13	S / HighZ / VDDM	9954936	9189396	Analog Input 28
293	AN27/P40.3	S / HighZ / VDDM	9907938	9042426	Analog Input 27
294	AN26/P40.2	S / HighZ / VDDM	9860940	9189396	Analog Input 26
295	AN25/P40.1	S / HighZ / VDDM	9813942	9042426	Analog Input 25
296	AN24/P40.0	S / HighZ / VDDM	9766944	9189396	Analog Input 24
297	AN23	D / HighZ / VDDM	9719946	9042426	Analog Input 23
298	AN22	D / HighZ / VDDM	9672948	9189396	Analog Input 22
299	AN21	D / HighZ / VDDM	9625950	9042426	Analog Input 21
300	AN20	D / HighZ / VDDM	9578952	9189396	Analog Input 20
301	AN19/P40.12	S / HighZ / VDDM	9531954	9042426	Analog Input 19
302	AN18/P40.11	S / HighZ / VDDM	9484956	9189396	Analog Input 18

Downloaded by IFXDMZ|par-zengzhe 12/02/2019 11:04:31

Table 2-63 Pad List (cont'd)

Number	Pad Name	Pad Type	X	Y	Comment
303	AN17/P40.10	S / HighZ / VDDM	9437958	9042426	Analog Input 17
304	AN16	D / HighZ / VDDM	9390960	9189396	Analog Input 16
305	AN15	D / HighZ / VDDM	9343962	9042426	Analog Input 15
306	VAGND1	Vx	9296964	9189396	Supply Voltage
307	VAGND0	Vx	9249966	9042426	Supply Voltage
308	VAREF1	Vx	9202968	9189396	Supply Voltage
309	VAREF0	Vx	9155970	9042426	Supply Voltage
310	AN14	D / HighZ / VDDM	9108972	9189396	Analog Input 14
311	VDDM	Vx	9061974	9042426	Supply Voltage
312	VSSM	Vx	9014976	9189396	Supply Voltage
313	AN13	D / HighZ / VDDM	8967978	9042426	Analog Input 13
314	VSSM	Vx	8920980	9189396	Supply Voltage
315	VDDM	Vx	8873982	9042426	Supply Voltage
316	AN12	D / HighZ / VDDM	8826984	9189396	Analog Input 12
317	AN11	D / HighZ / VDDM	8779986	9042426	Analog Input 11
318	AN10	D / HighZ / VDDM	8732988	9189396	Analog Input 10
319	AN9	D / HighZ / VDDM	8685990	9042426	Analog Input 9
320	AN8	D / HighZ / VDDM	8638992	9189396	Analog Input 8
321	AN7	D / HighZ / VDDM	8591994	9042426	Analog Input 7
322	AN6	D / HighZ / VDDM	8544996	9189396	Analog Input 6
323	AN5	D / HighZ / VDDM	8497998	9042426	Analog Input 5
324	AN4	D / HighZ / VDDM	8451000	9189396	Analog Input 4
325	AN3	D / HighZ / VDDM	8404002	9042426	Analog Input 3
326	AN2	D / HighZ / VDDM	8357004	9189396	Analog Input 2
327	AN1	D / HighZ / VDDM	8310006	9042426	Analog Input 1

Downloaded by IFXDMZlpar-zengzhe 12/02/2019 11:04:31

Table 2-63 Pad List (cont'd)

Number	Pad Name	Pad Type	X	Y	Comment
328	AN0	D / HighZ / VDDM	8263008	9189396	Analog Input 0
329	VEVRSB	Vx	8176041	9042426	Supply Voltage
330	VSS	Vx	8104041	9189396	Supply Voltage
331	VDD	Vx	8057043	9042426	Supply Voltage
332	VSS	Vx	8010045	9189396	Supply Voltage
333	AGBTCLKN (VSS)	LVDS_RX / VEXT	7888959	9189441	AGBT Input;(TC3xx devices without AGBT: VSS)
334	AGBTCLKP (VSS)	LVDS_RX / VEXT	7807869	9189441	AGBT Input;(TC3xx devices without AGBT: VSS)
335	VEXT	Vx	7726959	9189441	Supply Voltage
336	VSS	Vx	7645959	9189441	Supply Voltage
337	AGBTTXN (VSS)	LVDS_TX / VEXT	7538027	9189441	AGBT Output;(TC3xx devices without AGBT: VSS)
338	AGBTTXP (VSS)	LVDS_TX / VEXT	7456937	9189441	AGBT Output;(TC3xx devices without AGBT: VSS)
339	AGBTERR (VSS)	FAST / PD / VEXT	7266739	9189302	AGBT Input;(TC3xx devices without AGBT: VSS)
340	VDD	Vx	7168018	9042426	Supply Voltage
341	VSS	Vx	7121020	9189396	Supply Voltage
342	P33.1	SLOW / PU1 / VEVRSB / ES5	7071741	9042426	General-purpose I/O
343	P33.0	SLOW / PU1 / VEVRSB / ES5	7024743	9189396	General-purpose I/O
344	P33.3	SLOW / PU1 / VEVRSB / ES5	6977745	9042426	General-purpose I/O
345	P33.2	SLOW / PU1 / VEVRSB / ES5	6930747	9189396	General-purpose I/O
346	P33.5	SLOW / PU1 / VEVRSB / ES5	6883749	9042426	General-purpose I/O
347	P34.1	SLOW / PU1 / VEVRSB / ES5	6836751	9189396	General-purpose I/O
348	P33.4	SLOW / PU1 / VEVRSB / ES5	6789753	9042426	General-purpose I/O
349	P34.3	SLOW / PU1 / VEVRSB / ES	6742755	9189396	General-purpose I/O

Downloaded by IFXDMZ|par-zengzhe 12/02/2019 11:04:31

Table 2-63 Pad List (cont'd)

Number	Pad Name	Pad Type	X	Y	Comment
350	P33.7	SLOW / PU1 / VEVRSB / ES5	6695757	9042426	General-purpose I/O
351	VSS	Vx	6605559	9189396	Supply Voltage
352	VDD	Vx	6558561	9042426	Supply Voltage
353	P34.2	SLOW / PU1 / VEVRSB / ES	6511563	9189396	General-purpose I/O
354	P33.6	SLOW / PU1 / VEVRSB / ES5	6464565	9042426	General-purpose I/O
355	VSS	Vx	6417567	9189396	Supply Voltage
356	P33.9	SLOW / PU1 / VEVRSB / ES5	6370569	9042426	General-purpose I/O
357	VEVRSB	Vx	6323571	9189396	Supply Voltage
358	P33.8	FAST / HighZ / VEVRSB	6276573	9042426	General-purpose I/O
359	P34.5	FAST / PU1 / VEVRSB / ES	6229575	9189396	General-purpose I/O
360	P33.11	FAST / PU1 / VEVRSB / ES5	6182577	9042426	General-purpose I/O
361	P34.4	SLOW / PU1 / VEVRSB / ES	6135579	9189396	General-purpose I/O
362	P33.10	FAST / PU1 / VEVRSB / ES5	6088581	9042426	General-purpose I/O
363	P33.15	SLOW / PU1 / VEVRSB / ES5	6041583	9189396	General-purpose I/O
364	P33.13	FAST / PU1 / VEVRSB / ES5	5994585	9042426	General-purpose I/O
365	P33.14	FAST / PU1 / VEVRSB / ES5	5947587	9189396	General-purpose I/O
366	VEVRSB	Vx	5853591	9042426	Supply Voltage
367	VEVRSB	Vx	5806593	9189396	Supply Voltage
368	P33.12	FAST / PU1 / VEVRSB / ES5	5759595	9042426	General-purpose I/O
369	VSS	Vx	5712597	9189396	Supply Voltage
370	VEXT	Vx	5629383	9042426	Supply Voltage

Downloaded by IFXDMZ|par-zengzhe 12/02/2019 11:04:31

Table 2-63 Pad List (cont'd)

Number	Pad Name	Pad Type	X	Y	Comment
371	P32.1/VGATE 1P	SLOW / PU1 / VEXT / ES	5582385	9189396	General-purpose I/O
372	P32.1/VGATE 1P	Vx	5535387	9042426	DCDC P ch. MOSFET gate driver output
373	VSS	Vx	5488389	9189396	Supply Voltage
374	P32.0/VGATE 1N	Vx	5441391	9042426	DCDC N ch. MOSFET gate driver output
375	P32.0/VGATE 1N	SLOW / PU1 / VEXT / ES	5394393	9189396	General-purpose I/O
376	VDD	Vx	5287941	9189396	Supply Voltage
377	VSS	Vx	5197941	9189396	Supply Voltage
381	RESERVED	Vx	4747941	9189396	Must be bonded to VSS
383	VDD	Vx	4621941	9189396	Supply Voltage
384	VDD	Vx	4504941	9189396	Supply Voltage
386	VSS	Vx	4414941	9189396	Supply Voltage
387	VSS	Vx	4306941	9189396	Supply Voltage
388	VSS	Vx	4171941	9189396	Supply Voltage
389	VDD	Vx	4036941	9189396	Supply Voltage
390	P32.2	SLOW / PU1 / VEXT / ES	3915927	9042426	General-purpose I/O
391	P32.5	SLOW / PU1 / VEXT / ES	3868929	9189396	General-purpose I/O
392	P32.4	FAST / PU1 / VEXT / ES	3821931	9042426	General-purpose I/O
393	VSS	Vx	3774933	9189396	Supply Voltage
394	P32.3	SLOW / PU1 / VEXT / ES	3727935	9042426	General-purpose I/O
395	VEXT	Vx	3680937	9189396	Supply Voltage
396	P32.7	SLOW / PU1 / VEXT / ES	3633939	9042426	General-purpose I/O
397	P32.6	SLOW / PU1 / VEXT / ES	3586941	9189396	General-purpose I/O
398	VDD	Vx	3496941	9189396	Supply Voltage
399	VDD	Vx	3406941	9189396	Supply Voltage
400	VDD	Vx	3316941	9189396	Supply Voltage
401	VSS	Vx	3226941	9189396	Supply Voltage
402	VSS	Vx	3136941	9189396	Supply Voltage
403	VSS	Vx	3046941	9189396	Supply Voltage
404	VDD	Vx	2999943	9042426	Supply Voltage
405	VDD	Vx	2844441	9189396	Supply Voltage

Downloaded by IFXDMZ|par-zengzhe 12/02/2019 11:04:31

Table 2-63 Pad List (cont'd)

Number	Pad Name	Pad Type	X	Y	Comment
406	VSS	Vx	2754441	9189396	Supply Voltage
407	P31.0	FAST / PU1 / VEBU / ES	2653911	9189396	General-purpose I/O
408	P31.1	FAST / PU1 / VEBU / ES	2606913	9042426	General-purpose I/O
409	P31.2	FAST / PU1 / VEBU / ES	2559915	9189396	General-purpose I/O
410	P31.3	FAST / PU1 / VEBU / ES	2512917	9042426	General-purpose I/O
411	VSS	Vx	2465919	9189396	Supply Voltage
412	P31.4	FAST / PU1 / VEBU / ES	2418921	9042426	General-purpose I/O
413	P31.5	FAST / PU1 / VEBU / ES	2371923	9189396	General-purpose I/O
414	P31.6	FAST / PU1 / VEBU / ES	2324925	9042426	General-purpose I/O
415	P31.7	FAST / PU1 / VEBU / ES	2277927	9189396	General-purpose I/O
416	P31.8	FAST / PU1 / VEBU / ES	2230929	9042426	General-purpose I/O
417	VEBU	Vx	2183931	9189396	Supply Voltage
418	P31.9	FAST / PU1 / VEBU / ES	2136933	9042426	General-purpose I/O
419	P31.10	FAST / PU1 / VEBU / ES	2089935	9189396	General-purpose I/O
420	P31.11	FAST / PU1 / VEBU / ES	2042937	9042426	General-purpose I/O
421	P31.14	FAST / PU1 / VEBU / ES	1995939	9189396	General-purpose I/O
422	P31.12	FAST / PU1 / VEBU / ES	1948941	9042426	General-purpose I/O
423	VDD	Vx	1858941	9189396	Supply Voltage
424	VSS	Vx	1768941	9189396	Supply Voltage
425	P31.13	FAST / PU1 / VEBU / ES	1679913	9042426	General-purpose I/O
426	P31.15	FAST / PU1 / VEBU / ES	1632915	9189396	General-purpose I/O
427	P30.0	FAST / PU1 / VEBU / ES	1585917	9042426	General-purpose I/O
428	P30.1	FAST / PU1 / VEBU / ES	1538919	9189396	General-purpose I/O

Downloaded by IFXDMZlpar-zengzhe 12/02/2019 11:04:31

Table 2-63 Pad List (cont'd)

Number	Pad Name	Pad Type	X	Y	Comment
429	P30.2	FAST / PU1 / VEBU / ES	1491921	9042426	General-purpose I/O
430	P30.3	FAST / PU1 / VEBU / ES	1444923	9189396	General-purpose I/O
431	P30.4	FAST / PU1 / VEBU / ES	1397925	9042426	General-purpose I/O
432	VEBU	Vx	1350927	9189396	Supply Voltage
433	P30.5	FAST / PU1 / VEBU / ES	1303929	9042426	General-purpose I/O
434	P30.6	FAST / PU1 / VEBU / ES	1256931	9189396	General-purpose I/O
435	P30.7	FAST / PU1 / VEBU / ES	1209933	9042426	General-purpose I/O
436	P30.8	FAST / PU1 / VEBU / ES	1162935	9189396	General-purpose I/O
437	P30.9	FAST / PU1 / VEBU / ES	1115937	9042426	General-purpose I/O
438	VSS	Vx	1068939	9189396	Supply Voltage
439	P30.10	FAST / PU1 / VEBU / ES	1021941	9042426	General-purpose I/O
440	VSS	Vx	931941	9189396	Supply Voltage
441	VDD	Vx	841941	9189396	Supply Voltage
442	P30.11	FAST / PU1 / VEBU / ES	754137	9042426	General-purpose I/O
443	P30.12	FAST / PU1 / VEBU / ES	707139	9189396	General-purpose I/O
444	P30.15	FAST / PU1 / VEBU / ES	660141	9042426	General-purpose I/O
445	P30.13	FAST / PU1 / VEBU / ES	559341	9189396	General-purpose I/O
446	P30.14	FAST / PU1 / VEBU / ES	458541	9189396	General-purpose I/O
447	P26.0	SLOW / PU1 / VEBU / ES	357741	9189396	General-purpose I/O
448	P25.0	FAST / PU1 / VEBU / ES	256941	9189396	General-purpose I/O
449	P25.1	FAST / PU1 / VEBU / ES	175644	9109341	General-purpose I/O
450	P25.2	FAST / PU1 / VEBU / ES	175644	9008541	General-purpose I/O
451	P25.3	FAST / PU1 / VEBU / ES	175644	8907741	General-purpose I/O

Downloaded by IFXDMZlpar-zengzhe 12/02/2019 11:04:31

Table 2-63 Pad List (cont'd)

Number	Pad Name	Pad Type	X	Y	Comment
452	P25.4	FAST / PU1 / VEBU / ES	175644	8806941	General-purpose I/O
453	P25.5	FAST / PU1 / VEBU / ES	175644	8706141	General-purpose I/O
454	P25.7	FAST / PU1 / VEBU / ES	322614	8659143	General-purpose I/O
455	VEBU	Vx	175644	8612145	Supply Voltage
456	P25.9	FAST / PU1 / VEBU / ES	322614	8565147	General-purpose I/O
457	VSS	Vx	175644	8518149	Supply Voltage
458	P25.8	FAST / PU1 / VEBU / ES	322614	8471151	General-purpose I/O
459	VDD	Vx	175644	8410653	Supply Voltage
460	P25.11	FAST / PU1 / VEBU / ES	322614	8350155	General-purpose I/O
461	VSS	Vx	175644	8289657	Supply Voltage
462	P25.10	FAST / PU1 / VEBU / ES	322614	8229159	General-purpose I/O
463	P25.12	FAST / PU1 / VEBU / ES	175644	8182161	General-purpose I/O
464	P25.13	FAST / PU1 / VEBU / ES	322614	8135163	General-purpose I/O
465	P25.14	FAST / PU1 / VEBU / ES	175644	8088165	General-purpose I/O
466	P25.15	FAST / PU1 / VEBU / ES	322614	8041167	General-purpose I/O
467	P25.6	FAST / PU1 / VEBU / ES	175644	7994169	General-purpose I/O
468	P24.1	FAST / PU1 / VEBU / ES	322614	7947171	General-purpose I/O
469	P24.0	FAST / PU1 / VEBU / ES	175644	7900173	General-purpose I/O
470	P24.3	FAST / PU1 / VEBU / ES	322614	7853175	General-purpose I/O
471	VDD	Vx	175644	7780041	Supply Voltage
472	P24.2	FAST / PU1 / VEBU / ES	322614	7708041	General-purpose I/O
473	VSS	Vx	175644	7645041	Supply Voltage
474	P24.5	FAST / PU1 / VEBU / ES	322614	7577667	General-purpose I/O
475	P24.4	FAST / PU1 / VEBU / ES	175644	7530669	General-purpose I/O

Downloaded by IFXDMZ|par-zengzhe 12/02/2019 11:04:31

Table 2-63 Pad List (cont'd)

Number	Pad Name	Pad Type	X	Y	Comment
476	P24.7	FAST / PU1 / VEBU / ES	322614	7483671	General-purpose I/O
477	P24.6	FAST / PU1 / VEBU / ES	175644	7436673	General-purpose I/O
478	P24.9	FAST / PU1 / VEBU / ES	322614	7389675	General-purpose I/O
479	VEBU	Vx	175644	7342677	Supply Voltage
480	P24.11	FAST / PU1 / VEBU / ES	322614	7295679	General-purpose I/O
481	VSS	Vx	175644	7248681	Supply Voltage
482	P24.13	FAST / PU1 / VEBU / ES	322614	7201683	General-purpose I/O
483	P24.8	FAST / PU1 / VEBU / ES	175644	7154685	General-purpose I/O
484	P24.14	FAST / PU1 / VEBU / ES	322614	7107687	General-purpose I/O
485	P24.10	FAST / PU1 / VEBU / ES	175644	7060689	General-purpose I/O
486	P24.15	FAST / PU1 / VEBU / ES	322614	7013691	General-purpose I/O
487	P24.12	FAST / PU1 / VEBU / ES	175644	6966693	General-purpose I/O
488	P23.0	SLOW / PU1 / VEXT / ES	322614	6892479	General-purpose I/O
489	VDD	Vx	175644	6785541	Supply Voltage
490	VDD	Vx	175644	6695541	Supply Voltage
491	P23.2	SLOW / PU1 / VEXT / ES	322614	6592041	General-purpose I/O
492	VSS	Vx	175644	6488541	Supply Voltage
493	VSS	Vx	175644	6398541	Supply Voltage
494	P23.1	FAST / PU1 / VEXT / ES	322614	6295041	General-purpose I/O
495	P23.5	FAST / PU1 / VEXT / ES	175644	6248043	General-purpose I/O
496	P23.4	FAST / PU1 / VEXT / ES	322614	6201045	General-purpose I/O
497	VSS	Vx	175644	6154047	Supply Voltage
498	P23.3	SLOW / PU1 / VEXT / ES	322614	6107049	General-purpose I/O
499	P23.6	SLOW / PU1 / VEXT / ES	175644	6060051	General-purpose I/O
500	VEXT	Vx	322614	6013053	Supply Voltage

Downloaded by IFXDMZlpar-zengzhe 12/02/2019 11:04:31

Table 2-63 Pad List (cont'd)

Number	Pad Name	Pad Type	X	Y	Comment
501	P23.7	SLOW / PU1 / VEXT / ES	175644	5966055	General-purpose I/O
502	VDD	Vx	175644	5849541	Supply Voltage
503	VSS	Vx	175644	5759541	Supply Voltage
505	VDDOSC	Vx	348147	5664825	Supply Voltage
506	VSSOSC	Vx	179145	5617827	Supply Voltage
507	XTAL1	XTAL / VEXTOSC	179145	5458176	XTAL1. Main Oscillator/PLL/Clock Generator Input.
508	XTAL2	XTAL / VEXTOSC	179145	5364180	XTAL2. Main Oscillator/PLL/Clock Generator OUTPUT
509	VSSOSC	—	179145	5204529	Supply Voltage
510	VEXTOSC	Vx	348147	5157531	Supply Voltage
512	P22.2	LVDS_TX / FAST / PU1 / VEXT / ES6	322614	4988520	General-purpose I/O
513	P22.3	LVDS_TX / FAST / PU1 / VEXT / ES6	322614	4894524	General-purpose I/O
514	VDD	Vx	322614	4783023	Supply Voltage
515	VSS	Vx	175644	4713525	Supply Voltage
516	P22.0	LVDS_TX / FAST / PU1 / VEXT / ES6	322614	4602024	General-purpose I/O
517	P22.1	LVDS_TX / FAST / PU1 / VEXT / ES6	322614	4508028	General-purpose I/O
518	P22.4	FAST / PU1 / VEXT / ES	175644	4396527	General-purpose I/O
519	P22.5	FAST / PU1 / VEXT / ES	322614	4349529	General-purpose I/O
520	P22.6	SLOW / PU1 / VEXT / ES	175644	4302531	General-purpose I/O
521	P22.7	SLOW / PU1 / VEXT / ES	322614	4255533	General-purpose I/O
522	VSS	Vx	175644	4208535	Supply Voltage
523	VEXT	Vx	322614	4161537	Supply Voltage
524	P22.8	SLOW / PU1 / VEXT / ES	175644	4114539	General-purpose I/O
525	P22.9	SLOW / PU1 / VEXT / ES	322614	4067541	General-purpose I/O

Downloaded by IFXDMZlpar-zengzhe 12/02/2019 11:04:31

Table 2-63 Pad List (cont'd)

Number	Pad Name	Pad Type	X	Y	Comment
526	VDD	Vx	175644	3977541	Supply Voltage
527	VSS	Vx	175644	3887541	Supply Voltage
528	P22.10	SLOW / PU1 / VEXT / ES	175644	3797037	General-purpose I/O
529	P22.11	SLOW / PU1 / VEXT / ES	322614	3750039	General-purpose I/O
530	DAPE0	FAST / PD2 / VEXT	175644	3703041	DAPE: DAPE0 Clock Input DAPE: DAPE0 clock input(PD Devices: NC)
531	$\overline{\text{TRST}}$	FAST / PU2 / VEXT	322614	3656043	JTAG Module Reset/Enable Input
532	VSS	Vx	175644	3609045	Supply Voltage
533	P21.0	LVDS_RX / FAST / PU1 / VEXT / ES	322614	3533994	General-purpose I/O
534	P21.1	LVDS_RX / FAST / PU1 / VEXT / ES	322614	3439998	General-purpose I/O
535	VDD	Vx	175644	3304647	Supply Voltage
536	P21.2	LVDS_RX / FAST / PU1 / VEXT / ES	322614	3211596	General-purpose I/O
537	P21.3	LVDS_RX / FAST / PU1 / VEXT / ES	322614	3117600	General-purpose I/O
538	VSS	Vx	175644	3024549	Supply Voltage
539	P21.4	LVDS_TX / FAST / PU1 / VEXT / ES6	322614	2913048	General-purpose I/O
540	P21.5	LVDS_TX / FAST / PU1 / VEXT / ES6	322614	2819052	General-purpose I/O
541	TMS	FAST / PD2 / VEXT	175644	2707551	JTAG Module State Machine Control Input
542	P20.0	FAST / PU1 / VEXT / ES	322614	2660553	General-purpose I/O
543	TCK	FAST / PD2 / VEXT	175644	2613555	JTAG Module Clock Input
544	P20.2	S / PU / VEXT	322614	2566557	General-purpose I/O This pin is latched at power on reset release to enter test mode.
545	VEXT	Vx	175644	2519559	Supply Voltage

Downloaded by IFXDMZ|par-zengzhe 12/02/2019 11:04:31

Table 2-63 Pad List (cont'd)

Number	Pad Name	Pad Type	X	Y	Comment
546	VDD	Vx	175644	2436561	Supply Voltage
547	VDD	Vx	175644	2346561	Supply Voltage
548	VSS	Vx	175644	2229561	Supply Voltage
549	P20.3	SLOW / PU1 / VEXT / ES	322614	2081727	General-purpose I/O
550	DAPE1	FAST / PD2 / VEXT	175644	2034729	DAPE: DAPE1 Data I/O DAPE: DAPE1 Data I/O(PD Devices: VSS)
551	P21.6/TDI	FAST / PD / PU2 / VEXT / ES3	322614	1987731	General-purpose I/O PD during Reset and in DAP/DAPE or JTAG mode. After Reset release and when not in DAP/DAPE or JTAG mode: PU. In Standby mode: HighZ.
552	DAPE2	FAST / PD2 / VEXT	175644	1940733	DAPE: DAPE2 Data I/O DAPE: DAPE2 Data I/O(PD Devices: VSS)
553	VEXT	Vx	322614	1893735	Supply Voltage
554	VSS	Vx	175644	1846737	Supply Voltage
555	P21.7/TDO	FAST / PU2 / VEXT / ES4	322614	1799739	General-purpose I/O
556	$\overline{\text{ESR1}}$	FAST / PU1 / VEXT	175644	1752741	ESR1 Port Pin input - can be used to trigger a reset or an NMI ESR1: External System Request Reset 1. Default NMI function. See also SCU chapter for details. Default after power-on can be different. See also SCU chapter ´Reset Control Unit´ and SCU_IOCR register description. PMS_EVRWUP: EVR Wakepup Pin
557	P20.8	FAST / PU1 / VEXT / ES	322614	1705743	General-purpose I/O
558	VDD	Vx	175644	1642725	Supply Voltage
559	VSS	Vx	175644	1557225	Supply Voltage
560	P20.1	SLOW / PU1 / VEXT / ES	322614	1494207	General-purpose I/O

Downloaded by IFXDMZ|par-zengzhe 12/02/2019 11:04:31

Table 2-63 Pad List (cont'd)

Number	Pad Name	Pad Type	X	Y	Comment
561	$\overline{\text{ESR0}}$	FAST / OD / VEXT	175644	1447209	ESR0 Port Pin input - can be used to trigger a reset or an NMI ESR0: External System Request Reset 0. Default configuration during and after reset is open-drain driver. The driver drives low during power-on reset. This is valid additionally after deactivation of PORST_N until the internal reset phase has finished. See also SCU chapter for details. Default after power-on can be different. See also SCU chapter ´Reset Control Unit´ and SCU_IOCR register description. PMS_EVRWUP: EVR Wakepup Pin
562	$\overline{\text{PORST}}$	PORST / PD / VEXT	322614	1400211	PORST pin input Power On Reset Input. Additional strong PD in case of power fail.
563	P20.6	SLOW / PU1 / VEXT / ES	175644	1353213	General-purpose I/O
564	P20.11	FAST / PU1 / VEXT / ES	322614	1306215	General-purpose I/O
565	P15.5	FAST / PU1 / VEXT / ES	175644	1259217	General-purpose I/O
566	P20.7	FAST / PU1 / VEXT / ES	322614	1212219	General-purpose I/O
567	VSS	Vx	175644	1165221	Supply Voltage
568	P20.10	FAST / PU1 / VEXT / ES	322614	1118223	General-purpose I/O
569	VEXT	Vx	175644	1071225	Supply Voltage
570	P20.13	FAST / PU1 / VEXT / ES	322614	1024227	General-purpose I/O
571	VDD	Vx	175644	968229	Supply Voltage
572	P20.12	FAST / PU1 / VEXT / ES	322614	912231	General-purpose I/O
573	VSS	Vx	175644	856233	Supply Voltage
574	P20.14	FAST / PU1 / VEXT / ES	322614	800235	General-purpose I/O

Downloaded by IFXDMZ|par-zengzhe 12/02/2019 11:04:31

Table 2-63 Pad List (cont'd)

Number	Pad Name	Pad Type	X	Y	Comment
575	P15.2	FAST / PU1 / VEXT / ES	175644	753237	General-purpose I/O
576	P15.0	FAST / PU1 / VEXT / ES	322614	706239	General-purpose I/O
577	P15.1	FAST / PU1 / VEXT / ES	175644	659241	General-purpose I/O
578	P15.3	FAST / PU1 / VEXT / ES	175644	558441	General-purpose I/O
579	P15.4	FAST / PU1 / VEXT / ES	175644	457641	General-purpose I/O
580	P15.6	FAST / PU1 / VEXT / ES	175644	356841	General-purpose I/O
581	P20.9	FAST / PU1 / VEXT / ES	175644	256041	General-purpose I/O

Downloaded by IFXDMZ|par-zengzhe 12/02/2019 11:04:31

2.5 Legend

The data in this chapter 2 match with the file TC39xed_IO_Spirit_v2.0.0.1.22.xml.

Column "Ctrl.":

I = Input (for GPIO port lines with IOCR bit field Selection PCx = $0XXX_B$)

O = Output (for GPIO port lines the ´O´ represents in most cases the port HWOUT function)

O0 = Output with IOCR bit field selection PCx = $1X000_B$

O1 = Output with IOCR bit field selection PCx = $1X001_B$ (ALT1)

O2 = Output with IOCR bit field selection PCx = $1X010_B$ (ALT2)

O3 = Output with IOCR bit field selection PCx = $1X011_B$ (ALT3)

O4 = Output with IOCR bit field selection PCx = $1X100_B$ (ALT4)

O5 = Output with IOCR bit field selection PCx = $1X101_B$ (ALT5)

O6 = Output with IOCR bit field selection PCx = $1X110_B$ (ALT6)

O7 = Output with IOCR bit field selection PCx = $1X111_B$ (ALT7)

Column "Buffer Type":

RFAST = Pad class RFAST (5V/3.3V)

FAST = Pad class FAST (5V/3.3V)

SLOW = Pad class SLOW (5V/3.3V)

LVDS_TX = Pad class LVDS Transmit

LVDS_RX = Pad class LVDS Receive

S = Pad class S (Analog Input overlayed with General Purpose Input)

D = Pad class D (Analog Input)

Porst = Porst input Pad

XTAL1 = XTAL1 input Pad

XTAL2 = XTAL2 input Pad

PU = with pull-up device connected during reset ($\overline{PORST}$ = 0)

PU1 = with pull-up device connected during reset ($\overline{PORST}$ = 0)[1)]

PU2 = with pull-up device connected during startup and reset, HighZ in Standby mode

PD = with pull-down device connected during reset ($\overline{PORST}$ = 0)

PD1 = with pull-down device connected during reset ($\overline{PORST}$ = 0)[1)]

PD2 = with pull-down device connected during startup, reset and normal operation, HighZ in Standby mode

OD = open drain during reset ($\overline{PORST}$ = 0)

ES = Supports Emergency Stop

ES1 = ES. ES can be overruled by VADC, control via P00_PCSR

ES2 = ES. ES can be overruled by DXCPL - DAP over CAN physical layer, No overruling for DXCM - Debug over CAN message

ES3 = ES. ES can be overruled by JTAG mode if this pin is used as TDI

ES4 = ES. ES can be overruled by JTAG or Three Pin DAP mode

1) The default state of GPIOs (Px.y) during and after PORST active is controllled via HWCFG6 (P14.4). Pls. see also chapter PMS, HWCFG[6].

Downloaded by IFXDMZ|par-zengzhe 12/02/2019 11:04:31

ES5 = ES. ES can be overruled by the Standby Controller - SCR - if implemented. Overruling can be disabled via the control register P33_PCSR and P34_PCSR

ES6 = ES. On LVDS TX pads the ES affects the pads only in CMOS mode, not in LVDS mode. Thus, only when LPCRx.TX_EN selects the CMOS Mode, the output is switched off in the ES event

Downloaded by IFXDMZ\par-zengzhe 12/02/2019 11:04:31

3 Electrical Specification

3.1 Parameter Interpretation

The parameters listed in this section partly represent the characteristics of the TC39x and partly its requirements on the system. To aid interpreting the parameters easily when evaluating them for a design, they are marked with an two-letter abbreviation in column “Symbol”:

- **CC**
  Such parameters indicate **C**ontroller **C**haracteristics which are a distinctive feature of the TC39x and must be regarded for a system design.
- **SR**
  Such parameters indicate **S**ystem **R**equirements which must be provided by the microcontroller system in which the TC39x designed in.

Downloaded by IFXDMZ|par-zengzhe 12/02/2019 11:04:31

3.2 Absolute Maximum Ratings

Stresses above the values listed under “Absolute Maximum Ratings” may cause permanent damage to the device. This is a stress rating only and functional operation of the device at these or any other conditions above those indicated in the Operational Conditions of this specification is not implied. Exposure to absolute maximum rating conditions may affect device reliability.

Table 3-1 Absolute Maximum Ratings

Parameter	Symbol	Values			Unit	Note / Test Condition
		Min.	Typ.	Max.		
Storage Temperature	T_{ST} SR	-65	-	150	°C	upto 65h @ T_J = 150°C
Voltage at V_{DD} power supply pins with respect to V_{SS} [1) 2)]	V_{DD} SR	-	-	1.65	V	upto 2.8h
		-	-	1.45	V	upto 72h
Voltage at V_{DDP3} power supply pins with respect to V_{SS}	V_{DDP3} SR	-	-	4.43	V	
Voltage at V_{DDM}, V_{EXT}, V_{FLEX} and V_{EVRSB} power supply pins with respect to V_{SS}	V_{DDM} SR	-	-	6.75	V	upto 2.8h
		-	-	5.6	V	upto 72h
Voltage on all analog and class S input pins with respect to V_{SS} [3)]	V_{IN} SR	-0.7	-	6.75	V	
Voltage on all other input pins with respect to V_{SS} [3)]	V_{IN} SR	-0.7	-	6.75	V	
Input current on any pin during overload condition [4)]	I_{IN} SR	-10	-	10	mA	
Absolute maximum sum of all input circuit currents during overload condition for a port group. [4)]	ΣI_{IN} SR	-100	-	100	mA	

1) Valid for cumulated for up to 2.8h and pulse forms followed a power supply switch on phase, where the rise and fall times are related to the system capacities and coils.

2) Due to EVRC output voltage oscillation during switch off phase V_{DD} can drop down to -0.72V. For V_{DD} an input level down to -0.72V during switch off phase will not cause any damage or reliability problem.

3) Voltages below V_{INmin} have no Impact to the device reliabiltiy as Long as the times and currents defined in section Pin Reliability in Overload for the affected pad(s) are not violated.

4) This parameter is an Absolute Maximum Rating. Exposure to Absolute Maximum Ratings for extended periods of time may damage the device.

Downloaded by IFXDMZ|par-zengzhe 12/02/2019 11:04:31

3.3 Pin Reliability in Overload

When receiving signals from higher voltage devices, low-voltage devices experience overload currents and voltages that go beyond their own IO power supplies specification.

The following table defines overload conditions that will not cause any negative reliability impact if all the following conditions are met:

- allowed time interval (defined in Note column) for overload condition is not exceeded. If no time limit is defined the allowed time includes both 'Operation Lifetime hours' and 'Inactive Lifetime hours'. The number of hours in **Table 3-76** and **Table 3-77** are examples only and the applicable numbers are defined by the customer profiles accepted by Infineon.
- **Operating Conditions** are met for
  - pad supply levels
  - temperature

If a pin current is out of the **Operating Conditions** but within the overload parameters, then the parameters functionality of this pin as stated in the Operating Conditions can no longer be guaranteed. Operation is still possible in most cases but with relaxed parameters.

Table 3-2 Overload Parameters

Parameter	Symbol	Values			Unit	Note / Test Condition
		Min.	Typ.	Max.		
Input current on any digital pin during overload condition	I_{IN}	-5	-	5	mA	except LVDS pins
		-15 [1)]	-	15 [1)]	mA	except LVDS pins; limited to max. 20 pulses with 1ms pulse length
Input current on LVDS pin during overload condition	I_{INLVDS}	-3	-	3	mA	
Input current on analog input pin during overload condition	I_{INANA}	-3	-	3	mA	
		-5	-	5	mA	limited to 60h over lifetime
Absolute sum of all analog input currents for analog inputs during overload conditon	I_{INSA}	-20	-	20	mA	
Absolute maximum sum of all input circuit currents during overload condition (digital and analog combined)	ΣI_{INS}	-100	-	100	mA	
Signal voltage over/undershoot at GPIOs	V_{OUS}	V_{SS} - 2	-	$V_{EXT/FLEX}$ + 2	V	limited to 60h over lifetime; Valid for non LVDS and analoge pads
Sum of all inactive device pin currents	I_{IDS}	-100	-	100	mA	
Static pin output current	I_{OUT} CC	-	-	2.5	mA	100% duty cycle; output driver = medium
		-	-	5	mA	100% duty cycle; output driver = strong

Downloaded by IFXDMZ|par-zengzhe 12/02/2019 11:04:31

Table 3-2 Overload Parameters (cont'd)

Parameter	Symbol	Values			Unit	Note / Test Condition
		Min.	Typ.	Max.		
Overload coupling factor for digital inputs, negative	K_{OVDN} CC	-	-	$3*10^{-4}$		Overload injected on GPIO non LVDS pad and affecting neighbor fast pads; -5mA < I_{IN} < 0mA
		-	-	$2*10^{-3}$		Overload injected on GPIO non LVDS pad and affecting neighbor slow pads VGASTE1N and VGATE1P; -5mA < I_{IN} < 0mA
		-	-	$1*10^{-4}$		Overload injected on GPIO non LVDS pad and affecting neighbor slow pads; -5mA < I_{IN} < 0mA
		-	-	0.8		Overload injected on LVDS RX pad and affecting neighbor LVDS pads
		-	-	0.5		Overload injected on LVDS TX pad and affecting neighbor LVDS pads
Overload coupling factor for digital inputs, positive	K_{OVDP} CC	-	-	$1.5*10^{-3}$		Overload injected on GPIO non LVDS pad and affecting neighbor GPIO non LVDS pads
		-	-	1		Overload injected on LVDS RX pad and affecting neighbor LVDS pads
		-	-	$5*10^{-3}$		Overload injected on LVDS TX pad and affecting neighbor LVDS pads
Overload coupling factor for analog inputs, negative [2)]	K_{OVAN} CC	-	-	$1*10^{-4}$		Analog inputs overlaid with slow pads or pull down diagnostics; -5mA < I_{IN} < 0mA
		-	-	$1*10^{-5}$		else; -5mA < I_{IN} < 0mA

Downloaded by IFXDMZ|par-zengzhe 12/02/2019 11:04:31

Table 3-2 Overload Parameters (cont'd)

Parameter	Symbol	Values			Unit	Note / Test Condition
		Min.	Typ.	Max.		
Overload coupling factor for analog inputs, positive [2)]	K_{OVAP} CC	-	-	$2*10^{-4}$		Analoge inputs overlaid with slow pads or pull down diagnostics; 0mA < I_{IN} < 5mA
		-	-	$2*10^{-5}$		else; 0mA < I_{IN} < 5mA

1) Reduced VADC / DSADC result accuracy and / or GPIO input levels (V_{IL} and V_{IH}) can differ from specified parameters.
2) Overload coupling on analog inputs is caused by parasitic effects between pads, input multiplexers and surrounding structures.
The given parameters have been verified for all permutations of channels. Also watch multiple connections of a pin to several channels.

Downloaded by IFXDMZ|par-zengzhe 12/02/2019 11:04:31

3.4 Operating Conditions

The following operating conditions must not be exceeded in order to ensure correct operation and reliability of the TC39x. All parameters specified in the following tables refer to these operating conditions, unless otherwise noticed.

Digital supply voltages applied to the TC39x must be static regulated voltages.

All parameters specified in the following tables refer to these operating conditions (see table below), unless otherwise noticed in the Note / Test Condition column.

Table 3-3 Operating Conditions

Parameter	Symbol	Values			Unit	Note / Test Condition
		Min.	Typ.	Max.		
SRI frequency	f_{SRI} SR	-	-	300	MHz	
CPU Frequency (All CPUs)	f_{CPUx} SR	-	-	300	MHz	
PLL0 output frequency	f_{PLL0} SR	20	-	300	MHz	
SPB frequency	f_{SPB} SR	-	-	100	MHz	
FSI2 frequency	f_{FSI2} SR	-	-	300	MHz	
FSI frequency	f_{FSI} SR	20	-	100	MHz	
GTM frequency	f_{GTM} SR	-	-	200	MHz	
STM frequency	f_{STM} SR	-	-	100	MHz	
ERAY frequency	f_{ERAY} SR	-	80	-	MHz	
BBB frequency	f_{BBB} SR	-	-	150	MHz	
VADC frequency	f_{ADC} SR	-	-	160	MHz	
ASCLIN Operating Frequency	$f_{ASCLINx}$ SR	-	-	200	MHz	
CAN frequency	f_{CAN} SR	-	-	80	MHz	
EBU operating frequency	f_{EBU} SR	-	-	160	MHz	
I2C frequency	f_{I2C} SR	-	-	100	MHz	
Operating MSC Frequency	f_{MSC} SR	-	-	200	MHz	
PLL1 output frequency from PER PLL	f_{PLL1} SR	20	-	320	MHz	
PLL2 output frequency from PER PLL	f_{PLL2} SR	20	-	200	MHz	
QSPI Frequency	f_{QSPI} SR	-	-	200	MHz	
ADAS clock frequency	f_{ADAS} CC	200	-	300	MHz	
MCANH frequency	f_{MCANH} CC	-	-	100	MHz	
GETH frequency	f_{GETH} CC	150	-	200	MHz	
Ambient Temperature	T_A SR	-40	-	125	°C	valid for all SAK products
		-40	-	150	°C	valid for all SAL products with package

Downloaded by IFXDMZlpar-zengzhe 12/02/2019 11:04:31

Table 3-3 Operating Conditions (cont'd)

Parameter	Symbol	Values			Unit	Note / Test Condition
		Min.	Typ.	Max.		
Junction Temperature	T_J SR	-40	-	150	°C	valid for all SAK products
		-40	-	170	°C	valid for all SAL products
Core Supply Voltage	V_{DD} SR	1.125 [1)]	1.25	1.375 [2)]	V	
ADC analog supply voltage	V_{DDM} SR	2.97	5.0	5.5 [3)]	V	
Digital external supply voltage for pads and EVR	V_{EXT} SR	4.5	5.0	5.5 [3)]	V	Nominal 5V Pad / Port Pin supply range. 5V pad parameters are valid.
		2.97	3.3	3.63	V	Nominal 3.3V Pad / Port Pin supply range with VDDP3 supplied externally and EVR33 inactive. 3.3V pad parameters are valid.
		3.6	-	4.5	V	Flash configured in cranking mode; Flash read operation with reduced performance. EVR33 active in low voltage mode. 3.3V pad parameters are valid.
		2.97	-	3.6	V	Incase EVR33 is active, Flash configured in sleep mode and execution switched to RAM. 3.3V pad parameters are valid.
Digital supply voltage for EBU	V_{EBU} CC	2.97	3.3	3.63	V	3.3V pad parameters are valid
		4.5	5	5.5	V	5V pad parameters are valid
Digital supply voltage for Flex port	V_{FLEX} SR	2.97	-	4.0	V	3.3V pad parameters are valid
		4.5	5.0	5.5 [3)]	V	5V pad parameters are valid
Digital supply voltage for Flash	V_{DDP3} SR	2.97	3.3	3.63 [4)]	V	
		2.6	-	3.63	V	Flash configured in cranking mode; Flash read operation with reduced performance.

Downloaded by IFXDMZ|par-zengzhe 12/02/2019 11:04:31

Table 3-3 Operating Conditions (cont'd)

Parameter	Symbol	Values			Unit	Note / Test Condition
		Min.	Typ.	Max.		
Digital ground voltage	V_{SS} SR	0	-	-	V	
Analog ground voltage for V_{DDM}	V_{SSM} CC	-0.1	0	0.1	V	
Digital external supply voltage for EVR and during Standby mode	V_{EVRSB} SR	2.97 [5)]	-	5.5	V	
Voltage to ensure defined pad states	V_{DDPPA} CC	1.3 [6)]	-	-	V	

1) For V_{DD} 1.08V ≤ V_{DD} < 1.125V operation is still possible but with relaxed parameters.
2) Voltage overshoot to 1.69V is permissible, provided the duration is less than 2h cumulated. Reduced ADC accuracy and leakage is increased.
3) Voltage overshoot to 6.5V is permissible, provided the duration is less than 2h cumulated. Reduced ADC accuracy and leakage is increased.
4) Voltage overshoot to 4.29V is permissible, provided the duration is less than 2h cumulated. Reduced ADC accuracy and leakage is increased.
5) V_{EVRSB} supply voltage can drop down upto 2.6V during Standby mode. It is required to have a capictor of 100nF on V_{EVRSB} supply pin.
6) HWCFG[6] pin is latched and pull-up or tristate is activated at Port pins when VEXT has reached this level.

Limitation of Supply Voltage over Time

The maximum operation voltage for $V_{EXT/FLEX/DDM}$ supply rails is limited over the complete lifetime.

The following voltage profile is an example. Application specific voltage profiles need to be aligned and approved by Infineon Technologies for the fulfillment of quality and reliability targets.

Table 3-4 Example Voltage Profile

$V_{EXT/FLEX/DDM}$=	Duration [h]
5.4 V < $V_{EXT/FLEX/DDM}$ ≤ 5.5 V	≤ 5% of lifetime
5.15 V < $V_{EXT/FLEX/DDM}$ ≤ 5.4 V	≤ 15% of lifetime
4.85 V < $V_{EXT/FLEX/DDM}$ ≤ 5.15 V	≤ 60% of lifetime
4.6 V < $V_{EXT/FLEX/DDM}$ ≤ 4.85 V	≤ 15% of lifetime
4.5 V < $V_{EXT/FLEX/DDM}$ ≤ 4.6 V	≤ 5% of lifetime

The maximum operation voltage for V_{DD} supply rails is limited over the complete lifetime.

The following voltage profile is an example. Application specific voltage profiles need to be aligned and approved by Infineon Technologies for the fulfillment of quality and reliability targets.

Table 3-5 Example Voltage Profile

V_{DD}=	Duration [h]
1.325 V < V_{DD} ≤ 1.375 V	≤ 5% of lifetime
1.275 V < V_{DD} ≤ 1.325 V	≤ 15% of lifetime
1.225 V < V_{DD} ≤ 1.275 V	≤ 60% of lifetime
1.175 V < V_{DD} ≤ 1.225 V	≤ 15% of lifetime
1.125 V < V_{DD} ≤ 1.175V	≤ 5% of lifetime

Downloaded by IFXDMZ|par-zengzhe 12/02/2019 11:04:31

3.5 5 V / 3.3 V switchable Pads

Pad classes slow GPIO and fast GPIO support both Automotive Level (AL) or TTL level (TTL) operation. Parameters are defined for AL operation and degrade in TTL operation.

Table 3-6 $\overline{\text{PORST}}$ Pad

Parameter	Symbol	Values			Unit	Note / Test Condition
		Min.	Typ.	Max.		
$\overline{\text{PORST}}$ pad Output current	I_{PORST} CC	13	-	-	mA	V_{EXT} = 2.97V; V_{PORST} = 0.9V
Spike filter always blocked pulse duration	t_{SF1} CC	-	-	80	ns	
Spike filter pass-through blocked pulse duration	t_{SF2} CC	260	-	-	ns	without additional PORST Digtial Filter active (PORSTDF = 0).
Input hysteresis [1]	HYS CC	0.055 * V_{EXT}	-	-	V	non of the neighbor pads are used as output;TTL (degraded, used for CIF)
Pull-down current [2]	I_{PDL} CC	-	-	|130|	µA	V_{IH}; TTL (degraded, used for CIF)
		|15|	-	-	µA	V_{IL}; TTL (degraded, used for CIF)
Input leakage current	I_{OZ} CC	-450	-	450	nA	TJ≤150°C ; (0.1 * V_{EXT}) < V_{IN} < (0.9 * V_{EXT})
		-500	-	500	nA	TJ≤150°C ;else
		-900	-	900	nA	TJ≤170°C ; (0.1 * V_{EXT}) < V_{IN} < (0.9 * V_{EXT})
		-950	-	950	nA	TJ≤170°C ; else
Input high voltage level	V_{IH} SR	1.4	-	-	V	TTL (degraded, used for CIF); V_{EXT} = 2.97V
		2.0	-	-	V	TTL; V_{EXT} = 4.5V
Input low voltage level	V_{IL} SR	-	-	0.5	V	TTL (degraded, used for CIF); V_{EXT} = 2.97V
		-	-	0.8	V	TTL; V_{EXT} = 4.5V
Pin capacitance	C_{IO} CC	-	2	3	pF	in addition 2.5pF from package to be added

1) Hysteresis is implemented to avoid metastable states and switching due to internal ground bounce. It can't be guaranteed that it suppresses switching due to external system noise.

2) Values for Pull-down resistor is defined via parameter R_{MDD} in table VADC 5V.

Downloaded by IFXDMZ|par-zengzhe 12/02/2019 11:04:31

Table 3-7 Fast 5V GPIO

Parameter	Symbol	Values			Unit	Note / Test Condition
		Min.	Typ.	Max.		
On-Resistance of pad output	R_{DSON} CC	125	225	320	Ohm	medium driver; $I_{OH / OL}$ = 2mA
		31	55	80	Ohm	strong driver; $I_{OH / OL}$ = 8mA
Rise / Fall time [1) 2)]	t_{RF} CC	1.6	-	3.2	ns	C_L = 25pF; driver = strong sharp edge; from 0.2 * $V_{EXT/FLEX/EVRSB}$ to 0.8 * $V_{EXT/FLEX/EVRSB}$
		4+0.55*C_L	4+0.75*C_L	12+1.0*C_L	ns	driver = medium; C_L≤200pF
		1.0+0.18*C_L	2.5+0.27*C_L	5.0+0.35*C_L	ns	driver = strong edge = medium; C_L≤200pF
		0.5+0.08*C_L	0.5+0.11*C_L	1.0+0.17*C_L	ns	driver = strong edge = sharp ; C_L≤200pF
Asymmetry of sending	t_{TX_ASYM} CC	-1	-	1	ns	C_L; valid for all data rates excluding clock tolerance
Input frequency	f_{IN} CC	-	-	160	MHz	
Input hysteresis [3)]	HYS CC	0.09 * $V_{EXT/FLEX/EVRSB}$	-	-	V	non of the neighbor pads are used as output; AL
		0.075 * $V_{EXT/FLEX/EVRSB}$	-	-	V	non of the neighbor pads are used as output; TTL
		75	-	-	mV	two of the neighbor pads are used as output with driver=strong and edge=sharp; AL
Pull-up current [4)]	I_{PUH} CC	|30|	-	-	µA	V_{IH}; AL or TTL
		-	-	|130|	µA	V_{IL}; AL or TTL
Pull-down current [5)]	I_{PDL} CC	-	-	|130|	µA	V_{IH}; AL or TTL
		|30|	-	-	µA	V_{IL}; AL
		|28|	-	-	µA	V_{IL}; TTL

Downloaded by IFXDMZ|par-zengzhe 12/02/2019 11:04:31

Table 3-7 Fast 5V GPIO (cont'd)

Parameter	Symbol	Values			Unit	Note / Test Condition
		Min.	Typ.	Max.		
Input leakage current	I_{OZ} CC	-1100	-	1100	nA	$T_J \leq 150°C$; (0.1 * $V_{EXT/FLEX/EVRSB}$) < V_{IN} < (0.9 * $V_{EXT/FLEX/EVRSB}$)
		-2500	-	2500	nA	$T_J \leq 150°C$; (0.1 * $V_{EXT/FLEX}$) < V_{IN} < (0.9 * $V_{EXT/FLEX}$) ; LVDS_TX / Fast pad type
		-6000	-	6000	nA	$T_J \leq 150°C$; LVDS_RX / Fast pad type ; else
		-3200	-	3200	nA	$T_J \leq 150°C$; LVDS_TX / Fast pad type ; else
		-1500	-	1500	nA	$T_J \leq 150°C$; else
		-2000	-	2000	nA	$T_J \leq 170°C$; (0.1 * $V_{EXT/FLEX/EVRSB}$) < V_{IN} < (0.9 * $V_{EXT/FLEX/EVRSB}$)
		-4000	-	4000	nA	$T_J \leq 170°C$; (0.1 * $V_{EXT/FLEX}$) < V_{IN} < (0.9 * $V_{EXT/FLEX}$) ; LVDS_TX / Fast pad type
		-13500	-	13500	nA	$T_J \leq 170°C$; LVDS_RX / Fast pad type ; else
		-5100	-	5100	nA	$T_J \leq 170°C$; LVDS_TX / Fast pad type ; else
		-2500	-	2500	nA	$T_J \leq 170°C$; else
Input high voltage level	V_{IH} SR	0.7 * $V_{EXT/FLEX/EVRSB}$	-	-	V	AL
		2.0	-	-	V	TTL
Input low voltage level	V_{IL} SR	-	-	0.44 * $V_{EXT/FLEX/EVRSB}$	V	AL
		-	-	0.8	V	TTL
Input low threshold variation	V_{ILD} SR	-50	-	50	mV	max. variation of 1ms; $V_{EXT/FLEX/EVRSB}$ = constant; AL
Pin capacitance	C_{IO} CC	-	2	3	pF	in addition 2.5pF from package to be added
Pad set-up time to get an software update of the configuration active	t_{SET} CC	-	-	100	ns	

1) In the formulas the value of C_L needs to be entered in pF to obtain results in ns.
2) Rise / fall times are defined 10% - 90% of pad supply voltage.

Downloaded by IFXDMZ|par-zengzhe 12/02/2019 11:04:31

3) Hysteresis is implemented to avoid metastable states and switching due to internal ground bounce. It can't be guaranteed that it suppresses switching due to external system noise.
4) Values for Pull-up resistor is defined via parameter R_{MDU} in table VADC 5V.
5) Values for Pull-down resistor is defined via parameter R_{MDD} in table VADC 5V.

Table 3-8 Fast 3.3V GPIO

Parameter	Symbol	Values			Unit	Note / Test Condition
		Min.	Typ.	Max.		
On-Resistance of pad output	R_{DSON} CC	125	225	320	Ohm	medium driver; $I_{OH / OL}$ = 2mA
		31	55	80	Ohm	strong driver; $I_{OH / OL}$ = 8mA
Rise / Fall time [1) 2)]	t_{RF} CC	1.6	-	4.5	ns	C_L = 25pF; driver = strong sharp edge; from 0.2 * $V_{EXT/FLEX/EVRSB}$ to 0.8 * $V_{EXT/FLEX/EVRSB}$
		-	-	5	ns	C_L = 25pF; driver = strong sharp edge; from 0.8V to 2.0V (RMII)
		2+0.57*C_L	5.5+0.75*C_L	10+1.25*C_L	ns	driver = medium; C_L≤200pF
		1.5+0.18*C_L	1.5+0.28*C_L	8+0.4*C_L	ns	driver = strong edge = medium; C_L≤200pF
		0.75+0.08*C_L	0.75+0.11*C_L	2.5+0.21*C_L	ns	driver = strong edge = sharp ; C_L≤200pF
Asymmetry of sending	t_{TX_ASYM} CC	-1	-	1	ns	C_L; valid for all data rates excluding clock tolerance
Input frequency	f_{IN} CC	-	-	160	MHz	
Input hysteresis [3)]	HYS CC	0.055 * $V_{EXT/FLEX/EVRSB}$	-	-	V	non of the neighbor pads are used as output; AL
		0.09 * $V_{EXT/FLEX/EVRSB}$	-	-	V	non of the neighbor pads are used as output; TTL
		0.055 * $V_{EXT/FLEX/EVRSB}$	-	-	V	non of the neighbor pads are used as output;TTL (degraded, used for CIF)
		125	-	-	mV	two of the neighbor pads are used as output with driver=strong and edge=sharp; AL

Downloaded by IFXDMZlpar-zengzhe 12/02/2019 11:04:31

Table 3-8 Fast 3.3V GPIO (cont'd)

Parameter	Symbol	Values			Unit	Note / Test Condition
		Min.	Typ.	Max.		
Pull-up current [4)]	I_{PUH} CC	|17|	-	-	µA	V_{IH}; AL and TTL (degraded, used for CIF)
		|11|	-	-	µA	V_{IH}; TTL
		-	-	|80|	µA	V_{IL}; AL and TTL and TTL (degraded, used for CIF)
Pull-down current [5)]	I_{PDL} CC	-	-	|105|	µA	V_{IH}; AL and TTL (degraded, used for CIF)
		-	-	|115|	µA	V_{IH}; TTL
		|19|	-	-	µA	V_{IL}; AL and TTL
		|15|	-	-	µA	V_{IL}; TTL (degraded, used for CIF)
Input leakage current	I_{OZ} CC	-1100	-	1100	nA	$T_J \leq 150°C$; (0.1 * $V_{EXT/FLEX/EVRSB}$) < V_{IN} < (0.9 * $V_{EXT/FLEX/EVRSB}$)
		-2500	-	2500	nA	$T_J \leq 150°C$; (0.1 * $V_{EXT/FLEX}$) < V_{IN} < (0.9 * $V_{EXT/FLEX}$) ; LVDS_TX / Fast pad type
		-6000	-	6000	nA	$T_J \leq 150°C$; LVDS_RX / Fast pad type ; else
		-3200	-	3200	nA	$T_J \leq 150°C$; LVDS_TX / Fast pad type ; else
		-1500	-	1500	nA	$T_J \leq 150°C$; else
		-2000	-	2000	nA	$T_J \leq 170°C$; (0.1 * $V_{EXT/FLEX/EVRSB}$) < V_{IN} < (0.9 * $V_{EXT/FLEX/EVRSB}$)
		-4000	-	4000	nA	$T_J \leq 170°C$; (0.1 * $V_{EXT/FLEX}$) < V_{IN} < (0.9 * $V_{EXT/FLEX}$) ; LVDS_TX / Fast pad type
		-13500	-	13500	nA	$T_J \leq 170°C$; LVDS_RX / Fast pad type ; else
		-5100	-	5100	nA	$T_J \leq 170°C$; LVDS_TX / Fast pad type ; else
		-2500	-	2500	nA	$T_J \leq 170°C$; else

Downloaded by IFXDMZ|par-zengzhe 12/02/2019 11:04:31

Table 3-8 Fast 3.3V GPIO (cont'd)

Parameter	Symbol	Values			Unit	Note / Test Condition
		Min.	Typ.	Max.		
Input high voltage level	V_{IH} SR	0.7 * $V_{EXT/FLEX/EVRSB}$	-	-	V	AL
		2.0	-	-	V	TTL
		1.4	-	-	V	TTL (degraded, used for CIF)
Input low voltage level	V_{IL} SR	-	-	0.42 * $V_{EXT/FLEX/EVRSB}$	V	AL
		-	-	0.8	V	TTL
		-	-	0.5	V	TTL (degraded, used for CIF)
Input low/high voltage level	V_{ILH} SR	1.0	-	1.9	V	RGMII; no hysteresis available
Input low threshold variation	V_{ILD} SR	-33	-	33	mV	max. variation of 1ms; $V_{EXT/FLEX/EVRSB}$ = constant; AL
Pin capacitance	C_{IO} CC	-	2	3	pF	in addition 2.5pF from package to be added
Pad set-up time to get an software update of the configuration active	t_{SET} CC	-	-	100	ns	

1) In the formulas the value of C_L needs to be entered in pF to obtain results in ns.
2) Rise / fall times are defined 10% - 90% of pad supply voltage.
3) Hysteresis is implemented to avoid metastable states and switching due to internal ground bounce. It can't be guaranteed that it suppresses switching due to external system noise.
4) Values for Pull-up resistor is defined via parameter R_{MDU} in table VADC 5V.
5) Values for Pull-down resistor is defined via parameter R_{MDD} in table VADC 5V.

Table 3-9 Slow 5V GPIO

Parameter	Symbol	Values			Unit	Note / Test Condition
		Min.	Typ.	Max.		
On-Resistance of pad output	R_{DSON} CC	125	225	320	Ohm	medium driver; $I_{OH/OL}$ = 2mA
Rise / Fall time [1) 2)]	t_{RF} CC	4+0.55*C_L	4+0.75*C_L	12+1*C_L	ns	driver = medium edge = medium ; C_L≤200pF
		1.5+0.25*C_L	2.5+0.40*C_L	7+0.55*C_L	ns	driver = medium edge = sharp ; C_L≤200pF
Asymmetry of sending	t_{TX_ASYM} CC	-1	-	1	ns	C_L; valid for all data rates excluding clock tolerance
Input frequency	f_{IN} CC	-	-	160	MHz	

Downloaded by IFXDMZ|par-zengzhe 12/02/2019 11:04:31

Table 3-9 Slow 5V GPIO (cont'd)

Parameter	Symbol	Values			Unit	Note / Test Condition
		Min.	Typ.	Max.		
Input hysteresis [3]	HYS CC	0.09 * $V_{EXT/FLEX/EVRSB}$	-	-	V	non of the neighbor pads are used as output; AL
		0.075 * $V_{EXT/FLEX/EVRSB}$	-	-	V	non of the neighbor pads are used as output; TTL
		75	-	-	mV	two of the neighbor pads are used as output with driver=strong and edge=sharp; AL
Pull-up current [4]	I_{PUH} CC	|30|	-	-	µA	V_{IH};AL or TTL; exept VGATE1P; except VGATE1N and T_J > 150°C
		-	-	|130|	µA	V_{IL}; AL or TTL; exept VGATE1P; except VGATE1N and T_J > 150°C
Pull-down current [5]	I_{PDL} CC	-	-	|130|	µA	V_{IH}; AL or TTL
		|30|	-	-	µA	V_{IL}; AL
		|28|	-	-	µA	V_{IL}; TTL
Input leakage current	I_{OZ} CC	-300	-	300	nA	T_J ≤ 150°C; (0.1 * $V_{EXT/FLEX/EVRSB}$) < V_{IN} < (0.9 * $V_{EXT/FLEX/EVRSB}$); no analog input
		-400	-	400	nA	T_J ≤ 150°C; no analog input; else
		-600	-	600	nA	T_J ≤ 170°C; (0.1 * $V_{EXT/FLEX/EVRSB}$) < V_{IN} < (0.9 * $V_{EXT/FLEX/EVRSB}$); no analog input
		-750	-	750	nA	T_J ≤ 170°C; no analog input; else
		-18000	-	18000	nA	P32.0 and P32.1;T_J≤150°C
		-38000	-	38000	nA	P32.0 and P32.1;T_J≤170°C
Input high voltage level	V_{IH} SR	0.7 * $V_{EXT/FLEX/EVRSB}$	-	-	V	AL
		2.0	-	-	V	TTL

Downloaded by IFXDMZ|par-zengzhe 12/02/2019 11:04:31

Table 3-9 Slow 5V GPIO (cont'd)

Parameter	Symbol	Values			Unit	Note / Test Condition
		Min.	Typ.	Max.		
Input low voltage level	V_{IL} SR	-	-	0.44 * $V_{EXT/FLEX/EVRSB}$	V	AL
		-	-	0.8	V	TTL
Input low threshold variation	V_{ILD} SR	-50	-	50	mV	max. variation of 1ms; $V_{EXT/FLEX/EVRSB}$ = constant; AL
Pin capacitance	C_{IO} CC	-	2	3	pF	in addition 2.5pF from package to be added
Pad set-up time to get an software update of the configuration active	t_{SET} CC	-	-	100	ns	

1) In the formulas the value of C_L needs to be entered in pF to obtain results in ns.
2) Rise / fall times are defined 10% - 90% of pad supply voltage.
3) Hysteresis is implemented to avoid metastable states and switching due to internal ground bounce. It can't be guaranteed that it suppresses switching due to external system noise.
4) Values for Pull-up resistor is defined via parameter R_{MDU} in table VADC 5V.
5) Values for Pull-down resistor is defined via parameter R_{MDD} in table VADC 5V.

Table 3-10 Slow 3.3V GPIO

Parameter	Symbol	Values			Unit	Note / Test Condition
		Min.	Typ.	Max.		
On-Resistance of pad output	R_{DSON} CC	125	225	320	Ohm	medium driver; $I_{OH/OL}$ = 2mA
Rise / Fall time [1) 2)]	t_{RF} CC	2+0.57*C_L	5.5+0.75*C_L	10+1.25*C_L	ns	driver = medium edge = medium ; C_L≤200pF
		2+0.30*C_L	3.5+0.50*C_L	5+0.70*C_L	ns	driver = medium edge = sharp ; C_L≤200pF
Asymmetry of sending	t_{TX_ASYM} CC	-1	-	1	ns	C_L; valid for all data rates excluding clock tolerance
Input frequency	f_{IN} CC	-	-	160	MHz	

Downloaded by IFXDMZlpar-zengzhe 12/02/2019 11:04:31

Table 3-10 Slow 3.3V GPIO (cont'd)

Parameter	Symbol	Values			Unit	Note / Test Condition
		Min.	Typ.	Max.		
Input hysteresis [3]	HYS CC	0.055 * $V_{EXT/FLEX/EVRSB}$	-	-	V	non of the neighbor pads are used as output; AL
		0.09 * $V_{EXT/FLEX/EVRSB}$	-	-	V	non of the neighbor pads are used as output; TTL
		0.055 * $V_{EXT/FLEX/EVRSB}$	-	-	V	non of the neighbor pads are used as output;TTL (degraded, used for CIF)
		125	-	-	mV	two of the neighbor pads are used as output with driver=strong and edge=sharp; AL
Pull-up current [4]	I_{PUH} CC	|17|	-	-	µA	V_{IH}; AL and TTL (degraded, used for CIF); exept VGATE1P; except VGATE1N and T_J > 150°C
		|11|	-	-	µA	V_{IH}; TTL; exept VGATE1P; except VGATE1N and T_J > 150°C
		-	-	|80|	µA	V_{IL}; AL and TTL and TTL (degraded, used for CIF); exept VGATE1P; except VGATE1N and T_J > 150°C
Pull-down current [5]	I_{PDL} CC	-	-	|105|	µA	V_{IH}; AL and TTL (degraded, used for CIF)
		-	-	|115|	µA	V_{IH}; TTL
		|19|	-	-	µA	V_{IL}; AL and TTL
		|15|	-	-	µA	V_{IL}; TTL (degraded, used for CIF)

Downloaded by IFXDMZ|par-zengzhe 12/02/2019 11:04:31

Table 3-10 Slow 3.3V GPIO (cont'd)

Parameter	Symbol	Values			Unit	Note / Test Condition
		Min.	Typ.	Max.		
Input leakage current	I_{OZ} CC	-300	-	300	nA	T_J ≤ 150°C; (0.1 * $V_{EXT/FLEX/EVRSB}$) < V_{IN} < (0.9 * $V_{EXT/FLEX/EVRSB}$); no analog input
		-400	-	400	nA	T_J ≤ 150°C; no analog input; else
		-600	-	600	nA	T_J ≤ 170°C; (0.1 * $V_{EXT/FLEX/EVRSB}$) < V_{IN} < (0.9 * $V_{EXT/FLEX/EVRSB}$); no analog input
		-750	-	750	nA	T_J ≤ 170°C; no analog input; else
		-18000	-	18000	nA	P32.0 and P32.1;T_J≤150°C
		-38000	-	38000	nA	P32.0 and P32.1;T_J≤170°C
Input high voltage level	V_{IH} SR	0.7 * $V_{EXT/FLEX/EVRSB}$	-	-	V	AL
		2.0	-	-	V	TTL
		1.4	-	-	V	TTL (degraded, used for CIF)
Input low voltage level	V_{IL} SR	-	-	0.42 * $V_{EXT/FLEX/EVRSB}$	V	AL
		-	-	0.8	V	TTL
		-	-	0.5	V	TTL (degraded, used for CIF)
Input low/high voltage level	V_{ILH} SR	1.0	-	1.9	V	RGMII; no hysteresis available
Input low threshold variation	V_{ILD} SR	-33	-	33	mV	max. variation of 1ms; $V_{EXT/FLEX/EVRSB}$ = constant; AL
Pin capacitance	C_{IO} CC	-	2	3	pF	in addition 2.5pF from package to be added
Pad set-up time to get an software update of the configuration active	t_{SET} CC	-	-	100	ns	

1) In the formulas the value of C_L needs to be entered in pF to obtain results in ns.
2) Rise / fall times are defined 10% - 90% of pad supply voltage.
3) Hysteresis is implemented to avoid metastable states and switching due to internal ground bounce. It can't be guaranteed that it suppresses switching due to external system noise.
4) Values for Pull-up resistor is defined via parameter R_{MDU} in table VADC 5V.

Downloaded by IFXDMZ|par-zengzhe 12/02/2019 11:04:31

5) Values for Pull-down resistor is defined via parameter R_{MDD} in table VADC 5V.

Table 3-11 RFast 5V GPIO

Parameter	Symbol	Values			Unit	Note / Test Condition
		Min.	Typ.	Max.		
On-Resistance of pad output	R_{DSON} CC	125	225	320	Ohm	medium driver; $I_{OH / OL}$ = 2mA
		31	55	80	Ohm	strong driver; $I_{OH / OL}$ = 8mA
Rise / Fall time [1) 2)]	t_{RF} CC	1.6	-	3.2	ns	C_L = 25pF; driver = strong sharp edge; from 0.2 * V_{FLEX} to 0.8 * V_{FLEX}
		4+0.55*C_L	4+0.75*C_L	12+1.0*C_L	ns	driver = medium; C_L≤200pF
		1.0+0.18* C_L	2.5+0.27* C_L	5.0+0.35* C_L	ns	driver = strong edge = medium; C_L≤200pF
		0.5+0.08* C_L	0.5+0.11* C_L	1.0+0.17* C_L	ns	driver = strong edge = sharp ; C_L≤200pF
Asymmetry of sending	t_{TX_ASYM} CC	-0.5	-	0.5	ns	C_L; valid for all data rates excluding clock tolerance
Input frequency	f_{IN} CC	-	-	160	MHz	
Input hysteresis [3)]	HYS CC	0.09 * V_{FLEX}	-	-	V	non of the neighbor pads are used as output; AL
		0.075 * V_{FLEX}	-	-	V	non of the neighbor pads are used as output; TTL
		75	-	-	mV	two of the neighbor pads are used as output with driver=strong and edge=sharp; AL
Pull-up current [4)]	I_{PUH} CC	|30|	-	-	µA	V_{IH}; AL or TTL
		-	-	|130|	µA	V_{IL}; AL or TTL
Pull-down current [5)]	I_{PDL} CC	-	-	|130|	µA	V_{IH}; AL or TTL
		|30|	-	-	µA	V_{IL}; AL
		|28|	-	-	µA	V_{IL}; TTL

Downloaded by IFXDMZlpar-zengzhe 12/02/2019 11:04:31

Table 3-11 RFast 5V GPIO (cont'd)

Parameter	Symbol	Values			Unit	Note / Test Condition
		Min.	Typ.	Max.		
Input leakage current	I_{OZ} CC	-1700	-	1700	nA	T_J ≤ 150°C ; (0.1 * V_{FLEX}) < V_{IN} < (0.9 * V_{FLEX})
		-2100	-	2100	nA	T_J ≤ 150°C ; else
		-3000	-	3000	nA	T_J ≤ 170°C ; (0.1 * V_{FLEX}) < V_{IN} < (0.9 * V_{FLEX})
		-4000	-	4000	nA	T_J ≤ 170°C ; else
Input high voltage level	V_{IH} SR	0.7 * V_{FLEX}	-	-	V	AL
		2.0	-	-	V	TTL
Input low voltage level	V_{IL} SR	-	-	0.44 * V_{FLEX}	V	AL
		-	-	0.8	V	TTL
Input low threshold variation	V_{ILD} SR	-50	-	50	mV	max. variation of 1ms; V_{FLEX} = constant; AL
Pin capacitance	C_{IO} CC	-	2	3.5	pF	in addition 2.5pF from package to be added
Pad set-up time to get an software update of the configuration active	t_{SET} CC	-	-	100	ns	

1) In the formulas the value of C_L needs to be entered in pF to obtain results in ns.
2) Rise / fall times are defined 10% - 90% of pad supply voltage.
3) Hysteresis is implemented to avoid metastable states and switching due to internal ground bounce. It can't be guaranteed that it suppresses switching due to external system noise.
4) Values for Pull-up resistor is defined via parameter R_{MDU} in table VADC 5V.
5) Values for Pull-down resistor is defined via parameter R_{MDD} in table VADC 5V.

Table 3-12 RFast 3.3V pad

Parameter	Symbol	Values			Unit	Note / Test Condition
		Min.	Typ.	Max.		
On-Resistance of pad output	R_{DSON} CC	8	20	30	Ohm	Driver = RGMII; $I_{OH/OL}$ = 8mA
		125	225	320	Ohm	medium driver; $I_{OH/OL}$ = 2mA
		31	55	80	Ohm	strong driver; $I_{OH/OL}$ = 8mA
Input Duty Cycle	f_D SR	47.5	50	52.5		
Input Signal delay	f_{IND} CC	-	-	4	ns	TTL and TTL (degraded, used for CIF)

Downloaded by IFXDMZ|par-zengzhe 12/02/2019 11:04:31

Table 3-12 RFast 3.3V pad (cont'd)

Parameter	Symbol	Values			Unit	Note / Test Condition
		Min.	Typ.	Max.		
Rise / Fall time [1) 2)]	t_{RF} CC	1.6	-	4.5	ns	C_L = 25pF; driver = strong sharp edge; from 0.2 * V_{FLEX} to 0.8 * V_{FLEX}
		-	-	5	ns	C_L = 25pF; driver = strong sharp edge; from 0.8V to 2.0V (RMII)
		-	-	1	ns	Driver = RGMII; from 20%V to 80%V; C_L=15pF
		2+0.57*C_L	5.5+0.75*C_L	10+1.25*C_L	ns	driver = medium; C_L≤200pF
		1.5+0.18*C_L	1.5+0.28*C_L	8+0.4*C_L	ns	driver = strong edge = medium; C_L≤200pF
		0.75+0.08*C_L	0.75+0.11*C_L	2.5+0.21*C_L	ns	driver = strong edge = sharp ; C_L≤200pF
Asymmetry of sending	t_{TX_ASYM} CC	-0.4	-	0.4	ns	C_L; valid for all data rates excluding clock tolerance
Input frequency	f_{IN} CC	-	-	160	MHz	
Input hysteresis [3)]	HYS CC	0.055 * V_{FLEX}	-	-	V	non of the neighbor pads are used as output; AL
		0.09 * V_{FLEX}	-	-	V	non of the neighbor pads are used as output; TTL
		0.055 * V_{FLEX}	-	-	V	non of the neighbor pads are used as output;TTL (degraded, used for CIF)
		125	-	-	mV	two of the neighbor pads are used as output with driver=strong and edge=sharp; AL
Pull-up current [4)]	I_{PUH} CC	|17|	-	-	µA	V_{IH}; AL and TTL (degraded, used for CIF)
		|11|	-	-	µA	V_{IH}; TTL
		-	-	|80|	µA	V_{IL}; AL and TTL and TTL (degraded, used for CIF)

Downloaded by IFXDMZ|par-zengzhe 12/02/2019 11:04:31

Table 3-12 RFast 3.3V pad (cont'd)

Parameter	Symbol	Values			Unit	Note / Test Condition
		Min.	Typ.	Max.		
Pull-down current [5]	I_{PDL} CC	-	-	|105|	µA	V_{IH}; AL and TTL (degraded, used for CIF)
		-	-	|115|	µA	V_{IH}; TTL
		|19|	-	-	µA	V_{IL}; AL and TTL
		|15|	-	-	µA	V_{IL}; TTL (degraded, used for CIF)
Input leakage current	I_{OZ} CC	-1700	-	1700	nA	$T_J \leq 150°C$; (0.1 * V_{FLEX}) < V_{IN} < (0.9 * V_{FLEX})
		-2100	-	2100	nA	$T_J \leq 150°C$; else
		-3000	-	3000	nA	$T_J \leq 170°C$; (0.1 * V_{FLEX}) < V_{IN} < (0.9 * V_{FLEX})
		-4000	-	4000	nA	$T_J \leq 170°C$; else
Input high voltage level	V_{IH} SR	0.7 * V_{FLEX}	-	-	V	AL
		2.0	-	-	V	TTL
		1.4	-	-	V	TTL (degraded, used for CIF)
Input low voltage level	V_{IL} SR	-	-	0.42 * V_{FLEX}	V	AL
		-	-	0.8	V	TTL
		-	-	0.5	V	TTL (degraded, used for CIF)
Input low threshold variation	V_{ILD} SR	-33	-	33	mV	max. variation of 1ms; V_{FLEX} = constant; AL
Pin capacitance	C_{IO} CC	-	2	3.5	pF	in addition 2.5pF from package to be added
Pad set-up time to get an software update of the configuration active	t_{SET} CC	-	-	100	ns	

1) In the formulas the value of C_L needs to be entered in pF to obtain results in ns.
2) Rise / fall times are defined 10% - 90% of pad supply voltage.
3) Hysteresis is implemented to avoid metastable states and switching due to internal ground bounce. It can't be guaranteed that it suppresses switching due to external system noise.
4) Values for Pull-up resistor is defined via parameter R_{MDU} in table VADC 5V.
5) Values for Pull-down resistor is defined via parameter R_{MDD} in table VADC 5V.

Downloaded by IFXDMZ|par-zengzhe 12/02/2019 11:04:31

Table 3-13 Class S 5V

Parameter	Symbol	Values			Unit	Note / Test Condition
		Min.	Typ.	Max.		
Input frequency	f_{IN} CC	-	-	160	MHz	
Input hysteresis [1]	HYS CC	0.09 * V_{DDM}	-	-	V	non of the neighbor pads are used as output; AL
		0.075 * V_{DDM}	-	-	V	non of the neighbor pads are used as output; TTL
		75	-	-	mV	two of the neighbor pads are used as output with driver=strong and edge=sharp; AL
Pull-up current [2]	I_{PUH} CC	|30|	-	-	µA	V_{IH}; AL or TTL
		-	-	|130|	µA	V_{IL}; AL or TTL
Pull-down current [3]	I_{PDL} CC	-	-	|130|	µA	V_{IH}; AL or TTL
		|30|	-	-	µA	V_{IL}; AL
		|28|	-	-	µA	V_{IL}; TTL
Input leakage current	I_{OZ} CC	-150	-	150	nA	T_J ≤ 150°C; else
		-300	-	300	nA	T_J ≤ 150°C; PDD option available, or AltRef option available and EDSADC channel connected, or two EDSADC channels connected
		-300	-	300	nA	T_J ≤ 170°C; else
		-600	-	600	nA	T_J ≤ 170°C; PDD option available, or AltRef option available and EDSADC channel connected, or two EDSADC channels connected
Input high voltage level	V_{IH} SR	0.7 * V_{DDM}	-	-	V	AL
		2.0	-	-	V	TTL
Input low voltage level	V_{IL} SR	-	-	0.44 * V_{DDM}	V	AL
		-	-	0.8	V	TTL
Input low threshold variation	V_{ILD} SR	-50	-	50	mV	max. variation of 1ms; V_{DDM} = constant; AL

Downloaded by IFXDMZ|par-zengzhe 12/02/2019 11:04:31

Table 3-13 Class S 5V (cont'd)

Parameter	Symbol	Values			Unit	Note / Test Condition
		Min.	Typ.	Max.		
Pin capacitance	C_{IO} CC	-	2	3	pF	in addition 2.5pF from package to be added
Pad set-up time to get an software update of the configuration active	t_{SET} CC	-	-	100	ns	

1) Hysteresis is implemented to avoid metastable states and switching due to internal ground bounce. It can't be guaranteed that it suppresses switching due to external system noise.
2) Values for Pull-up resistor is defined via parameter R_{MDU} in table VADC 5V.
3) Values for Pull-down resistor is defined via parameter R_{MDD} in table VADC 5V.

Table 3-14 Class S 3.3V

Parameter	Symbol	Values			Unit	Note / Test Condition
		Min.	Typ.	Max.		
Input frequency	f_{IN} CC	-	-	160	MHz	
Input hysteresis [1]	HYS CC	0.055 * V_{DDM}	-	-	V	non of the neighbor pads are used as output; AL
		0.09 * V_{DDM}	-	-	V	non of the neighbor pads are used as output; TTL
		0.065 * V_{DDM}	-	-	V	non of the neighbor pads are used as output; TTL (degraded used for CIF)
		125	-	-	mV	two of the neighbor pads are used as output with driver=strong and edge=sharp; AL
Pull-up current [2]	I_{PUH} CC	|17|	-	-	µA	V_{IH}; AL and TTL (degraded, used for CIF)
		|11|	-	-	µA	V_{IH}; TTL
		-	-	|80|	µA	V_{IL}
Pull-down current [3]	I_{PDL} CC	-	-	|105|	µA	V_{IH}; AL and TTL (degraded, used for CIF)
		-	-	|115|	µA	V_{IH}; TTL
		|19|	-	-	µA	V_{IL}; AL and TTL
		|15|	-	-	µA	V_{IL}; TTL (degraded, used for CIF)

Downloaded by IFXDMZ|par-zengzhe 12/02/2019 11:04:31

Table 3-14 Class S 3.3V (cont'd)

Parameter	Symbol	Values			Unit	Note / Test Condition
		Min.	Typ.	Max.		
Input leakage current	I_{OZ} CC	-150	-	150	nA	T_J ≤ 150°C; else
		-300	-	300	nA	T_J ≤ 150°C; PDD option available, or AltRef option available and EDSADC channel connected
		-300	-	300	nA	T_J ≤ 170°C; else
		-600	-	600	nA	T_J ≤ 170°C; PDD option available
Input high voltage level	V_{IH} SR	0.7 * V_{DDM}	-	-	V	AL
		2.0	-	-	V	TTL
		1.4	-	-	V	TTL (degraded, used for CIF)
Input low voltage level	V_{IL} SR	-	-	0.42 * V_{DDM}	V	AL
		-	-	0.8	V	TTL
		-	-	0.5	V	TTL (degraded, used for CIF)
Input low threshold variation	V_{ILD} SR	-33	-	33	mV	max. variation of 1ms; V_{DDM} = constant; AL
Pin capacitance	C_{IO} CC	-	2	3	pF	in addition 2.5pF from package to be added
Pad set-up time to get an software update of the configuration active	t_{SET} CC	-	-	100	ns	

1) Hysteresis is implemented to avoid metastable states and switching due to internal ground bounce. It can't be guaranteed that it suppresses switching due to external system noise.
2) Values for Pull-up resistor is defined via parameter R_{MDU} in table VADC 5V.
3) Values for Pull-down resistor is defined via parameter R_{MDD} in table VADC 5V.

Downloaded by IFXDMZlpar-zengzhe 12/02/2019 11:04:31

Table 3-15 Class D

Parameter	Symbol	Values			Unit	Note / Test Condition
		Min.	Typ.	Max.		
Input leakage current	I_{OZ} CC	-150	-	150	nA	T_J ≤ 150°C; else
		-300 [1]	-	300 [1]	nA	T_J ≤ 150°C; PDD option available, or AltRef option available and EDSADC channel connected, or two EDSADC channels connected
		-300	-	300	nA	T_J ≤ 170°C; else
		-600 [2]	-	600 [2]	nA	T_J ≤ 170°C; PDD option available, or AltRef option available and EDSADC channel connected, or two EDSADC channels connected
Pin capacitance	C_{IO} CC	-	2	3	pF	in addition 2.5pF from package to be added

1) For AN11 100 nA need to be added.
2) For AN11 200 nA need to be added.

Downloaded by IFXDMZ|par-zengzhe 12/02/2019 11:04:31

Table 3-16 ADC Reference Pads

Parameter	Symbol	Values			Unit	Note / Test Condition
		Min.	Typ.	Max.		
Input leakage current for V_{AREF}	I_{OZ2} CC	-2 [1]	-	2 [1]	µA	$T_J \leq 150°C$; $V_{AREF} < V_{DDM}$; for EVADC; valid for BGA292 and BGA292 ADAS feature set
		-7 [1]	-	7 [1]	µA	$T_J \leq 150°C$; $V_{AREF} \leq V_{DDM}$+50mV; for EVADC; valid for BGA292 and BGA292 ADAS feature set
		-4 [1]	-	4 [1]	µA	$T_J \leq 170°C$; $V_{AREF} < V_{DDM}$; for EVADC; valid for BGA292 and BGA292 ADAS feature set
		-14 [1]	-	14 [1]	µA	$T_J \leq 170°C$; $V_{AREF} \leq V_{DDM}$+50mV; for EVADC; valid for BGA292 and BGA292 ADAS feature set
		-1 [2]	-	1 [2]	µA	$T_J \leq 150°C$; $V_{AREF} < V_{DDM}$; for EVADC; valid for BGA516 and Bare Die
		-2 [2]	-	2 [2]	µA	$T_J \leq 170°C$; $V_{AREF} < V_{DDM}$; for EVADC; valid for BGA516 and Bare Die
		-3.5 [2]	-	3.5 [2]	µA	$T_J \leq 150°C$; $V_{AREF} \leq V_{DDM}$+50mV; for EVADC; valid for BGA516 and Bare Die
		-7 [2]	-	7 [2]	µA	$T_J \leq 170°C$; $V_{AREF} \leq V_{DDM}$+50mV; for EVADC; valid for BGA516 and Bare Die
		-2 [3]	-	2 [3]	µA	$T_J \leq 150°C$; $V_{AREF} < V_{DDM}$; for EDSADC
		-4 [3]	-	4 [3]	µA	$T_J \leq 170°C$; $V_{AREF} < V_{DDM}$; for EDSADC
		-6 [3]	-	6 [3]	µA	$T_J \leq 150°C$; $V_{AREF} \leq V_{DDM}$+50mV; for EDSADC
		-12 [3]	-	12 [3]	µA	$T_J \leq 170°C$; $V_{AREF} \leq V_{DDM}$+50mV; for EDSADC

1) Limit is valid for VAREF2 pin.

Downloaded by IFXDMZ|par-zengzhe 12/02/2019 11:04:31

2) Limit is valid for VAREF2 and VAREF3 pins each.
3) Limit is valid for VAREF1 pin.

Table 3-17 Driver Mode Selection for Slow Pads

PDx.2	PDx.1	PDx.0	Port Functionality	Driver Setting
X	X	0	Speed grade 1	medium sharp edge (sm)
X	X	1	Speed grade 2	medium medium edge (m)

Table 3-18 Driver Mode Selection for Fast Pads

PDx.2	PDx.1	PDx.0	Port Functionality	Driver Setting
X	0	0	Speed grade 1	Strong sharp edge (ss)
X	0	1	Speed grade 2	Strong medium edge (sm)
X	1	0	Speed grade 3	medium (m)
X	1	1	Speed grade 4	Reserved, do not use this combination

Table 3-19 Driver Mode Selection for RFast Pads

PDx.2	PDx.1	PDx.0	Port Functionality	Driver Setting
X	0	0	Speed grade 1	Strong sharp edge (ss)
X	0	1	Speed grade 2	Strong medium edge (sm)
X	1	0	Speed grade 3	medium (m)
X	1	1	Speed grade 4	RGMII function is active

Downloaded by IFXDMZ|par-zengzhe 12/02/2019 11:04:31

3.6 High performance LVDS Pads

This LVDS pad type is used for the high speed chip to chip communication interface of the new TC39x. It compose out of a LVDS pad and a fast pad.

C_L = 2.5 pF for all LVDS parameters.

Table 3-20 LVDS - IEEE standard LVDS general purpose link (GPL)

Parameter	Symbol	Values			Unit	Note / Test Condition
		Min.	Typ.	Max.		
Output impedance	R_0 CC	40	-	140	Ohm	V_{cm} = 1.0 V and 1.4 V
Rise time (20% - 80%)	t_{rise20} CC	-	-	0.75 [1)]	ns	Z_L = 100 Ohm ±20% @2pF external load
Fall time (20% - 80%)	t_{fall20} CC	-	-	0.75 [2)]	ns	Z_L = 100 Ohm ±20% @2pF external load
Output differential voltage [3)]	V_{OD} CC	240	-	330	mV	R_T = 100 Ohm ±1%; LPCRx.VDIFFADJ=00
		280	-	370	mV	R_T = 100 Ohm ±1%; LPCRx.VDIFFADJ=01
		320	-	410	mV	R_T = 100 Ohm ±1%; LPCRx.VDIFFADJ=10
		380	-	500	mV	RT = 100 Ohm ± 1%; LPCRx.VDIFFADJ=11 ; Multi slave operation
Output voltage high	V_{OH} CC	-	-	1475	mV	RT = 100 Ohm +/- 1% VDIFFADJ=00 and 01
		-	-	1500	mV	RT = 100 Ohm ± 1% VDIFFADJ=10 and 11
Output voltage low	V_{OL} CC	925	-	-	mV	RT = 100 Ohm ± 1% VDIFFADJ=00 and 01
		900	-	-	mV	RT = 100 Ohm +/- 1% VDIFFADJ=10 and 11
Output offset (Common mode) voltage	V_{OS} CC	1125	-	1275	mV	RT = 100 Ohm ± 1%
Input voltage range	V_I SR	0	-	1600	mV	Driver ground potential difference < 925 mV; R_T = 100 Ohm ±10%
		0	-	2000	mV	Driver ground potential difference < 925 mV; R_T = 100 Ohm ±20%
Input differential threshold	V_{idth} SR	-100	-	100	mV	Driver ground potential difference < 925 mV
Receiver differential input impedance	R_{in} CC	80	-	120	Ohm	V_I ≤ 2000 mV
Output differential voltage Sleep Mode [4)]	V_{ODSM} CC	-5	-	20	mV	RT = 100 Ohm ± 20%; LPCRx.VDIFFADJ=xx
Delta output impedance	$dR0$ SR	-	-	10	%	V_{cm} = 1.0 V and 1.4 V

Downloaded by IFXDMZ|par-zengzhe 12/02/2019 11:04:31

Table 3-20 LVDS - IEEE standard LVDS general purpose link (GPL) (cont'd)

Parameter	Symbol	Values			Unit	Note / Test Condition
		Min.	Typ.	Max.		
Change in VOS between 0 and 1	*dVOS* CC	-	-	25	mV	R_T = 100 Ohm ±1%
Change in Vod between 0 and 1	*dVod* CC	-	-	25	mV	R_T = 100 Ohm ±1%
Pad set-up time	t_{SET_LVDS} CC	-	10	13	µs	
Duty cycle	t_{duty} CC	45	-	55	%	

1) t_{rise20} = 0.75ns + (C_L - 2)[pF]*20ps. C_L defines the external load.
2) t_{fall20} = 0.75ns + (C_L - 2)[pF]*20ps. C_L defines the external load.
3) Potencial violations of the IEEE Std 1596.3 are intended for the new multislave support feature. To be compliant to IEEE Std 1596.3 LPCRx.VDIFFADJ has to be configure to 01.
4) Common Mode voltage of Tx is maintained.

default after start-up = CMOS function

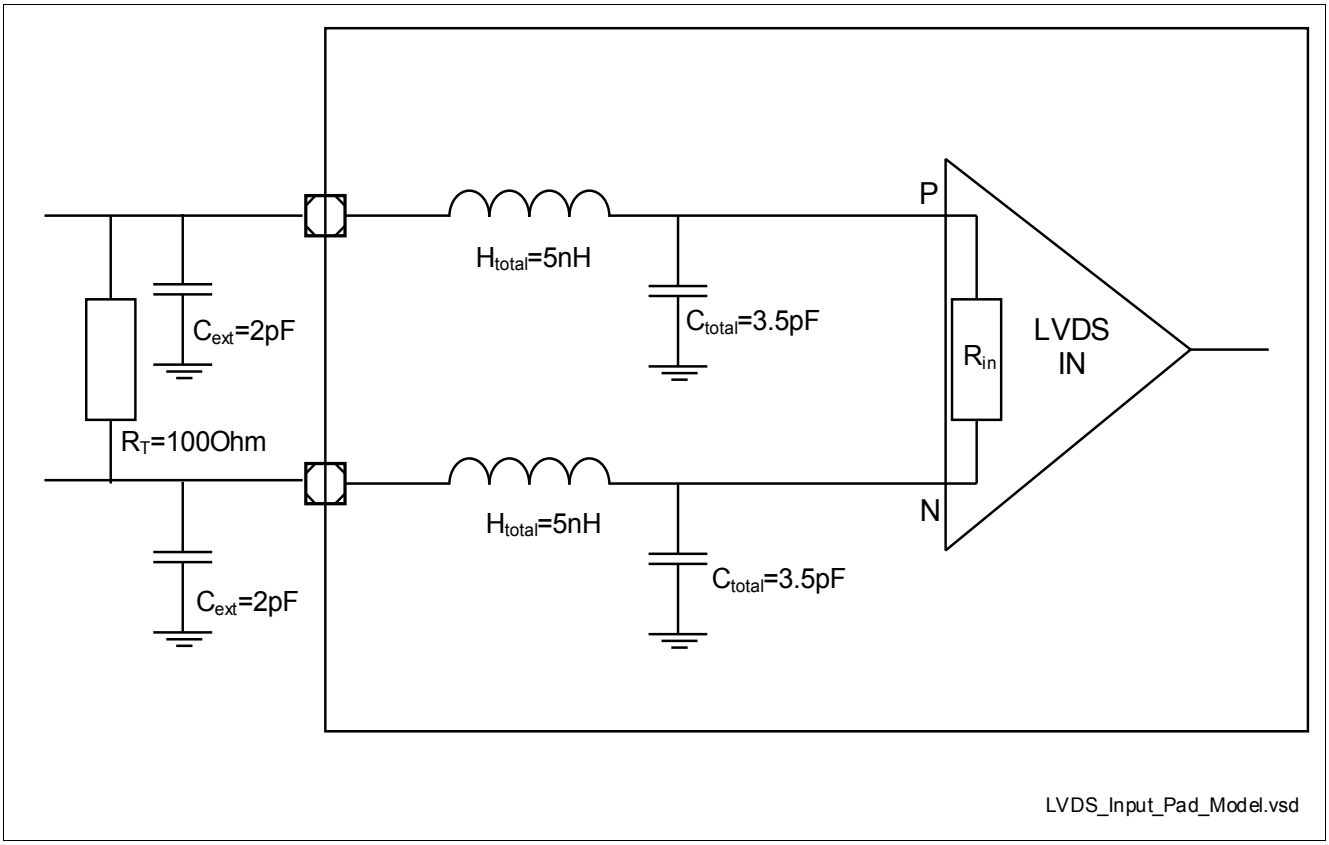

Figure 3-1 LVDS pad Input model

Downloaded by IFXDMZ|par-zengzhe 12/02/2019 11:04:31

3.7 VADC Parameters

The accuracy of the converter results depends on the reference voltage range. The parameters in the table below are valid for a reference voltage range of (V_{AREF} - V_{AGND}) >= 4.5 V. If the reference voltage range is below 4.5 V by a factor of k (e.g. 3.3 V), the accuracy parameters increase by a factor of 1.1/k (e.g. 1.1 × 4.5 / 3.3 = 1.5).

Noise on supply voltage V_{DDM} influences the conversion. The accuracy (error) parameters are defined for a supply voltage ripple of below 20 mVpp up to 10 MHz (below 5 mVpp above 10 MHz).

Digital functions overlapping analog inputs influence accuracy.

The total unadjusted error (TUE) is defined without noise. The overall deviation depends on TUE and EN_{RMS} (depending on the noise distribution). Example: For a noise distribution of 4 sigma and EN_{RMS} = 1.0 the additional peak-peak noise error is ±(4 × 1.0) = 8 LSB_{12}.

Fast compare operations are executed with 10-bit values.

The noise reduction feature improves the result by adding additional conversion steps. The conversion times, therefore, increase accordingly (4 × t_{ADCI} + 3 × t_{ADC} for each of 1, 3, or 7 steps).

Table 3-21 VADC 5V

Parameter	Symbol	Values			Unit	Note / Test Condition
		Min.	Typ.	Max.		
EVADC IVR output voltage	V_{DDK} CC	1.15	-	1.35	V	Measured at low temperature.
Deviation of IVR output voltage V_{DDK}	dV_{DDK} CC	-2	-	2	%	Based on device-specific value
Analog reference voltage [1]	V_{AREF} SR	4.5	5.0	V_{DDM} + 0.05	V	4.5 V ≤ V_{DDM} ≤ 5.5 V
		2.97	3.3	V_{DDM} + 0.05	V	2.97 V ≤ V_{DDM} < 4.5 V
Analog reference ground	V_{AGND} SR	V_{SSM}	V_{SSM}	V_{SSM}	V	V_{SSM} and V_{AGND} are connected together
Analog input voltage range	V_{AIN} SR	V_{AGND}	-	V_{AREF}	V	
Converter reference clock	f_{ADCI} SR	16	40	53.33	MHz	4.5 V ≤ V_{DDM} ≤ 5.5 V
		16	20	26.67	MHz	2.97 V ≤ V_{DDM} < 4.5 V
Total Unadjusted Error [2] [3]	TUE CC	-4	-	4	LSB	12-bit resolution for primary/secondary groups, 10-bit resolution for fast compare channels
INL Error [2]	EA_{INL} CC	-3	-	3	LSB	
DNL error [2][4]	EA_{DNL} CC	-1	-	3	LSB	
Gain Error [2]	EA_{GAIN} CC	-3.5	-	3.5	LSB	
Offset Error [2][3]	EA_{OFF} CC	-4	-	4	LSB	
RMS Noise [2][5] [6]	EN_{RMS} CC	-	0.5	0.8	LSB	Noise reduction level 3
		-	0.5	1.0	LSB	Standard conversion

Downloaded by IFXDMZ|par-zengzhe 12/02/2019 11:04:31

Table 3-21 VADC 5V (cont'd)

Parameter	Symbol	Values			Unit	Note / Test Condition
		Min.	Typ.	Max.		
Reference input charge consumption per conversion (from V_{AREF}) [7) 8) 9)]	Q_{CONV} CC	-	-	20	pC	V_{AIN} = 0 V (worst case), precharging disabled
		-	-	10	pC	V_{AIN} = 0 V (worst case), precharging enabled, V_{DDM} - 5% < V_{AREF} < V_{DDM} + 50 mV
Switched capacitance of an analog input	C_{AINS} CC	-	2.5	3.4	pF	Input buffer disabled
Analog input charge consumption [10)]	Q_{AINS} CC	-	-	3.5	pC	Primary groups and fast compare channels; V_{AIN} = V_{AREF}; V_{DDM} = 5.0 V; input buffer enabled; T_J ≤ 150°C
		-	-	3.8	pC	Primary groups and fast compare channels; V_{AIN} = V_{AREF}; V_{DDM} = 5.0 V; input buffer enabled; T_J > 150°C
		-	-	4.4	pC	Secondary groups; V_{AIN} = V_{AREF}; V_{DDM} = 5.0 V; input buffer enabled; T_J ≤ 150 °C
		-	-	4.8	pC	Secondary groups; V_{AIN} = V_{AREF}; V_{DDM} = 5.0 V; input buffer enabled; T_J > 150°C

Downloaded by IFXDMZlpar-zengzhe 12/02/2019 11:04:31

Table 3-21 VADC 5V (cont'd)

Parameter	Symbol	Values			Unit	Note / Test Condition
		Min.	Typ.	Max.		
Sampling time	t_S SR	100	-	-	ns	Primary group or fast compare channel, 4.5 V ≤ V_{DDM} ≤ 5.5 V; input buffer disabled
		300	-	-	ns	Primary group or fast compare channel, 4.5 V ≤ V_{DDM} ≤ 5.5 V; input buffer enabled
		500	-	-	ns	Secondary group, 4.5 V ≤ V_{DDM} ≤ 5.5 V; input buffer disabled
		700	-	-	ns	Secondary group, 4.5 V ≤ V_{DDM} ≤ 5.5 V; input buffer enabled
		200	-	-	ns	Primary Group or fast compare channel, 2.97 V ≤ V_{DDM} < 4.5 V; input buffer disabled
		400	-	-	ns	Primary group or fast compare channel, 2.97 V ≤ V_{DDM} < 4.5 V; input buffer enabled
		1000	-	-	ns	Secondary group, 2.97 V ≤ V_{DDM} < 4.5 V; input buffer disabled
		1200	-	-	ns	Secondary group, 2.97 V ≤ V_{DDM} < 4.5 V; input buffer enabled
Sampling time for calibration	t_{SCAL} SR	50	-	-	ns	4.5 V ≤ V_{DDM} ≤ 5.5 V
		100	-	-	ns	2.97 V ≤ V_{DDM} < 4.5 V
Input buffer switch-on time	t_{BUF} CC	-	0.4	1	µs	
Wakeup time	t_{WU} CC	-	0.1	0.2	µs	Fast standby mode
		-	1.6	3	µs	Slow standby mode
Broken wire detection delay against V_{AREF}	t_{BWR} CC	-	100	-	cycles	Result above 80% of full scale range, analog input buffer disabled
Broken wire detection delay against V_{AGND}	t_{BWG} CC	-	100	-	cycles	Result below 10% of full scale range, analog input buffer disabled
Converter diagnostics unit resistance [11)]	R_{CSD} CC	45	-	75	kOhm	
Converter diagnostics voltage accuray	dV_{CSD} CC	-10	-	10	%	Percentage refers to V_{DDM}

Downloaded by IFXDMZ|par-zengzhe 12/02/2019 11:04:31

Table 3-21 VADC 5V (cont'd)

Parameter	Symbol	Values			Unit	Note / Test Condition
		Min.	Typ.	Max.		
Resistance of the multiplexer diagnostics pull-up device	R_{MDU} CC	30	-	42	kOhm	0 V ≤ V_{IN} ≤ 0.9* V_{DDM}, Automotive Levels
		56	-	78	kOhm	0 V ≤ V_{IN} ≤ 0.9* V_{DDM}, TTL Levels
Resistance of the multiplexer diagnostics pull-down device	R_{MDD} CC	43	-	58	kOhm	0.1*V_{DDM} ≤ V_{IN} ≤ V_{DDM}, Automotive level
		18	-	25	kOhm	0.1*V_{DDM} ≤ V_{IN} ≤ V_{DDM}, TTL level
Resistance of the pull-down test device	R_{PDD} CC	-	-	0.3	kOhm	Measured at pad input voltage V_{IN} = V_{DDM} / 2.

1) These limits apply to the standard reference input as well as to the alternate reference input.
2) Parameter depends on reference voltage range and supply ripple, see introduction.
   Resulting worst case combined error is arithmetic combination of TUE and EN_{RMS}.
   Tests are done with postcalibration disabled, after completing the startup calibration.
3) Digital functions on analog inputs influence accuracy. The values for this parameter increase by 3 LSB_{12}.
4) Monotonic characteristic, no missing codes when calibrated.
5) Parameter EN_{RMS} refers to a 1 sigma distribution.
6) For analog inputs with overlaid digital GPIOs the RMS noise (EN_{RMS}) can be up to 2 LSB_{12} (soft switching for DC/DC enabled).
7) For reduced reference voltages the consumed charge is reduced by factor k.
8) Maximum charge increases by 15 pC when BWD (Broken Wire Detection) is active.
9) Fast compare channels only consume 1/3 of the charge for a primary/secondary group.
10) For analog inputs with overlaid digital GPIOs or with PDD function this value increases by 1 pC.
11) Use a sample time of at least 1.1 µs to enable proper settling of the test voltage.

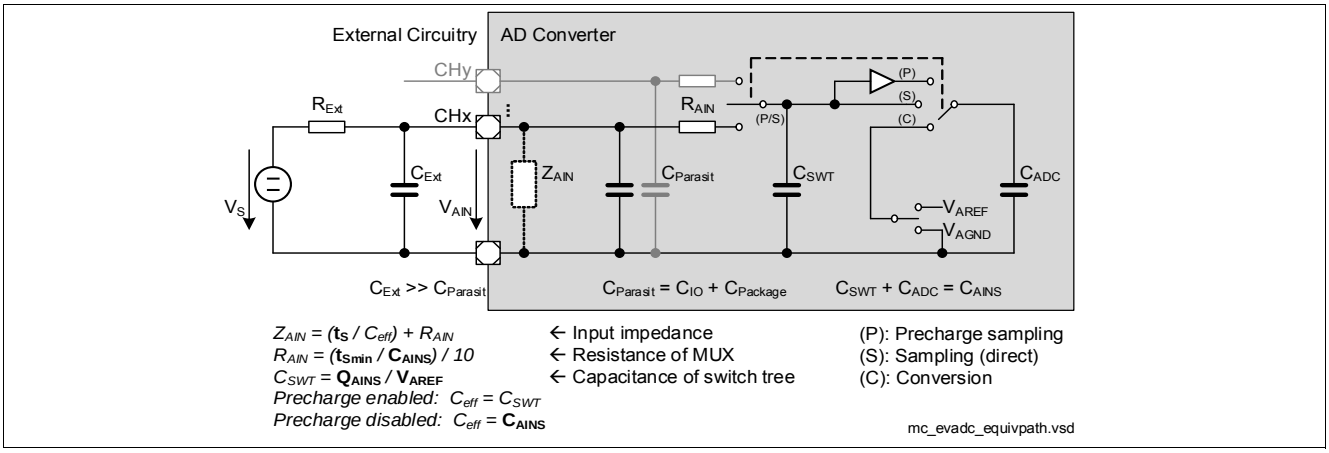

Figure 3-2 Equivalent Circuitry for Analog Inputs

Downloaded by IFXDMZ|par-zengzhe 12/02/2019 11:04:31

3.8 DSADC Parameters

The DSADC parameters are valid only for voltage range 4.5 V <= V_{DDM} <= 5.5 V.

These parameters describe the product properties and do not include external circuitry. The values are valid for junction temperatures T_J <= 150°C if not defined explicitly.

Calibration is specified for gain factors 1 and 2, calibrated values refer to these settings.

The signal-noise ratio (SNR) is specified for differential inputs. For single ended operation the resulting signal-noise ratio is reduced by 6 dB. For quasi-differential mode (i.e. using V_{CM}) it is reduced by 6 dB for gain = 1 and by 3 dB for gain= 2.

Table 3-22 DSADC 5V

Parameter	Symbol	Values			Unit	Note / Test Condition
		Min.	Typ.	Max.		
Common mode voltage bias resistance	R_{BIAS} CC	105	130	155	kOhm	On-chip variation ≤ ±2.5%.
Positive reference voltage	V_{AREF} SR	4.5	-	V_{DDM} + 0.05	V	
Reference ground voltage	V_{AGND} SR	V_{SSM}	-	V_{SSM}	V	V_{SSM} and V_{AGND} are connected together
Reference load current	I_{REF} CC	-	10	12	µA	Per modulator
		-	-	14	µA	Per modulator, T_J>150°C
Common mode voltage accuracy [1)]	dV_{CM} CC	-100	-	100	mV	Deviation from selected voltage
Analog input voltage range	V_{DSIN} SR	V_{SSM}	-	2 * V_{DDM}	V	Differential; V_{DSxP} - V_{DSxN}
		V_{SSM}	-	V_{DDM}	V	Single ended
Input current [2)]	I_{RMS} CC	-	10	15	µA	Exact value (±1%) available in UCB; valid for gain = 1 and f_{MOD} = 26.7 MHz
On-chip modulator clock frequency	f_{MOD} SR	16	-	40	MHz	
Gain error [3)]	ED_{GAIN} CC	-0.2 [4)]	±0.1[4)]	0.2 [4)]	%	T_J≤150°C; Target, calibrated, V_{AREF} constant after calibration; f_{MOD} = 26.67 MHz
		-	±0.25	-	%	T_J>150°C; V_{AREF} constant after calibration; f_{MOD} = 26.67 MHz
		-1	-	1	%	Calibrated once; f_{MOD} = 26.67 MHz
		-2.5	-	2.5	%	Uncalibrated; f_{MOD} = 26.67 MHz

Downloaded by IFXDMZ|par-zengzhe 12/02/2019 11:04:31

Table 3-22 DSADC 5V (cont'd)

Parameter	Symbol	Values			Unit	Note / Test Condition
		Min.	Typ.	Max.		
DC offset error [3]	ED_{OFF} CC	-5 [4]	-	5 [4]	mV	Calibrated; f_{MOD} = 26.67 MHz
		-10	-	10	mV	Calibrated once; f_{MOD} = 26.67 MHz
		-30	-	30	mV	Uncalibrated; f_{MOD} = 26.67 MHz
Signal-Noise Ratio for differential input signals [2][5][6]	*SNR* CC	80	-	-	dB	T_J≤150°C; f_{PB} = 30 kHz; f_{MOD} = 26.67 MHz
		78	-	-	dB	T_J≤150°C; f_{PB} = 50 kHz; f_{MOD} = 26.67 MHz
		74	-	-	dB	T_J≤150°C; f_{PB} = 100 kHz; f_{MOD} = 26.67 MHz
Signal-Noise Ratio degradation	*DSNR* CC	-	-	3	dB	T_J>150°C; Resulting Signal-Noise Ratio value is SNR - DSNR
Spurious-free dynamic range [3]	*SFDR* CC	60	-	-	dB	f_{MOD} = 26.67 MHz
Output sampling rate	f_D CC	3.906	-	300	kHz	16 MHz / 4096, without integrator
Pass band	f_{PB} CC	1.302	-	100	kHz	Output data rate: f_D = f_{PB} * 3; without integrator
		1.302	-	10	kHz	Output data rate: f_D = f_{PB} * 6; without integrator
Pass band ripple	df_{PB} CC	-0.08	-	0.08	dB	FIR filters enabled
Stop band attenuation	*SBA* CC	40	-	-	dB	0.5 f_D ... 1.0 f_D
		45	-	-	dB	1.0 f_D ... 1.5 f_D
		50	-	-	dB	1.5 f_D ... 2.0 f_D
		55	-	-	dB	2.0 f_D ... 2.5 f_D
		60	-	-	dB	2.5 f_D ... OSR/2 f_D
DC compensation factor	*DCF* CC	-3	-	-	dB	10^{-5} f_D, offset compensation filter enabled (FCFGMx.OCEN = 001_B)
Modulator settling time	t_{MSET} CC	-	-	20	µs	After switching on, voltage regulator already running

1) On pins with overlaid GPIO function the max. limit increases by up to 25 mV due to leakage current for T_J > 150°C.
2) For detailed information, refer to the User Manual chapter.
3) This parameter is valid within the defined range of f_{MOD}.
4) Recalibration needed in case of a temperature change >20ºC

Downloaded by IFXDMZ|par-zengzhe 12/02/2019 11:04:31

5) These values are valid for an analog gain factor of 1. Subtract 3 dB for each higher gain factor.
6) For single ended input signals and gain1, the SNR is reduced by 6 dB.

Downloaded by IFXDMZ\par-zengzhe 12/02/2019 11:04:31

3.9 MHz Oscillator

OSC_XTAL is used as accurate and exact clock source. OSC_XTAL supports 16 MHz to 40 MHz crystals external outside of the device. Support of ceramic resonators is also provided.

Table 3-23 OSC_XTAL

Parameter	Symbol	Values			Unit	Note / Test Condition
		Min.	Typ.	Max.		
Input current at XTAL1	I_{IX1} CC	-70	-	70	µA	V_{IN}>0V ; V_{IN}<V_{EXT}
Oscillator frequency	f_{OSC} SR	4	-	40	MHz	Direct Input Mode selected, if shaper is not bypassed
		16	-	40	MHz	External Crystal Mode selected
Oscillator start-up time	t_{OSCS} CC	-	-	3 [1]	ms	20MHz ≤ f_{OSC} and 8pF load capacitance
Input voltage at XTAL1 [2]	V_{IX} SR	-0.7	-	V_{EXT} + 0.5	V	If shaper is not bypassed
Input amplitude (peak to peak) at XTAL1	V_{PPX} SR	0.3*V_{EXT}	-	V_{EXT} + 1.0	V	If shaper is not bypassed; f_{OSC} > 25MHz
		0.35*V_{EXT}	-	V_{EXT} + 1.0	V	If shaper is not bypassed; f_{OSC} ≤ 25MHz
Internal load capacitor	C_{L0} CC	1.30	1.40	1.55	pF	enabled via bit OSCCON.CAP0EN
Internal load capacitor	C_{L1} CC	3.05	3.35	3.70	pF	enabled via bit OSCCON.CAP1EN
Internal load capacitor	C_{L2} CC	7.85	8.70	9.55	pF	enabled via bit OSCCON.CAP2EN
Internal load capacitor	C_{L3} CC	12.05	13.35	14.65	pF	enabled via bit OSCCON.CAP3EN
Internal load stray capacitor between XTAL1 and XTAL2	C_{XINTS} CC	1.15	1.20	1.25	pF	
Internal load stray capacitor between XTAL1 and ground	C_{XTAL1} CC	-	2.5	4	pF	
Duty cycle at XTAL1 [3]	DC_{X1} SR	35	-	65	%	V_{XTAL1} = 0.5*V_{PPX}
Absolute RMS jitter at XTAL1 [3]	J_{ABSX1} SR	-	-	28	ps	10 KHz to f_{OSC}/2
Slew rate at XTAL1 [3]	SR_{XTAL1} SR	0.3	-	-	V/ns	Maximum 30% difference between rising and falling slew rate

1) This value depends on the frequency of the used external crystal. For faster crystal frequencies this value decrease.
2) For supply (V_{EXT} < 5.3V V_{IX}) min could be down to -0.9V. For XTAL1 an input level down to -0.9V will not cause and damage or riability problem operating with an external crystal.
3) Square wave input signal for XTAL1.

Downloaded by IFXDMZ|par-zengzhe 12/02/2019 11:04:31

Note: It is strongly recommended to measure the oscillation allowance (negative resistance) in the final target system (layout) to determine the optimal parameters for the oscillator operation. Please refer to the limits specified by the crystal or ceramic resonator supplier.

Downloaded by IFXDMZ\par-zengzhe 12/02/2019 11:04:31

3.10 Back-up Clock

The back-up clock provides an alternative clock source.

Table 3-24 Back-up Clock

Parameter	Symbol	Values			Unit	Note / Test Condition
		Min.	Typ.	Max.		
Back-up clock accuracy before trimming	f_{BACKUT} CC	70	100	130	MHz	V_{EXT}≥2.97V
Back-up clock accuracy after trimming [1)]	f_{BACKT} CC	98	100	102	MHz	V_{EXT}≥2.97V
Standby clock	f_{SB} CC	25	70	110	kHz	V_{EXT}≥2.97V

1) A short term trimming providing the accuracy required by LIN communication is possible by periodic trimming every 2 ms for temperature and voltage drifts up to temperatures of 125 celcius

Downloaded by IFXDMZ|par-zengzhe 12/02/2019 11:04:31

3.11 Temperature Sensor

Table 3-25 DTS PMS

Parameter	Symbol	Values			Unit	Note / Test Condition
		Min.	Typ.	Max.		
Measurement time for each conversion [1]	t_M CC	-	-	2.7	ms	Measured from cold power-on reset release
Calibration reference accuracy	T_{CALACC} CC	-1	-	1	°C	calibration points @ T_J=-40°C and T_J=127°C
Accuracy over temperature range	T_{NL} CC	-2	-	2	°C	T_{CALACC} has to be added in addition
DTS temperature range	T_{SR} SR	-40	-	170	°C	

1) After warm reset t_M is not restarted and is measured from last conversion.

Table 3-26 DTS Core

Parameter	Symbol	Values			Unit	Note / Test Condition
		Min.	Typ.	Max.		
Measurement time for each conversion [1]	t_M CC	-	-	2.7	ms	Measured from cold power-on reset release
Temperature difference between on chip temperature sensors	ΔT CC	-3	-	3	°C	
Calibration reference accuracy	T_{CALACC} CC	-2	-	2	°C	calibration points @ T_J=-40°C and T_J=127°C
Accuracy over temperature range	T_{NL} CC	-2	-	2	°C	T_{CALACC} has to be added in addition
DTS temperature range	T_{SR} SR	-40	-	170	°C	

1) After warm reset t_M is not restarted and is measured from last conversion.

Downloaded by IFXDMZ|par-zengzhe 12/02/2019 11:04:31

3.12 Power Supply Current

The total power supply current defined below consists of leakage and switching component.

Application relevant values are typically lower than those given in the following table and depend on the customer's system operating conditions (e.g. thermal connection or used application configurations).

The operating conditions for the parameters in the following table are:

The real (realistic) power pattern defines the following conditions:

- T_J = 150 °C
- f_{SRI} = f_{CPUx} = 300 MHz
- f_{GTM} = 200 MHz
- f_{SPB} = f_{STM} = f_{BAUD1} = f_{BAUD2} = $f_{ASCLINx}$ = 100 MHz
- V_{DD} = 1.275 V
- V_{DDP3} / FLEX = 3.366 V
- $V_{EXT\,/\,EVRSB\,/\,M}$ = V_{DDM} = 5.1 V
- all cores are active including four lockstep cores (IPC=0.6)
- the following modules are inactive: HSM, HSCT, GETH, Ethernet, PSI5, I2C, FCE, EBU, SPU, RIF, and MTU

The max power pattern defines the following conditions:

- T_J = 150 °C
- f_{SRI} = f_{CPUx} = 300 MHz
- f_{GTM} = 200 MHz
- f_{SPB} = f_{STM} = f_{BAUD1} = f_{BAUD2} = $f_{ASCLINx}$ = 100 MHz
- V_{DD} = 1.375 V
- V_{DDP3} / FLEX = 3.63 V
- $V_{EXT\,/\,EVRSB\,/\,M}$ = V_{DDM} = 5.5 V
- all cores are active including four lockstep cores (IPC=1.2)
- the following modules are inactive: GETH, FCE, SPU, RIF, and MTU

The ADAS power pattern defines the following conditions:

- T_J = 125 °C
- f_{SRI} = f_{CPUx} = 300 MHz
- f_{GTM} = 100 MHz
- f_{SPU} = 300 MHz; (FFT length =512)
- f_{SPB} = f_{STM} = f_{BAUD1} = f_{BAUD2} = $f_{ASCLINx}$ = 100 MHz
- V_{DD} = 1.275 V
- $V_{DDP3/EXT/FLEX/EVRSB}$ = V_{DDM} = 3.366 V
- CPU0 and CPU1 (IPC=1.2) and CPU2 (IPC=0.6) cores are active including three lockstep cores; CPU3 (IPC=0.6) is active without lockstep core
- Only EVADC0 and EVADC1 are active
- the following modules are inactive: CPU4, CPU5, HSM, HSCT, GETH, PSI5, I2C, FCE, EBU, MSC, DSADC, and MTU

Downloaded by IFXDMZlpar-zengzhe 12/02/2019 11:04:31

Table 3-27 Current Consumption

Parameter	Symbol	Values			Unit	Note / Test Condition
		Min.	Typ.	Max.		
∑ Sum of I_{DD} core and peripheral supply currents (incl. $I_{DDPORST}$+ ∑ I_{DDCx0}+ ∑ I_{DDCxx}+ I_{DDGTM}+ I_{DDSB})	I_{DDRAIL} CC	-	-	1500	mA	ADAS power pattern
		-	-	1640	mA	max power pattern; T_J=150°C
		-	-	1372	mA	real power pattern; T_J=150°C
		-	-	1556	mA	real power pattern; T_J=160°C
I_{DD} core current during active power-on reset (PORST pin held low). Leakage current of core domain. [1]	$I_{DDPORST}$ CC	-	-	300	mA	V_{DD} = 1.275V; T_J=125°C
		-	-	575	mA	V_{DD} = 1.275V; T_J=150°C
		-	-	759	mA	V_{DD} = 1.275V; T_J=160°C
		-	-	835	mA	V_{DD} = 1.275V; T_J=165°C
∑ Sum of I_{DDP3} 3.3 V supply currents	$I_{DDP3RAIL}$ CC	-	-	50 [2]	mA	ADAS power pattern incl. Flash read current and Dflash programming current.
		-	-	60 [2]	mA	max power pattern incl. Flash read current and Dflash programming current.
		-	-	50 [2]	mA	real power pattern incl. Flash read current and Dflash programming current.
∑ Sum of external I_{EXT} supply currents (incl. $I_{EXTFLEX}$+I_{EVRSB}+$I_{EXTLVDS}$)	$I_{EXTRAIL}$ CC	-	-	60	mA	max power pattern
		-	-	54 [3]	mA	real power pattern
I_{EXT} and I_{FLEX} supply current	$I_{EXTFLEX}$ CC	-	-	22 [1][4] [5]	mA	real power pattern with port activity absent; PORST output inactive.
I_{EVRSB} supply current [1]	I_{EVRSB} CC	-	-	8	mA	real power pattern; PMS/EVR module current considered without SCR and Standby RAM during RUN mode.

Downloaded by IFXDMZlpar-zengzhe 12/02/2019 11:04:31

Table 3-27 Current Consumption (cont'd)

Parameter	Symbol	Values			Unit	Note / Test Condition
		Min.	Typ.	Max.		
∑ Sum of external I_{DDM} supply currents (incl. $I_{DDMEVADC}$+$I_{DDMEDSADC}$)	I_{DDM} CC	-	-	60	mA	real power pattern; sum of currents of EDSADC and EVADC modules
∑ Sum of all currents (incl. $I_{EXTRAIL}$+$I_{DDMRAIL}$+$I_{DDx3RAIL}$+I_{DD})	I_{DDTOT} CC	-	-	1536	mA	real power pattern; T_J=150°C
		-	-	1720	mA	real power pattern; TJ=160°C
∑ Sum of all currents with DC-DC EVRC regulator active [6)]	$I_{DDTOTDC3}$ CC	-	-	980	mA	real power pattern; EVRC reset settings with 72% efficiency; V_{EXT} = 3.3V; T_J=160°C
∑ Sum of all currents with DC-DC EVRC regulator active [6)]	$I_{DDTOTDC5}$ CC	-	-	670	mA	real power pattern; EVRC reset settings with 72% efficiency; V_{EXT} = 5V; T_J=160°C
∑ Sum of all currents (SLEEP mode) [1)]	I_{SLEEP} CC	-	-	38	mA	All CPUs in idle, All peripherals in sleep, $f_{SRI/SPB}$ = 1 MHz via LPDIV divider; T_J = 25°C
∑ Sum of all currents (STANDBY mode) drawn at V_{EVRSB} supply pin [7)]	$I_{STANDBY}$ CC	-	-	130 [8)]	µA	32 kB Standby RAM block active. SCR inactive. Power to remaining domains switched off. T_J = 25°C; V_{EVRSB} = 5V
Maximum power dissipation	PD SR	-	-	2240	mW	ADAS power pattern; T_J=125°C
		-	-	3220	mW	max power pattern; T_J=150°C
		-	-	2500	mW	real power pattern; T_J=150°C

1) Limits are defined for real power pattern (V_{DD}=1.275V). For max power pattern limit has to be multiplied by the factor 1.22.
2) Realistic Pflash read pattern with 50% Pflash bandwidth utlilization and a code mix of 50% 0s and 50% 1s. A common decoupling capacitor of atleast 100nF for (V_{DDP3}) is used. Continuous Dflash programming in burst mode with 3.3 V supply and realistic Pflash read access in parallel. Erase currents of the corresponding flash modules are less than the respective programming currents at V_{DDP3} pin. Programming and erasing flash may generate transient current spikes of up to x mA for maximum x us which is handled by the decoupling and buffer capacitors. This parameter is relevant for external power supply dimensioning and not for thermal considerations.
3) Limits are defined for real power pattern. For ADAS power pattern limit sum up to 40mA.
4) The current consumption includes only minimal port activity.
5) Limits are defined for real power pattern. For ADAS power pattern limit has to be multiplied by the factor 0.7.
6) The total current drawn from external regulator is estimated with 72% EVRC SMPS regulator efficiency. IDDTOTDCx is calculated from IDDTOT using the scaled core current [(IDD x VDD)/(VinxEfficiency)] and constitutes all other rail currents and IDDM.

Downloaded by IFXDMZ|par-zengzhe 12/02/2019 11:04:31

7) The same current limits apply also for the other power pattern.
8) ∑ Sum of all currents during RUN mode at VEVRSB supply pin is less than (IEVRSB + 4 mA Standby RAM current + ISCRSB if SCR active). ∑ Sum of all currents during STANDBY mode at VEVRSB supply pin is less than (ISTANDBY + ISCRSB if SCR active). It is recommended to have atleast 100 nF decoupling capacitor at this pin. 32kB of Standby SRAM contributes less than 10uA to ISTANDBY current.

Table 3-28 Module Current Consumption

Parameter	Symbol	Values			Unit	Note / Test Condition
		Min.	Typ.	Max.		
I_{DDP3} supply current for programming of a Pflash or Dflash bank [1]	$I_{DDP3PROG}$ CC	-	-	25	mA	Pflash 3.3V programming current adder when using external 3.3V supply.
		-	-	9 [2]	mA	Pflash 3.3V programming current adder when using external 5V supply.
I_{EXT} supply current added by LVDS pads in LVDS mode [1]	$I_{EXTLVDS}$ CC	-	-	9 [3]	mA	real power pattern; 6 pairs of LVDS pins active with receive function
		-	-	24	mA	real power pattern; 6 pairs of LVDS pins active with transmit function

Downloaded by IFXDMZ|par-zengzhe 12/02/2019 11:04:31

Table 3-28 Module Current Consumption (cont'd)

Parameter	Symbol	Values			Unit	Note / Test Condition
		Min.	Typ.	Max.		
∑ Sum of external I_{DDM} supply currents (incl. $I_{DDMEVADC}$+$I_{DDMEDSADC}$)	I_{DDM} CC	-	-	44	mA	real power pattern; current for EDSADC modules only and EVADC modules are inactive; 11 EDSADC channels active continuously.
		-	-	63 [4)]	mA	max power pattern; current for EDSADC modules only and EVADC modules are inactive; all EDSADC channels active continuously.
		-	-	16 [5)]	mA	real power pattern; current for EVADC modules only and EDSADC modules are inactive; 12 EVADC modules active.
		-	-	20 [6)]	mA	max power pattern; current for EVADC modules only and EDSADC modules are inactive; all EVADC modules active.
I_{DDP3} supply current for erasing of a Pflash or Dflash bank	$I_{DDP3ERASE}$ CC	-	-	25	mA	Pflash 3.3V erasing current adder when using external 3.3V supply.
SCR 8-bit Standby Controller current incl. PMS in STANDBY Mode drawn at V_{EVRSB} supply pin	I_{SCRSB} CC	-	-	7.5 [7)]	mA	SCR power pattern incl. PMS current consumption with fback clock active; f_{SYS_SCR} = 20MHz; T_J=150°C
		-	0.150	-	mA	SCR power pattern incl. PMS current consumption with fback inactive; fSYS_SCR = 70kHz; T_J=25°C
SCR 8-bit Standby Controller CPU in IDLE mode [8)]	$I_{SCRIDLE}$ CC	-	-	3.5	mA	real power pattern. CPU set into idle mode.

Downloaded by IFXDMZ|par-zengzhe 12/02/2019 11:04:31

1) The same current limits apply also for the other power pattern.
2) During Pflash programming at 5V, additional 3 mA is drawn at VEXT supply rail.
3) A single LVDS pair with receive function is limited to 1.5mA ($t_{EXTLVDS}$).
4) A single DS channel instance consumes 4 mA.
5) EVADC current is limited to 3mA in "ADAS power pattern with 2 EVADC" at (I_{DDM}).
6) A single VADC unit consumes 1.3 mA.
7) If SCR ADCOMP is activated, an additional 0.6 mA adder is to be considered.
8) Limits are defined for real power pattern (V_{DD}=1.275V). For max power pattern limit has to be multiplied by the factor 1.22.

Table 3-29 Module Core Current Consumption

Parameter	Symbol	Values			Unit	Note / Test Condition
		Min.	Typ.	Max.		
I_{DD} core current of CPUx main core with CPUx lockstep core inactive	I_{DDCx0} CC	-	-	70	mA	max power pattern; IPC=1.2
		-	-	45	mA	real power pattern; IPC=0.6
I_{DD} core current of CPUx main core with CPUx lockstep core active	I_{DDCxx} CC	-	-	I_{DDCx0} + 50	mA	max power pattern; IPC=1.2
		-	-	I_{DDCx0} + 40	mA	real power pattern; IPC=0.6
I_{DD} core current added by GTM	I_{DDGTM} CC	-	-	160	mA	max power pattern
		-	-	130	mA	real power pattern; TIMx, TOMx, ATOMx , MCSx active. 3 clusters at 200 MHz.
		-	-	60	mA	TIMx, TOMx active at 100MHz. ATOMx , MCSx, DPLL inactive. 2 clusters at 100 MHz.
I_{DD} core current added by HSM	I_{DDHSM} CC	-	-	20 [1)]	mA	max power pattern; HSM running at 100MHz.
I_{DD} core current added by SPU	I_{DDSPU2} CC	-	-	310 [2)]	mA	CTRL.DIV = 00; SPU @ 300 MHz; FFT length 512; DATSRC=EMEM.
I_{DD} core dynamic current load jump during IDDSPU2 pattern.	$I_{DDSPULJ2}$ CC	-	-	310 [3)]	mA	CTRL.DIV = 00; SPU @ 300 MHz; FFT length 512; DATSRC=EMEM.

Downloaded by IFXDMZ|par-zengzhe 12/02/2019 11:04:31

Table 3-29 Module Core Current Consumption (cont'd)

Parameter	Symbol	Values			Unit	Note / Test Condition
		Min.	Typ.	Max.		
I_{DD} core dynamic current added by LBIST	$I_{DDLBIST}$ CC	-	-	150 [4]	mA	LBIST Configuration A; 1.2V ≤ V_{DD}
I_{DD} core dynamic current added by MBIST	$I_{DDMBIST}$ CC	-	-	225	mA	fMBIST = 300MHz; tMBIST < 6ms. MTU Ganging procedure for SRAM test and initialization; VDD = 1.375V.

1) The current consumption includes basic HSM activity incl. AES module.
2) The current is estimated as the sum of the SPU base load current at clock activation and average current caused by SPU dynamic activity as defined in the conditions. Secondary Voltage Monitor over-voltage threshold shall be set to VDD + 10% and under-voltage threshold shall be set to VDD - 9% respectively.
During the SPU operational phase for I_{DDSPU1} usecase, the externally supplied V_{DD} voltage has to be equal or greater than 1.225V (V_{DD} nominal - 2%) for static accuracy part and the overall static and dynamic at the V_{DD} supply pin shall be limited to (V_{DD} nominal -8%).
3) The dynamic current load jump during SPU activity as defined by the conditions observed at the VDD pin beyond a settling time duration of 20 us.
4) LBIST is executed either during start-up phase or can be triggered by application software. Secondary voltage monitors are inactive during the LBIST execution time (t_{LBIST}).
During the start-up phase externally supplied V_{DD} voltage has to be equal or greater than 1.2V (V_{DD} nominal - 4%) for static accuracy.
If V_{DD} is supplied internally by EVRC, EVRC takes care not to violate the V_{DD} 1.2V static under voltage limit.

3.12.1 Calculating the 1.25 V Current Consumption

The current consumption of the 1.25 V rail compose out of two parts:

- Static current consumption
- Dynamic current consumption

The static current consumption is related to the device temperature T_J and the dynamic current consumption depends of the configured clocking frequencies and the software application executed. These two parts needs to be added in order to get the rail current consumption.

$$I_0 = 5,8871\left[\frac{mA}{C}\right] \times e^{0,0246 \times T_J[C]} \tag{3.1}$$

$$I_0 = 16,4863\left[\frac{mA}{C}\right] \times e^{0,0232 \times T_J[C]} \tag{3.2}$$

Equation (3.1) defines the typical static current consumption and **Equation (3.2)** defines the maximum static current consumption. Both functions are valid for V_{DD} = 1.275 V.

3.13 Power Supply Infrastructure and Supply Start-up

Downloaded by IFXDMZ|par-zengzhe 12/02/2019 11:04:31

3.13.1 Supply Ramp-up and Ramp-down Behavior

3.13.1.1 Single Supply mode (a)

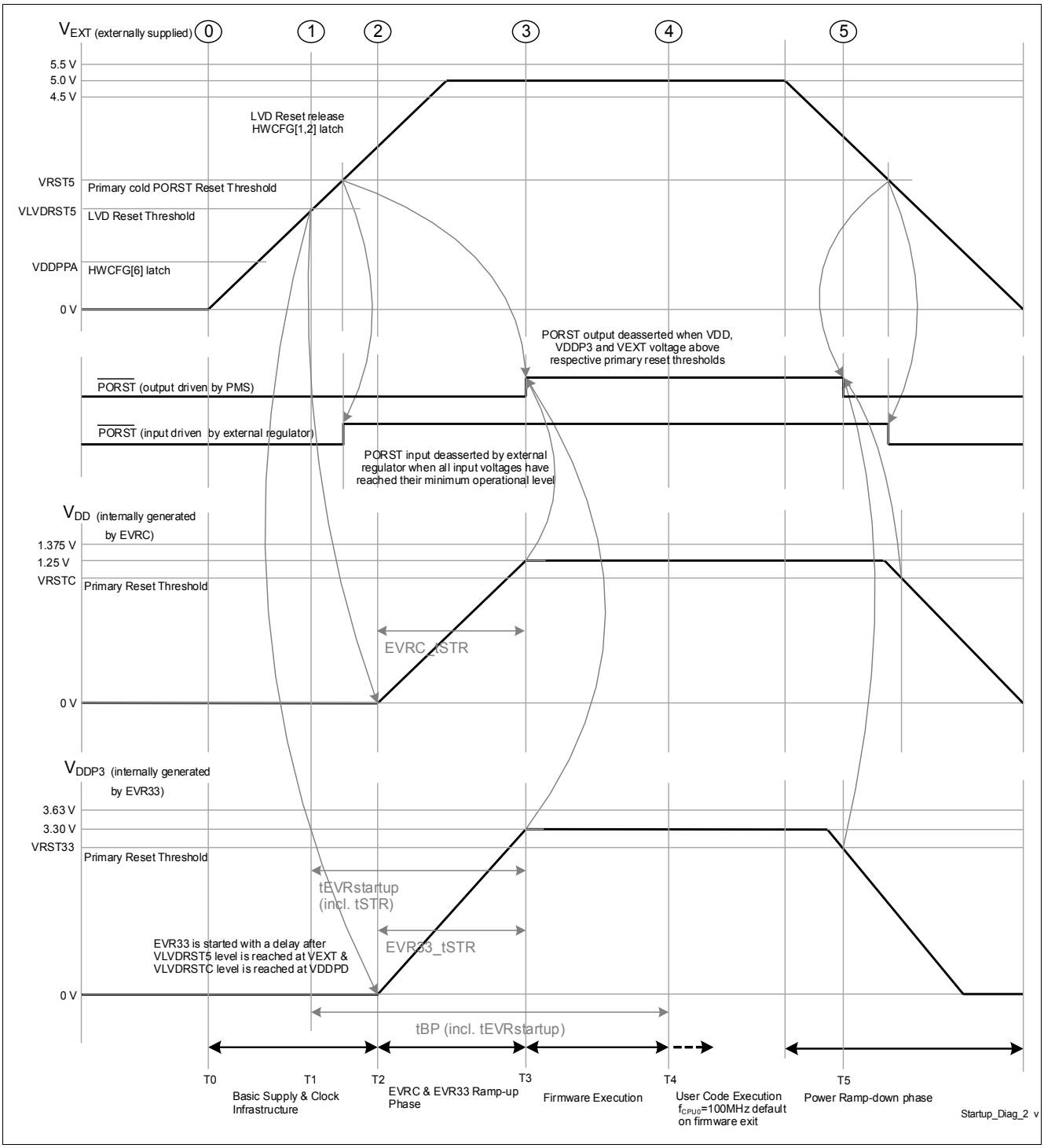

Figure 3-3 Single Supply mode (a) - VEXT (5 V) single supply

Downloaded by IFXDMZ|par-zengzhe 12/02/2019 11:04:31

VEXT = 5 V single supply mode. VDD and VDDP3 are generated internally by the EVRC and EVR33 internal regulators.

- The rate at which current is drawn from the external regulator (dIEXT /dt) is limited during the basic infrastructure and EVRx regulator start-up phase (T0 up to T2) to a maximum of 100 mA with 100 us settling time. Start-up slew rates for supply rails shall comply to datasheet parameter SR. The slope is defined as the maximal tangential slope between 0% to 100% voltage level. Actual waveform may not represent the specification.
- Furthermore it is also ensured that the current drawn from the regulator (dIDD/dt) is limited during the Firmware start-up phase (T3 up to T4) to a maximum of 100 mA with 100 us settling time.
- PORST is active/asserted when either PORST (input) or PORST (output) is active/asserted.
- PORST (input) active means that the reset is held active by external agents by pulling the PORST pin low. It is recommended to keep the PORST (input) asserted until the external supply is above the respective primary reset threshold.
- PORST (output) active means that µC asserts the reset internally and drives the PORST pin low thus propagating the reset to external devices. The PORST (output) is asserted by the µC when atleast one among the three supply domains (VDD, VDDP3 or VEXT) violate their primary under-voltage reset thresholds.The PORST (output) is de-asserted by the µC when all supplies are above their primary reset thresholds and the basic supply and clock infrastructure is available. During reset release at T3, the load jump of upto 150 mA (dIDD) is expected.
- The power sequence as shown in **Figure 3-3** is enumerated below
  - T1 up to T2 refers to the period in time when basic supply and clock infrastructure components are available as the external supply ramps up. The bandgap and internal clock sources are started .The supply mode is evaluated based on the HWCFG[2:1,4,5,6] and TESTMODE pins. T1 up to T2 refers to the period in time when basic supply and clock infrastructure components are available as the external supply ramps up. The bandgap and internal clock sources are started .The supply mode is evaluated based on the HWCFG[2:1,6] pins. These events are initiated after LVD reset release at T1. LVD reset is released the both input voltages VEXT and VEVRSB are above VLVDRST5 and VLVDRSTSB levels correspondingly. Internal pre-regulator VDDPD output voltage is above VLVDRSTC level.
  - T2 refers to the point in time where consequently a soft start of EVRC and EVR33 regulators are initiated. PORST (input) does not have any affect on EVR33 or EVRC output and regulators continue to generate the respective voltages though PORST is asserted and the device is in reset state. The generated voltage follows a soft ramp-up over the tSTR (datasheet parameter) time to avoid overshoots.
  - T3 refers to the point in time when all supplies are above their primary reset thresholds denoted by VRST5, VRST33 and VRSTC supply voltage levels. EVRC and EVR33 regulators have ramped up.
    PORST (output) is de-asserted and HWCFG[3:5] pins are latched on PORST rising edge by SCU. Firmware execution is initiated. The time between T1 and T3 is documented as tEVRstartup (datasheet parameter).
  - T4 refers to the point in time when Firmware execution is completed and User code execution starts with CPU0 at a default frequency of 100 MHz. The time between T0 and T4 is documented as tBP (datasheet parameter).
  - T5 refers to the point in time during the ramp-down phase when at least one of the externally provided or generated supplies (VDD, VDDP3 or VEXT) drop below their respective primary under-voltage reset thresholds.

Downloaded by IFXDMZlpar-zengzhe 12/02/2019 11:04:31

3.13.1.2 Single Supply mode (e)

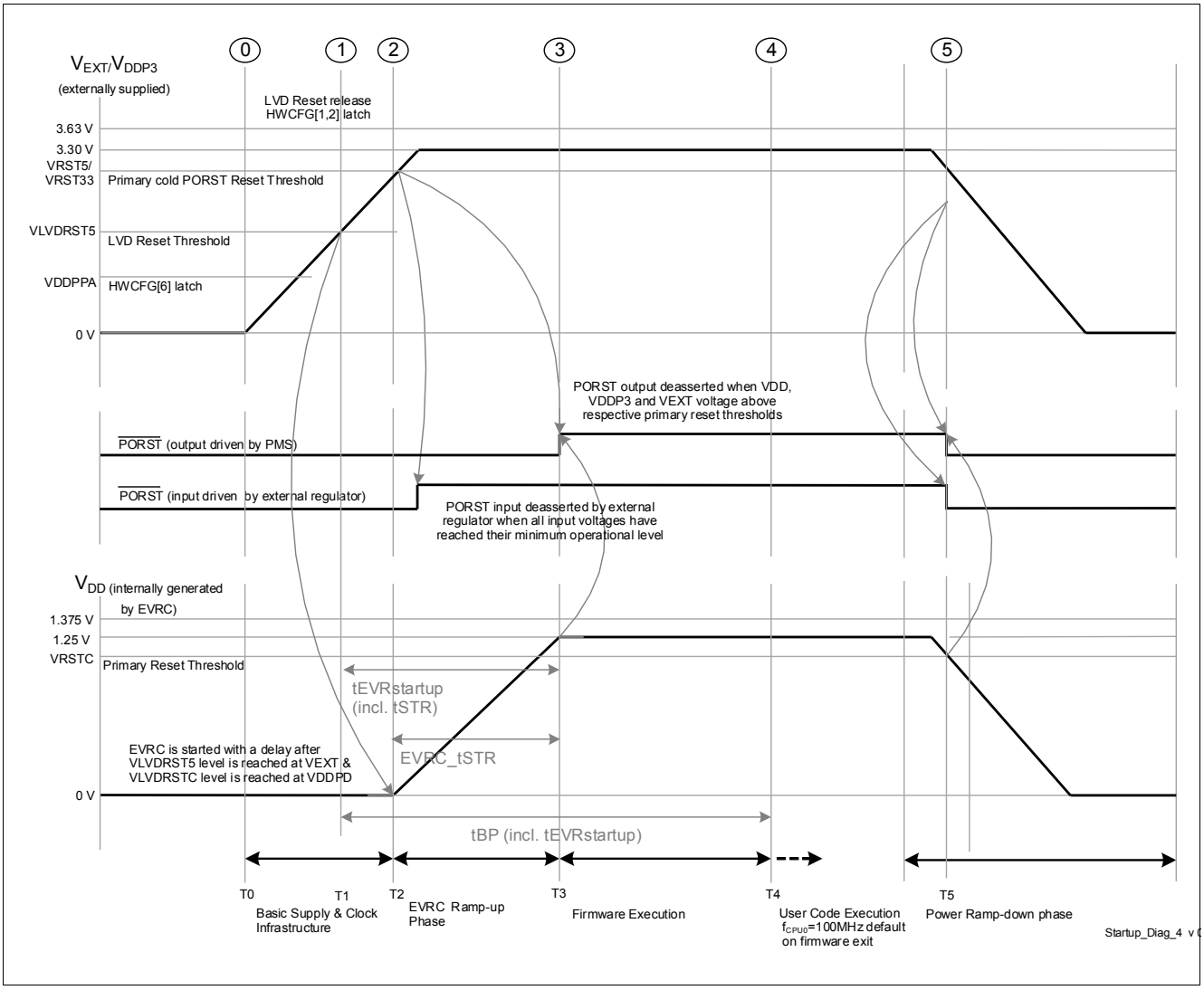

Figure 3-4 Single Supply mode (e) - (VEXT & VDDP3) 3.3 V single supply

VEXT = VDDP3 = 3.3 V single supply mode. VDD is generated internally by the EVRC regulator.

- The rate at which current is drawn from the external regulator (dIEXT /dt) is limited in the Start-up phase to a maximum of 100 mA with 100 us settling time. Start-up slew rates for supply rails shall comply to datasheet parameter SR. The slope is defined as the maximal tangential slope between 0% to 100% voltage level. Actual waveform may not represent the specification.
- PORST is active/asserted when either PORST (input) or PORST (output) is active/asserted.
- PORST (input) active means that the reset is held active by external agents by pulling the PORST pin low. It is recommended to keep the PORST (input) asserted until the external supply is above the respective primary reset threshold.
- PORST (output) active means that µC asserts the reset internally and drives the PORST pin low thus propagating the reset to external devices. The PORST (output) is asserted by the µC when at least one among the three supply domains (VDD, VDDP3 or VEXT) violate their primary under-voltage reset thresholds.The PORST (output) is de-asserted by the µC when all supplies are above their primary reset thresholds and the

Downloaded by IFXDMZ|par-zengzhe 12/02/2019 11:04:31

basic supply and clock infrastructure is available. During reset release at T3, the load jump of upto 150 mA (dIDD) is expected.

- The power sequence as shown in **Figure 3-4** is enumerated below
  - T1 up to T2 refers to the period in time when basic supply and clock infrastructure components are available as the external supply ramps up. The bandgap and internal clock sources are started .The supply mode is evaluated based on the HWCFG[2:1,4,5,6] and TESTMODE pins. T1 up to T2 refers to the period in time when basic supply and clock infrastructure components are available as the external supply ramps up. The bandgap and internal clock sources are started .The supply mode is evaluated based on the HWCFG[2:1,6] pins. These events are initiated after LVD reset release at T1. LVD reset is released the both input voltages VEXT and VEVRSB are above VLVDRST5 and VLVDRSTSB levels correspondingly. Internal pre-regulator VDDPD output voltage is above VLVDRSTC level.
  - T2 refers to the point in time where consequently a soft start of EVRC regulator is initiated. PORST (input) does not have any affect on EVRC output and regulators continue to generate the respective voltages though PORST is asserted and the device is in reset state. The generated voltage follows a soft ramp-up over the tSTR (datasheet parameter) time to avoid overshoots.
  - T3 refers to the point in time when all supplies are above their primary reset thresholds denoted by VRST5, VRST33 and VRSTC supply voltage levels. EVRC regulator has ramped up. PORST (output) is de-asserted and HWCFG[3:5] pins are latched on PORST rising edge by SCU. Firmware execution is initiated. The time between T1 and T3 is documented as tEVRstartup (datasheet parameter).
  - T4 refers to the point in time when Firmware execution is completed and User code execution starts with CPU0 at a default frequency of 100 MHz. The time between T0 and T4 is documented as tBP (datasheet parameter).
  - T5 refers to the point in time during the ramp-down phase when at least one of the externally provided or generated supplies (VDD, VDDP3 or VEXT) drop below their respective primary under-voltage reset thresholds.

Downloaded by IFXDMZ|par-zengzhe 12/02/2019 11:04:31

3.13.1.3 External Supply mode (d)

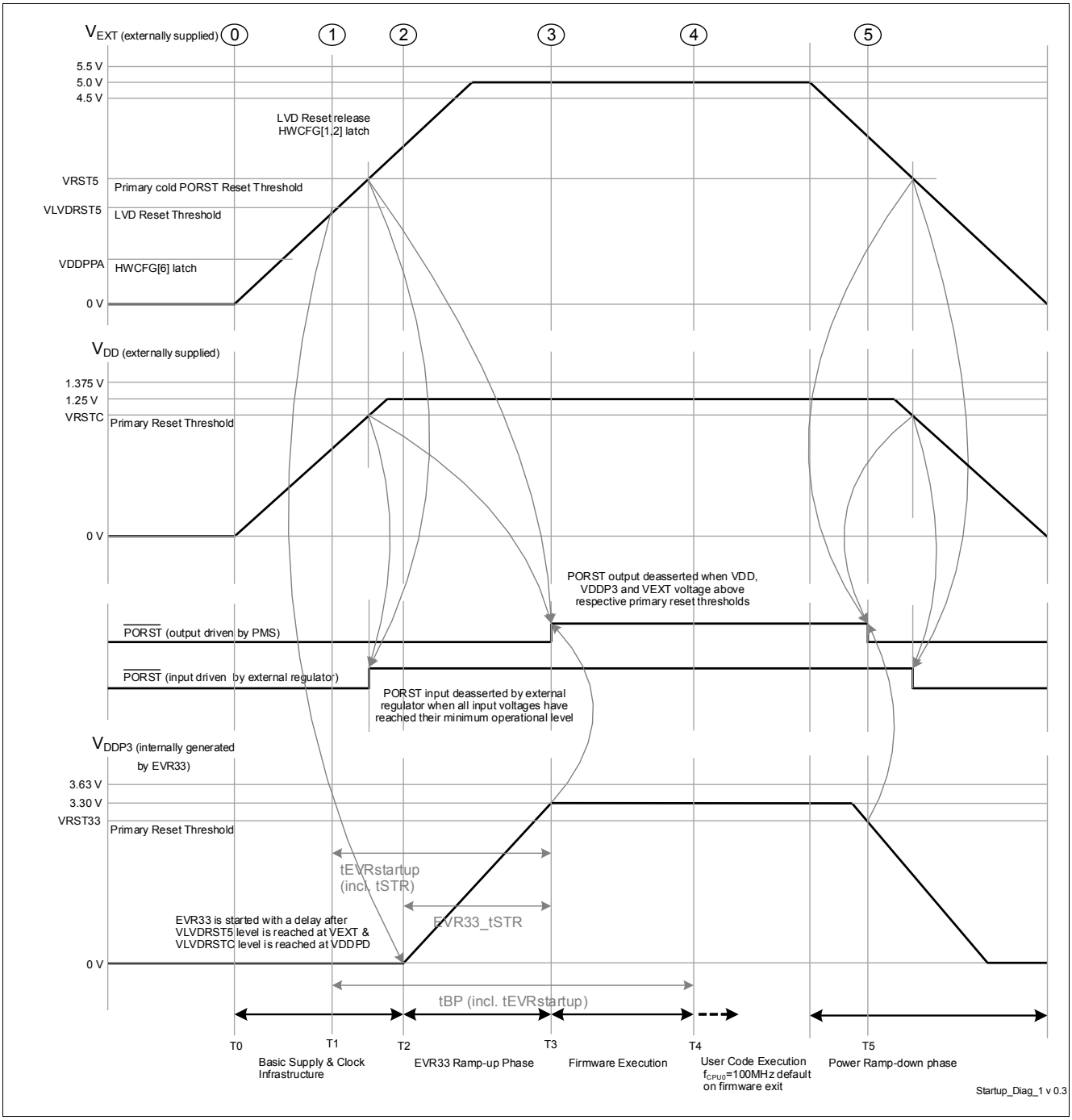

Figure 3-5 External Supply mode (d) - VEXT and VDD externally supplied

VEXT = 5 V and VDD supplies are externally supplied. 3.3V is generated internally by the EVR33 regulator.

- External supplies VEXT and VDD may ramp-up or ramp-down independent of each other with regards to start, rise and fall time(s). Start-up slew rates for supply rails shall comply to datasheet parameter SR. The slope is defined as the maximal tangential slope between 0% to 100% voltage level. Actual waveform may not represent the specification. It is expected that during start-up, VEXT ramps up before VDD rail. If VDD voltage

Downloaded by IFXDMZ|par-zengzhe 12/02/2019 11:04:31

rail is ramped up before VEXT; VDD supply overshoots during start-up shall be limited within the operational voltage range.

- The rate at which current is drawn from the external regulator (dIEXT /dt or dIDD /dt) is limited in the Start-up phase to a maximum of 100 mA with 100 us settling time.
- PORST is active/asserted when either PORST (input) or PORST (output) is active/asserted.
- PORST (input) active means that the reset is held active by external agents by pulling the PORST pin low. It is recommended to keep the PORST (input) asserted until all the external supplies are above their primary reset thresholds.
- PORST (output) active means that µC asserts the reset internally and drives the PORST pin low thus propagating the reset to external devices. The PORST (output) is asserted by the µC when at least one among the three supply domains (VDD, VDDP3 or VEXT) violate their primary under-voltage reset thresholds.The PORST (output) is de-asserted by the µC when all supplies are above their primary reset thresholds and the basic supply and clock infrastructure is available. During reset release at T3, the load jump of upto 150 mA (dIDD) is expected.
- The power sequence as shown in **Figure 3-5** is enumerated below
  - T1 up to T2 refers to the period in time when basic supply and clock infrastructure components are available as the external supply ramps up. The bandgap and internal clock sources are started. The supply mode is evaluated based on the HWCFG[2:1,4,5,6] and TESTMODE pins. T1 up to T2 refers to the period in time when basic supply and clock infrastructure components are available as the external supply ramps up. The bandgap and internal clock sources are started .The supply mode is evaluated based on the HWCFG[2:1,6] pins. These events are initiated after LVD reset release at T1. LVD reset is released the both input voltages VEXT and VEVRSB are above VLVDRST5 and VLVDRSTSB levels correspondingly. Internal pre-regulator VDDPD output voltage is above VLVDRSTC level.
  - T2 refers to the point in time where consequently a soft start of EVR33 regulator is initiated. PORST (input) does not have any affect on EVR33 output and regulators continue to generate the respective voltages though PORST is asserted and the device is in reset state. The generated voltage follows a soft ramp-up over the tSTR (datasheet parameter) time to avoid overshoots.
  - T3 refers to the point in time when all supplies are above their primary reset thresholds denoted by VRST5, VRST33 and VRSTC supply voltage levels. EVR33 regulators has ramped up. PORST (output) is de-asserted and HWCFG[3:5] pins are latched on PORST rising edge by SCU. Firmware execution is initiated. The time between T1 and T3 is documented as tEVRstartup (datasheet parameter).
  - T4 refers to the point in time when Firmware execution is completed and User code execution starts with CPU0 at a default frequency of 100 MHz. The time between T0 and T4 is documented as tBP (datasheet parameter).
  - T5 refers to the point in time during the ramp-down phase when at least one of the externally provided or generated supplies (VDD, VDDP3 or VEXT) drop below their respective primary under-voltage reset thresholds.

Downloaded by IFXDMZlpar-zengzhe 12/02/2019 11:04:31

3.13.1.4 External Supply mode (h)

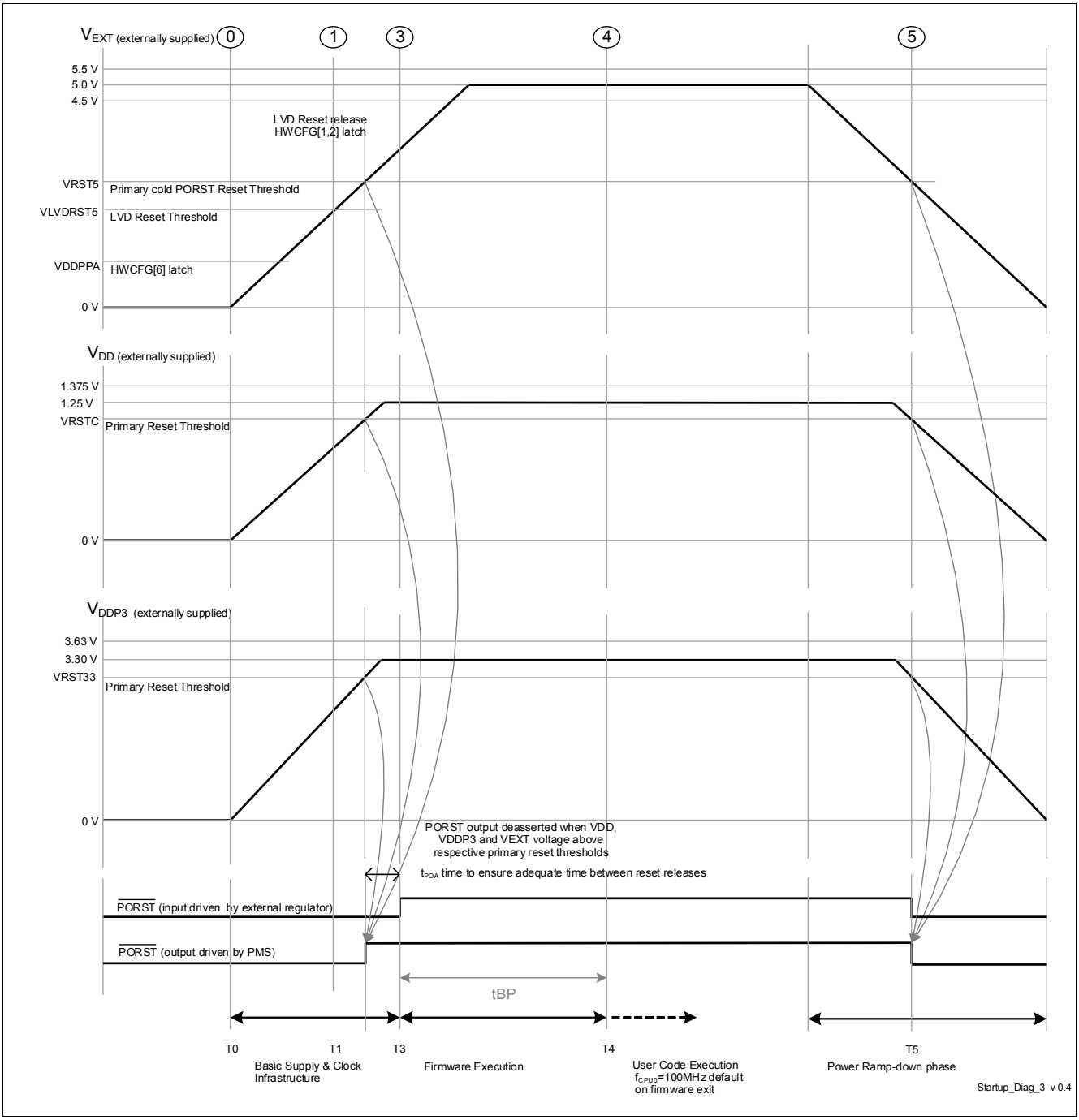

Figure 3-6 External Supply mode (h) - VEXT, VDDP3 & VDD externally supplied

All supplies, namely VEXT, VDDP3 & VDD are externally supplied.

- External supplies VEXT, VDDP3 & VDD may ramp-up or ramp-down independent of each other with regards to start, rise and fall time(s). Start-up slew rates for supply rails shall comply to datasheet parameter SR. The slope is defined as the maximal tangential slope between 0% to 100% voltage level. Actual waveform may not represent the specification. It is expected that during start-up, VEXT ramps up before VDDP3 and VDD rails. If smaller voltage rails are ramped up before VEXT; VDD and VDDP3 supply overshoots during start-up shall be limited within the operational voltage ranges of the respective rails.

Downloaded by IFXDMZ|par-zengzhe 12/02/2019 11:04:31

- The rate at which current is drawn from the external regulator (dIEXT /dt, dIDD /dt or dIDDP3 /dt) is limited in the Start-up phase to a maximum of 100 mA with 100 us settling time.
- PORST is active/asserted when either PORST (input) or PORST (output) is active/asserted.
- PORST (input) active means that the reset is held active by external agents by pulling the PORST pin low. It is recommended to keep the PORST (input) asserted until all the external supplies are above their primary reset thresholds.
- PORST (output) active means that µC asserts the reset internally and drives the PORST pin low thus propagating the reset to external devices. The PORST (output) is asserted by the µC when at least one among the three supply domains (VDD, VDDP3 or VEXT) violate their primary under-voltage reset thresholds.The PORST (output) is de-asserted by the µC when all supplies are above their primary reset thresholds and the basic supply and clock infrastructure is available. During reset release at T3, the load jump of upto 150 mA (dIDD) is expected.
- The power sequence as shown in **Figure 3-6** is enumerated below
  - T1 up to T3 refers to the period in time when basic supply and clock infrastructure components are available as the external supply ramps up. The bandgap and internal clock sources are started. The supply mode is evaluated based on the HWCFG[2:1,4,5,6] and TESTMODE pins. T1 up to T2 refers to the period in time when basic supply and clock infrastructure components are available as the external supply ramps up. The bandgap and internal clock sources are started .The supply mode is evaluated based on the HWCFG[2:1,6] pins. These events are initiated after LVD reset release at T1. LVD reset is released the both input voltages VEXT and VEVRSB are above VLVDRST5 and VLVDRSTSB levels correspondingly. Internal pre-regulator VDDPD output voltage is above VLVDRSTC level.
  - T3 refers to the point in time when all supplies are above their primary reset thresholds denoted by VRST5, VRST33 and VRSTC supply voltage levels. PORST (output) is de-asserted and HWCFG[3:5] pins are latched on PORST rising edge by SCU. Firmware execution is initiated.
  - T4 refers to the point in time when Firmware execution is completed and User code execution starts with CPU0 at a default frequency of 100 MHz. The time between T0 and T4 is documented as tBP (datasheet parameter).
  - T5 refers to the point in time during the ramp-down phase when at least one of the externally provided supplies (VDD, VDDP3 or VEXT) drop below their respective primary under-voltage reset thresholds.

Downloaded by IFXDMZ|par-zengzhe 12/02/2019 11:04:31

3.14 Reset Timing

Table 3-30 Reset

Parameter	Symbol	Values			Unit	Note / Test Condition
		Min.	Typ.	Max.		
Application Reset Boot Time	t_B CC	-	-	400	µs	operating with max. frequencies, with valid BMI header
System Reset Boot Time	t_{BS} CC	-	-	1.1	ms	RAM initialization and HSM boot time are not included, with valid BMI header
Cold Power on Reset Boot Time [1]	t_{BP} CC	-	-	3.1	ms	$dVEXT/dT$=1V/ms. $VEXT$>$VLVDRST5$. Boot time after Cold PORST including EVR ramp-up and Firmware execution time; RAM initialization and HSM boot time are not included.
		-	-	1.6	ms	Firmware execution time after PORST release without EVR ramp-up; RAM initialization and HSM boot time is not included
Minimum cold PORST reset hold time incase of power fail event issued by EVR primary monitors	t_{EVRPOR} CC	10 [2]	-	-	µs	
PMS Infrastructure, EVRC and EVR33 overall start-up time till cold PORST reset release	$t_{EVRstartup}$ CC	-	-	1	ms	dV/dT=1V/ms. EVRC and EVR33 active
Minimum PORST active hold time externally after power supplies are stable at operating levels after start-up	t_{POA} SR	1 [3]	-	-	ms	
Configurable PORST digital filter delay in addition to analog pad filter delay	$t_{PORSTDF}$ CC	600	-	1200	ns	
Warm Reset Sequencing Delay	$t_{WARMRSTSEQ}$ CC	-	-	180	µs	
HWCFG pins hold time from ESR0 rising edge	t_{HDH} CC	16 / f_{SPB}	-	-	ns	

Downloaded by IFXDMZ|par-zengzhe 12/02/2019 11:04:31

Table 3-30 Reset (cont'd)

Parameter	Symbol	Values			Unit	Note / Test Condition
		Min.	Typ.	Max.		
HWCFG pins setup time to ESR0 rising edge	t_{HDS} CC	0	-	-	ns	
Ports inactive after ESR0 reset active	t_{PI} CC	-	-	$8/f_{SPB}$	ns	
Ports inactive after PORST reset active	t_{PIP} CC	-	-	150	ns	
Hold time from PORST rising edge	t_{POH} SR	150	-	-	ns	
Setup time to PORST rising edge	t_{POS} SR	0	-	-	ns	
Warm PORST reset boot time	t_{BWP} CC	-	-	1.5	ms	without RAM initalization
LBIST execution time extending the boot time	t_{LBIST} CC	-	-	6	ms	LBIST Configuration A; 1.2V ≤ V_{DD}
SCR reset boot time	t_{SCR} CC	-	-	5	µs	User Mode 0
		-	-	16	µs	User Mode 1
		-	13.3	-	µs	WDT double bit ECC, soft reset
Minimum external supplies hold time after warm reset assertion	$t_{SUPHOLD}$ CC	-	-	250	µs	external supplies are V_{EVRSB}, V_{EXT}, V_{FLEX}, V_{EBU}, V_{DDM}, V_{DDP3} and V_{DD}

1) RAM initialization add 500µs in addition.
2) Cold PORST reset is driven by uC and maintained in an extended voltage range between VDDPPA limit and absolute maximum rating voltage limits.
3) The reset release on supply ramp-up or supply restoration is delayed by a voltage hysteresis of 1.5% (default value) above the undervoltage reset limit implemented on VEXT, VDDP3 and VDD rails. This mechanism helps to avoid multiple consecutive cold PORST events during slow supply ramp-ups owing to voltage drop/current jumps when reset is released.

Downloaded by IFXDMZlpar-zengzhe 12/02/2019 11:04:31

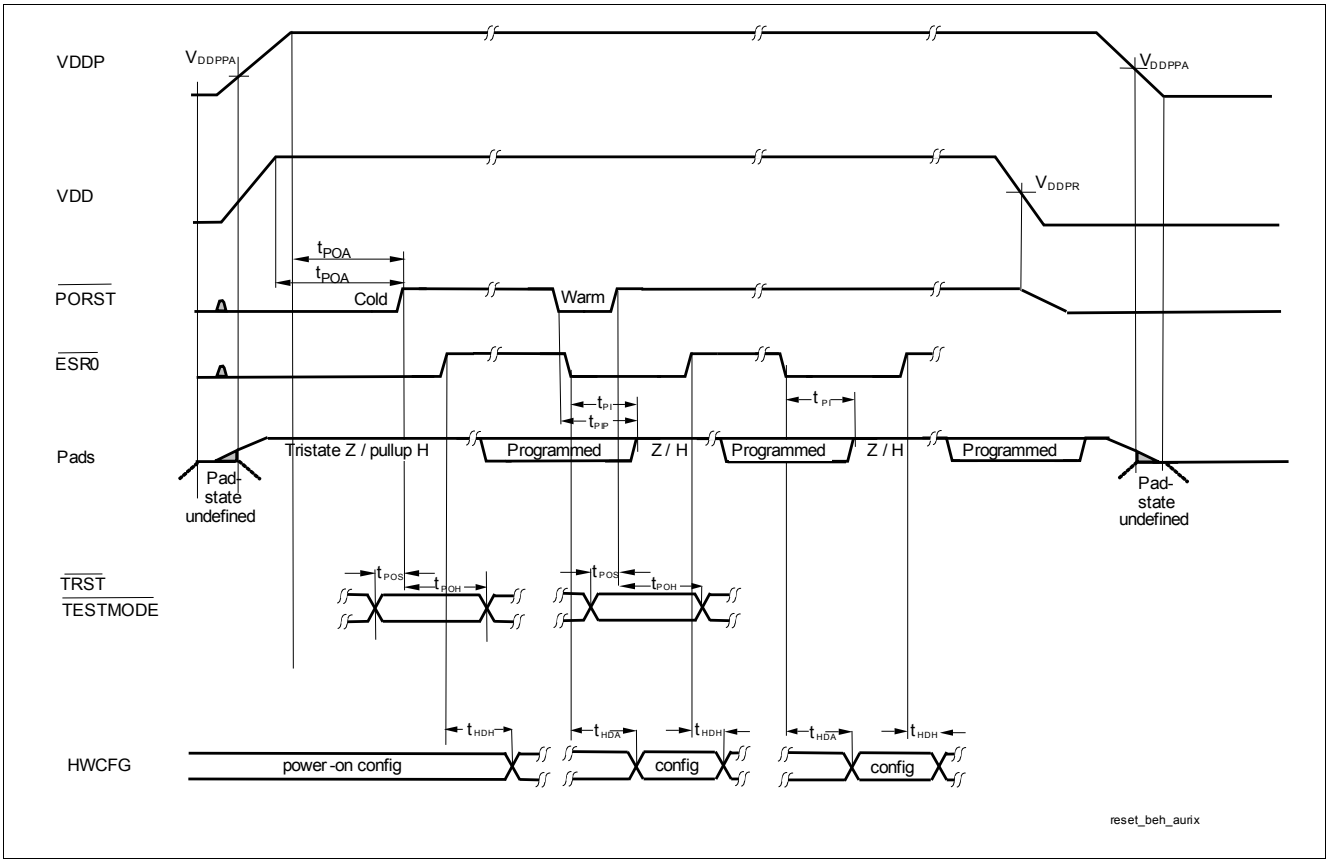

Figure 3-7 Power, Pad and Reset Timing

Downloaded by IFXDMZ|par-zengzhe 12/02/2019 11:04:31

3.15 EVR

Table 3-31 EVR33 LDO

Parameter	Symbol	Values			Unit	Note / Test Condition
		Min.	Typ.	Max.		
Input voltage range	V_{IN} SR	3.60 [1]	-	5.50	V	Normal RUN mode
		2.97 [2]	-	5.50	V	Low voltage cranking mode
Output voltage operational range including load/line regulation and aging [3]	V_{OUT} CC	2.97	3.3	3.63	V	Normal RUN mode
		2.60	3.3	3.63	V	Low voltage cranking mode; I_{DDP3}=50mA
Output V_{DDx3} static voltage accuracy after trimming and aging without dynamic load/line regulation.	V_{OUTT} CC	3.225	3.3	3.375	V	Normal RUN mode
		2.78	3.3	3.375	V	Low voltage cranking mode; I_{DDP3}=50mA
Output buffer capacitance on V_{OUT}	C_{OUT} SR	1.45	2.2	3	µF	
Output buffer capacitor ESR	C_{OUTESR} SR	-	-	100 [4]	mOhm	f > 0.5MHz; f < 10MHz
Maximum output current of the regulator	I_{MAX} CC	60 [5]	-	-	mA	Normal RUN mode
Startup time	t_{STR} CC	-	500	1000	µs	Normal RUN mode
External V_{IN} supply ramp [6]	$dVin/dt$ SR	-	1	-	V/ms	
Ripple on Output Voltage	ΔV_{OUTTC} CC	-	-	33	mV	V_{EXT} ≥ 2.97V ; V_{EXT} ≤ 5.5V ; I_{OUTTC} ≥ 10mA ; I_{OUTTC} ≤ 60mA; ΔV_{OUTTC} = (peak to peak ripple / 2)
Load step response [7]	$dVout/dIout$ CC	-165	-	-	mV	Normal RUN mode; dI=10 to 60mA; dt=20ns; $Tsettle$=20us
		-	-	165	mV	Normal RUN mode; dI=60 to 10mA; dt=20ns; $Tsettle$=20us
		-180	-	-	mV	Low voltage cranking mode; dI=10 to 50 mA; dt=20ns; $Tsettle$=20us
		-	-	180	mV	Low voltage cranking mode; dI=50 to 10mA; dt=20ns; $Tsettle$=20us

Downloaded by IFXDMZ|par-zengzhe 12/02/2019 11:04:31

Table 3-31 EVR33 LDO (cont'd)

Parameter	Symbol	Values			Unit	Note / Test Condition
		Min.	Typ.	Max.		
Line step response	$dVout/dVin$ CC	-	-	40	mV	$dVin/dT$=1V/ms; dV= 3.6 to 5V; I_{MAX}=60mA; ΔV_{OUTTC} is included
		-40	-	-	mV	$dVin/dT$=1V/ms; dV= 5 to 3.6V; I_{MAX}=60mA; ΔV_{OUTTC} is included
		-	-	280	mV	$dVin/dT$=50V/ms; dV= 3.6 to 5V; I_{MAX}=60mA
		-165	-	-	mV	$dVin/dT$=50V/ms; dV= 5 to 3.6V; I_{MAX}=60mA

1) A maximum pass device dropout voltage of 300mV is included in the minimum input voltage to ensure optimal pass device performance during normal operation.
2) VEXT Input voltage drop up to 2.97V leading to VDDP3 output voltage drop upto 2.6V can be tolerated if Flash is switched before to low performance mode.
3) No external inductive load permissible if EVR33 is used.
4) It is also recommended that the resistance of the supply trace from the pin to the EVR output capacitor is less than 100 mOhm. An additional decoupling capacitor of 100nF shall be located close to the pin before Cout.
5) IMAX is limited to 40 mA incase of Low voltage mode (cranking case) with on chip pass devices. In case EVR33 is not used, Injection current into 3.3V VDDP3 supply rail with active sink on 5V VEXT rail should be limited to 500 mA if during power sequencing 3.3V is supplied before 5V by external regulator.
6) EVR is robust against residual voltage ramp-up starting between 0 - 2.97 V. A VEXT voltage ramp range between 0.5V/min upto 120V/ms is covered in robustness validation. The generated voltage itself follows a soft ramp-up over the tSTR time to avoid overshoots.
7) Settling time is defined until output voltage is within +-1% of the mean(VOUTT) of the individual device.

Table 3-32 Supply Monitors

Parameter	Symbol	Values			Unit	Note / Test Condition
		Min.	Typ.	Max.		
Primary Undervoltage Reset threshold for V_{DDP3} before trimming [1]	V_{RST33} CC	-	-	3.00	V	by reset release before EVR trimming on supply ramp-up
Primary undervoltage reset threshold for V_{DD} before trimming	V_{RSTC} CC	-	-	1.138	V	by reset release before trimming on supply ramp-up including 2 LSB voltage Hysteresis
V_{EXT} primary undervoltage monitor accuracy after trimming [2]	$V_{EXTPRIUV}$ CC	2.86	2.92	2.97	V	V_{EXT} = Undervoltage cold PORST Primary Monitor Threshold
V_{DDP3} primary undervoltage monitor accuracy after trimming [2]	$V_{DDP3PRIUV}$ CC	2.86 [3]	2.90	2.97	V	VDDP3 = Undervoltage cold PORST Primary Monitor Threshold

Downloaded by IFXDMZlpar-zengzhe 12/02/2019 11:04:31

Table 3-32 Supply Monitors (cont'd)

Parameter	Symbol	Values			Unit	Note / Test Condition
		Min.	Typ.	Max.		
V_{DD} primary undervoltage monitor accuracy after trimming [2]	$V_{DDPRIUV}$ CC	1.08 [3]	1.105	1.125	V	VDD = Undervoltage cold PORST Primary Monitor Threshold
EVR primary monitor measurement latency for a new supply value	t_{PRIUV} CC	-	-	300	ns	The supply ramp / line jump slope is limited to 50V/ms for V_{EXT}, V_{DDP3} and V_{DD} rails.
V_{EXT}, V_{DDM} & V_{EVRSB} secondary supply monitor accuracy after trimming [4] [5]	V_{EXTMON} CC	3.2	3.3	3.4	V	SWDxxVAL, VDDMxxVAL & SBxxVAL monitoring threshold=3.3V=90h(OV,UV). EVRMONFILT.SWDFIL=1.
		4.5	4.6	4.7	V	SWDxxVAL, VDDMxxVAL & SBxxVAL monitoring threshold=4.6V=C8h(UV)/C9h(OV). EVRMONFILT.SWDFIL=1
		5.3	5.4	5.5	V	SWDxxVAL, VDDMxxVAL & SBxxVAL monitoring threshold=5.4V=EAh(UV)/ECh(OV). EVRMONFILT.SWDFIL=1
		4.9	5.0	5.1	V	SWDxxVAL, VDDMxxVAL & SBxxVAL monitoring threshold=5V=D9h(UV)/DAh(OV). EVRMONFILT.SWDFIL=1

Downloaded by IFXDMZ|par-zengzhe 12/02/2019 11:04:31

Table 3-32 Supply Monitors (cont'd)

Parameter	Symbol	Values			Unit	Note / Test Condition
		Min.	Typ.	Max.		
V_{DDP3} secondary supply monitor accuracy after trimming [5)]	$V_{DDP3MON}$ CC	2.97	3.035	3.1	V	EVR33xxVAL monitoring threshold=3.035V=CBh(UV)/CCh(OV). EVRMONFILT.EVR33FIL = 3.
		3.235	3.30	3.365	V	EVR33xxVAL monitoring threshold=3.3V=DDh(OV,UV). EVRMONFILT.EVR33FIL = 3.
		3.5	3.565	3.63	V	EVR33xxVAL monitoring threshold=3.565V=EEh(UV)/EFh(OV). EVRMONFILT.EVR33FIL = 3.
V_{DD} & V_{DDPD} secondary supply monitor accuracy after trimming [5)]	V_{DDMON} CC	1.125	1.15	1.175	V	EVRCxxVAL & PRExxVAL monitoring threshold=1.15V=C7h(UV)/C8h(OV). EVRMONFILT.EVRCFIL = 1.
		1.225	1.25	1.275	V	EVRCxxVAL & PRExxVAL monitoring threshold=1.25V=D9h(OV,UV). EVRMONFILT.EVRCFIL = 1.
		1.325	1.35	1.375	V	EVRCxxVAL & PRExxVAL monitoring threshold=1.35V=EAh(UV)/EBh(OV). EVRMONFILT.EVRCFIL = 1.
V_{EXT} LVD Primary undervoltage reset Monitor threshold	$V_{LVDRST5}$ CC	2.3	-	2.72	V	Power-down
		2.4	-	2.75	V	Power-up
V_{EVRSB} LVD Primary undervoltage reset Monitor threshold	$V_{LVDRSTSB}$ CC	2.18	-	2.47	V	Power-down
		2.21	-	2.5	V	Power-up
V_{EXT} and V_{EVRSB} PBIST primary overvoltage Monitor threshold	V_{PBIST5} CC	5.63	-	-	V	

Downloaded by IFXDMZ|par-zengzhe 12/02/2019 11:04:31

Table 3-32 Supply Monitors (cont'd)

Parameter	Symbol	Values			Unit	Note / Test Condition
		Min.	Typ.	Max.		
Primary undervoltage reset threshold for V_{EXT} before trimming	V_{RST5} CC	-	-	3.0	V	by last cold PORST release on supply ramp-up including voltage hysteresis.
EVR secondary monitor measurement latency for all 6 supply rails	t_{MON} CC	-	-	3.2	µs	HPOSC and SHPBG bandgap trimmed. Filter inactive.

1) The reset release on supply ramp-up is delayed by a time duration 20-40 us after reaching undervoltage reset threshold and by a voltage hysteresis of 1.5% above the undervoltage reset limit. These mechanisms serve as hysteresis to avoid multiple consecutive cold PORST events during slow supply ramp-ups owing to voltage drop/current jumps when reset is released. The reset limit of 2,97V at pin is for the case with 3.3V generated internally from EVR33. In case the 3.3V supply is provided externally, the bondwire drop will cause a reset at a higher voltage of 3.0V at the VDDP3 pin.
2) The monitor tolerances constitute the inherent variation of the band gap and ADC over process, voltage and temperature operational ranges. The VxxPRIUV parameters are device individually tested in production with +-1% tolerance about the VxxPRIUV limits. All voltages are measured on pins.
3) VRSTxx parameters are relevant only for the first cold PORST release. Later the reset levels are trimmed by the Firmware and reflected as VxxPRIUV parameters before device is used with full performance. The cold PORST is released with a voltage hysteresis on all the primary monitors to avoid consecutive PORST toggling behavior.
4) In case the application is using 3.3V single supply (Single Supply mode (e), i.e. VEXT and VDDP3 are shorted together), it is recommended to use secondary supply monitoring on channel VDDP3, because of the better accuracy of parameter VDDP3MON.
5) To monitor voltage level not provided in conditions the values for OV and UV thresholds can be generated by a linear interpolation or extrapolation based on the given points.

Table 3-33 Supply Ramp

Parameter	Symbol	Values			Unit	Note / Test Condition
		Min.	Typ.	Max.		
External V_{EXT} & V_{EVRSB} supply ramp-up and ramp-down slope 1) 2) 3)	*dVEXT/dt* SR	8.3E-6	1	100	V/ms	
External V_{DDP3} supply ramp-up and ramp-down slope 1)3)	*dVDDP3/dt* SR	8.3E-6	1	100	V/ms	
External V_{DD} supply ramp-up and ramp-down slope 1)3)	*dVDD/dt* SR	8.3E-6	1	100	V/ms	
External V_{DDM} supply ramp-up and ramp-down slope 1)3)	*dVDDM/dt* SR	8.3E-6	1	100	V/ms	

1) The device is robust against residual voltage ramp-up starting between 0 - 2.97 V for VEXT, VEVRSB, VDDP3 and VDDM and 0-1 V for VDD. A voltage ramp range between 0.5V/min upto 120V/ms is covered in robustness validation.
2) Also valid incase EVR33 or EVRC is used. The generated voltage itself follows a soft ramp-up over the tSTR time to avoid overshoots.
3) The slope is defined as the maximal tangential slope between 0% to 100% voltage level. Actual waveform may not represent the specification.

Downloaded by IFXDMZ|par-zengzhe 12/02/2019 11:04:31

Table 3-34 EVRC SMPS

Parameter	Symbol	Values			Unit	Note / Test Condition
		Min.	Typ.	Max.		
Input V_{EXT} Voltage range	V_{IN} SR	2.97	-	5.5	V	Start-up VEXT voltage > 2.6 V
SMPS regulator output voltage range including load/line regulation and aging	V_{DDDC} CC	1.125	-	1.375	V	$V_{EXT} \geq 2.97V$; $V_{EXT} \leq 5.5V$; $I_{DDDC} \geq 1mA$; $I_{DDDC} \leq 1.5A$; untrimmed
SMPS regulator static voltage output accuracy after trimming without dynamic load/line regulation.	V_{DDDCT} CC	1.225	1.25	1.275	V	$V_{EXT} \geq 2.97V$; $V_{EXT} \leq 5.5V$; $I_{DDDC} \geq 1mA$; $I_{DDDC} \leq 1.5A$
Programmable switching frequency	f_{DCDC} SR	1.6	1.82	2.0	MHz	Start-up frequency switches from 500 KHz in open loop operation to 1.82 MHz in closed loop Operation.
		-	0.8	-	MHz	Start-up frequency switches from 500 KHz in open loop operation to 1.82 MHz in closed loop Operation. 0.8 MHz to be set in SW.
Startup time	t_{STRDC} CC	-	-	900	µs	SMPS Start-up Mode. It is is defined beween $V_{EXTPRIUV}$ reset threshold till PORST release, on condition that all other PORST requirements were released before. I_{START} < 700mA.
Switching frequency modulation spread	Δf_{DCSPR} SR	-	1.8%	-	MHz	
Maximum ripple at I_{MAX}	ΔV_{DDDC} CC	-	-	16	mV	$V_{EXT} \geq 2.97V$; $V_{EXT} \leq 5.5V$; $I_{DDDC} \geq 300mA$; $I_{DDDC} \leq 1.5A$; ΔV_{DDDC} = (Peak to Peak ripple / 2)
No load current consumption of SMPS regulator	I_{DCNL} CC	-	15	19	mA	f_{DCDC}=1.82MHz; I_{DDDC}=I_{SLEEP}; V_{EXT} > 2.97 V; T_J=25°C
		-	5	-	mA	LPM mode; I_{DDDC}=I_{SLEEP}; V_{EXT} > 2.97 V; T_J=25°C

Downloaded by IFXDMZlpar-zengzhe 12/02/2019 11:04:31

Table 3-34 EVRC SMPS (cont'd)

Parameter	Symbol	Values			Unit	Note / Test Condition
		Min.	Typ.	Max.		
SMPS regulator load transient response	dV_{DDDCT} / dI_{OUT} CC	-50	-	87	mV	dI < -450mA ; I_{DDDC}=500-1500mA; t_r=0.1us; t_f=0.1us; V_{DDDC}=1.25V; T_{settle}=100 us
		-100	-	145	mV	dI < -700mA ; I_{DDDC}=750-1500mA; t_r=0.1us; t_f=0.1us; V_{DDDC}=1.25V; T_{settle}=100 us
		-26	-	26	mV	dI < 100mA ; I_{DDDC}=50-1500mA; t_r=0.1us; t_f=0.1us; V_{DDDC}=1.25V; T_{settle}=20us;
Maximum output current	I_{MAX} CC	100	-	-	mA	LPM mode. Typical current in LPM Mode = I_{SLEEP}
		1.5	-	-	A	limited by thermal constraints and component choice
SMPS regulator line transient response	dV_{DDDCT} / dV_{IN} CC	-75	-	75	mV	dV/dT=120V/ms; dV < 2.97 - 5.5V ; I_{DDDC}=50-1500mA;
		-12.5	-	12.5	mV	dV/dT=1V/ms; dV < 2.97 - 5.5V ; I_{DDDC}=50-1500mA;
SMPS regulator efficiency	n_{DC} SR	-	80	-	%	V_{IN}=3.3V; I_{DDDC}=1500mA; f_{DCDC}=1.82MHz
		-	75	-	%	V_{IN}=5V; I_{DDDC}=1500mA; f_{DCDC}=1.82MHz
Input Synchronisation frequency	$f_{DCDCSYNC}$ SR	1.6	1.82	2.0	MHz	

Table 3-35 EVRC SMPS External components

Parameter	Symbol	Values			Unit	Note / Test Condition
		Min.	Typ.	Max.		
External output capacitor value [1)]	C_{OUT} SR	20.8	32	43.2	µF	I_{DDDC}=1.5A; f_{DDDC} = 0.8MHz
		15.4	22	29.7	µF	I_{DDDC}=1.5A; f_{DDDC} = 1.82MHz

Downloaded by IFXDMZ|par-zengzhe 12/02/2019 11:04:31

Table 3-35 EVRC SMPS External components (cont'd)

Parameter	Symbol	Values			Unit	Note / Test Condition
		Min.	Typ.	Max.		
External output capacitor ESR	C_{OUT_ESR} SR	-	-	50	mOhm	f≥0.5MHz ; f≤10MHz
		-	-	100	Ohm	f=10Hz
External input capacitor value [1)]	C_{IN} SR	6.5	10	13.5	µF	I_{DDDC}=1.5A
External input capacitor ESR	C_{IN_ESR} SR	-	-	50	mOhm	f≥0.5MHz ; f≤10MHz
		-	-	100	Ohm	f=100Hz
External inductor value	L_{DC} SR	3.29	4.7	6.11		f_{DCDC}=0.8MHz
		2.31	3.3	4.29	µH	f_{DCDC}=1.82MHz
External inductor DCR	L_{DC_DCR} SR	-	-	0.2	Ohm	
P + N-channel MOSFET logic level	V_{LL} SR	-	-	2.5	V	
P + N-channel MOSFET drain source breakdown voltage	$\|V_{BR_DS}\|$ SR	+7	-	-	V	NMOS - V_{GS} = 0.
		-	-	-7	V	PMOS - V_{GS} = 0.
P + N-channel MOSFET drain source ON-state resistance	R_{ON} SR	-	-	150	mOhm	I_{DDDC}=1.5A; $\|V_{GS\|}$=2.5V ; T_A=25°C
P + N-channel MOSFET Gate Charge	Q_G SR	-	-	8	nC	I_{DDDC}=1.5A; NMOS- $\|V_{GS\|}$=5V; 1.5A pulsed drain current
		-8	-	-	nC	I_{DDDC}=1.5A; PMOS- $\|V_{GS\|}$=5V; 1.5A pulsed drain current
External Inductor Saturation Current Margin	ΔI_{SAT} SR	400	-	-	mA	The saturation current of the coil must be larger than I_{DDDC} + ΔI_{SAT}
P + N-channel MOSFET Gate threshold voltage	V_{GSTH} SR	-	1	-	V	NMOS
		-	-1	-	V	PMOS
N-channel MOSFET reverse diode forward voltage	V_{RDN} SR	-	0.8	-	V	

1) Capacitor min-max range represent typical +-35% tolerance including DC bias effect. The trace resistance from the capacitor to the supply or ground rail should be limited to 25 mOhm.

Downloaded by IFXDMZ|par-zengzhe 12/02/2019 11:04:31

3.16 System Phase Locked Loop (SYS_PLL)

Table 3-36 PLL System

Parameter	Symbol	Values			Unit	Note / Test Condition
		Min.	Typ.	Max.		
DCO Input frequency range	f_{REF} CC	16	-	40	MHz	
Modulation Amplitude	MA CC	0	-	2	%	
Peak Period jitter	DP CC	-200	-	200	ps	without modulation (PLL output frequency)
Peak Accumulated Jitter	D_{PP} CC	-5	-	5	ns	without modulation
Total long term jitter	J_{TOT} CC	-	-	11.5	ns	including modulation; MA 1.25%; f_{REF} 20MHz
System frequency deviation	f_{SYSD} CC	-	-	0.01	%	with active modulation
DCO frequency range	f_{DCO} CC	400	-	800	MHz	
PLL lock-in time	t_L CC	4	-	100	µs	

Note: The specified PLL jitter values are valid if the capacitive load per pin does not exceed C_L = 20 pF with the maximum driver and sharp edge.

Note: The maximum peak-to-peak noise on the power supply voltage, is limited to a peak-to-peak voltage of V_{PP} = 100 mV for noise frequencies below 300 KHz and V_{PP} = 40 mV for noise frequencies above 300 KHz. These conditions can be achieved by appropriate blocking of the supply voltage as near as possible to the supply pins and using PCB supply and ground planes.

Downloaded by IFXDMZ|par-zengzhe 12/02/2019 11:04:31

3.17 Peripheral Phase Locked Loop (PER_PLL)

Table 3-37 PLL Peripheral

Parameter	Symbol	Values			Unit	Note / Test Condition
		Min.	Typ.	Max.		
Peak Accumulated jitter at SYSCLK pin	D_{PP} CC	-1000	-	1000	ps	Peak only
Peak accumulated jitter	D_{PPI} CC	-700	-	700	ps	Peak only
RMS Accumulated jitter	D_{RMS} CC	-100	-	100	ps	measured over 1 µs; f_{REF} = 20 MHz and f_{DCO} = 640 MHz or f_{REF} = 25 MHz and f_{DCO} = 800 MHz
Peak Period jitter	DP CC	-200	-	200	ps	f_{DCO} = 640 MHz or f_{DCO} = 800 MHz
Absolute RMS jitter (PLL out)	J_{ABS10} CC	-125	-	125	ps	f_{REF} = 10 MHz; f_{DCO} = 640 MHz
Absolute RMS jitter (PLL out)	J_{ABS20} CC	-85	-	85	ps	f_{REF} = 20 MHz; f_{DCO} = 640 MHz
Absolute RMS jitter (PLL out)	J_{ABS25} CC	-85	-	85	ps	f_{REF} = 25 MHz; f_{DCO} = 800 MHz
DCO frequency range	f_{DCO} CC	400	-	800	MHz	
DCO input frequency range	f_{REF} CC	10	-	40	MHz	
PLL lock-in time	t_L CC	4	-	100	µs	

Note: The specified PLL jitter values are valid if the capacitive load per pin does not exceed C_L = 20 pF with the maximum driver and sharp edge.

Note: The maximum peak-to-peak noise on the power supply voltage, is limited to a peak-to-peak voltage of V_{PP} = 100 mV for noise frequencies below 300 KHz and V_{PP} = 40 mV for noise frequencies above 300 KHz. These conditions can be achieved by appropriate blocking of the supply voltage as near as possible to the supply pins and using PCB supply and ground planes.

Downloaded by IFXDMZ|par-zengzhe 12/02/2019 11:04:31

3.18 AC Specifications

All AC parameters are specified for the complete operating range defined in **Chapter 3.4** unless otherwise noted in column Note / Test Condition.

Unless otherwise noted in the figures the timings are defined with the following guidelines:

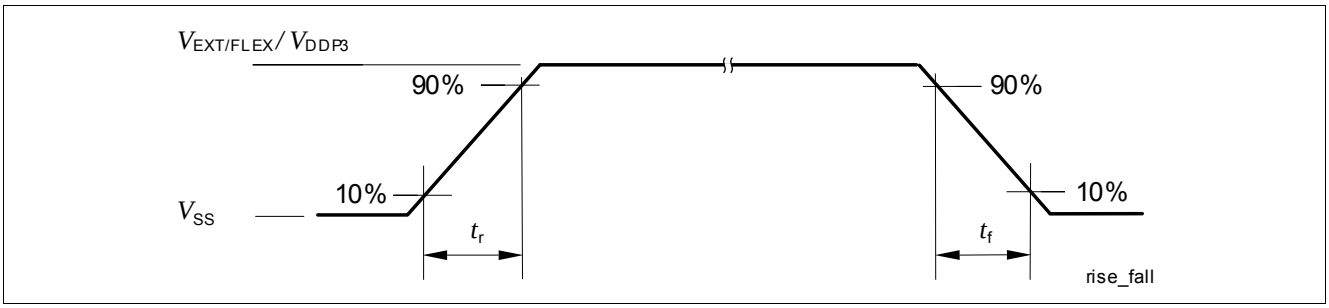

Figure 3-8 Definition of rise / fall times

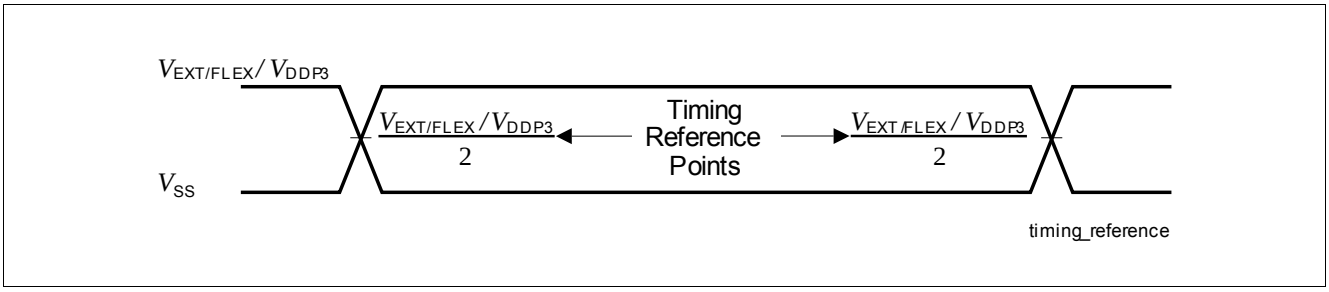

Figure 3-9 Time Reference Point Definition

Downloaded by IFXDMZlpar-zengzhe 12/02/2019 11:04:31

3.19 JTAG Parameters

The following parameters are applicable for communication through the JTAG debug interface. The JTAG module is fully compliant with IEEE1149.1-2000.

Table 3-38 JTAG

Parameter	Symbol	Values			Unit	Note / Test Condition
		Min.	Typ.	Max.		
TCK clock period	t_1 SR	50	-	-	ns	
TCK high time	t_2 SR	10	-	-	ns	
TCK low time	t_3 SR	10	-	-	ns	
TCK clock rise time	t_4 SR	-	-	4	ns	
TCK clock fall time	t_5 SR	-	-	4	ns	
TDI/TMS setup to TCK rising edge	t_6 SR	6.0	-	-	ns	
TDI/TMS hold after TCK rising edge	t_7 SR	6.0	-	-	ns	
TDO valid after TCK falling edge (propagation delay)	t_8 CC	3.0	-	-	ns	C_L≤20pF
		-	-	25	ns	C_L≤50pF
TDO hold after TCK falling edge	t_{18} CC	2	-	-	ns	
TDO high impedance to valid from TCK falling edge	t_9 CC	-	-	25	ns	C_L≤50pF
TDO valid output to high impedance from TCK falling edge	t_{10} CC	-	-	25	ns	C_L≤50pF

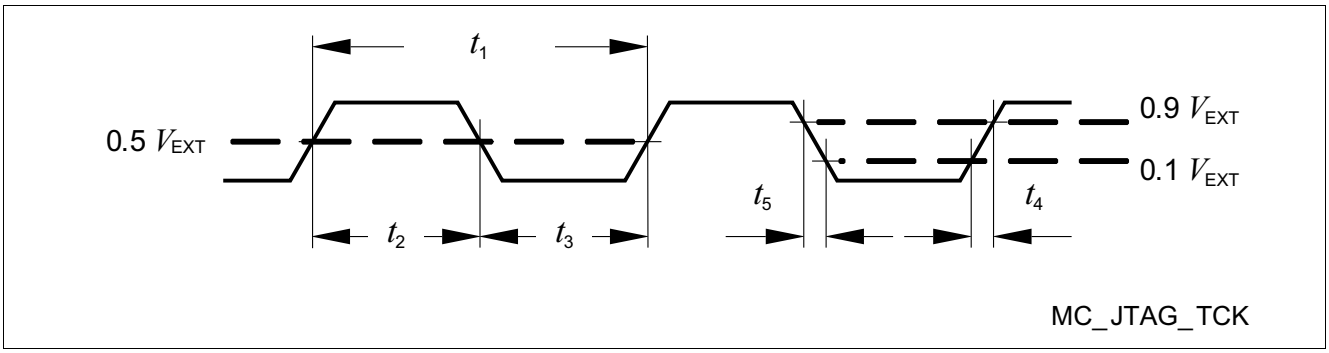

Figure 3-10 Test Clock Timing (TCK)

Downloaded by IFXDMZlpar-zengzhe 12/02/2019 11:04:31

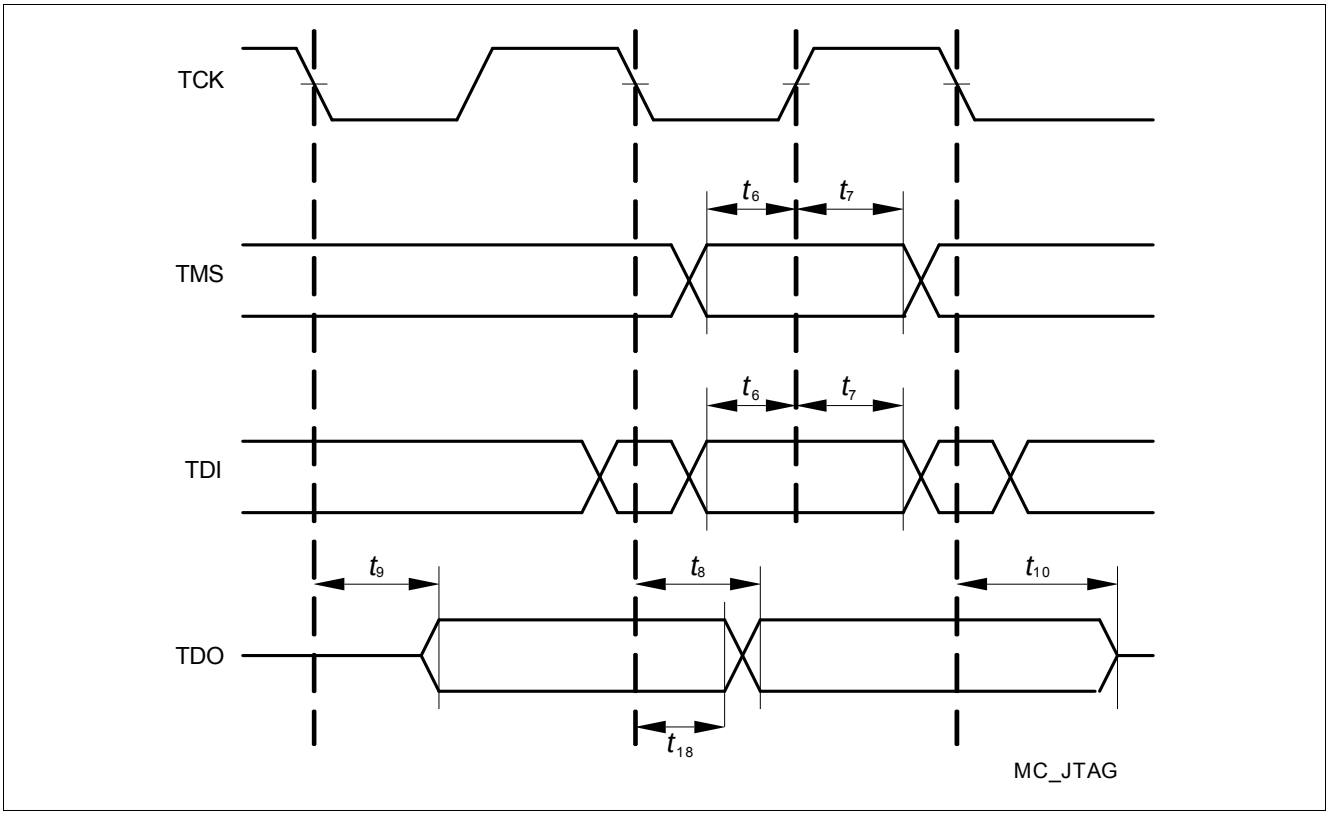

Figure 3-11 JTAG Timing

Downloaded by IFXDMZ|par-zengzhe 12/02/2019 11:04:31

3.20 DAP Parameters

The following parameters are applicable for communication through the DAP debug interface.

Table 3-39 DAP

Parameter	Symbol	Values			Unit	Note / Test Condition
		Min.	Typ.	Max.		
DAP0 clock rise time	t_{14} SR	-	-	1	ns	f=160MHz
		-	-	4	ns	f=40MHz
		-	-	2	ns	f=80MHz
DAP0 clock fall time	t_{15} SR	-	-	1	ns	f=160MHz
		-	-	4	ns	f=40MHz
		-	-	2	ns	f=80MHz
DAP1 setup to DAP0 rising edge	t_{16} SR	4	-	-	ns	
		5	-	-	ns	f=40MHz
DAP1 hold after DAP0 rising edge	t_{17} SR	2	-	-	ns	
DAP1 valid per DAP0 clock period	t_{19} CC	4	-	-	ns	C_L=20pF ; f=160MHz
		8	-	-	ns	C_L=20pF ; f=80MHz
		10	-	-	ns	C_L=50pF ; f=40MHz
DAP0 high time	t_{12} SR	2	-	-	ns	
DAP0 low time	t_{13} SR	2	-	-	ns	
DAP0 clock period	t_{11} SR	6.25	-	-	ns	

Table 3-40 SCR DAP

Parameter	Symbol	Values			Unit	Note / Test Condition
		Min.	Typ.	Max.		
DAP0 clock rise time	t_{14} SR	-	-	8	ns	f=20MHz
DAP0 clock fall time	t_{15} SR	-	-	8	ns	f=20MHz
DAP1 setup to DAP0 rising edge	t_{16} SR	10	-	-	ns	
DAP1 hold after DAP0 rising edge	t_{17} SR	10	-	-	ns	
DAP1 valid per DAP0 clock period	t_{19} CC	30	-	-	ns	C_L=20pF ; f=20MHz
DAP0 high time	t_{12} SR	15	-	-	ns	
DAP0 low time	t_{13} SR	15	-	-	ns	
DAP0 clock period	t_{11} SR	50	-	-	ns	

Downloaded by IFXDMZ|par-zengzhe 12/02/2019 11:04:31

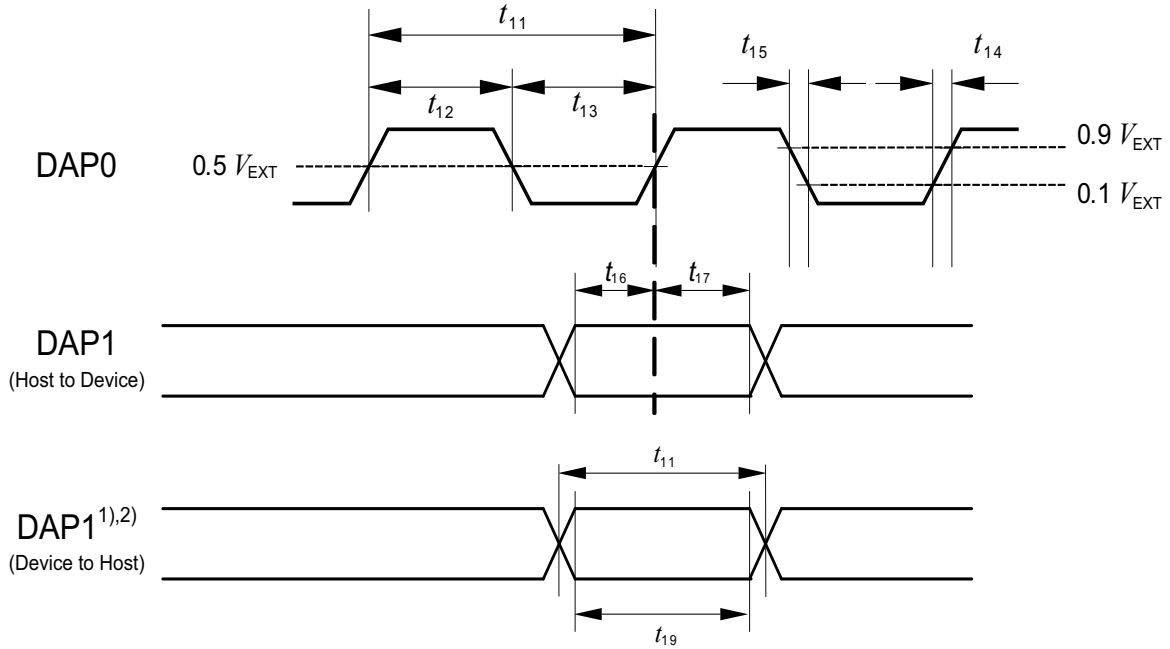

1) The DAP1 and DAP2 device to host timing is individual for both pins.
There is no guaranteed max. signal skew.

2) No explicite setup and hold times are given for DAP1 for the direction Device to Host.
Only t11 and t19 are guaranteed and the tool may set the sample point freely.

Figure 3-12 DAP Timing

Note: The DAP1 and DAP2 device to host timing is individual for both pins. There is no guaranteed max. signal skew.

Downloaded by IFXDMZ|par-zengzhe 12/02/2019 11:04:31

3.21 ASCLIN SPI Master Timing

This section defines the timings for the ASCLIN in the TC39x.

Note: Pad asymmetry is already included in the following timings.

Table 3-41 Master Mode strong sharp (ss) output pads

Parameter	Symbol	Values			Unit	Note / Test Condition
		Min.	Typ.	Max.		
ASCLKO clock period	t_{50} CC	20	-	-	ns	C_L=25pF
Deviation from ideal duty cycle	t_{500} CC	-2	-	2	ns	C_L=25pF
MTSR delay from ASCLKO shifting edge	t_{51} CC	-3.5	-	3.5	ns	C_L=25pF
ASLSOn delay from the first ASCLKO edge	t_{510} CC	-3	-	3.5	ns	C_L=25pF
MRST setup to ASCLKO latching edge	t_{52} SR	25	-	-	ns	C_L=25pF
MRST hold from ASCLKO latching edge	t_{53} SR	-2	-	-	ns	C_L=25pF

Table 3-42 Master Mode strong medium (sm) output pads

Parameter	Symbol	Values			Unit	Note / Test Condition
		Min.	Typ.	Max.		
ASCLKO clock period	t_{50} CC	50	-	-	ns	C_L=50pF
Deviation from ideal duty cycle	t_{500} CC	-5	-	5	ns	C_L=50pF
MTSR delay from ASCLKO shifting edge	t_{51} CC	-7	-	7	ns	C_L=50pF
ASLSOn delay from the first ASCLKO edge	t_{510} CC	-7	-	7	ns	C_L=50pF
MRST setup to ASCLKO latching edge	t_{52} SR	35	-	-	ns	C_L=50pF
MRST hold from ASCLKO latching edge	t_{53} SR	-5	-	-	ns	C_L=50pF

Table 3-43 Master Mode medium (m) output pads

Parameter	Symbol	Values			Unit	Note / Test Condition
		Min.	Typ.	Max.		
ASCLKO clock period	t_{50} CC	160	-	-	ns	C_L=50pF
Deviation from ideal duty cycle	t_{500} CC	-10	-	10	ns	C_L=50pF
MTSR delay from ASCLKO shifting edge	t_{51} CC	-20	-	20	ns	C_L=50pF
ASLSOn delay from the first ASCLKO edge	t_{510} CC	-20	-	20	ns	C_L=50pF

Downloaded by IFXDMZ|par-zengzhe 12/02/2019 11:04:31

Table 3-43 Master Mode medium (m) output pads (cont'd)

Parameter	Symbol	Values			Unit	Note / Test Condition
		Min.	Typ.	Max.		
MRST setup to ASCLKO latching edge	t_{52} SR	80	-	-	ns	C_L=50pF
MRST hold from ASCLKO latching edge	t_{53} SR	-15	-	-	ns	C_L=50pF

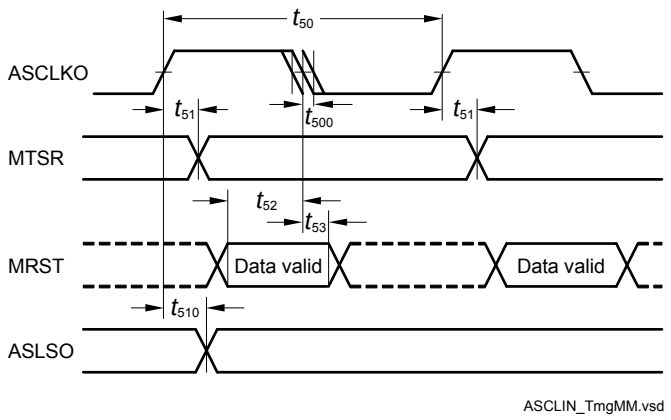

Figure 3-13 ASCLIN SPI Master Timing

Downloaded by IFXDMZ|par-zengzhe 12/02/2019 11:04:31

3.22 QSPI Timings, Master and Slave Mode

This section defines the timings for the QSPI in the TC39x.
It is assumed that SCLKO, MTSR, and SLSO pads have the same pad settings:

Note: Pad asymmetry is already included in the following timings.

Table 3-44 Master Mode Timing, LVDS output pads for data and clock

Parameter	Symbol	Values			Unit	Note / Test Condition
		Min.	Typ.	Max.		
SCLKO clock period	t_{50} CC	20 [1]	-	-	ns	CL=25pF
Deviation from the ideal duty cycle	t_{500} CC	-1 [1]	-	1 [1]	ns	CL=25pF
MTSR delay from SCLKO shifting edge	t_{51} CC	-3 [1]	-	4 [1]	ns	CL=25pF
SLSOn deviation from the ideal programmed position	t_{510} CC	-4 [1]	-	5.5 [1]	ns	C_L=25pF, driver strength ss
		-10 [1]	-	10 [1]	ns	C_L=25pF, driver strength sm
		-30 [1]	-	30 [1]	ns	C_L=25pF, driver strength m
MRST setup to SCLK latching edge	t_{52} SR	18 [1]	-	-	ns	CL=25pF; valid for LVDS Input pads of QSPI2 only
		19.5 [1]	-	-	ns	CL=25pF; valid for LVDS Input pads of QSPI4 only
MRST hold from SCLK latching edge	t_{53} SR	-1 [1]	-	-	ns	CL=25pF; valid for LVDS Input pads only

1) The load (C_L=25pF) defined in the condition list is a load definition for the single end signal SLSO and does not intend to add an additional load inside the differential signal lines. For single end signals the load definition defines the max length of the signal on the PCB layout. For the LVDS pads the IEEE Std 1596.3-1996 load definitions apply.

Table 3-45 Master Mode Strong Sharp (ss) output pads

Parameter	Symbol	Values			Unit	Note / Test Condition
		Min.	Typ.	Max.		
SCLKO clock period	t_{50} CC	50	-	-	ns	CL=25pF
Deviation from the ideal duty cycle	t_{500} CC	-2	-	2	ns	CL=25pF
MTSR delay from SCLKO shifting edge	t_{51} CC	-4	-	5	ns	CL=25pF
SLSOn deviation from the ideal programmed position	t_{510} CC	-4	-	5	ns	CL=25pF
MRST setup to SCLK latching edge	t_{52} SR	25 [1] [2]	-	-	ns	CL=25pF
MRST hold from SCLK latching edge	t_{53} SR	-2 [1][2]	-	-	ns	CL=25pF

Downloaded by IFXDMZ|par-zengzhe 12/02/2019 11:04:31

1) For compensation of the average on-chip delay the QSPI module provides the bit fields ECONz.A, B and C.
2) The setup and hold times are valid for both settings of the input pads thresholds: TTL and AL.

Table 3-46 Master Mode Strong Medium (sm) output pads

Parameter	Symbol	Values			Unit	Note / Test Condition
		Min.	Typ.	Max.		
SCLKO clock period	t_{50} CC	50	-	-	ns	CL=50pF
Deviation from the ideal duty cycle	t_{500} CC	-5	-	5	ns	CL=50pF
MTSR delay from SCLKO shifting edge	t_{51} CC	-7	-	7	ns	CL=50pF
SLSOn deviation from the ideal programmed position	t_{510} CC	-7	-	7	ns	CL=50pF
MRST setup to SCLK latching edge	t_{52} SR	35 [1) 2)]	-	-	ns	CL=50pF
MRST hold from SCLK latching edge	t_{53} SR	-5 [1)2)]	-	-	ns	CL=50pF

1) For compensation of the average on-chip delay the QSPI module provides the bit fields ECONz.A, B and C.
2) The setup and hold times are valid for both settings of the input pads thresholds: TTL and AL.

Table 3-47 Master Mode Medium (m) output pads

Parameter	Symbol	Values			Unit	Note / Test Condition
		Min.	Typ.	Max.		
SCLKO clock period	t_{50} CC	160	-	-	ns	CL=50pF
Deviation from the ideal duty cycle	t_{500} CC	-10	-	10	ns	CL=50pF
MTSR delay from SCLKO shifting edge	t_{51} CC	-20	-	20	ns	CL=50pF
SLSOn deviation from the ideal programmed position	t_{510} CC	-20	-	20	ns	CL=50pF
MRST setup to SCLK latching edge	t_{52} SR	80 [1) 2)]	-	-	ns	CL=50pF
MRST hold from SCLK latching edge	t_{53} SR	-15 [1)2)]	-	-	ns	CL=50pF
		-13 [1)2)]	-	-	ns	CL=50pF; SCR SSC

1) For compensation of the average on-chip delay the QSPI module provides the bit fields ECONz.A, B and C.
2) The setup and hold times are valid for both settings of the input pads thresholds: TTL and AL.

Table 3-48 Slave mode timing

Parameter	Symbol	Values			Unit	Note / Test Condition
		Min.	Typ.	Max.		
SCLK clock period	t_{54} SR	4 x T_{MAX}	-	-	ns	
SCLK duty cycle	$t_{55/t54}$ SR	40	-	60	%	

Downloaded by IFXDMZ|par-zengzhe 12/02/2019 11:04:31

Table 3-48 Slave mode timing (cont'd)

Parameter	Symbol	Values			Unit	Note / Test Condition
		Min.	Typ.	Max.		
MTSR setup to SCLK latching edge	t_{56} SR	6	-	-	ns	Input Level AL
		6	-	-	ns	Input Level TTL
MTSR hold from SCLK latching edge	t_{57} SR	4	-	-	ns	Input Level AL
		6	-	-	ns	Input Level TTL
SLSI setup to first SCLK shift edge	t_{58} SR	4	-	-	ns	Input Level AL
		6	-	-	ns	Input Level TTL
SLSI hold from last SCLK latching edge	t_{59} SR	3	-	-	ns	Input Level AL
		6	-	-	ns	Input Level TTL
MRST delay from SCLK shift edge	t_{60} CC	5	-	35	ns	driver = strong edge = medium ; C_L=50pF
		2	-	24	ns	driver = strong edge = sharp ; C_L=50pF
		15	-	80	ns	medium driver ; C_L=50pF
		14	-	-	ns	medium driver ; C_L=50pF; SCR SSC

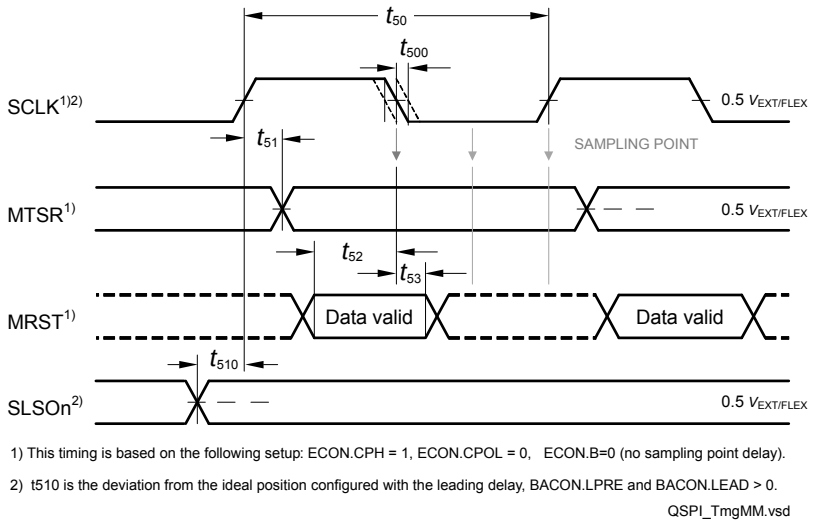

1) This timing is based on the following setup: ECON.CPH = 1, ECON.CPOL = 0, ECON.B=0 (no sampling point delay).

2) t510 is the deviation from the ideal position configured with the leading delay, BACON.LPRE and BACON.LEAD > 0.

QSPI_TmgMM.vsd

Figure 3-14 Master Mode Timing

Downloaded by IFXDMZ|par-zengzhe 12/02/2019 11:04:31

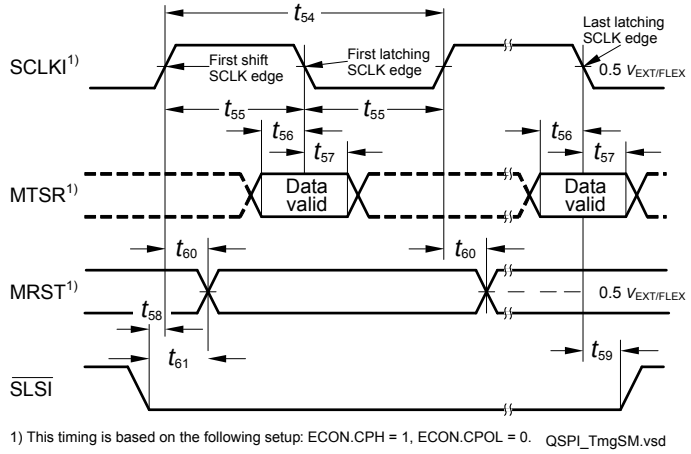

Figure 3-15 Slave Mode Timing

Downloaded by IFXDMZ|par-zengzhe 12/02/2019 11:04:31

3.23 MSC Timing 5 V Operation

The following section defines the timings.

Note: Pad asymmetry is already included in the following timings.

Note: Load for LVDS pads are defined as differential loads in the following timings.

Table 3-49 LVDS clock/data (LVDS pads in LVDS mode) valid for 5V

Parameter	Symbol	Values			Unit	Note / Test Condition
		Min.	Typ.	Max.		
FCLPx clock period	t_{40} CC	2 * T_A [1) 2) 3)]	-	-	ns	LVDS; C_L=50pF
Deviation from ideal duty cycle	t_{400} CC	-1 [3)]	-	1 [3)]	ns	LVDS; 0 < C_L < 50pF
SOPx output delay	t_{44} CC	-3 [3)]	-	3 [3)]	ns	CL=50pF
ENx output delay	t_{45} CC	-4 [3)]	-	5 [3)]	ns	ss; C_L=50pF; ABRA block bypassed
		-4 [3)]	-	4 [3)]	ns	ss; C_L=50pF; ABRA block used
		-2 [3)]	-	10 [3)]	ns	sm; C_L=50pF
		-30 [3)]	-	30 [3)]	ns	m; C_L=50pF

1) T_A depends on the clock source selected for baud rate generation in the ABRA block of the MSC.
2) The capacitive load on the LVDS pins is differential, the capacitive load on the CMOS pins is single ended.
3) The load (C_L=50pF) defined in the condition list is a load definition for the single end signal EN and does not intend to add an additional load inside the differential signal lines. For single end signals the load definition defines the max length of the signal on the PCB layout. For the LVDS pads the IEEE Std 1596.3-1996 load definitions apply.

Table 3-50 Strong sharp (ss) driver for clock/data valid for 5V

Parameter	Symbol	Values			Unit	Note / Test Condition
		Min.	Typ.	Max.		
FCLPx clock period	t_{40} CC	2 * T_A	-	-	ns	CL=50pF
Deviation from ideal duty cycle	t_{400} CC	-2	-	2	ns	CL=50pF
SOPx output delay	t_{44} CC	-4	-	3.5	ns	CL=50pF
ENx output delay	t_{45} CC	-4	-	3.5	ns	CL=50pF

Table 3-51 Strong medium (sm) driver for clock/data valid for 5V

Parameter	Symbol	Values			Unit	Note / Test Condition
		Min.	Typ.	Max.		
FCLPx clock period	t_{40} CC	2 * T_A	-	-	ns	CL=50pF
Deviation from ideal duty cycle	t_{400} CC	-5	-	5	ns	CL=50pF
SOPx output delay	t_{44} CC	-7	-	7	ns	CL=50pF
ENx output delay	t_{45} CC	-7	-	7	ns	CL=50pF

Downloaded by IFXDMZ|par-zengzhe 12/02/2019 11:04:31

Table 3-52 Medium (m) driver for clock/data valid for 5V

Parameter	Symbol	Values			Unit	Note / Test Condition
		Min.	Typ.	Max.		
FCLPx clock period	t_{40} CC	2 * T_A	-	-	ns	CL=50pF
Deviation from ideal duty cycle	t_{400} CC	-10	-	10	ns	CL=50pF
SOPx output delay	t_{44} CC	-20	-	20	ns	CL=50pF
ENx output delay	t_{45} CC	-20	-	20	ns	CL=50pF

Table 3-53 Upstream Interface

Parameter	Symbol	Values			Unit	Note / Test Condition
		Min.	Typ.	Max.		
SDI bit time	t_{46} SR	8 * t_{MSC}	-	-	ns	
SDI rise time	t_{48} SR	-	-	200	ns	
SDI fall time	t_{49} SR	-	-	200	ns	

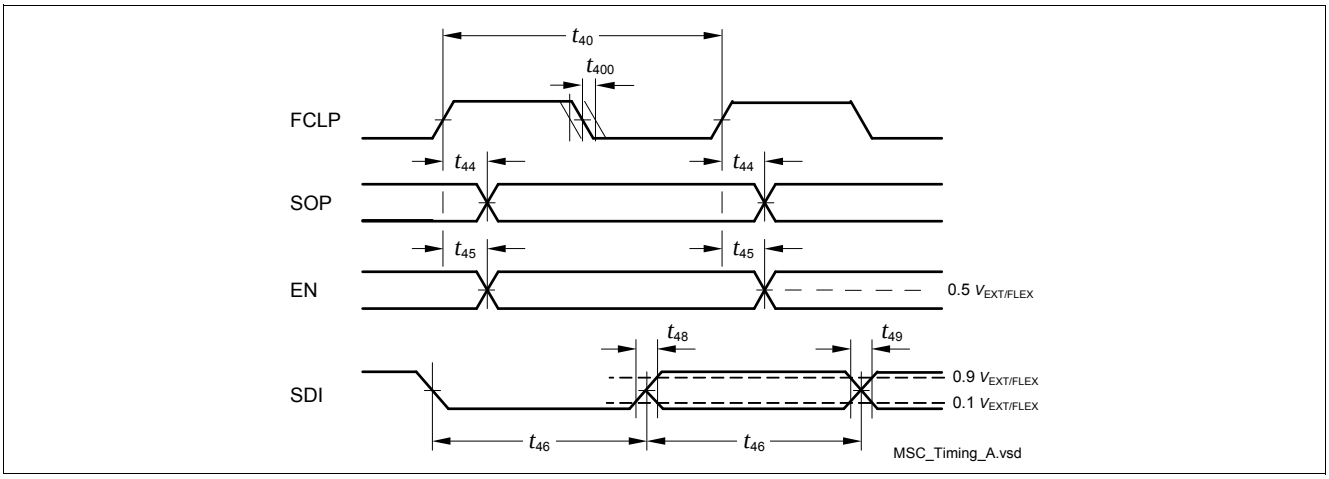

Figure 3-16 MSC Interface Timing

Note: The SOP data signal is sampled with the falling edge of FCLP in the target device.

Downloaded by IFXDMZ|par-zengzhe 12/02/2019 11:04:31

3.24 Ethernet Interface (ETH) Characteristics

3.24.1 ETH Measurement Reference Points

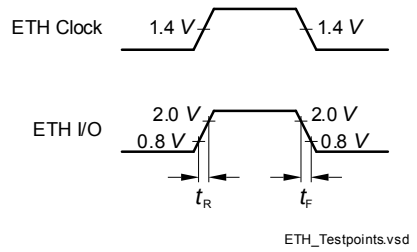

Figure 3-17 ETH Measurement Reference Points

Downloaded by IFXDMZ\par-zengzhe 12/02/2019 11:04:31

3.24.2 ETH Management Signal Parameters (ETH_MDC, ETH_MDIO)

Table 3-54 ETH Management Signal Parameters valid for 3.3V

Parameter	Symbol	Values			Unit	Note / Test Condition
		Min.	Typ.	Max.		
ETH_MDC period	t_1 CC	400	-	-	ns	CL=25pF
ETH_MDC high time	t_2 CC	160	-	-	ns	CL=25pF
ETH_MDC low time	t_3 CC	160	-	-	ns	CL=25pF
ETH_MDIO setup time (output)	t_4 CC	10	-	-	ns	CL=25pF
ETH_MDIO hold time (output)	t_5 CC	10	-	-	ns	CL=25pF
ETH_MDIO data valid (input)	t_6 SR	0	-	300	ns	CL=25pF

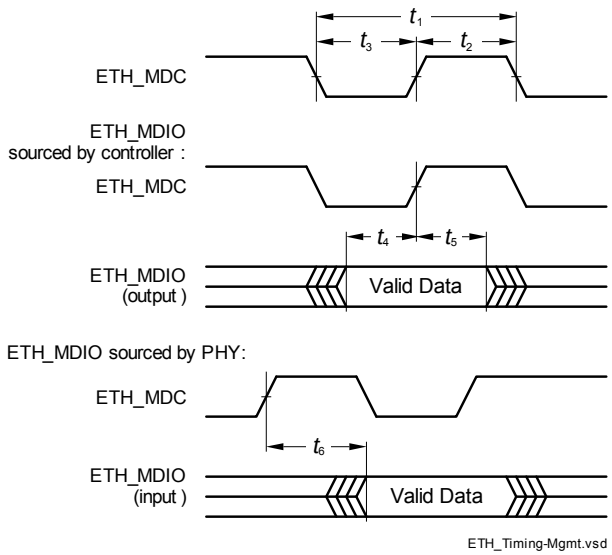

Figure 3-18 ETH Management Signal Timing

Downloaded by IFXDMZ|par-zengzhe 12/02/2019 11:04:31

3.24.3 ETH MII Parameters

In the following, the parameters of the MII (Media Independent Interface) are described.

Table 3-55 ETH MII Signal Timing Parameters

Parameter	Symbol	Values			Unit	Note / Test Condition
		Min.	Typ.	Max.		
Clock period	t_7 SR	40	-	-	ns	CL=25pF ; baudrate=100Mbps
		400	-	-	ns	CL=25pF ; baudrate=10Mbps
Clock high time	t_8 SR	14	-	26	ns	CL=25pF ; baudrate=100Mbps
		140 [1)]	-	260 [2)]	ns	CL=25pF ; baudrate=10Mbps
Clock low time	t_9 SR	14	-	26	ns	CL=25pF ; baudrate=100Mbps
		140 [1)]	-	260 [2)]	ns	CL=25pF ; baudrate=10Mbps
Input setup time	t_{10} SR	10	-	-	ns	CL=25pF
Input hold time	t_{11} SR	10	-	-	ns	CL=25pF
Output valid time	t_{12} CC	0	-	25	ns	CL=25pF

1) Defined by 35% of clock period.
2) Defined by 65% of clock period.

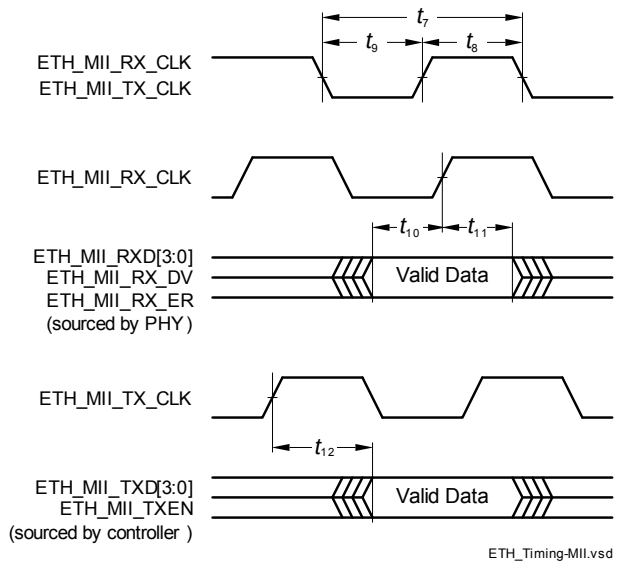

Figure 3-19 ETH MII Signal Timing

Downloaded by IFXDMZ|par-zengzhe 12/02/2019 11:04:31

3.24.4 ETH RMII Parameters

In the following, the parameters of the RMII (Reduced Media Independent Interface) are described.

Table 3-56 ETH RMII Signal Timing Parameters valid for 3.3V

Parameter	Symbol	Values			Unit	Note / Test Condition
		Min.	Typ.	Max.		
ETH_RMII_REF_CL clock period	t_{13} CC	20	-	-	ns	50ppm ; CL=25pF
ETH_RMII_REF_CL clock high time	t_{14} CC	7 [1)]	-	13 [2)]	ns	CL=25pF
ETH_RMII_REF_CL clock low time	t_{15} CC	7 [1)]	-	13 [2)]	ns	CL=25pF
ETHTXEN, ETHTXD[1:0], ETHRXD[1:0], ETHCRSDV; setup time	t_{16} CC	4	-	-	ns	CL=25pF
ETHTXEN, ETHTXD[1:0], ETHRXD[1:0], ETHCRSDV; hold time	t_{17} CC	2	-	-	ns	CL=25pF

1) Defined by 35% of clock period.
2) Defined by 65% of clock period.

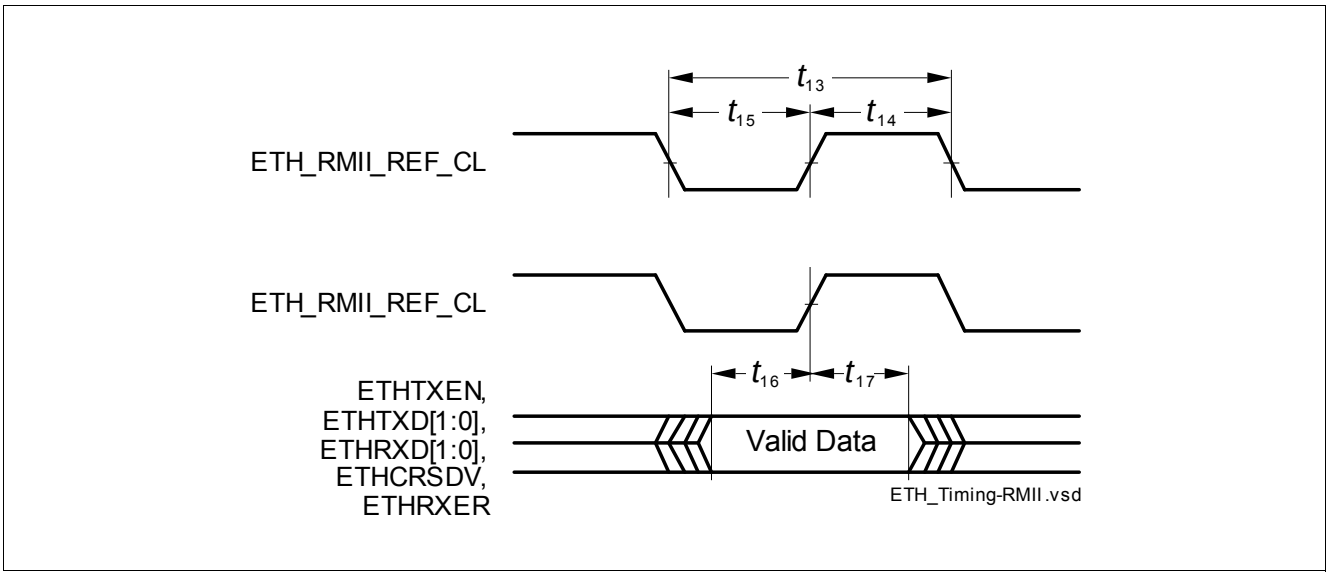

Figure 3-20 ETH RMII Signal Timing

Downloaded by IFXDMZ|par-zengzhe 12/02/2019 11:04:31

3.24.5 ETH RGMII Parameters

In the following, the parameters of the RGMII are described.

Table 3-57 ETH RGMII Signal Timing Parameters valid for 3.3V

Parameter	Symbol	Values			Unit	Note / Test Condition
		Min.	Typ.	Max.		
TX Clock period	t_{19} CC	36	40	44	ns	100Mbps
		360	400	440	ns	10Mbps
		7.2	8	8.8	ns	Gigabit
Data to Clock Output skew	t_{20} CC	-500	0	500	ps	
Data to Clock input skew (at receiver)	t_{21} SR	1	1.8	2.6	ns	SKEWCTL.RXCFG = 0; SKEWCTL.TXCFG = 0
Clock duty cycle	t_{duty} CC	40	50	60	%	10/100Mbps
		45	50	55	%	Gigabit
GREFCLK duty cycle	t_{duty_in} SR	45	-	55	%	
GREFCLK Input accuracy	ACC SR	-0.005	-	0.005	%	

Downloaded by IFXDMZ\par-zengzhe 12/02/2019 11:04:31

3.25 E-Ray Parameters

The timings of this section are valid for the strong driver and sharp edge settings of the output drivers with C_L = 25 pF.

Table 3-58 Transmit Parameters

Parameter	Symbol	Values			Unit	Note / Test Condition
		Min.	Typ.	Max.		
Rise time of TxEN	$t_{dCCTxENRise25}$ CC	-	-	9	ns	C_L=25pF
Fall time of TxEN	$t_{dCCTxENFall25}$ CC	-	-	9	ns	C_L=25pF
Sum of rise and fall time	$t_{dCCTxRise25+dCCTxFall25}$ CC	-	-	9	ns	20% - 80% ; C_L=25pF
Sum of delay between TP1_FF and TP1_CC and delays derived from TP1_FFi, rising edge of TxEN	$t_{dCCTxEN01}$ CC	-	-	25	ns	
Sum of delay between TP1_FF and TP1_CC and delays derived from TP1_FFi, falling edge of TxEN	$t_{dCCTxEN10}$ CC	-	-	25	ns	
Asymmetry of sending	t_{tx_asym} CC	-2.45	-	2.45	ns	C_L=25pF
Sum of delay between TP1_FF and TP1_CC and delays derived from TP1_FFi, rising edge of TxD	$t_{dCCTxD01}$ CC	-	-	25	ns	
Sum of delay between TP1_FF and TP1_CC and delays derived from TP1_FFi, falling edge of TxD	$t_{dCCTxD10}$ CC	-	-	25	ns	
TxD signal sum of rise and fall time at TP1_BD	t_{txd_sum} CC	-	-	9	ns	

Table 3-59 Receive Parameters

Parameter	Symbol	Values			Unit	Note / Test Condition
		Min.	Typ.	Max.		
Acceptance of asymmetry at receiving part	$t_{dCCTxAsymAccept25}$ SR	-30.5	-	43.0	ns	C_L=25pF
Acceptance of asymmetry at receiving part	$t_{dCCTxAsymAccept15}$ SR	-31.5	-	44.0	ns	C_L=15pF
Threshold for detecting logical high	$T_{uCCLogic1}$ SR	35	-	70	%	
Threshold for detecting logical low	$T_{uCCLogic0}$ SR	30	-	65	%	

Downloaded by IFXDMZ|par-zengzhe 12/02/2019 11:04:31

Table 3-59 Receive Parameters (cont'd)

Parameter	Symbol	Values			Unit	Note / Test Condition
		Min.	Typ.	Max.		
Sum of delay between TP4_CC and TP4_FF and delays derived from TP4_FFi, rising edge of RxD	$t_{dCCRxD01}$ CC	-	-	10	ns	
Sum of delay between TP4_CC and TP4_FF and delays derived from TP4_FFi, falling edge of RxD	$t_{dCCRxD10}$ CC	-	-	10	ns	

Downloaded by IFXDMZ|par-zengzhe 12/02/2019 11:04:31

3.26 HSCT Parameters

Table 3-60 HSCT - Rx parasitics and loads

Parameter	Symbol	Values			Unit	Note / Test Condition
		Min.	Typ.	Max.		
Capacitance total budget	C_{total} CC	-	3.5	5	pF	Total Budget for complete receiver including silicon, package, pins and bond wire
Parasitic inductance budget	$Htotal$ CC	-	5	-	nH	

Table 3-61 HSCT - Rx/Tx setup timing

Parameter	Symbol	Values			Unit	Note / Test Condition
		Min.	Typ.	Max.		
RX o/p duty cycle	$DCrx$ CC	40	-	60	%	
Disable time of the LVDS pad	$t_{LVDSDIS}$ CC	-	-	20	ns	
Enable time of the LVDS pad	t_{LVDSEN} CC	-	-	400	ns	
Wakeup time from Sleep Mode	t_{SWU} CC	-	-	250	ns	
Maximum length of a wake-up glitch that does not wake-up the receiver	t_{WUP} CC	-	-	0.2	ns	
Bias startup time	t_{bias} CC	-	5	10	µs	Bias distributor waking up from power down and provide stable Bias.
RX startup time	t_{rxi} CC	-	-	600	ns	Wake-up RX from power down.
TX startup time	t_{tx} CC	-	-	280	ns	Wake-up TX from power down.

Table 3-62 HSCT

Parameter	Symbol	Values			Unit	Note / Test Condition
		Min.	Typ.	Max.		
Bit Error Rate based on 20 MHz reference clock at Slave PLL side	BER_{20} CC	-	-	10EXP-12		Bit Error Rate based on 20 MHz reference clock at Slave PLL side
Transistion time from Rx Disable to Rx Low Speed Mode	t_{DISLS} CC	-	-	700	ns	Transition time from Rx Disable to Rx Low Speed Mode

Downloaded by IFXDMZ|par-zengzhe 12/02/2019 11:04:31

Table 3-62 HSCT (cont'd)

Parameter	Symbol	Values			Unit	Note / Test Condition
		Min.	Typ.	Max.		
Transistion time from Rx High/Low Speed Mode to Rx Medium Speed Mode	t_{HLSMS} CC	-	-	500	ns	Transition time from Rx High/Low Speed Mode to Rx Medium Speed Mode
Transistion time from Rx High/Medium Speed Mode to Rx Low Speed Mode	t_{HMSLS} CC	-	-	600	ns	Transition time from Rx High/Medium Speed Mode to Rx Low Speed Mode
Transistion time from Tx High Speed Mode to Tx Low Speed Mode	t_{HSLS} CC	-	-	600	ns	Transition time from Tx High Speed Mode to Tx Low Speed Mode
Transistion time from Tx Low Speed Mode to Tx High Speed Mode	t_{LSHS} CC	-	-	400	ns	Transition time from Tx Low Speed Mode to Tx High Speed Mode
Transistion time from Rx Medium/Low Speed Mode to Rx High Speed Mode	t_{MLSHS} CC	-	-	400	ns	Transition time from Rx Medium/Low Speed Mode to Rx High Speed Mode
HSCT physical layer power-on	t_{PON} CC	-	-	600	ns	HSCT physical layer power-on

Downloaded by IFXDMZ|par-zengzhe 12/02/2019 11:04:31

3.27 Inter-IC (I2C) Interface Timing

All I2C timing parameter are SR for Master Mode and CC for Slave Mode.

Table 3-63 I2C Standard Mode Timing

Parameter	Symbol	Values			Unit	Note / Test Condition
		Min.	Typ.	Max.		
Fall time of both SDA and SCL	t_1	-	-	300	ns	Measured with a pull-up resistor of 4.7 kohms at each of the SCL and SDA line
Capacitive load for each bus line	C_b SR	-	-	400	pF	
Bus free time between a STOP and ATART condition	t_{10}	4.7	-	-	µs	Measured with a pull-up resistor of 4.7 kohms at each of the SCL and SDA line
Rise time of both SDA and SCL	t_2	-	-	1000	ns	Measured with a pull-up resistor of 4.7 kohms at each of the SCL and SDA line
Data hold time	t_3	0	-	-	µs	Measured with a pull-up resistor of 4.7 kohms at each of the SCL and SDA line
Data set-up time	t_4	250	-	-	ns	Measured with a pull-up resistor of 4.7 kohms at each of the SCL and SDA line
Low period of SCL clock	t_5	4.7	-	-	µs	Measured with a pull-up resistor of 4.7 kohms at each of the SCL and SDA line
High period of SCL clock	t_6	4	-	-	µs	Measured with a pull-up resistor of 4.7 kohms at each of the SCL and SDA line
Hold time for the (repeated) START condition	t_7	4	-	-	µs	Measured with a pull-up resistor of 4.7 kohms at each of the SCL and SDA line

Downloaded by IFXDMZlpar-zengzhe 12/02/2019 11:04:31

Table 3-63 I2C Standard Mode Timing (cont'd)

Parameter	Symbol	Values			Unit	Note / Test Condition
		Min.	Typ.	Max.		
Set-up time for (repeated) START condition	t_8	4.7	-	-	µs	Measured with a pull-up resistor of 4.7 kohms at each of the SCL and SDA line
Set-up time for STOP condition	t_9	4	-	-	µs	Measured with a pull-up resistor of 4.7 kohms at each of the SCL and SDA line

Table 3-64 I2C Fast Mode Timing

Parameter	Symbol	Values			Unit	Note / Test Condition
		Min.	Typ.	Max.		
Fall time of both SDA and SCL	t_1	$20+0.1*C_b$	-	300	ns	Measured with a pull-up resistor of 4.7 kohms at each of the SCL and SDA line
Capacitive load for each bus line	C_b SR	-	-	400	pF	
Bus free time between a STOP and ATART condition	t_{10}	1.3	-	-	µs	Measured with a pull-up resistor of 4.7 kohms at each of the SCL and SDA line
Rise time of both SDA and SCL	t_2	$20+0.1*C_b$	-	300	ns	Measured with a pull-up resistor of 4.7 kohms at each of the SCL and SDA line
Data hold time	t_3	0	-	-	µs	Measured with a pull-up resistor of 4.7 kohms at each of the SCL and SDA line
Data set-up time	t_4	100	-	-	ns	Measured with a pull-up resistor of 4.7 kohms at each of the SCL and SDA line
Low period of SCL clock	t_5	1.3	-	-	µs	Measured with a pull-up resistor of 4.7 kohms at each of the SCL and SDA line
High period of SCL clock	t_6	0.6	-	-	µs	Measured with a pull-up resistor of 4.7 kohms at each of the SCL and SDA line

Downloaded by IFXDMZ|par-zengzhe 12/02/2019 11:04:31

Table 3-64 I2C Fast Mode Timing (cont'd)

Parameter	Symbol	Values			Unit	Note / Test Condition
		Min.	Typ.	Max.		
Hold time for the (repeated) START condition	t_7	0.6	-	-	µs	Measured with a pull-up resistor of 4.7 kohms at each of the SCL and SDA line
Set-up time for (repeated) START condition	t_8	0.6	-	-	µs	Measured with a pull-up resistor of 4.7 kohms at each of the SCL and SDA line
Set-up time for STOP condition	t_9	0.6	-	-	µs	Measured with a pull-up resistor of 4.7 kohms at each of the SCL and SDA line

Table 3-65 I2C High Speed Mode Timing

Parameter	Symbol	Values			Unit	Note / Test Condition
		Min.	Typ.	Max.		
Capacitive load for each bus line	C_b SR	-	-	400	pF	
Fall time of SCL	t_{11}	10 [1)]	-	40 [1)]	ns	bus line load of 100pF
Fall time of SDA	t_{12}	10 [1)]	-	80 [1)]	ns	bus line load of 100pF
Rise time of SCL	t_{13}	10 [1)]	-	40 [1)]	ns	bus line load of 100pF
Rise time of SDA	t_{14}	10 [1)]	-	80 [1)]	ns	bus line load of 100pF
Data hold time	t_3	0 [1)]	-	70 [1)]	ns	bus line load of 100pF
Data set-up time	t_4	10 [1)]	-	-	ns	bus line load of 100pF
Low period of SCL clock	t_5	160 [1)]	-	-	ns	bus line load of 100pF
High period of SCL clock	t_6	60 [1)]	-	-	ns	bus line load of 100pF
Hold time for the (repeated) START condition	t_7	160 [1)]	-	-	ns	bus line load of 100pF
Set-up time for (repeated) START condition	t_8	160 [1)]	-	-	ns	bus line load of 100pF
Set-up time for STOP condition	t_9	160 [1)]	-	-	ns	bus line load of 100pF

1) Values are defined for C_b = 100pF, for the Timing of C_b = 400pF see the I2C Standard.

Downloaded by IFXDMZ|par-zengzhe 12/02/2019 11:04:31

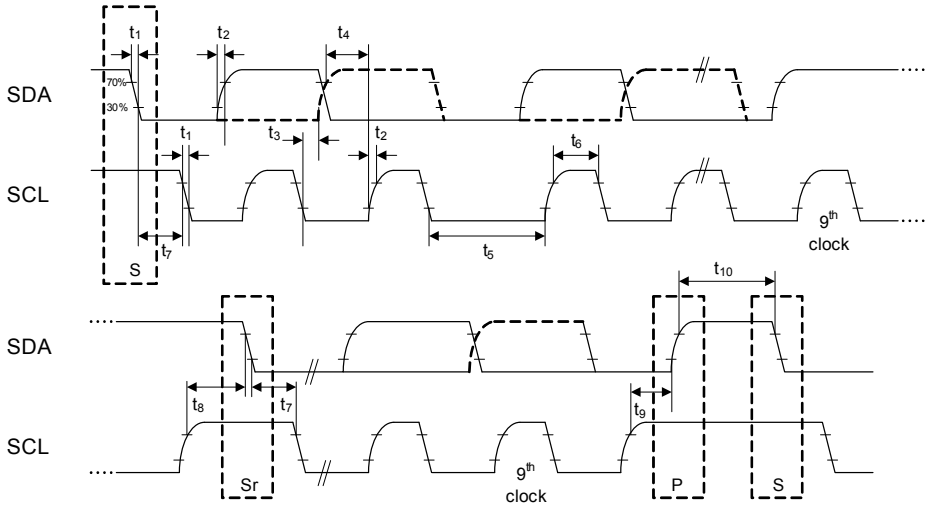

Figure 3-21 I2C Standard and Fast Mode Timing

Downloaded by IFXDMZ|par-zengzhe 12/02/2019 11:04:31

3.28 SDMMC Interface Timing

Table 3-66 SDMMC

Parameter	Symbol	Values			Unit	Note / Test Condition
		Min.	Typ.	Max.		
Clock period Data Transfer Mode	t_1 CC	20	-	-	ns	push-pull, $C_L \leq 30pF$, $V_{EXT} = 3.3V$
Clock period Indentification Mode	t_2 CC	-	-	2500	ns	open-drain, $C_L \leq 30pF$, $V_{EXT} = 3.3V$
Clock low time	t_3 CC	6,5	-	-	ns	$C_L \leq 30pF$, $V_{EXT} = 3.3V$
Clock high time	t_4 CC	6,5	-	-	ns	$C_L \leq 30pF$, $V_{EXT} = 3.3V$
Data output valid time before rising clock edge	t_5 CC	3	-	-	ns	$C_L \leq 30pF$, $V_{EXT} = 3.3V$
Data output valid time after rising clock edge	t_6 CC	3	-	-	ns	$C_L \leq 30pF$, $V_{EXT} = 3.3V$
Data input hold time	t_7 SR	2,5	-	-	ns	$C_L \leq 30pF$, $V_{EXT} =$ 3.3V, TTL levels
Data Input delay time	t_8 SR	-	-	13,7	ns	$C_L \leq 30pF$, $V_{EXT} =$ 3.3V, TTL levels
Data Input setup time	t_9 SR	5,2	-	-	ns	$C_L \leq 30pF$, $V_{EXT} =$ 3.3V, TTL levels

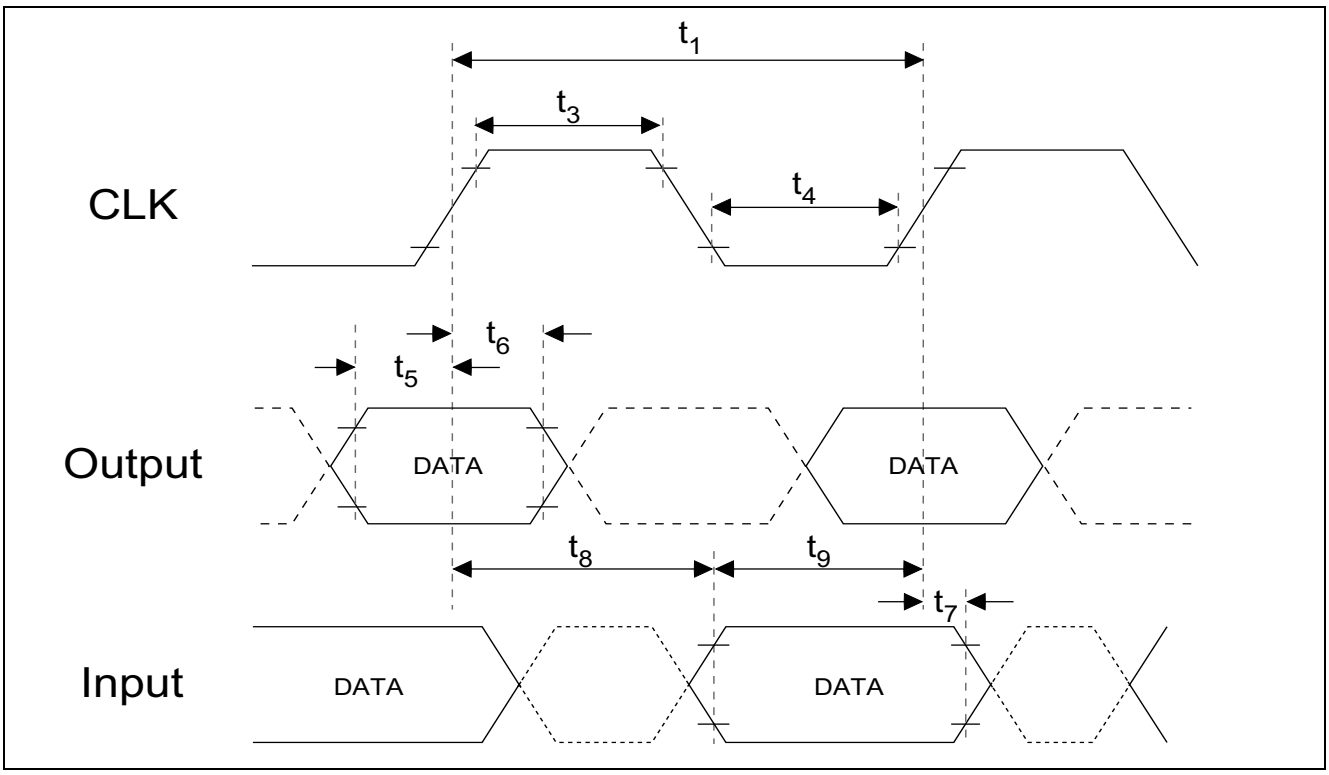

Figure 3-22 SDMMC Timing

Downloaded by IFXDMZ|par-zengzhe 12/02/2019 11:04:31

3.29 FSP Parameter

Table 3-67 Safety

Parameter	Symbol	Values			Unit	Note / Test Condition
		Min.	Typ.	Max.		
Skew between FSP0 and FSP1	$t_{FSPSKEW}$ CC	-8	-	9	ns	C_L=50pF, driver strength m
		-5	-	6	ns	C_L=50pF, driver strength sm
		-4	-	5	ns	C_L=50pF, driver strength ss

Downloaded by IFXDMZ\par-zengzhe 12/02/2019 11:04:31

3.30 Radar Interface Timing

This section defines the timings for RIF in the TC39x.

Table 3-68 Skew Calibration Related

Parameter	Symbol	Values			Unit	Note / Test Condition
		Min.	Typ.	Max.		
Bit time	t_{80} CC	2.5	-	-	ns	
Clock skew form the ideal position in the middle of the data bit	t_{81} SR	-0.6	-	0.6	ns	Baud Rates from 200 to 400MBaud
Set-up time	t_{82} SR	1.5	-	-	ns	Baud rates less than 200MBaud
Hold time	t_{83} SR	1.5	-	-	ns	Baud rates less than 200MBaud
RAMP1 set-up time relative to the FRAME rising edge	t_{88} SR	30	-	-	ns	
RAMP1 hold time relative to the FRAME rising edge	t_{89} SR	30	-	-	ns	

Downloaded by IFXDMZ\par-zengzhe 12/02/2019 11:04:31

3.31 EBU Timings

3.31.1 BFCLKO Output Clock Timing

V_{SS} = 0 V;V_{DD} = 1.3 V ± 5%; 3.3 V ± 5%,

Table 3-69 BFCLK0 Output Clock Timing Parameters[1)]

Parameter	Symbol	Values			Unit	Note / Test Condition
		Min.	Typ.	Max.		
BFCLKO clock period	t_{BFCLKO} CC	13.33[2)]	–	–	ns	–
BFCLKO high time	t_5 CC	3	–	–	ns	–
BFCLKO low time	t_6 CC	3	–	–	ns	–
BFCLKO rise time	t_7 CC	–	–	3	ns	–
BFCLKO fall time	t_8 CC	–	–	3	ns	–
BFCLKO duty cycle $t_5/(t_5 + t_6)$[3)]	DC	35	50	55	%	–

1) Not subject to production test, verified by design/characterization.
2) The PLL jitter characteristics add to this value according to the application settings. See the PLL jitter parameters.
3) The PLL jitter is not included in this parameter. If the BFCLKO frequency is equal to f_{CPU}, the K divider has to be regarded.

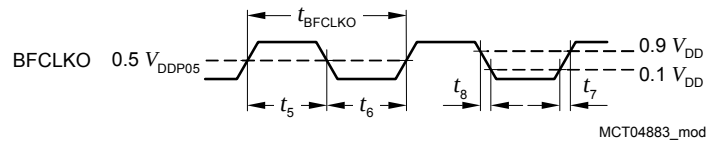

Figure 3-23 BFCLKO Output Clock Timing

3.31.2 EBU Asynchronous Timings

For each timing, the accumulated PLL jitter of the programed duration in number of clock periods must be added separately.

Table 3-70 Common Asynchronous Timings valid for 3.3V

Parameter	Symbol	Values			Unit	Note / Test Condition
		Min.	Typ.	Max.		
AD(31:0) output delay to ADV# rising edge, multiplexed read / write	t_{13} CC	-5.5	-	2.5	ns	C_L=35pF
AD(31:0) output delay to ADV# rising edge, multiplexed read / write	t_{14} CC	-5.5	-	2.5	ns	C_L=35pF
Address valid to CS falling edge (deviation from programmed value)	t_{15} CC	-2	-	2.5	ns	C_L=35pF

Downloaded by IFXDMZ|par-zengzhe 12/02/2019 11:04:31

Table 3-70 Common Asynchronous Timings valid for 3.3V (cont'd)

Parameter	Symbol	Values			Unit	Note / Test Condition
		Min.	Typ.	Max.		
Address valid to ADV falling edge (deviation from programmed value)	t_{16} CC	-2	-	2.5	ns	C_L=35pF
ADV falling edge -> CS falling edge (deviation from programmed value)	t_{17} CC	-2	-	2.5	ns	C_L=35pF
Pulse wdih deviation from the ideal programmed width due to B pad asymmetry, rise delay - fall delay	t_a CC	-0.8	-	0.8	ns	edge=medium; C_L=35pF
		-0.8	-	0.8	ns	edge=sharp; C_L=35pF

Table 3-71 Asynchronous Read Timings valid for 3.3V

Parameter	Symbol	Values			Unit	Note / Test Condition
		Min.	Typ.	Max.		
A(23:0) output delay to $\overline{RD}$ rising edge, deviation from the ideal programmed value	t_0 CC	-2.5	-	2.5	ns	C_L=35pF
Data input Hold from CS rising edge	t_{18} CC	-6	-	-	ns	C_L=35pF
Data input Setup to CS rising edge	t_{19} CC	19	-	-	ns	C_L=35pF
A(23:0) output delay to RD rising edge, deviation from the ideal programmed value	t_1 CC	-2.5	-	2.5	ns	C_L=35pF
CS rising edge to RD rising edge, deviation from the ideal programmed value	t_2 CC	-2	-	2.5	ns	C_L=35pF
ADV rising edge to RD rising edge, deviation from the ideal programmed value	t_3 CC	-2	-	4.5	ns	C_L=35pF
BC rising edge to RD rising edge, deviation from the ideal programmed value	t_4 CC	-2.5	-	2.5	ns	C_L=35pF
WAIT input setup to RD rising edge, deviation from the ideal programmed value	t_5 SR	19	-	-	ns	C_L=35pF
WAIT input hold to RD rising edge, deviation from the ideal programmed value	t_6 SR	-4	-	-	ns	C_L=35pF
Data input setup to RD rising edge, deviation from the ideal programmed value	t_7 SR	19	-	-	ns	C_L=35pF

Downloaded by IFXDMZ|par-zengzhe 12/02/2019 11:04:31

Table 3-71 Asynchronous Read Timings valid for 3.3V (cont'd)

Parameter	Symbol	Values			Unit	Note / Test Condition
		Min.	Typ.	Max.		
Data input hold to RD rising edge, deviation from the ideal programmed value	t_8 SR	-4	-	-	ns	C_L=35pF
MR / W output delay to RD# rising edge, deviation from the ideal programmed value	t_9 CC	-2.5	-	1.5	ns	C_L=35pF

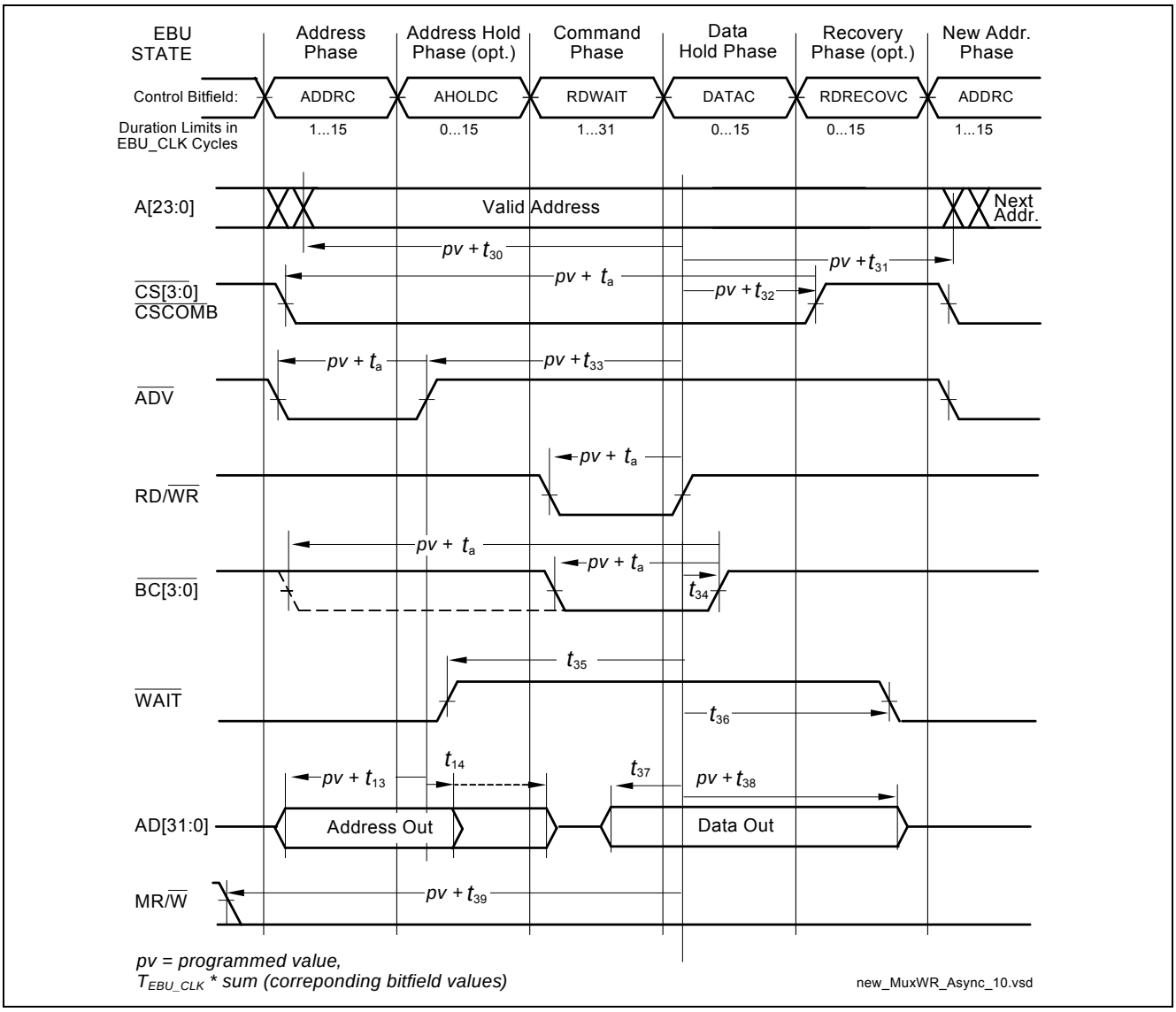

Figure 3-24 Multiplexed Read Access

Downloaded by IFXDMZ|par-zengzhe 12/02/2019 11:04:31

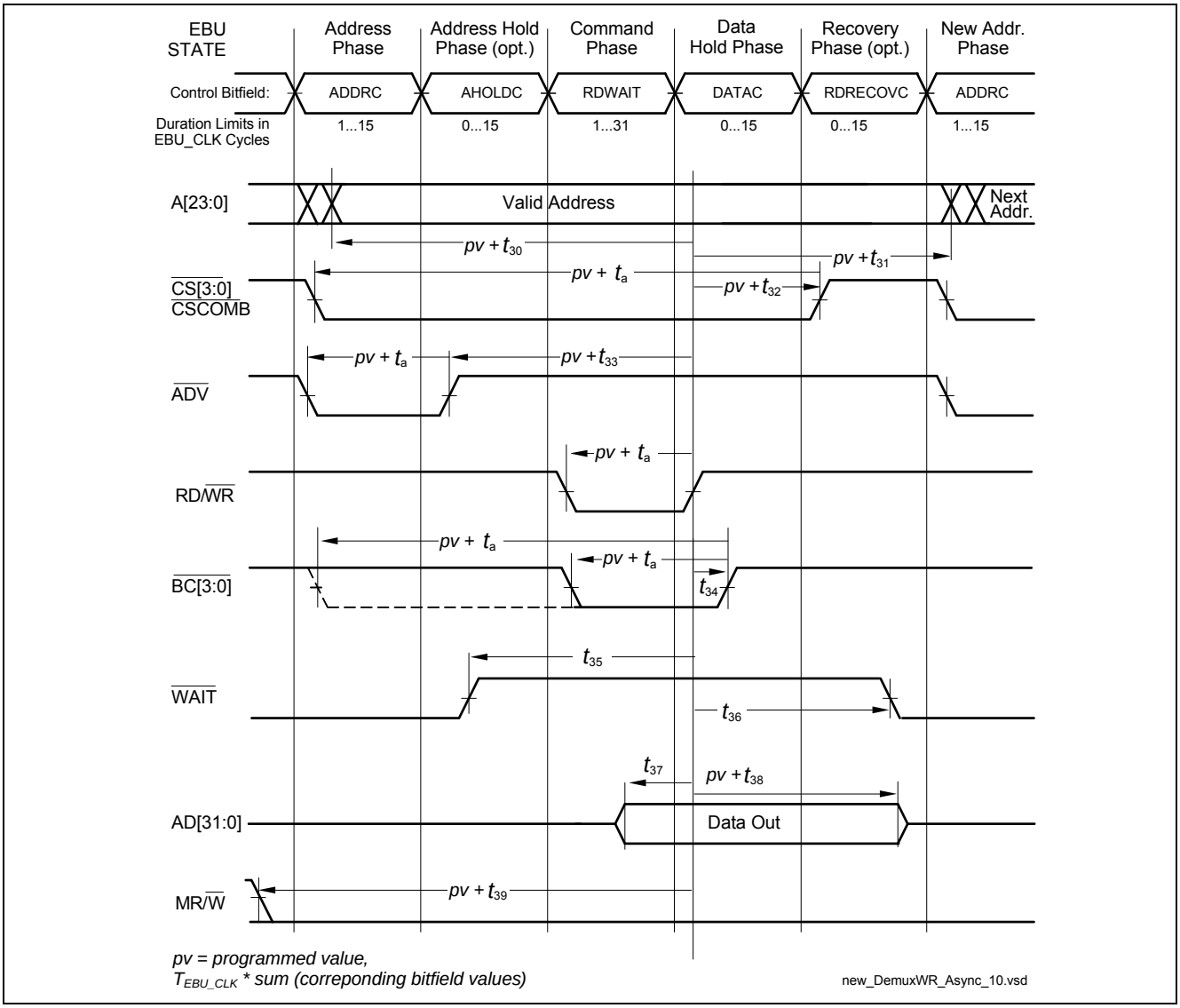

Figure 3-25 Demultiplexed Read Access

Table 3-72 Asynchnronous Write Timings valid for 3.3V

Parameter	Symbol	Values			Unit	Note / Test Condition
		Min.	Typ.	Max.		
A(23:0) output delay to WR rising edge, deviation from the ideal programmed value	t_{30} CC	-2.5	-	2.5	ns	C_L=35pF
A(23:0) output delay to WR rising edge, deviation from the ideal programmed value	t_{31} CC	-2.5	-	2.5	ns	C_L=35pF
CS rising edge to WR rising edge, deviation from the ideal programmed value	t_{32} CC	-2	-	2.5	ns	C_L=35pF

Downloaded by IFXDMZ|par-zengzhe 12/02/2019 11:04:31

Table 3-72 Asynchnronous Write Timings valid for 3.3V (cont'd)

Parameter	Symbol	Values			Unit	Note / Test Condition
		Min.	Typ.	Max.		
ADV rising edge to WR rising edge, deviation from the ideal programmed value	t_{33} CC	-2.5	-	2	ns	C_L=35pF
BC rising edge to WR rising edge, deviation from the ideal programmed value	t_{34} CC	-2.5	-	2	ns	C_L=35pF
WAIT input setup to WR rising edge, deviation from the ideal programmed value	t_{35} SR	19	-	-	ns	C_L=35pF
WAIT input hold to WR rising edge, deviation from the ideal programmed value	t_{36} SR	0	-	-	ns	C_L=35pF
Data output delay to WR rising edge, deviation from the ideal programmed value	t_{37} CC	-5.5	-	2.5	ns	C_L=35pF
Data output delay to WR rising edge, deviation from the ideal programmed value	t_{38} CC	-5.5	-	2.5	ns	C_L=35pF
MR / W output delay to WR rising edge, deviation from the ideal programmed value	t_{39} CC	-2.5	-	1.5	ns	C_L=35pF

3.31.3 EBU Burst Mode Access Timing

V_{SS} = 0 V;V_{DD} = 1.3 V ± 5%; V_{DDEBU} = 3.3 V ± 5%;

Table 3-73 Burst Read Timings valid for 3.3V

Parameter	Symbol	Values			Unit	Note / Test Condition
		Min.	Typ.	Max.		
Output delay from BFCLKO rising edge	t_{10} CC	-2	-	2.5	ns	C_L=35pF
RD and RD/WR active/inactive after BFCLKO active edge	t_{12} CC	-2	-	2	ns	C_L=35pF
CSx output delay from BFCLKO active edge	t_{21} CC	-2.5	-	2.0	ns	C_L=35pF
ADV active/inactive after BFCLKO active edge	t_{22} CC	-2	-	2	ns	C_L=35pF
BAA active/inactive after BFCLKO active edge	t_{22a} CC	-2.5	-	2.0	ns	C_L=35pF
Data setup to BFCLKI rising edge	t_{23} SR	5	-	-	ns	C_L=35pF
Data hold from BFCLKI rising edge	t_{24} SR	0	-	-	ns	C_L=35pF

Downloaded by IFXDMZ|par-zengzhe 12/02/2019 11:04:31

Table 3-73 Burst Read Timings valid for 3.3V (cont'd)

Parameter	Symbol	Values			Unit	Note / Test Condition
		Min.	Typ.	Max.		
WAIT setup (low or high) to BFCLKI rising edge	t_{25} SR	5	-	-	ns	C_L=35pF
WAIT hold (low or high) from BFCLKI rising edge	t_{26} SR	0	-	-	ns	C_L=35pF

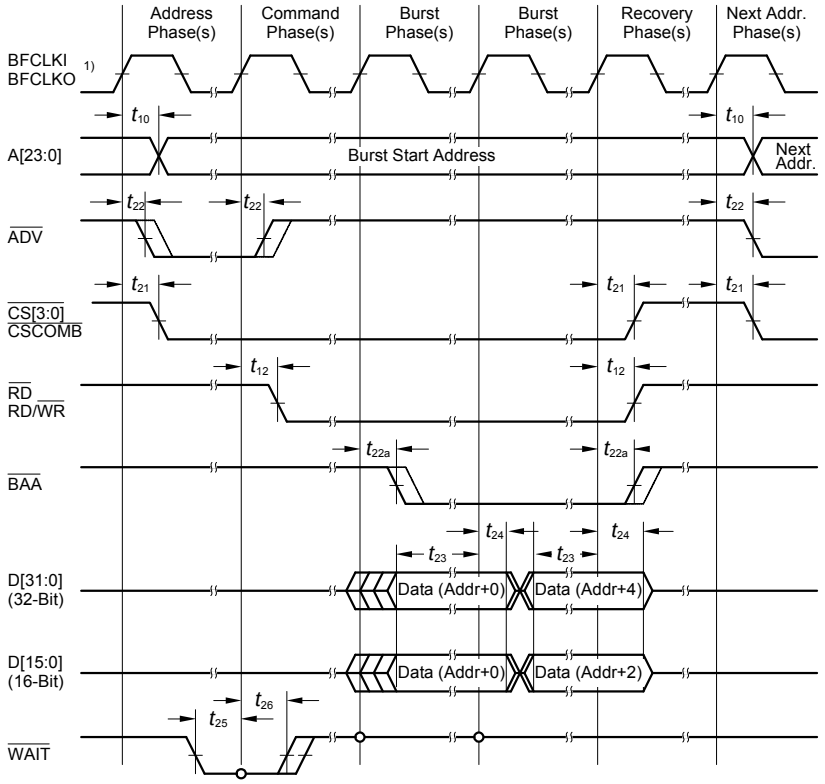

1) Output delays are always referenced to BCLKO. The reference clock for input characteristics depends on bit EBU_BFCON.FDBKEN.
EBU_BFCON.FDBKEN = 0: BFCLKO is the input reference clock.
EBU_BFCON.FDBKEN = 1: BFCLKI is the input reference clock (EBU clock feedback enabled).

Figure 3-26 EBU Burst Mode Read / Write Access Timing

Downloaded by IFXDMZ|par-zengzhe 12/02/2019 11:04:31

3.31.4 EBU Arbitration Signal Timing

V_{SS} = 0 V;V_{DD} = 1.5 V ± 5%; V_{DDEBU} = 3.3 V ± 5% ;

Table 3-74 EBU Arbitration Timings valid for 3.3V

Parameter	Symbol	Values			Unit	Note / Test Condition
		Min.	Typ.	Max.		
Output delay from BFCLKO rising edge	t_{27} CC	-	-	3	ns	C_L=35pF
Data setup to BFCLKO falling edge	t_{28} SR	16	-	-	ns	C_L=35pF
Data hold from BFCLKO falling edge	t_{29} SR	2	-	-	ns	C_L=35pF

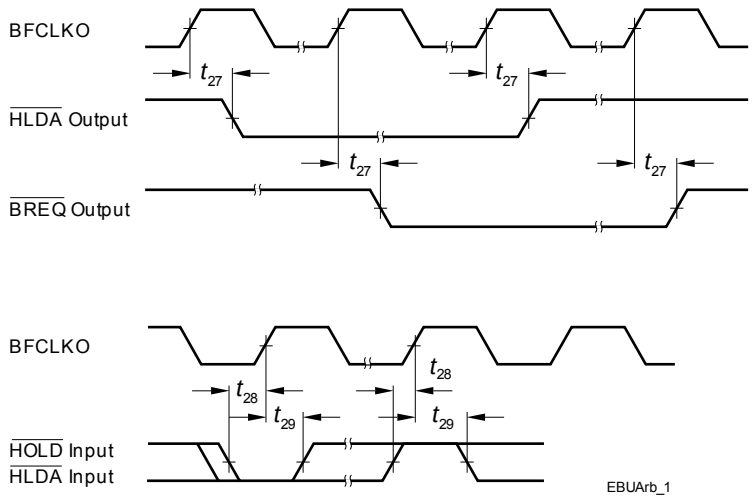

Figure 3-27 EBU Arbitration Signal Timing

Downloaded by IFXDMZ|par-zengzhe 12/02/2019 11:04:31

3.32 Flash Target Parameters

Table 3-75 Flash

Parameter	Symbol	Values			Unit	Note / Test Condition
		Min.	Typ.	Max.		
Program Flash Erase Time per logical sector [1)]	t_{ERP} CC	-	-	0.5	s	cycle count < 1000
Program Flash Erase Time per Multi-Sector Command [1)]	t_{MERP} CC	-	-	0.5	s	For consecutive logical sectors in a physical sector with total range ≤ 512 kByte; cycle count < 1000
Program Flash program time per page in 5 V mode [1)]	t_{PRP5} CC	-	-	80	µs	32 Byte
Program Flash program time per page in 3.3 V mode [1)]	t_{PRP3} CC	-	-	115	µs	32 Byte
Program Flash program time per burst in 5 V mode [1)]	t_{PRPB5} CC	-	-	220	µs	256 Byte
Program Flash program time per burst in 3.3 V mode [1)]	t_{PRPB3} CC	-	-	530	µs	256 Byte
Program Flash program time for 1 MByte with burst programming in 3.3 V mode excluding communication [1)]	t_{PRPB3_1MB} CC	-	-	2.2	s	Derived value for documentation purpose
Program Flash program time for 1 MByte with burst programming in 5 V mode excluding communication [1)]	t_{PRPB5_1MB} CC	-	-	1	s	Derived value for documentation purpose
Program Flash program time for complete PFlash with burst programming in 5 V mode excluding communication [1)]	t_{PRPB5_PF} CC	-	-	16	s	Derived value for documentation purpose
Write Page Once adder [1)]	t_{ADD} CC	-	-	20	µs	Adder to Program Time when using Write Page Once
Program Flash suspend to read latency [1)]	t_{SPNDP} CC	-	-	120	µs	For Write Burst, Verify Erased and for multi-(logical) sector erase commands
Data Flash Erase Disturb Limit (single ended sensing mode)	N_{DFD} CC	-	-	50	cycles	
Data Flash Erase Disturb Limit (complement sensing mode)	N_{DFDC} CC	-	-	500	cycles	
UCB Erase Disturb Limit	N_{UCBD} CC	-	-	500	cycles	

Downloaded by IFXDMZ|par-zengzhe 12/02/2019 11:04:31

Table 3-75 Flash (cont'd)

Parameter	Symbol	Values			Unit	Note / Test Condition
		Min.	Typ.	Max.		
Program time data flash per page [1)2)]	t_{PRD} CC	-	-	75	µs	8 Byte
Complete Device Flash Erase Time PFlash and DFlash [1)3) 4) 5)]	t_{ER_Dev} CC	-	10.4	18.5	s	Valid for less than 1000 cycles, w/o UCB. Derived value for documentation purpose.
Data Flash program time per burst [1)2)]	t_{PRDB} CC	-	-	140	µs	32 Byte
Data Flash suspend to read latency [1)]	t_{SPNDD} CC	-	-	120	µs	
Wait time after margin change	$t_{FL_MarginDel}$ CC	-	-	2	µs	
Program Flash Endurance per Logical Sector	N_{E_P} CC	-	-	1000	cycles	Replace logical sector command shall be used if a sector fails during erase or program
Number of erase operations per physical sector in program flash	N_{ERP} CC	-	-	16000	cycles	
Program Flash Retention Time, Sector	t_{RET} CC	20	-	-	years	Max. 1000 erase/program cycles
UCB Retention Time	t_{RTU} CC	20	-	-	years	Max. 100 erase/program cycles per UCB, max 500 erase/program cycles for all UCBs together
Data Flash access delay	t_{DF} CC	-	-	100	ns	see RFLASH of DMU register HF_DWAIT
Data Flash ECC Delay	t_{DFECC} CC	-	-	20	ns	see RECC of DMU register HF_DWAIT
Program Flash access delay	t_{PF} CC	-	-	30	ns	see RFLASH of DMU register HF_PWAIT
Program Flash ECC delay	t_{PFECC} CC	-	-	10	ns	see RECC and CECC of DMU register HF_PWAIT
Number of erase operations on DF0 over lifetime (complement sensing mode) [6)]	N_{ERD0C} CC	-	-	4000000	cycles	
Number of erase operations on DF0 over lifetime (single ended sensing mode) [7)]	N_{ERD0S} CC	-	-	750000	cycles	

Downloaded by IFXDMZ|par-zengzhe 12/02/2019 11:04:31

Table 3-75 Flash (cont'd)

Parameter	Symbol	Values			Unit	Note / Test Condition
		Min.	Typ.	Max.		
Number of erase operations on DF1 over lifetime (complement sensing mode) [6]	N_{ERD1C} CC	-	-	2000000	cycles	
Number of erase operations on DF1 over lifetime (single ended sensing mode) [7]	N_{ERD1S} CC	-	-	500000	cycles	
Data Flash Endurance per EEPROMx sector (complement sensing mode) [8]	N_{E_EEP10C} CC	-	-	500000	cycles	Max. data retention time 10 years
DataFlash Endurance per EEPROMx sector (single ended sensing mode) [8]	N_{E_EEP10S} CC	-	-	125000	cycles	Retention time and Tj according below example temperature profile
		-	-	125000	cycles	max data retention time 20y, Tj=110°C
		-	-	125000	cycles	max data retention time 8.2y, Tj=125°C
Data Flash Endurance per HSMx sector (complement sensing mode) [8]	N_{E_HSMC} CC	-	-	250000	cycles	Max. data retention time 10 years
Data Flash Endurance per HSMx sector (single ended sensing mode) [8]	N_{E_HSMS} CC	-	-	125000	cycles	Retention time and Tj according below example temperature profile
		-	-	125000	cycles	max data retention time 20y, Tj=110°C
		-	-	125000	cycles	max data retention time 8.2y, Tj=125°C
Junction temperature limit for PFlash program/erase operations	$T_{JPFlash}$ SR	-	-	150	°C	
Data Flash Erase Time per Sector [1)3)5)]	t_{ERD1} CC	-	-	0.5	s	Max. 1000 erase/program cycles
Data Flash Erase Time per Sector [1)3)5)]	t_{ERDM} CC	-	-	1.5	s	Max allowed cycles, see NE_EEP10 and NE_HSM parameters
DataFlash Adder on Erase Time per 32kByte erase size when using complement sensing mode [1)]	$t_{ER_ADDC32C}$ CC	-	-	50	ms	Adder per 32 kByte on erase time; applicable only when using complement mode

Downloaded by IFXDMZ|par-zengzhe 12/02/2019 11:04:31

Table 3-75 Flash (cont'd)

Parameter	Symbol	Values			Unit	Note / Test Condition
		Min.	Typ.	Max.		
Data Flash Erase Time per Multi-Sector Command [1)3)5)]	t_{MERD1} CC	-	-	0.5	s	Max 1000 erase/program cycles; For consecutive logical sectors ≤ 256KBytes
Data Flash Erase Time per Multi-Sector Command [1)3)5)]	t_{MERDM} CC	-	-	1.5	s	Max allowed cycles, see NE_EEP10x and NE_HSMx Parameters; For consecutive logical sectors ≤ 256 kByte
Program Flash Access Delay at reduced VDDP3 voltage supply during cranking	$t_{PF_low_VDDP3}$ CC	-	-	60	ns	see register DMU_HF_PWAIT.CFLASH
Data Flash Erase Verify time per page (Complement Sensing) [2)]	$t_{VER_PAGE_DC}$ CC	-	-	10	µs	Time per 8 Byte page for Verify Erased Page command
Data Flash Erase Verify time per page (Single Ended Sensing) [1)]	$t_{VER_PAGE_DS}$ CC	-	-	10	µs	Time per 8 Byte page for Verify Erased Page command
Program Flash Erase Verify time per page [1)]	$t_{VER_PAGE_P}$ CC	-	-	10	µs	Time per 32 Byte page for Verify Erased Page command
Data Flash Erase Verify time per sector (Complement Sensing) [1)]	$t_{VER_SEC_DC}$ CC	-	-	200	µs	Time per 2 KB sector for Verify Erased Logical Sector Range command
Data Flash Erase Verify time per sector (Single Ended Sensing) [1)]	$t_{VER_SEC_DS}$ CC	-	-	360	µs	Time per 4 KB sector for Verify Erased Logical Sector Range command
Program Flash Erase Verify time per sector [1)]	$t_{VER_SEC_P}$ CC	-	-	360	µs	Time per 16KB sector for Verify Erased Logical Sector Range command
Data Flash Erase Verify time per wordline (Complement Sensing) [1)]	$t_{VER_WL_DC}$ CC	-	-	30	µs	
Data Flash Erase Verify time per wordline (Single Ended Sensing) [1)]	$t_{VER_WL_DS}$ CC	-	-	50	µs	
Program Flash Erase Verify time per wordline [1)]	$t_{VER_WL_P}$ CC	-	-	30	µs	

1) Only vaild for f_{FSI} = 100MHz.

2) Time is not dependent on program mode (5V or 3.3V).

Downloaded by IFXDMZ|par-zengzhe 12/02/2019 11:04:31

3) Under out-of-spec conditions (e.g. over-cycling) or in case of activation of WL oriented defects, the duration of erase processes may be increased by up to 50%.
4) Using 512 kByte / 256 kByte erase commands (PFlash / DFlash).
5) If the DataFlash is operated in Complement Sensing Mode the erase time is increased by erase_size / 32kByte x tER_ADDC32C
6) Allows segmentation of addressable memory into 8 logical sectors; round robin cycling must still be done to consider erase disturb limit N_{DFD}.
7) Allows segmentation of addressable memory into 6 logical sectors; round robin cycling must still be done to consider erase disturb limit N_{DFD}.
8) Only valid when a robust EEPROM emulation algorithm is used. For more details see the Users Manual.

Downloaded by IFXDMZ|par-zengzhe 12/02/2019 11:04:31

3.33 Quality Declarations

Table 3-76 Quality Parameters

Parameter	Symbol	Values			Unit	Note / Test Condition
		Min.	Typ.	Max.		
Moisture Sensitivity Level	*MSL* CC	-	-	3		Conforming to Jedec J-STD--020C for 240C
ESD susceptibility according to Charged Device Model (CDM)	V_{CDM} SR	-	-	500 [1)]	V	for all other balls/pins; conforming to JESD22-C101-C
		-	-	750	V	for corner balls/pins; conforming to JESD22-C101-C
ESD susceptibility according to Human Body Model (HBM)	V_{HBM} SR	-	-	2000 [2)]	V	Conforming to JESD22-A114-B
ESD susceptibility of the LVDS pins according to Human Body Model (HBM)	V_{HBM1} SR	-	-	500	V	
Operation Lifetime	t_{OP} CC	-	-	24500	hour	see below temperature profile as an example

1) Pads of the AGBT interface are limited to a maximum value of 250V.

2) Pads of the AGBT interface are limited to a maximum value of 1000V.

Example Temperature Profile

The following temperature profile is an example. Application specific temperature profiles need to be aligned and approved by Infineon Technologies for the fulfillment of quality and reliability targets.

Table 3-77 Example Temperature Profile

T_J=	Duration [h]	Comment
≤ 170°C	≤ 30	
≤ 160°C	≤ 120	
≤ 150°C	≤ 220	
≤ 140°C	≤ 350	
≤ 130°C	≤ 780	
≤ 120°C	≤ 1600	
≤ 110°C	≤ 3000	
≤ 100°C	≤ 7000	
≤ 90°C	≤ 8000	
≤ 80°C	≤ 2400	
≤ 70°C	≤ 1000	
	≤ 24500	total time

Downloaded by IFXDMZ|par-zengzhe 12/02/2019 11:04:31

Table 3-78 Example Inactive Lifetime Temperature Profile

T_J=	Duration [h]	Comment
≤ 55°C	≤ 150700	

Downloaded by IFXDMZ\par-zengzhe 12/02/2019 11:04:31

3.34 Package Outline

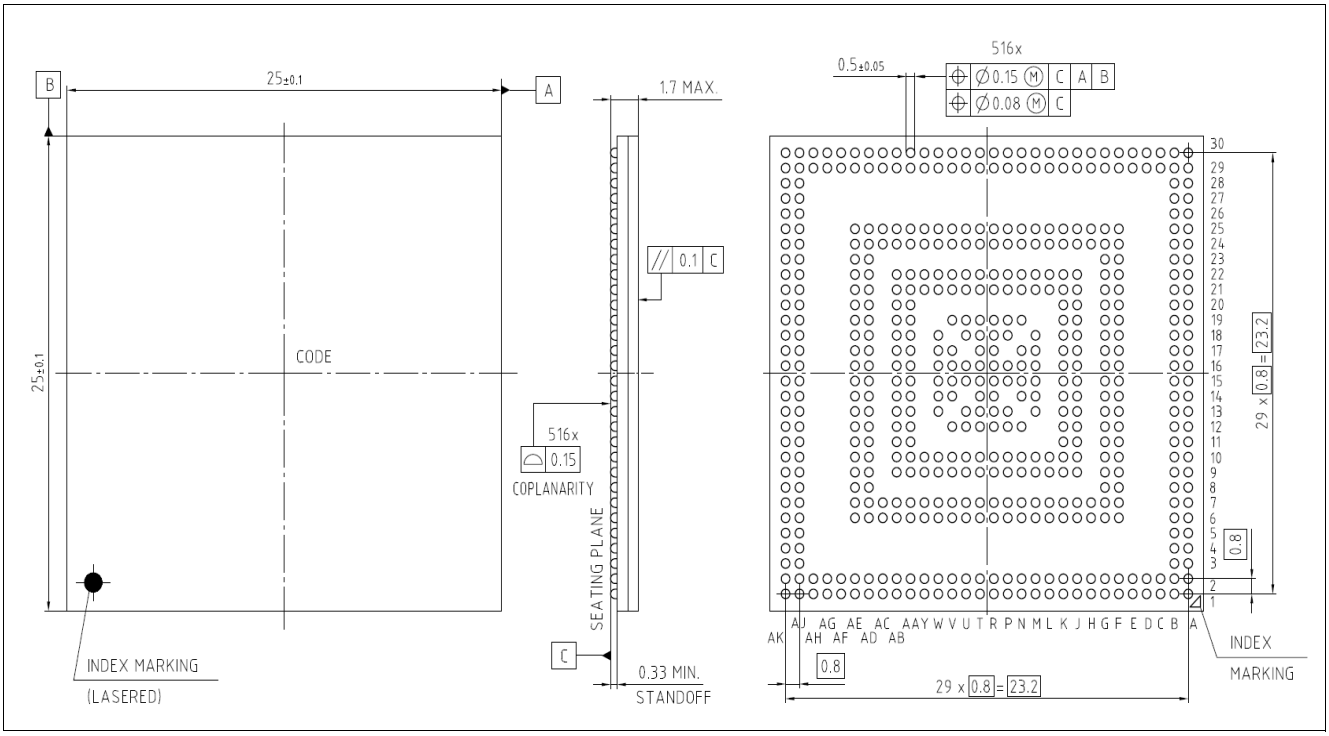

Figure 3-28 Package Outlines PG-LFBGA-516-10

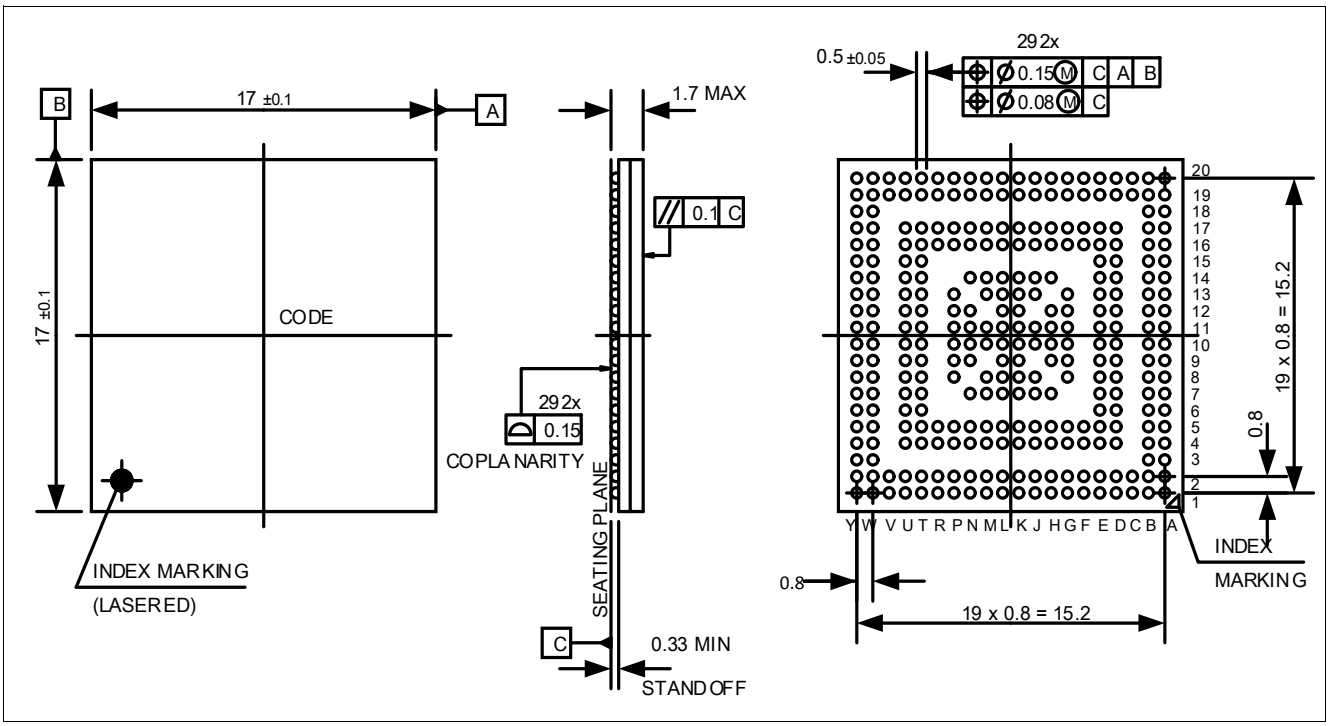

Figure 3-29 Package Outlines LF-BGA-292-10

You can find all of our packages, sorts of packing and others in our Infineon Internet Page “Products”: http://www.infineon.com/products.

Downloaded by IFXDMZ|par-zengzhe 12/02/2019 11:04:31

3.34.1 Package Parameters

Table 3-79 Package Parameters

Parameter	Symbol	Values			Unit	Note / Test Condition
		Min.	Typ.	Max.		
Thermal resistance (junction to ambient) [1]	RTH_JA CC	-	-	14	K/W	LFBGA292
		-	-	12.2	K/W	LFBGA516
Thermal resistance (junction to case bottom) [1]	RTH_JCB CC	-	-	4	K/W	LFBGA292
		-	-	3	K/W	LFBGA516
Thermal resistance (junction to case top) [1]	RTH_JCT CC	-	-	5	K/W	LFBGA292
		-	-	5	K/W	LFBGA516

1) The top and bottom thermal resistances between the case and the ambient (RTH_CTA, RTH_CBA) are to be combined with the thermal resistances between the junction and the case given above (RTH_JCT, RTH_JCB), in order to calculate the total thermal resistance between the junction and the ambient (RTH_JA). The thermal resistances between the case and the ambient (RTH_CTA, RTH_CBA) depend on the external system (PCB, case) characteristics and are under user responsibility.
The junction temperature can be calculated using the following equation: TJ = TA + RTH_JA * PD, where the RTH_JA is the total thermal resistance between the junction and the ambient.
Thermal resistances as measured by the 'cold plate method' (MIL SPEC-883 Method 1012.1).

Downloaded by IFXDMZ|par-zengzhe 12/02/2019 11:04:31

4 History

Version 0.4 is the first version of this document.

4.1 Changes from Version 0.4 to Version 0.6

- Update table Platform Feature Overview
- Changes in Pin Definition and Functions
  - Add pad type RFAST to Legend
  - Corrected ball assigmant to NC and NC1
  - P32.0 replace name from EVR13 to EVRC
  - P32.1 replace name from EVR13 to EVRC
  - Add Function description for GTM_TIM_INxx Symbols
  - Change numbering for GTM_TIM_INxx Symbols
  - Update Function description for CAN signals
  - Add missing Function description for EVADC
  - Add missing Function description for EDSADC
  - Add Function description for GTM_DTMxx Symbols
  - Update Function description for SCU_E_REQ signals
  - Change Symbol for SCU_E_REQ signals
  - Update Function description for SCU_PD_HWCFGx signals
  - Add QSPI5_SCLK to P14.10
  - Remove SDMMC_DS from P15.2
  - Remove PLL_WRAPPER_ANA_0_PAD_SYSCLK
  - Switch CBS_TGyz from inverted to non inverted
  - Change Symbol from HSCTPHY_1_RXDx to HSCT1_RXDx
  - Change Symbol from SCU_EMGSTOP_B_RIQ to SCU_EMGSTOP_PORT_B
  - Add CCUEXTCLK0
  - Add EDSADC_EDS9NB to AN70
  - Add EDSADC_EDS9NB to AN71
  - Add PMS_DCDCSYNCO to P32.4
  - Add DAP3 to P21.6
  - Remove SDMMC_DS from P15.2
  - ADD TDI to P21.6
  - Add DAPE1 to P21.6
  - Add DAP2 to P21.7
  - ADD TDO to P21.7
  - Remove DAP Function description from P21.7 Input
  - Change Symbol HSDPM_HSDPM_xxx to HSDPM_xxx
  - Switch EBU_x from inverted to non inverted
  - Add HSDPM_MUTE to P22.3

Downloaded by IFXDMZlpar-zengzhe 12/02/2019 11:04:31

  - Add HSDPM_BS0 to P22.4
  - Change P22.4 from SLOW to FAST
  - Add HSDPM_BS1 to P22.5
  - Change P22.5 from SLOW to FAST
  - Change Symbol from SCU_EMGSTOP_A_RIQ to SCU_EMGSTOP_PORT_A
  - Add EVADC_G5CH2 to AN50
  - Add EDSADC_EDS9PB to AN70
  - Add EDSADC_EDS9NB to AN71
  - Add Buffer Type to ABGT Symbols
- Changes in table 'Overload Parameters' of Overload
  - Change max value of K_{OVDN} from $6*10^{-4}$ to $1*10^{-4}$
  - Change note of K_{OVDN} from 'Overload injected on GPIO non LVDS pad and affecting neighbor slow pads; -2mA < I_{IN} < 0mA' to 'Overload injected on GPIO non LVDS pad and affecting neighbor slow pads; -5mA < I_{IN} < 0mA'
  - Change note of K_{OVDN} from '$1.7*10^{-3}$' to '$3*10^{-4}$'
  - Change max value of K_{OVDN} from 0.3 to 0.5
  - Change note of K_{OVDN} from 'Overload injected on LVDS pad and affecting neighbor LVDS pads' to 'Overload injected on LVDS TX pad and affecting neighbor LVDS pads'
  - Change max value of K_{OVDP} from $5*10^{-4}$ to $5*10^{-3}$
  - Change note of K_{OVDP} from 'Overload injected on LVDS pad and affecting neighbor LVDS pads' to 'Overload injected on LVDS TX pad and affecting neighbor LVDS pads'
  - Change note of K_{OVDP} from '$1*10^{-5}$' to '$1.5*10^{-3}$'
  - Change max value of K_{OVAN} from $1*10^{-4}$ to $1*10^{-5}$
  - Change note of K_{OVAN} from "Analog Inputs overlaid with class slow pads or pull down diagnostics; -1mA < I_{IN} < 0mA" to "Analog Inputs overlaid with class slow pads or pull down diagnostics; -5mA < I_{IN} < 0mA"
  - Change note of K_{OVAN} from '$1*10^{-3}$' to '$1*10^{-4}$'
  - Change note of K_{OVAP} from '$1*10^{-5}$' to '$2*10^{-5}$'
  - Change note of K_{OVAP} from '$1*10^{-4}$' to '$2*10^{-4}$'
  - Add parameter I_{OUT}
- Operating Conditions
  - Change note of V_{DDM} from 'Upper voltage range' to ''
  - Change note of V_{DDM} from 'Lower voltage range' to ''
  - Change note of V_{EVRSB} from 'V_{EVRSB} is bonded together with V_{EXT} supply pin in smaller LQFP packages.' to ''
- Changes in table '$\overline{\text{PORST}}$ Pad' of Standard Pads
  - Change note of HYS from 'non of the neighbor pads are used as output; TTL' to 'non of the neighbor pads are used as output;TTL (degraded, used for CIF)'
  - Change min value of HYS from 0.1 * $V_{EXT/FLEX}$ V to 0.055 * $V_{EXT/FLEX}$ V
  - Change min value of I_{PDL} from |18| µA to |15| µA
  - Change note of HYS from 'two of the neighbor pads are used as output with driver=strong and edge=sharp; TTL' to 'two of the neighbor pads are used as output with driver=strong and edge=sharp; TTL (degraded, used for CIF)'
- Changes in table 'Fast 5V GPIO' of Standard Pads
  - Change note of HYS from '0.1 * $V_{EXT/FLEX}$ V' to '0.09 * $V_{EXT/FLEX}$ V'

Downloaded by IFXDMZlpar-zengzhe 12/02/2019 11:04:31

- Change min value of HYS from 0.09 * $V_{EXT/FLEX}$ V to 0.075 * $V_{EXT/FLEX}$ V
- Change min value of R_{DSON} from 140 Ohm to 125 Ohm
- Change typ value of R_{DSON} from 200 Ohm to 225 Ohm
- Change max value of R_{DSON} from 260 Ohm to 320 Ohm
- Change note of R_{DSON} from '35 Ohm' to '31 Ohm'
- Change note of R_{DSON} from '50 Ohm' to '55 Ohm'
- Change max value of R_{DSON} from 65 Ohm to 80 Ohm
- Change note of t_{RF} from 'C_L = 25pF; driver = strong sharp edge' to 'C_L = 25pF; driver = strong sharp edge; from 0.2 * $V_{EXT/FLEX}$ to 0.8 * $V_{EXT/FLEX}$'
- Change max value of t_{RF} from 2.8 ns to 3.2 ns
- Change min value of t_{RF} from 0.5+0.075*C_L ns to 0.5+0.08*C_L ns
- Change note of t_{RF} from '0.5+0.15*C_L ns' to '1.0+0.17*C_L ns'
- Change note of t_{RF} from '2.5+0.18*C_L ns' to '1.0+0.18*C_L ns'
- Change note of t_{RF} from '2.5+0.35*C_L ns' to '5.0+0.35*C_L ns'
- Change max value of t_{RF} from 4+0.95*C_L ns to 12+1.0*C_L ns
- Change note of I_{OZ} from '-3900 nA' to '-5000 nA'
- Change note of I_{OZ} from '-3600 nA' to '-5000 nA'
- Change note of I_{OZ} from '-6700 nA' to '-9000 nA'
- Change note of I_{OZ} from '3900 nA' to '5000 nA'
- Change max value of I_{OZ} from 3600 nA to 5000 nA
- Change note of I_{OZ} from '6700 nA' to '9000 nA'
- Change note of t_{RF} from 'C_L = 25pF; driver = strong sharp edge' to 'C_L = 25pF; driver = strong sharp edge; from 0.2 * $V_{EXT/FLEX}$ to 0.8 * $V_{EXT/FLEX}$'
- Change note of f_{IND} from '' to 'AL and TTL'
- Change note of f_{OUTD} from '' to 'medium driver'
- Change note of I_{PDL} from 'V_{IL}; AL or TTL' to 'V_{IL}; AL'

• Changes in table 'Fast 3.3V GPIO' of Standard Pads
  - Change min value of HYS from 0.065 * $V_{EXT/FLEX}$ V to 0.055 * $V_{EXT/FLEX}$ V
  - Change min value of HYS from 0.1 * $V_{EXT/FLEX}$ V to 0.09 * $V_{EXT/FLEX}$ V
  - Change min value of HYS from 0.07 * $V_{EXT/FLEX}$ V to 0.055 * $V_{EXT/FLEX}$ V
  - Change note of R_{DSON} from '140 Ohm' to '125 Ohm'
  - Change typ value of R_{DSON} from 200 Ohm to 225 Ohm
  - Change note of R_{DSON} from '300 Ohm' to '320 Ohm'
  - Change min value of R_{DSON} from 35 Ohm to 31 Ohm
  - Change typ value of R_{DSON} from 50 Ohm to 55 Ohm
  - Change max value of R_{DSON} from 77 Ohm to 80 Ohm
  - Change note of t_{RF} from 'C_L = 25pF; driver = strong sharp edge' to 'C_L = 25pF; driver = strong sharp edge; from 0.2 * $V_{EXT/FLEX}$ to 0.8 * $V_{EXT/FLEX}$'
  - Change min value of t_{RF} from 2 ns to 1.6 ns
  - Change note of t_{RF} from '0.75+0.15*C_L ns' to '2.5+0.21*C_L ns'
  - Change min value of t_{RF} from 4+0.57*C_L ns to 2+0.57*C_L ns
  - Change note of t_{RF} from '1.5+0.38*C_L ns' to '8+0.4*C_L ns'

Downloaded by IFXDMZ|par-zengzhe 12/02/2019 11:04:31

  - Change note of t_{RF} from '7+1.1*C_L ns' to '10+1.25*C_L ns'
  - Change note of I_{PUH} from '|19| µA' to '|17| µA'
  - Change min value of I_{PUH} from |9| µA to |11| µA
  - Change min value of I_{PDL} from |18| µA to |15| µA
  - Change min value of I_{OZ} from -4100 nA to -5000 nA
  - Change note of I_{OZ} from '-3600 nA' to '-5000 nA'
  - Change note of I_{OZ} from '-6700 nA' to '-9000 nA'
  - Change note of I_{OZ} from '4100 nA' to '5000 nA'
  - Change max value of I_{OZ} from 3600 nA to 5000 nA
  - Change note of I_{OZ} from '6700 nA' to '9000 nA'
  - Change note of t_{RF} from 'C_L = 25pF; driver = strong sharp edge' to 'C_L = 25pF; driver = strong sharp edge; from 0.2 * $V_{EXT/FLEX}$ to 0.8 * $V_{EXT/FLEX}$'
  - Change note of f_{OUTD} from '' to 'medium driver'
- Changes in table 'Slow 5V GPIO' of Standard Pads
  - Change note of HYS from '0.1 * $V_{EXT/FLEX}$ V' to '0.09 * $V_{EXT/FLEX}$ V'
  - Change note of HYS from '0.09 * $V_{EXT/FLEX}$ V' to '0.075 * $V_{EXT/FLEX}$ V'
  - Change min value of R_{DSON} from 140 Ohm to 125 Ohm
  - Change typ value of R_{DSON} from 200 Ohm to 225 Ohm
  - Change note of R_{DSON} from '260 Ohm' to '320 Ohm'
  - Change max value of t_{RF} from 3.5+0.55*C_L ns to 7+0.55*C_L ns
  - Change note of t_{RF} from '4+0.95*C_L ns' to '12+1*C_L ns'
  - Change note of I_{PUH} from 'V_{IH}; AL or TTL' to 'V_{IH}; AL or TTL; exept VGATE1P and T_J > 150°C'
  - Change note of I_{PUH} from 'V_{IL}; AL or TTL' to 'V_{IL}; AL or TTL; exept VGATE1P and T_J > 150°C'
  - Change note of I_{PDL} from 'V_{IL}; AL or TTL' to 'V_{IL}; AL'
- Changes in table 'Slow 3.3V GPIO' of Standard Pads
  - Change note of HYS from '0.1 * $V_{EXT/FLEX}$ V' to '0.09 * $V_{EXT/FLEX}$ V'
  - Change min value of HYS from 0.065 * $V_{EXT/FLEX}$ V to 0.055 * $V_{EXT/FLEX}$ V
  - Change min value of HYS from 0.07 * $V_{EXT/FLEX}$ V to 0.055 * $V_{EXT/FLEX}$ V
  - Change min value of R_{DSON} from 140 Ohm to 125 Ohm
  - Change typ value of R_{DSON} from 200 Ohm to 225 Ohm
  - Change note of R_{DSON} from '300 Ohm' to '320 Ohm'
  - Change note of t_{RF} from '4+0.57*C_L ns' to '2+0.57*C_L ns'
  - Change max value of t_{RF} from 7+1.1*C_L ns to 10+1.25*C_L ns
  - Change note of I_{PUH} from 'V_{IH}; AL and TTL (degraded, used for CIF)' to 'V_{IH}; AL and TTL (degraded, used for CIF); exept VGATE1P and T_J > 150°C'
  - Change min value of I_{PUH} from |19| µA to |17| µA
  - Change note of I_{PUH} from 'V_{IH}; TTL' to 'V_{IH}; TTL; exept VGATE1P and T_J > 150°C'
  - Change min value of I_{PUH} from |9| µA to |11| µA
  - Change note of I_{PDL} from '|18| µA' to '|15| µA'
  - Change note of I_{PUH} from 'V_{IL}; AL and TTL and TTL (degraded, used for CIF)' to 'V_{IL}; AL and TTL and TTL (degraded, used for CIF); exept VGATE1P and T_J > 150°C'
  - Change note of f_{OUTD} from '' to 'medium driver'

Downloaded by IFXDMZ|par-zengzhe 12/02/2019 11:04:31

- Changes in table 'Class S 5V' of Standard Pads
  - Change note of HYS from '0.1 * $V_{EXT/FLEX}$ V' to '0.09 * $V_{EXT/FLEX}$ V'
  - Change min value of HYS from 0.09 * $V_{EXT/FLEX}$ V to 0.075 * $V_{EXT/FLEX}$ V
  - Change note of I_{PDL} from 'V_{IL}; AL or TTL' to 'V_{IL}; AL'
  - Change note of I_{OZ} from 'T_J ≤ 150°C; PDD option available, or AltRef option available and EDSADC channel connected or AN70 or AN71' to 'T_J ≤ 150°C; PDD option available, or AltRef option available and EDSADC channel connected, or two EDSADC channels connected'
- Changes in table 'RFast 3.3V pad' of Standard Pads
  - Change note of HYS from '0.065 * $V_{EXT/FLEX}$ V' to '0.055 * $V_{EXT/FLEX}$ V'
  - Change note of HYS from '0.1 * $V_{EXT/FLEX}$ V' to '0.09 * $V_{EXT/FLEX}$ V'
  - Change note of HYS from '0.07 * $V_{EXT/FLEX}$ V' to '0.055 * $V_{EXT/FLEX}$ V'
  - Change min value of R_{DSON} from 140 Ohm to 125 Ohm
  - Change note of R_{DSON} from '200 Ohm' to '225 Ohm'
  - Change note of R_{DSON} from '300 Ohm' to '320 Ohm'
  - Change min value of R_{DSON} from 35 Ohm to 31 Ohm
  - Change typ value of R_{DSON} from 50 Ohm to 55 Ohm
  - Change max value of R_{DSON} from 77 Ohm to 80 Ohm
  - Change min value of R_{DSON} from 10 Ohm to 8 Ohm
  - Change note of t_{RF} from 'C_L = 25pF; driver = strong sharp edge' to 'C_L = 25pF; driver = strong sharp edge; from 0.2 * $V_{EXT/FLEX}$ to 0.8 * $V_{EXT/FLEX}$'
  - Change min value of t_{RF} from 2 ns to 1.6 ns
  - Change min value of t_{RF} from 4+0.57*C_L ns to 2+0.57*C_L ns
  - Change note of t_{RF} from '0.75+0.15*C_L ns' to '2.5+0.21*C_L ns'
  - Change max value of t_{RF} from 1.5+0.38*C_L ns to 8+0.4*C_L ns
  - Change note of t_{RF} from '7+1.1*C_L ns' to '10+1.25*C_L ns'
  - Change min value of I_{PUH} from |19| µA to |17| µA
  - Change note of I_{PUH} from '|9| µA' to '|11| µA'
  - Change note of I_{PDL} from '|18| µA' to '|15| µA'
  - Change note of t_{RF} from 'C_L = 25pF; driver = strong sharp edge' to 'C_L = 25pF; driver = strong sharp edge; from 0.2 * $V_{EXT/FLEX}$ to 0.8 * $V_{EXT/FLEX}$'
  - Change note of f_{OUTD} from '' to 'medium driver'
- Changes in table 'RFast 5V GPIO' of Standard Pads
  - Change min value of HYS from 0.1 * $V_{EXT/FLEX}$ V to 0.09 * $V_{EXT/FLEX}$ V
  - Change note of HYS from '0.09 * $V_{EXT/FLEX}$ V' to '0.075 * $V_{EXT/FLEX}$ V'
  - Change min value of R_{DSON} from 140 Ohm to 125 Ohm
  - Change note of R_{DSON} from '260 Ohm' to '320 Ohm'
  - Change note of R_{DSON} from '200 Ohm' to '225 Ohm'
  - Change note of R_{DSON} from '35 Ohm' to '31 Ohm'
  - Change max value of R_{DSON} from 65 Ohm to 80 Ohm
  - Change note of R_{DSON} from '50 Ohm' to '55 Ohm'
  - Change min value of t_{RF} from 2.5+0.18*C_L ns to 1.0+0.18*C_L ns
  - Change note of t_{RF} from "C_L = 25pF; driver = strong sharp edge" to "C_L = 25pF; driver = strong sharp edge; from 0.2 * $V_{EXT/FLEX}$ to 0.8 * $V_{EXT/FLEX}$"

Downloaded by IFXDMZ|par-zengzhe 12/02/2019 11:04:31

  - Change note of t_{RF} from '2.8 ns' to '3.2 ns'
  - Change note of t_{RF} from '0.5+0.075*C_L ns' to '0.5+0.08*C_L ns'
  - Change max value of t_{RF} from 0.5+0.15*C_L ns to 1.0+0.17*C_L ns
  - Change note of t_{RF} from '4+0.95*C_L ns' to '12+1.0*C_L ns'
  - Change max value of t_{RF} from 2.5+0.35*C_L ns to 5.0+0.35*C_L ns
  - Change note of t_{RF} from 'C_L = 25pF; driver = strong sharp edge' to 'C_L = 25pF; driver = strong sharp edge; from 0.2 * $V_{EXT/FLEX}$ to 0.8 * $V_{EXT/FLEX}$'
  - Change note of f_{IND} from '' to 'AL and TTL'
  - Change note of f_{OUTD} from '' to 'medium driver'
  - Change note of I_{PDL} from 'V_{IL}; AL or TTL' to 'V_{IL}; AL'
- Changes in table 'Class D' of Standard Pads
  - Update footnote of *Standard Pads* to 'For AN11 200 nA need to be added.'
  - Change note of I_{OZ} from 'T_J ≤ 150°C; PDD option available, or AltRef option available and EDSADC channel connected' to 'T_J ≤ 150°C; PDD option available, or AltRef option available and EDSADC channel connected, or two EDSADC channels connected'
- Changes in table 'LVDS - IEEE standard LVDS general purpose link (GPL)' of LVDS Pads
  - Change max value of t_{rise20} from 0.5 ns to 0.75 ns
  - Change max value of t_{fall20} from 0.5 ns to 0.75 ns
  - Change max value of V_{OD} from 450 mV to 500 mV
  - Change min value of V_{OD} from 360 mV to 380 mV
- VADC 5V
  - Change max value of dV_{CSD} from 20 % to 10 %
  - Change note of dV_{CSD} from '-20 %' to '-10 %'
  - Change note of f_{ADCI} from 'Upper voltage range' to '4.5V ≤ V_{DDM} ≤ 5.5V'
  - Change note of t_{SCAL} from 'Upper voltage range' to '4.5V ≤ V_{DDM} ≤ 5.5V'
  - Change note of f_{ADCI} from 'Lower voltage range' to '2.97V ≤ V_{DDM} < 4.5V'
  - Change note of t_S from 'Primary group or fast compare channel, upper voltage range; input buffer disabled' to 'Primary group or fast compare channel, 4.5V ≤ V_{DDM} ≤ 5.5V; input buffer disabled'
  - Change note of t_{SCAL} from 'Lower voltage range' to '2.97V ≤ V_{DDM} < 4.5V'
  - Change note of t_S from 'Primary group or fast compare channel, upper voltage range; input buffer enabled' to 'Primary group or fast compare channel, 4.5V ≤ V_{DDM} ≤ 5.5V; input buffer enabled'
  - Change note of t_S from 'Secondary group, upper voltage range; input buffer disabled' to 'Secondary group, 4.5V ≤ V_{DDM} ≤ 5.5V; input buffer disabled'
  - Change note of t_S from 'Secondary group, upper voltage range; input buffer enabled' to 'Secondary group, 4.5V ≤ V_{DDM} ≤ 5.5V; input buffer enabled'
  - Change note of t_S from 'Primary Group or fast compare channel, lower voltage range; input buffer disabled' to 'Primary Group or fast compare channel, 2.97V ≤ V_{DDM} < 4.5V; input buffer disabled'
  - Change note of t_S from 'Primary group or fast compare channel, lower voltage range; input buffer enabled' to 'Primary group or fast compare channel, 2.97V ≤ V_{DDM} < 4.5V; input buffer enabled'
  - Change note of t_S from 'Secondary group, lower voltage range; input buffer disabled' to 'Secondary group, 2.97V ≤ V_{DDM} < 4.5V; input buffer disabled'
  - Change note of t_S from 'Secondary group, lower voltage range; input buffer enabled' to 'Secondary group, 2.97V ≤ V_{DDM} < 4.5V; input buffer enabled'
- DSADC 5V

Downloaded by IFXDMZlpar-zengzhe 12/02/2019 11:04:31

  - Update wording in front of table DSADC 5V
  - Change note of *DCF* from '10^{-5} f_D, offset compensation filter enabled (FCFGMx.OEN = 001_B)' to '10^{-5} f_D, offset compensation filter enabled (FCFGMx.OCEN = 001_B)'
- OSC_XTAL
  - Change note of C_{L1} from '2.35 pF' to '3.35 pF'
  - Add parameter C_{XTAL1}
- Changes in table 'DTS PMS' of DTS
  - Change max value of t_M from 2.6 ms to 2.7 ms
- Add table 'DTS Core'
- Current Consumption
  - Change max value of I_{DDRAIL} from 1370 mA to 1372 mA
  - Change T_J in real power pattern definition from 150°C to 160°C
- Changes in table 'Module Core Current Consumption' of Current Consumption
  - Change name of *Module Core Current Consumption* from Module Core Current Concumption to Module Core Current Consumption
  - Change note of I_{DDCx0} from 'real power pattern' to 'real power pattern; IPC=0.6'
  - Change max value of I_{DDCx0} from 40 mA to 45 mA
  - Change note of I_{DDCx0} from "max power pattern" to "max power pattern; IPC=1.2"
  - Change note of I_{DDCx0} from '60 mA' to '70 mA'
  - Change note of I_{DDCxx} from "max power pattern" to "max power pattern; IPC=1.2"
  - Change note of I_{DDCxx} from 'I_{DDCx0} + 60 mA' to 'I_{DDCx0} + 50 mA'
  - Change note of I_{DDGTM} from 'real power pattern; TIMx, TOMx, ATOMx , MCSx active. 5 clusters at 200 MHz.' to 'real power pattern; TIMx, TOMx, ATOMx , MCSx active. 3 clusters at 200 MHz.'
  - Change max value of I_{DDGTM} from 60 mA to 130 mA
  - Change note of I_{DDGTM} from '88 mA' to '160 mA'
  - Change note of I_{DDSPU} from "CTRL.DIV = 01 ; FFT clocked at half SPU Clock" to "CTRL.DIV = 01 ; FFT clocked at half SPU Clock; Both SPU modules are active."
  - Change note of I_{DDSPU} from '60 mA' to '70 mA'
  - Change note of I_{DDCIF} from '20 mA' to '30 mA'
  - Change note of $I_{DDMBIST}$ from '100 mA' to '200 mA'
  - Change note of I_{DDCxx} from 'real power pattern' to 'real power pattern; IPC=0.6'
  - Change note of I_{DDGTM} from 'TIMx, TOMx active at 100MHz. ATOMx , MCSx, DPLL inactive.' to 'TIMx, TOMx active at 100MHz. ATOMx , MCSx, DPLL inactive. 2 clusters at 100 MHz.'
  - Change max value of I_{DDGTM} from 20 mA to 60 mA
  - Change note of $I_{EXTRAIL}$ from '58 mA' to '54 mA'
  - Change max value of $I_{EXTRAIL}$ from t.b.d mA to 60 mA
  - Change max value of $I_{EXTFLEX}$ from 30 mA to 22 mA
- Changes in table 'Module Current Consumption' of Current Consumption
  - Change max value of $I_{EXTLVDS}$ from t.b.d mA to 20 mA
  - Change max value of I_{SCRSB} from 4 mA to 6.5 mA
  - Change description of I_{SCRSB} from 'SCR 8-bit Standby Controller in STANDBY Mode drawn at V_{EVRSB} supply pin' to 'SCR 8-bit Standby Controller current incl. PMS in STANDBY Mode drawn at V_{EVRSB} supply pin'

Downloaded by IFXDMZ|par-zengzhe 12/02/2019 11:04:31

- Change note of I_{SCRSB} from 'SCR power pattern; f_{SYS_SCR} = 20MHz; T_J=150°C' to 'SCR power pattern incl. PMS current consumption with fback clock active; f_{SYS_SCR} = 20MHz; T_J=150°C'
- Change note of I_{SCRSB} from 'real power pattern; fSYS_SCR = 70kHz; T_J=25°C' to 'SCR power pattern incl. PMS current consumption with fback inactive; fSYS_SCR = 70kHz; T_J=25°C'
- Change typ value of I_{SCRSB} from 0.025 mA to 0.190 mA
- Change description of I_{SCRSB} from 'SCR 8-bit Standby Controller in STANDBY Mode drawn at V_{EVRSB} supply pin' to 'SCR 8-bit Standby Controller current incl. PMS in STANDBY Mode drawn at V_{EVRSB} supply pin'
- Change note of I_{DDM} from "real power pattern ; current for EDSADC module only; 11 EDSADC channels active." to "real power pattern; current for EDSADC modules only and EVADC modules are inactive; 11 EDSADC channels active continuously."
- Change note of I_{DDM} from '66 mA' to '44 mA'
- Change note of I_{DDM} from 'max power pattern; All EDSADC channels active 100% time.' to 'max power pattern; current for EDSADC modules only and EVADC modules are inactive; all EDSADC channels active continuously.'
- Change max value of I_{DDM} from 84 mA to 63 mA
- Change note of I_{DDM} from 'real pattern;12 EVADC modules active' to 'real power pattern; current for EVADC modules only and EDSADC modules are inactive; 12 EVADC modules active.'
- Change note of I_{DDM} from 'max power pattern; All EVADC modules are active 100% time' to 'max power pattern; current for EVADC modules only and EDSADC modules are inactive; all EVADC modules active.'
- Change max value of I_{DDM} from 26 mA to 20 mA
- Change max value of I_{DDM} from 82 mA to 60 mA
- Change max value of I_{DDTOT} from 1506 mA to 1536 mA
- Change note of $I_{DDTOTDC3}$ from 'real power pattern; V_{EXT} = 3.3V; T_J=160°C' to 'real power pattern; EVRC reset settings with 72% efficiency; V_{EXT} = 3.3V; T_J=160°C'
- Change max value of $I_{DDTOTDC3}$ from 830 mA to 980 mA
- Change description of $I_{DDTOTDC3}$ from '∑ Sum of all currents with DC-DC EVR13 regulator active' to '∑ Sum of all currents with DC-DC EVRC regulator active'
- Change note of $I_{DDTOTDC5}$ from 'real power pattern; V_{EXT} = 5V; T_J=160°C' to 'real power pattern; EVRC reset settings with 72% efficiency; V_{EXT} = 5V; T_J=160°C'
- Change max value of $I_{DDTOTDC5}$ from 600 mA to 670 mA
- Change description of $I_{DDTOTDC5}$ from '∑ Sum of all currents with DC-DC EVR13 regulator active' to '∑ Sum of all currents with DC-DC EVRC regulator active'
- Change note of I_{SLEEP} from '10 mA' to '25 mA'
- Change note of PD from 't.b.d. mW' to '3220 mW'
- Change max value of PD from 2560 mW to 2500 mW
- Change max value of I_{EVRSB} from 4 mA to 8 mA
- Change note of I_{EVRSB} from 'real power pattern; PMS/EVR module current considered without SCR and Standby RAM' to 'real power pattern; PMS/EVR module current considered without SCR and Standby RAM during RUN mode.'
- Change max value of I_{DDTOT} from 1690 mA to 1720 mA

• Reset
  - Change min value of t_{POH} from 100 ns to 150 ns
  - Change note of t_{BP} from 'dV/dT=1V/ms. including EVR ramp-up and Firmware execution time; RAM initialization and HSM boot time is not included' to '$dVEXT/dT$=1V/ms. $VEXT$>$VLVDRST5$. Boot time after

Downloaded by IFXDMZ|par-zengzhe 12/02/2019 11:04:31

Cold PORST including EVR ramp-up and Firmware execution time; RAM initialization and HSM boot time are not included.'

  - Change note of t_B from 'operating with max. frequencies' to 'operating with max. frequencies, with valid BMI header'
  - Change note of t_{BS} from '' to 'RAM initialization and HSM boot time are not included, with valid BMI header'
  - Change note of t_{BP} from 'Firmware execution time; without EVR ramp-up; RAM initialization and HSM boot time is not included' to 'Firmware execution time after warm PORST without EVR ramp-up; RAM initialization and HSM boot time is not included'
  - Change type of t_{POA} from CC to SR
  - Change description of t_{POA} from 'Minimum PORST active hold time externally after power supplies are stable at operating levels' to 'Minimum PORST active hold time externally after power supplies are stable at operating levels after start-up'
- PMS/EVR33 LDO
  - Change note of $dVout/dIout$ from 'Normal RUN mode; dI=10 to 60 to 100mA; dt=20ns; $Tsettle$=20us' to 'Normal RUN mode; dI=10 to 60mA; dt=20ns; $Tsettle$=20us'
  - Change note of $dVout/dIout$ from 'Normal RUN mode; dI=100 to 60 to 10mA; dt=20ns; $Tsettle$=20us' to 'Normal RUN mode; dI=60 to 10mA; dt=20ns; $Tsettle$=20us'
  - Change note of $dVout/dVin$ from '$dVin/dT$=1V/ms; dV= 5 to 3.6V' to '$dVin/dT$=1V/ms; dV= 5 to 3.6V; I_{MAX}=60mA'
  - Change note of $dVout/dVin$ from '$dVin/dT$=1V/ms; dV= 3.6 to 5V' to '$dVin/dT$=1V/ms; dV= 3.6 to 5V; I_{MAX}=60mA'
  - Change typ value of C_{OUT} from 1 µF to 2.2 µF
  - Change note of C_{OUT} from '1.35 µF' to '3 µF'
  - Change min value of C_{OUT} from 0.65 µF to 1.45 µF
  - Change min value of $dVout/dIout$ from -100 mV to -180 mV
  - Change max value of $dVout/dIout$ from 100 mV to 180 mV
  - Change note of I_{MAX} from '100 mA' to '60 mA'
  - Change note of $dVout/dVin$ from '$dVin/dT$=50V/ms; dV= 5 to 3.6V' to '$dVin/dT$=50V/ms; dV= 5 to 3.6V; I_{MAX}=60mA'
  - Change note of $dVout/dVin$ from '$dVin/dT$=50V/ms; dV= 3.6 to 5V' to '$dVin/dT$=50V/ms; dV= 3.6 to 5V; I_{MAX}=60mA'
- PMS/Supply Monitors
  - Change max value of $V_{LVDRST5}$ from 2.7 V to 2.75 V
  - Change note of $V_{LVDRST5}$ from '2.67 V' to '2.72 V'
  - Change note of V_{RST33} from 'by reset release before EVR trimming on supply ramp-up.' to 'by last cold PORST release on supply ramp-up including voltage hysteresis.'
  - Change note of V_{RSTC} from 'by reset release before trimming on supply ramp-up including 2 LSB voltage Hysteresis' to 'by last cold PORST release on supply ramp-up including voltage hysteresis.'
  - Change note of V_{RST5} from 'by reset release before trimming on supply ramp-up including 2 LSB voltage hysteresis' to 'by last cold PORST release on supply ramp-up including voltage hysteresis.'
- PMS/Supply Ramp
  - Change description of SR_V_EXT from 'External V_{EXT} & V_{EVRSB} supply ramp' to 'External V_{EXT} & V_{EVRSB} supply ramp-up and ramp-down slope'
  - Change description of SR_V_DDP3 from 'External V_{DDP3} supply ramp' to 'External V_{DDP3} supply ramp-up and ramp-down slope'

Downloaded by IFXDMZlpar-zengzhe 12/02/2019 11:04:31

  - Change description of *SR_V_DD* from 'External V_{DD} supply ramp' to 'External V_{DD} supply ramp-up and ramp-down slope'
  - Change description of *SR_V_DDM* from 'External V_{DDM} supply ramp' to 'External V_{DDM} supply ramp-up and ramp-down slope'
- Changes in table 'EVRC SMPS' of PMS/EVRC SMPS
  - Change name of *EVRC SMPS* from EVR13 SMPS to EVRC SMPS
- Changes in table 'EVRC SMPS External components' of PMS/EVRC SMPS
  - Change name of *EVRC SMPS External components* from EVR13 SMPS External components to EVRC SMPS External components
- Changes in section JTAG Parameters
  - Update figure Test Clock Timing (TCK)
- Changes in section DAP Parameters
  - Combine figures Test Clock Timing (DAP0), DAP Timing Host to Device, and DAP Timing Device to Host (DAP1 and DAP2 pins) into single figure DAP Timing
  - Add t_{14} for condition F=40MHz
  - Add t_{15} for condition F=40MHz
  - Add t_{16} for condition F=40MHz
- Changes in table 'Master Mode strong sharp (ss) output pads' of ASCLIN
  - Change min value of t_{51} from -3 ns to -3.5 ns
  - Change note of t_{51} from '3 ns' to '3.5 ns'
  - Change max value of t_{510} from 3 ns to 3.5 ns
- Changes in table 'Master Mode Timing, LVDS output pads for data and clock' of QSPI
  - Change max value of t_{51} from 3 ns to 4 ns
  - Change min value of t_{52} from 17 ns to 18 ns
- Changes in table 'Strong sharp (ss) driver for clock/data valid for 5V' of MSC
  - Change note of t_{45} from '-3 ns' to '-4 ns'
  - Change min value of t_{44} from -3 ns to -4 ns
- Changes in table 'ETH RGMII Signal Timing Parameters valid for 3.3V' of Ethernet
  - Add parameter t_{21}
- Changes in table 'ETH RMII Signal Timing Parameters valid for 3.3V' of Ethernet
  - Change description of t_{16} from 'ETHTXEN, ETHTXD[1:0], ETHRXD[1:0], ETHCRSDV, ETHRXER; setup time' to 'ETHTXEN, ETHTXD[1:0], ETHRXD[1:0], ETHCRSDV; setup time'
  - Change description of t_{17} from 'ETHTXEN, ETHTXD[1:0], ETHRXD[1:0], ETHCRSDV, ETHRXER; hold time' to 'ETHTXEN, ETHTXD[1:0], ETHRXD[1:0], ETHCRSDV; hold time'
- Changes in table 'HSCT - Rx/Tx setup timing' of LVDS Pads
  - Change max value of t_{tx} from 250 ns to 280 ns
- Removed section CIF
- SDMMC
  - Change note of t_5 from 'C_L ≤ 30pF' to 'C_L ≤ 30pF, V_{EXT} = 3.3V'
  - Change min value of t_5 from -3 ns to 3 ns
  - Change description of t_5 from 'Data output delay time' to 'Data output valid time before rising clock edge'
  - Change note of t_6 from "C_L ≤ 30pF" to "C_L ≤ 30pF, V_{EXT} = 3.3V"
  - Change note of t_6 from 'max' to 'min'

Downloaded by IFXDMZ|par-zengzhe 12/02/2019 11:04:31

  - Change note of t_6 from '13,7 ns' to '3 ns'
  - Change description of t_6 from 'Data input delay time' to 'Data output valid time after rising clock edge'
  - Change description of t_8 from 'Output hold time' to 'Data Input delay time'
  - Add parameter t_9
  - Change note of t_1 from 'push-pull, C_L ≤ 30pF, tolerance ± 100kHz' to 'push-pull, C_L ≤ 30pF, V_{EXT} = 3.3V'
  - Change predicate of t_1 from max to min
  - Change note of t_2 from 'open-drain, C_L ≤ 30pF, tolerance ± 20kHz' to 'open-drain, C_L ≤ 30pF, V_{EXT} = 3.3V'
  - Change note of t_3 from 'C_L ≤ 30pF' to 'C_L ≤ 30pF, V_{EXT} = 3.3V'
  - Change note of t_4 from 'C_L ≤ 30pF' to 'C_L ≤ 30pF, V_{EXT} = 3.3V'
  - Change note of t_7 from 'C_L ≤ 30pF' to 'C_L ≤ 30pF, V_{EXT} = 3.3V, TTL levels'
- Flash
  - Change note of t_{ER_Dev} from '' to 'Valid for less than 1000 cycles, w/o UCB. Derived value for documentation purpose.'
  - Change note of t_{ER_Dev} from 'Derived value for documentation purpose' to 'Valid for less than 1000 cycles, w/o UCB. Derived value for documentation purpose.'
- ED Current Consumption
  - Change max value of I_{DDSB} from 8 mA to 15 mA
  - Change note of I_{DDSB} from '27 mA' to '34 mA'
- Package Parameters
  - Update table Thermal Characteristics of the Package
  - Change package type from PG-LFBGA-516-9 to PG-LFBGA-516-10
  - Change package type from PG-LFBGA-292-9 to PG-LFBGA-292-10

4.2 Changes from Version 0.6 to Version 0.7

- Added preamble to AGBT stating that AGBT is lab-only interface without full test coverage
- Changes in table "Absolute Maximum Ratings"
  - Change value of Parameter "VDDM"
  - Change value of Parameter "VIN"
  - Change value of Parameter "VIN"
- Changes in table "Master Mode strong sharp (ss) output pads"
  - Change value of Parameter "t51"
  - Change value of Parameter "t510"
- Changes in table "Current Consumption"
  - Change condition of Parameter "IDDPORST"
  - Change value of Parameter "IDDRAIL"
  - Change value of Parameter "IEVRSB"
  - Change value of Parameter "IEXTFLEX"
  - Change value of Parameter "ISLEEP"
  - Change condition of Parameter "ISTANDBY"
  - Change value of Parameter "ISTANDBY"
  - Change of Parameter "IDDRAIL" description

Downloaded by IFXDMZlpar-zengzhe 12/02/2019 11:04:31

  - Footnote added to Parameter "IDDP3RAIL"
  - Footnote added to Parameter "IEXTFLEX"
  - Footnote added to Parameter "IEVRSB"
  - Footnote added to Parameter "ISLEEP"
- Changes in table "Module Core Current Consumption"
  - Change condition of Parameter "IDDLBIST"
  - Change value of Parameter "IDDLBIST"
  - Footnote added to Parameter "IDDLBIST"
  - Change condition of Parameter "IDDMBIST"
  - Change value of Parameter "IDDMBIST"
  - Change condition of Parameter "IDDSPU1"
  - Change value of Parameter "IDDSPU1"
  - Change value of Parameter "IDDSPULJ1"
  - Parameter "IDDCIF" deleted
  - New Parameter "IDDSPU2" added
  - New Parameter "IDDSPULJ1" added
  - New Parameter "IDDSPULJ2" added
- Changes in table "Module Current Consumption"
  - Change value of Parameter "IDDP3PROG"
  - Change value of Parameter "ISCRIDLE"
  - Change condition of Parameter "ISCRSB"
  - Change value of Parameter "ISCRSB"
  - Footnote added to Parameter "IEXTLVDS"
  - New Parameter "IDDP3ERASE" added
- Changes in table "DSADC 5V"
  - Change preamble
  - Change value of Parameter "EDGAIN"
  - Change value of Parameter "EDOFF"
  - Change value of Parameter "IREF"
  - Change value of Parameter "IRMS"
  - Change of Parameter "IREF" description
  - Footnote added to Parameter "IRMS"
  - Footnote added to Parameter "EDGAIN"
  - Footnote added to Parameter "EDOFF"
  - Footnote added to Parameter "SNR"
  - Footnote added to Parameter "SFDR"
- Changes in table "DTS PMS"
  - Change value of Parameter "tM"
- Changes in table "ED Current Consumption"
  - Change value of Parameter "IEXTAGBT"
  - Parameter "VDDAGBT" deleted
  - Footnote changed of Parameter "VDDEEC"

Downloaded by IFXDMZlpar-zengzhe 12/02/2019 11:04:31

- Changes in table "Transmit Parameters"
  - Change of Parameter "tdCCxEN10" description
- Changes in table "EVR33 LDO"
  - Change value of Parameter "IMAX"
  - Change condition of Parameter "VinVoutRatio"
  - Change value of Parameter "VinVoutRatio"
  - Change condition of Parameter "VoutIOutRatio"
  - Change value of Parameter "VoutIOutRatio"
  - Change condition of Parameter "tSTR"
  - New Parameter "dVOUTTC" added
- Changes in table "EVRC SMPS"
  - Change value of Parameter "dVDDDC"
  - Change condition of Parameter "fDCDC"
- Changes in table "Flash"
  - Change condition of Parameter "NE_EEP10S"
  - Change condition of Parameter "NE_HSMS"
- Changes in table "HSCT - Rx/Tx setup timing"
  - Change value of Parameter "ttx"
- Changes in table "LVDS - IEEE standard LVDS general purpose link (GPL)"
  - Change condition of Parameter "Rin"
  - Change value of Parameter "VOD"
  - Change value of Parameter "tfall20"
  - Change value of Parameter "trise20"
  - New Parameter "tSET" added
  - Corrected “LVDSH” to “LVDS”
- Changes in table "LVDS clock/data (LVDS pads in LVDS mode) valid for 5V"
  - Change condition of Parameter "t40"
  - Change condition of Parameter "t400"
- Changes in table "Strong sharp (ss) driver for clock/data valid for 5V"
  - Change value of Parameter "t44"
  - Change value of Parameter "t45"
- Changes in table "Operating Conditions"
  - Change condition of Parameter "TA"
- Changes in table "OSC_XTAL"
  - New Parameter "IHBX" added
  - Change value of Parameter "CXTAL1"
  - Remove Parameter VILBX
- Changes in table "Overload"
  - Change condition of Parameter "IINANA"
  - Parameter "IID" deleted
- Changes in table "Package Parameters"
  - Change value of Parameter "RTH_JA"

Downloaded by IFXDMZlpar-zengzhe 12/02/2019 11:04:31

  - Change value of Parameter "RTH_JCB"
  - Change value of Parameter "RTH_JCT"
- Changes in table "PLL Peripheral"
  - Change condition of Parameter "DP"
  - Change condition of Parameter "DRMS"
  - Change value of Parameter "DPP"
  - Change Parameter description of "DPP"
  - New Parameter "JABS25" added
  - New Parameter "DPPI" added
- Changes in table "Master Mode Timing, LVDS output pads for data and clock"
  - Change value of Parameter "t51"
  - Change value of Parameter "t52"
- Changes in table "Quality"
  - Change of Parameter "VHBM1" description
  - Footnote added to Parameter "VCCM"
  - Footnote added to Parameter "VHBM"
- Changes in table "Reset"
  - Change condition of Parameter "tB"
  - Change value of Parameter "tB"
  - Change condition of Parameter "tBP"
  - Change value of Parameter "tBS"
  - Change value of Parameter "tBWP"
  - Change condition of Parameter "tLBIST"
  - Footnote added to Parameter "tBP"
  - Change of Parameter "tBP" description
  - Change of Parameter "tLBIST" description
- Changes in table "SDMMC"
  - Change condition of Parameter "t1"
  - Change condition of Parameter "t2"
  - Change condition of Parameter "t3"
  - Change condition of Parameter "t4"
  - Change condition of Parameter "t5"
  - Change value of Parameter "t5"
  - Change condition of Parameter "t6"
  - Change value of Parameter "t6"
  - Change condition of Parameter "t7"
- Changes in table "PORST pad"
  - Change condition of Parameter "IOZ"
  - Change value of Parameter "HYS"
- Changes in table "Class D"
  - Change condition of Parameter "IOZ"
  - Change value of Parameter "IOZ"

Downloaded by IFXDMZ|par-zengzhe 12/02/2019 11:04:31

- Changes in table "Fast 3.3V GPIO"
  - Footnote changed of parameter “tRF”
  - Change value of Parameter "HYS"
  - Change condition of Parameter "IOZ"
  - Change value of Parameter "IOZ"
  - Change value of Parameter "VIH"
  - Change value of Parameter "VIL"
  - Change condition of Parameter "tRF"
  - Footnote added to Parameter "tRF"
  - Change of Parameter "tSET" description
  - Change condition of Parameter "VILD"
- Changes in table "Fast 5V GPIO"
  - Footnote changed of parameter “tRF”
  - Change value of Parameter "HYS"
  - Change condition of Parameter "IOZ"
  - Change value of Parameter "IOZ"
  - Change value of Parameter "VIH"
  - Change value of Parameter "VIL"
  - Change condition of Parameter "tRF"
  - Footnote added to Parameter "tRF"
  - Change of Parameter "tSET" description
  - Change condition of Parameter "VILD"
- Changes in table "RFast 3.3V pad"
  - Footnote changed of parameter “tRF”
  - Change value of Parameter "VIL"
  - Footnote added to Parameter "tRF"
  - Change of Parameter "tSET" description
  - Change condition of Parameter "tRF"
  - Change value of Parameter "HYS"
  - Change condition of Parameter "IOZ"
  - Change value of Parameter "VIH"
  - Change condition of Parameter "VILD"
- Changes in table "RFast 5V pad"
  - Footnote changed of parameter “tRF”
  - Footnote added to Parameter "tRF"
  - Change of Parameter "tSET" description
  - Change condition of Parameter "tRF"
  - Change value of Parameter "HYS"
  - Change condition of Parameter "IOZ"
  - Change value of Parameter "VIH"
  - Change condition of Parameter "VILD"
- Changes in table "Slow 3.3V GPIO"

Downloaded by IFXDMZ|par-zengzhe 12/02/2019 11:04:31

  - Footnote changed of parameter “tRF”
  - Change value of Parameter "HYS"
  - Change condition of Parameter "IOZ"
  - Change value of Parameter "IOZ"
  - Change condition of Parameter "IPUH"
  - Change value of Parameter "VIH"
  - Change value of Parameter "VIL"
  - Footnote added to Parameter "tRF"
  - Change of Parameter "tSET" description
  - Change condition of Parameter "VILD"
- Changes in table "Slow 5V GPIO"
  - Footnote changed of parameter “tRF”
  - Change value of Parameter "HYS"
  - Change condition of Parameter "IOZ"
  - Change value of Parameter "IOZ"
  - Change condition of Parameter "IPUH"
  - Change value of Parameter "VIH"
  - Change value of Parameter "VIL"
  - Footnote added to Parameter "tRF"
  - Change of Parameter "tSET" description
  - Change condition of Parameter "VILD"
- Changes in table "Class S 5V"
  - Change condition of Parameter "IOZ"
  - Change value of Parameter "HYS"
  - Change value of Parameter "IOZ"
  - Change of Parameter "tSET" description
  - Change value of Parameter "VIH"
  - Change value of Parameter "VIL"
- Changes in table "ADC Reference Pads"
  - Change condition of Parameter "IOZ2"
  - Change value of Parameter "IOZ2"
  - Footnote added to Parameter “IOZ2”
- Changes in table "Supply Monitors"
  - Change condition of Parameter "VDDMON"
  - Change condition of Parameter "VDDP3MON"
  - Change condition of Parameter "VEXTMON"
  - Change condition of Parameter "VRST33"
  - Change condition of Parameter "VRST5"
  - Change condition of Parameter "VRSTC"
  - Change value of Parameter "VRSTC"
  - Change condition of Parameter "tMON"
  - Footnote added to Parameter "VEXTMON"

Downloaded by IFXDMZ|par-zengzhe 12/02/2019 11:04:31

- Changes in table "Back-up Clock"
  - Footnote change in Parameter "fBACKT"
- Changes in table "DTS Core"
  - New Parameter "dT" added
- Changes in table "VADC 5V"
  - Changed preamble
  - Change condition of Parameter "RPDD"
  - Change condition of Parameter "VDDK"
  - Change condition of Parameter "fADCI"
  - Change condition of Parameter "tS"
  - Change condition of Parameter "tSCAL"
  - New Parameter "VDDK" added
  - New Parameter "dVDDK" added
  - Footnote added to Parameter "QCONV"

4.3 Changes from Version 0.7 to Version 1.0

- Changes in table “Platform Feature Overview”
  - Removed feature for “ASIL”
- Changes in chapter “Pin Definition and Functions”
  - Changed naming from “BGA516” to “LFBGA-516”
  - Changed figure for “LFBGA-516”
  - Changed naming from “BGA292” to “LFBGA-292”
  - Changed figure for “LFBGA-292”
  - Changed naming from “BGA292 ADAS feature set” to “LFBGA-292 ADAS feature set”
  - Changed figure for “LFBGA-292 ADAS feature set”
- Changes in chapter 'TC39x Pin Definition and Functions' for package variant LFBGA-516
  - Changes in LFBGA-516 Package Variant 'Port 00 Functions' table; P00.0, P00.1, P00.2, P00.3, P00.4, P00.5, P00.11, P00.12
  - Changes in LFBGA-516 Package Variant 'Port 01 Functions' table; P01.0, P01.2, P01.3, P01.4, P01.8, P01.13
  - Changes in LFBGA-516 Package Variant 'Port 02 Functions' table; P02.0, P02.1, P02.2, P02.3, P02.4, P02.5, P02.8, P02.9, P02.10, P02.13, P02.14
  - Changes in LFBGA-516 Package Variant 'Port 10 Functions' table; P10.2, P10.3, P10.5, P10.6, P10.7, P10.8
  - Changes in LFBGA-516 Package Variant 'Port 11 Functions' table; P11.0, P11.1, P11.4, P11.5, P11.7, P11.8, P11.10, P11.12, P11.13, P11.14
  - Changes in LFBGA-516 Package Variant 'Port 12 Functions' table; P12.0, P12.1
  - Changes in LFBGA-516 Package Variant 'Port 13 Functions' table; P13.0, P13.1, P13.2, P13.4, P13.5, P13.9, P13.12
  - Changes in LFBGA-516 Package Variant 'Port 14 Functions' table; P14.0, P14.1, P14.6, P14.7, P14.8, P14.9, P14.10, P14.13, P14.14, P14.15

Downloaded by IFXDMZ|par-zengzhe 12/02/2019 11:04:31

  - Changes in LFBGA-516 Package Variant 'Port 15 Functions' table; P15.0, P15.1, P15.2, P15.3, P15.4, P15.5
  - Changes in LFBGA-516 Package Variant 'Port 20 Functions' table; P20.0, P20.3, P20.6, P20.7, P20.8, P20.9, P20.10
  - Changes in LFBGA-516 Package Variant 'Port 21 Functions' table; P21.0, P21.1, P21.2, P21.3, P21.4, P21.5
  - Changes in LFBGA-516 Package Variant 'Port 22 Functions' table; P22.2, P22.3, P22.4, P22.5, P22.6, P22.7, P22.8, P22.9, P22.10, P22.11
  - Changes in LFBGA-516 Package Variant 'Port 23 Functions' table; P23.0, P23.1, P23.2, P23.3, P23.5, P23.6, P23.7
  - Changes in LFBGA-516 Package Variant 'Port 32 Functions' table; P32.2, P32.3, P32.4, P32.5, P32.6, P32.7
  - Changes in LFBGA-516 Package Variant 'Port 33 Functions' table; P33.0, P33.1, P33.2, P33.3, P33.4, P33.5, P33.7, P33.8, P33.9, P33.10, P33.12, P33.13
  - Changes in LFBGA-516 Package Variant 'Port 34 Functions' table; P34.1, P34.2
  - Changes in LFBGA-516 Package Variant 'Analog Inputs' table; Ball AD10, AB10
- Changes in chapter 'TC39x Pin Definition and Functions' for package variant LFBGA-292
  - Changes in LFBGA-292 Package Variant 'Port 00 Functions' table; P00.0, P00.1, P00.2, P00.3, P00.4, P00.5, P00.11, P00.12
  - Changes in LFBGA-292 Package Variant 'Port 01 Functions' table; P01.3, P01.4
  - Changes in LFBGA-292 Package Variant 'Port 02 Functions' table; P02.0, P02.1, P02.2, P02.3, P02.4, P02.5, P02.8, P02.9, P02.10
  - Changes in LFBGA-292 Package Variant 'Port 10 Functions' table; P10.2, P10.3, P10.5, P10.6, P10.7, P10.8
  - Changes in LFBGA-292 Package Variant 'Port 11 Functions' table; P11.0, P11.1, P11.4, P11.5, P11.7, P11.8, P11.10, P11.12, P11.13, P11.14
  - Changes in LFBGA-292 Package Variant 'Port 12 Functions' table; P12.0, P12.1
  - Changes in LFBGA-292 Package Variant 'Port 13 Functions' table; P13.0, P13.1, P13.2
  - Changes in LFBGA-292 Package Variant 'Port 14 Functions' table; P14.0, P14.1, P14.6, P14.7, P14.8, P14.9, P14.10
  - Changes in LFBGA-292 Package Variant 'Port 15 Functions' table; P15.0, P15.1, P15.2, P15.3, P15.4, P15.5
  - Changes in LFBGA-292 Package Variant 'Port 20 Functions' table; P20.0, P20.3, P20.6, P20.7, P20.8, P20.9, P20.10
  - Changes in LFBGA-292 Package Variant 'Port 21 Functions' table; P21.0, P21.1, P21.2, P21.3, P21.4, P21.5
  - Changes in LFBGA-292 Package Variant 'Port 22 Functions' table; P22.2, P22.3, P22.4, P22.5, P22.6, P22.7, P22.8, P22.9, P22.10, P22.11
  - Changes in LFBGA-292 Package Variant 'Port 23 Functions' table; P23.0, P23.1, P23.2, P23.3, P23.5, P23.6, P23.7
  - Changes in LFBGA-292 Package Variant 'Port 32 Functions' table; P32.2, P32.3, P32.4, P32.5, P32.6, P32.7
  - Changes in LFBGA-292 Package Variant 'Port 33 Functions' table; P33.0, P33.1, P33.2, P33.3, P33.4, P33.5, P33.7, P33.8, P33.9, P33.10, P33.12, P33.13
  - Changes in LFBGA-292 Package Variant 'Port 34 Functions' table; P34.1, P34.2

Downloaded by IFXDMZ|par-zengzhe 12/02/2019 11:04:31

  - Changes in LFBGA-292 Package Variant 'Analog Inputs' table; Ball W5, U5
- Changes in chapter 'TC39x Pin Definition and Functions' for package variant LFBGA-292 ADAS
  - Changes in LFBGA-292 ADAS Package Variant 'Port 00 Functions' table; P00.0, P00.1, P00.2, P00.3, P00.4, P00.5, P00.11, P00.12
  - Changes in LFBGA-292 ADAS Package Variant 'Port 02 Functions' table; P02.0, P02.1, P02.2, P02.3, P02.4, P02.5, P02.8
  - Changes in LFBGA-292 ADAS Package Variant 'Port 10 Functions' table; P10.2, P10.3, P10.5, P10.6, P10.7, P10.8
  - Changes in LFBGA-292 ADAS Package Variant 'Port 11 Functions' table; P11.0, P11.1, P11.4, P11.5, P11.7, P11.8, P11.10, P11.12, P11.13, P11.14
  - Changes in LFBGA-292 ADAS Package Variant 'Port 12 Functions' table; P12.0, P12.1
  - Changes in LFBGA-292 ADAS Package Variant 'Port 14 Functions' table; P14.0, P14.1, P14.6, P14.7, P14.8, P14.9, P14.10
  - Changes in LFBGA-292 ADAS Package Variant 'Port 15 Functions' table; P15.0, P15.1, P15.2, P15.3, P15.4, P15.5
  - Changes in LFBGA-292 ADAS Package Variant 'Port 20 Functions' table; P20.0, P20.3, P20.6, P20.7, P20.8, P20.9, P20.10
  - Changes in LFBGA-292 ADAS Package Variant 'Port 21 Functions' table; P21.0, P21.1, P21.2, P21.3, P21.4, P21.5
  - Changes in LFBGA-292 ADAS Package Variant 'Port 22 Functions' table; P22.2, P22.3, P22.4, P22.5, P22.6, P22.7, P22.8, P22.9, P22.10, P22.11
  - Changes in LFBGA-292 ADAS Package Variant 'Port 23 Functions' table; P23.0, P23.1, P23.2, P23.3, P23.5, P23.6, P23.7
  - Changes in LFBGA-292 ADAS Package Variant 'Port 32 Functions' table; P32.2, P32.3, P32.4, P32.5, P32.6, P32.7
  - Changes in LFBGA-292 ADAS Package Variant 'Port 33 Functions' table; P33.0, P33.1, P33.2, P33.3, P33.4, P33.5, P33.7, P33.8, P33.9, P33.10, P33.12, P33.13
  - Changes in LFBGA-292 ADAS Package Variant 'Port 34 Functions' table; P34.1, P34.2
  - Changes in LFBGA-292 Package Variant 'Analog Inputs' table; Ball W5, U5
- Changes in chapter 'Pin Position Definition'
  - Changes in table “Pad List”, Number 206
- Changed description in chapter 'Legend'
  - Column “Buffer Type”: PU2
  - add link to Spirit file
- Changes in chapter “Electrical Specification”
- Changed wording in sub-chapter “Parameter Interpretation”
- Changes in table 'Absolute Maximum Ratings'
  - Added footnote 2) for V_{DD}
  - Changed order of footnotes
- Changes in table "Overload Parameters"
  - Changed table numbers in description
  - Changed parameter condition of "KOVAN"
  - Changed parameter condition of "KOVAP"
  - Added footnote 2) for “KOVAN” and "KOVAP"

Downloaded by IFXDMZlpar-zengzhe 12/02/2019 11:04:31

- Changes in table "Operating Conditions"
  - Added footnote 1) for "VDD"
  - Changed order of footnotes
- Changes in table 'PORST Pad'
  - Added values and notes for parameter V_{IH}
  - Added values and notes for parameter V_{IL}
  - Added footnote 2) for I_{PDL}
- Changes in table 'Fast 5V GPIO' of Standard Pads
  - Removed values and conditions of parameter I_{OZ}
  - Changed footnote 2) for t_{RF}
  - Added footnote 4) for I_{PUH}
  - Added footnote 5) for I_{PDL}
- Changes in table 'Fast 3.3V GPIO' of Standard Pads
  - Combined equal values of I_{OZ} in single line
  - Changed footnote 2) for t_{RF}
  - Added footnote 4) for I_{PUH}
  - Added footnote 5) for I_{PDL}
- Changes in table 'Slow 5V GPIO' of Standard Pads
  - Removed values and conditions of parameter I_{OZ}
  - Combined equal values of I_{OZ} in single line
  - Changed footnote 2) for t_{RF}
  - Added footnote 4) for I_{PUH}
  - Added footnote 5) for I_{PDL}
- Changes in table 'Slow 3.3V GPIO' of Standard Pads
  - Removed values and conditions of parameter I_{OZ}
  - Combined equal values of I_{OZ} in single line
  - Changed footnote 2) for t_{RF}
  - Added footnote 4) for I_{PUH}
  - Added footnote 5) for I_{PDL}
- Changes in table 'RFast 5V GPIO' of Standard Pads
  - Changed footnote 2) for t_{RF}
  - Added footnote 4) for I_{PUH}
  - Added footnote 5) for I_{PDL}
- Changes in table 'RFast 3.3V pad' of Standard Pads
  - Changed footnote 2) for t_{RF}
  - Added footnote 4) for I_{PUH}
  - Added footnote 5) for I_{PDL}
- Changes in table 'Class S 5V' of Standard Pads
  - Added footnote 2) for I_{PUH}
  - Added footnote 3) for I_{PDL}
- Add table 'Class S 3.3V'
- Changes in table 'ADC Reference Pads' of Standard Pads

Downloaded by IFXDMZ|par-zengzhe 12/02/2019 11:04:31

  - Changed values and notes of parameter I_{OZ2}
  - Added parameter and conditions for I_{OZ2}
- Changes in table 'LVDS - IEEE standard LVDS general purpose link (GPL)' of LVDS Pads
  - Added footnote 1) for t_{RISE20}
  - Added footnote 2) for t_{FALL20}
  - Changed order of footnotes
- Changes in table 'VADC 5V'
  - Added values and conditions of parameter V_{AREF}
  - Changed values and conditions of V_{AREF}
  - Added footnote 1) for V_{AREF}
  - Changed order of footnotes
- Changes in table 'DSADC 5V'
  - Changed value of parameter V_{AREF}
  - Added value and condition of parameter I_{REF}
- Changes in table 'OSC_XTAL'
  - Added parameter for DC_{X1}
  - Added parameter for J_{ABSX1}
  - Added parameter for SR_{XTAL1}
  - Added footnote 3) for DC_{X1}, J_{ABSX1}, SR_{XTAL1}
- Changes in table 'Back-up Clock'
  - Changed value of parameter f_{SB}
  - Changed footnote 1) for f_{BACKT}
- Changes in table 'DTS PMS'
  - Added parameter conditions for T_{NL}
- Changes in table 'DTS Core'
  - Added parameter conditions for T_{NL}
- Changes in description of chapter 'Power Supply Current'
  - Changed information of real power pattern
  - Added peripherals information
  - Added max power pattern
  - Added ADAS power pattern
- Changes in table 'Current Consumption'
  - Added value and conditions for parameter I_{DDRAIL}
  - Added parameter for parameter PD_{SR}
  - Added conditions for parameter PD_{SR}
  - Changed value for parameter I_{SLEEP}
  - Addded parameter for $I_{DDP3RAIL}$
  - Remove footnote 1) for $I_{DDP3RAIL}$
  - Changed footnote 1) for $I_{DDPORST}$, $I_{EXTFLEX}$, I_{EVRSB} , I_{SLEEP}
  - Mapped footnote 2) to all values of $I_{DD3RAIL}$
  - Changed footnote 3) for $I_{EXTFLEX}$
  - Changed order of footnotes

Downloaded by IFXDMZ|par-zengzhe 12/02/2019 11:04:31

  - Added footnote 5) for $I_{EXTFLEX}$
- Changes in table 'Module Current Consumption'
  - Changed value and condition of parameter $I_{EXTLVDS}$
  - Added footnote 3) to $I_{EXTLVDS}$
  - Added footnote 5) to I_{DDM}
  - Changed footnote 8) for $I_{SCRIDLE}$
- Changes in table 'Module Core Current Consumption'
  - Changed footnote 1) for I_{DDHSM}
  - Changed footnote for I_{DDSPU2}
  - Removed parameter I_{DDSPU1}
  - Removed parameter $I_{DDSPULJ1}$
- Changes in chapter “Supply Ramp-up and Ramp-down Behavior”
  - Changed Figure and textual description for “Single supply mode (a)”
  - Changed Figure and textual description for “Single supply mode (e)”
  - Changed Figure and textual description for “Single supply mode (d)”
  - Changed Figure and textual description for “Single supply mode (h)”
- Changes in table 'Reset'
  - Added parameter $t_{WARMRSTSEQ}$
  - Shift typ limit to max limits for mode0 and mode1 and removed typ limits for parameter t_{SCR}
- Changes in table 'EVR33 LDO'
  - Added footnote 7) for dV_{OUT} / dI_{OUT}
- Changes in table 'Supply Monitors'
  - Changed condition of parameter V_{RST33}
  - Changed condition of parameter V_{RSTC}
  - Changed values of parameter V_{EXTMON}
  - Changed footnote 2) for $V_{EXTPRIUV}$, $V_{DDP3PRIUV}$, $V_{DDPRIUV}$,
  - Changed footnote 3) for $V_{DDP3PRIUV}$, $V_{DDPRIUV}$,
  - Added footnote 5) for V_{EXTMON}, $V_{DDP3MON}$, V_{DDMON}
- Changes in table 'EVRC SMPS External Components'
  - Add values of parameter 'L_{DC}' for condition 0.8MHz
- Changed chapter naming from 'Phase Locked Loop (PLL)' to 'System Phase Locked Loop (SYS_PLL)'
- Changes in table 'PLL System'
  - Removed parameter values of 'f_{MV}'
- Changes in table 'QSPI Master Mode Timing'
  - Added footnote 1) for all parameters
- Changes in table 'MSC LVDS clock/data'
  - Added footnote 3) for all parameters
- Changes in chapter 'HSCT Parameters'
  - Added table for “HSCT”
- Add chapter FSP Parameter
- Changes in table 'Flash'
  - Changed description of parameter of N_{DFD}

Downloaded by IFXDMZ|par-zengzhe 12/02/2019 11:04:31

  - Added parameter N_{DFDC}
  - Added parameter N_{UCBD}
  - Added parameter $t_{VER_PAGE_DC}$
  - Added parameter $t_{VER_PAGE_DS}$
  - Removed parameter $t_{VER_PAGE_D}$
  - Changed parameter note t_{RTU}
- Removed chapter 'Parameters Specific to the Emulation Part Only'
- Changes in table 'Package Parameters'
  - Changed parameter value of RTH_JCB
  - Changed parameter values of RTH_JCT

Downloaded by IFXDMZ\par-zengzhe 12/02/2019 11:04:31

Downloaded by IFXDMZ\par-zengzhe 12/02/2019 11:04:31

www.infineon.com

Published by Infineon Technologies AG