PIN DIAGRAMS

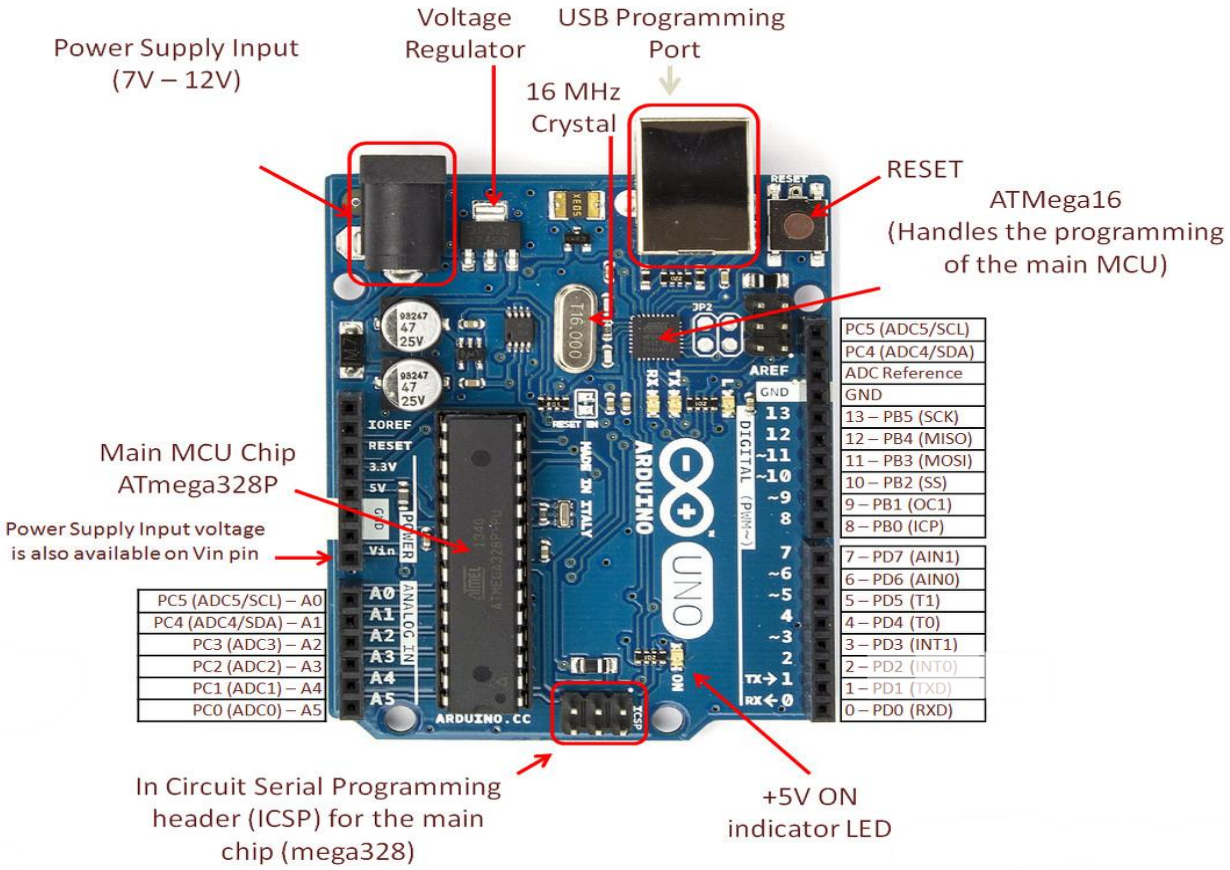

ARDUINO UNO – ATmega328P

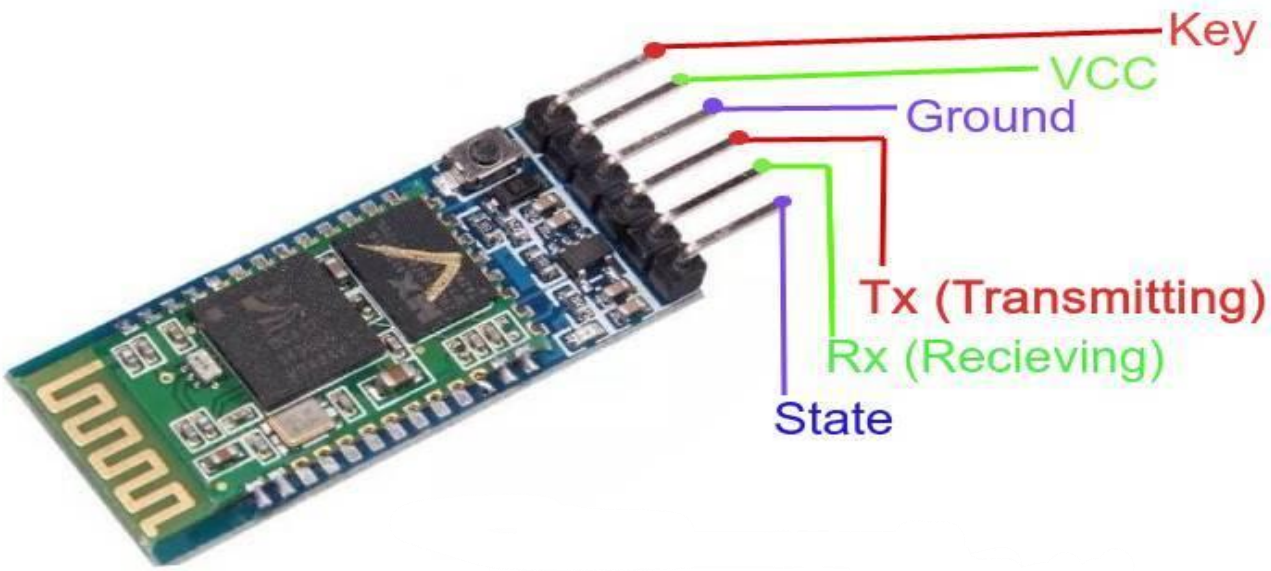

HC-05 (BLUETOOTH MODULE)

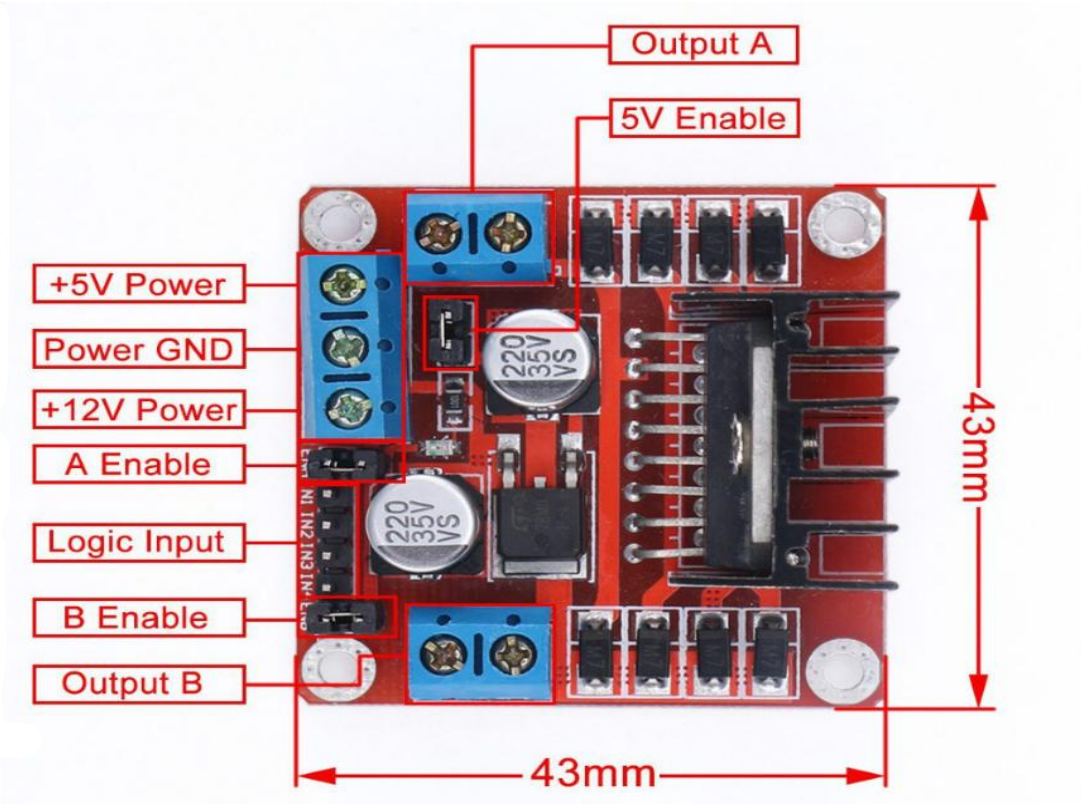

L293D H-BRIDGE MOTOR DRIVER