RAJALAKSHMI ENGINEERING COLLEGE

ELECTRICAL AND ELECTRONICS ENGINEERING

ENGINEERING PRACTICES LABORATORY MANUAL

SUBJECT CODE: GE23122

NAME :

ROLL. NO. :

DEPARTMENT :

YEAR & SECTION :

Scanned with OKEN Scanner
Scanned with OKEN Scanner

INDEX

S.NO.	NAME OF EXPERIMENT
SAFETY PRECAUTIONS FOR ELECTRICAL ENGINEERING PRACTICE	
PREPARATION OF WIRING DIAGARAM	
ACCESSORIES USED FOR ELECTRICAL WIRING	
1	RESIDENTIAL HOUSE WIRING USING SWITCHES, FUSE, INDICATOR, LAMP AND ENERGY METER
2	FLUORESCENT LAMP WIRING
3	STAIRCASE WIRING
4	MEASUREMENT OF ELECTRICAL QUANTITIES - CURRENT, VOLTAGE, POWER AND POWER FACTOR IN RL CIRCUIT
5	MEASUREMENT OF EARTH RESISTANCE USING MEGGER
6	STUDY OF CEILING FAN AND IRON BOX

Scanned with OKEN Scanner
Scanned with OKEN Scanner

LIST OF ELECTRICAL SYMBOLS

BATTERY	+ −	FUSE		MOTOR 1-PHASE 1-PHASE INDUCTION	MTR
CABLE, SHIELDED (GROUNDED)		FUSE LINK		RESISTOR FIXED	
CAPACITOR FIXED		GLOW COIL		TAPPED	
POLARIZED	+	GROUND CONNECTION		VARIABLE	
VARIABLE		HEATER CRANKCASE HEATER STRIP HEATER		SOLENOID	
CIRCUIT BREAKER THERMAL TRIP		INDUCTOR FIXED		SWITCH, GENERAL SINGLE-POLE SINGLE-THROW	
MAGNETIC TRIP		VARIABLE		SINGLE-POLE DOUBLE-THROW	
CROSSOVER		LIGHT *INDICATES COLOR		MULTI-POLE, SINGLE-THROW	
ELECTRODE, IGNITER		METER *INDICATES TYPE		MULTI-POLE DOUBLE-THROW	

Scanned with OKEN Scanner
Scanned with OKEN Scanner

Exp. No	Date of EXP.	Experiment Name	Marks obtained	Signature of staff in charge
1.		RESIDENTIAL HOUSE WIRING USING SWITCHES, FUSE, INDICATOR, LAMP AND ENERGY METER		
2.		FLUORESCENT LAMP WIRING		
3.		STAIRCASE WIRING		
4.		MEASUREMENT OF ELECTRICAL QUANTITIES - CURRENT, VOLTAGE, POWER AND POWER FACTOR IN RL CIRCUIT		
5.		MEASUREMENT OF EARTH RESISTANCE USING MEGGER		
6.		STUDY OF CEILING FAN AND IRON BOX		

Scanned with OKEN Scanner
Scanned with OKEN Scanner

SAFETY PRECAUTIONS FOR ELECTRICAL ENGINEERING PRACTICE

While working with electricity, it is necessary that we take all basic safety precautions. A little loss of concentration or a little carelessness can lead to serve shocks and fatal accidents. Some of the precautions are given below:

1. In case a person gets into contact with a live conductor, the mains is to be put off immediately
2. Before attempting to disengage a person in contact with a live wire, one must insulate oneself by standing on a dry rubber mat or wooden boards.
3. While working on a circuit, the corresponding fuse carrier should be taken away.
4. In the case of a fire, water should not be thrown on the live conductor.
5. The Earthing has to be maintained well
6. The switch is always to be connected on the live conductor.
7. In the case of an electric shock, after giving first aid, call a doctor. Continue first aid till the doctor takes over.
8. Use wooden or PVC insulated handle screws drivers when working on electrical circuits.

Scanned with OKEN Scanner
Scanned with OKEN Scanner

PREPARATION OF WIRING DIAGRAM

Wiring is the method of drawing or laying wires or cables and connecting accessories and fittings for the purpose of distributing electrical power to the various points or equipment from the mains.

- **Durability** – Any wiring system must be able to withstand wear and tear due to weather. The atmospheric action should not affect the wiring system.
- **Safety** – Safety is the most important point to be considered in the selection of any wiring system. The wiring should be perfectly leak proof. Selection of the wire should be according to the ISI standard and the wire sheet be of such a capacity that it can withstand the total load of the whole installation.
- **Mechanical Protection** – The wiring should be mechanically sound. It should be properly protected from damages of physical nature
- **Appearance** – The appearance of the wiring has an important bearing on the architectural beauty of an edifice from the aesthetic point of view. Normally conduct wiring embedded under plaster is the proper choice for improving the appearance of a wiring system.
- **Environmental Conditions** – In places where corrosive acids and alkalis are to come in contact with wiring systems have to be protected against fumes and dampness.
- **Accessibility** – Facility for extension and renewal should be provided. The wiring system adopted should be economical and should suit the individual. Consumer initial cost be minimized

Scanned with OKEN Scanner
Scanned with OKEN Scanner

ACCESSORIES USED FOR ELECTRICAL WIRING

Fuses

Fuses protect electrical devices and components from over currents and short circuits that occur in improperly operating circuits.

Fuse holders

Fuse holders are devices for containing, protecting and mounting fuses. Blown fuses can be changed quickly and easily when used in conjunction with a fuse holder.

Electrical Conduit and Fittings

Electrical conduits and fittings are lengths of solid tubing used to house, protect, and cover electrical wiring and cables in power distribution systems.

Cable Carriers

Cable carriers are constructed of flexible links and are used to organize and manage cables and hoses for moving applications.

Switches

Switches are devices that allow electric current to flow when closed and prevent current flow when opened.

Disconnect switches

Disconnect switches rapidly disconnect from power supplies in the event of an emergency

Emergency stop switches

Emergency stop switches are devices that users manipulate to initiate the complete shutdown of a machine, system, or process.

Power switches

Power switches are used to apply power to or remove power from instruments such as large-scale factory equipment

Scanned with OKEN Scanner
Scanned with OKEN Scanner

Pushbutton switches

Pushbutton switches are mechanical switches defined by the method used to activate the switch. The activation method is typically in the form of a plunger that is pushed down to open or close the switch

Wires, Cables, and Accessories

Wires, cables, and accessories used to transmit electrical power or signals.

Meters, Readouts and Indicators

Any type of equipment used to display information in various formats including, digital readouts, indicator lights or panel meters

Connectors

Components used to conduct and transfer signals (electrical, optical, rf, etc.) or power from one cable to another.

Electrical Connectors

Electrical connectors are devices that join electrical circuits together. Male connectors plug into receptacles, jacks, and outlets. Female connectors contain sockets to receive other devices.

AC Power Connectors

AC power connectors transfer alternating current through a variety of electronic devices. AC power connectors include simple AC inlets, outlets, and power entry modules.

Data Input Devices

Devices such as a keyboard or mouse, used to interact with other devices or computers for the purpose of inputting data.

Batteries and Accessories

Devices that convert stored energy into electrical current; the two main types are chemical batteries and physical batteries such as solar cells, nuclear energy and thermal batteries.

Scanned with OKEN Scanner
Scanned with OKEN Scanner

Lighting Fixtures and Lamps

Lighting fixtures and lamps are used for illumination purposes or to provide a source of light fora specific application. This category includes Halogen, Incandescent, Fluorescent, and Lighting Fixtures.

Fluorescent Lamps

Fluorescent lamps are high-efficiency lamps that use electrical discharge through low-pressure mercury vapor to produce ultraviolet (UV) energy, which is then transformed into visible light.

Incandescent Lamps

Incandescent lamps generate light by passing an electric current through a thin filament wire (usually of tungsten) until the wire is extremely hot.

Carrying Cases and Equipment Cases

Carrying cases and equipment cases protect contents from impact, shock, vibration, rain, and dust.

Terminal and Junction Boxes

Terminal and junction boxes are used to house electrical components and facilitate wiring. Theyare T-shaped or rectangular, made from a variety of materials, and available in many different sizes, sealing configurations and mounting styles.

Scanned with OKEN Scanner
Scanned with OKEN Scanner

EXP. 1 RESIDENTIAL HOUSE WIRING USING SWITCHES, FUSE, INDICATOR, LAMP AND ENERGY METER

Aim:

To implement residential house wiring using switches, fuse, indicator, lamp and energy meter.

Apparatus Required:

S.No.	Components Required	Range	Quantity
1.	Switch	SPST, 5A	3 No.s
2.	Incandescent lamp	40W	2 No.s
3.	Lamp Holder	-	2 No.s
4.	Indicator	-	1 No
5.	Scoket	10A	1 No.
6.	Wires	-	As per required
7.	Energy meter	300V , 16A 750 rev 50Hz	1 No.s

Tools Required: Wire mans tool kit - 1 No.

Theory:

Conductors, switches and other accessories should be of proper capable of carrying the maximum current which will flow through them. Conductors should be of copper or aluminum. In power circuit, wiring should be designed for the load which it is supposed to carry current. Power sub circuits should be kept separate from lighting and fan sub – circuits. Wiring should be done on the distribution system with main and branch distribution boards at convenient centers. Wiring should be neat, with good appearance. Wires should pass through a pipe or box, and should not twist or cross. The conductor is carried in a rigid steel conduit conforming to standards or in a porcelain tube.

A switch is used to make or break the electric circuit. It must make the contact finely. Under some abnormal conditions it must retain its rigidity and keep its alignment between switch contacts. The fuse arrangement is made to break the circuit in the fault or overloaded conditions. The energy meter is used to measure the units (KWh) consumed by the load.

Procedure:

1. Study the given wiring diagram
2. Make the location points for energy meter, main witch box, switchboard, and lamp.
3. Draw the lines for wiring on the wooden board.
4. Place the wires along with the line and fix.
5. Fix the bulb holder, Switches, Socket in marked positions on the wooden board.
6. Connect the energy meter and main switch box in marked positions on the wooden board.
7. Give a supply to the wires circuit.
8. Test the working of light and socket.

Scanned with OKEN Scanner
Scanned with OKEN Scanner

Circuit Diagram:

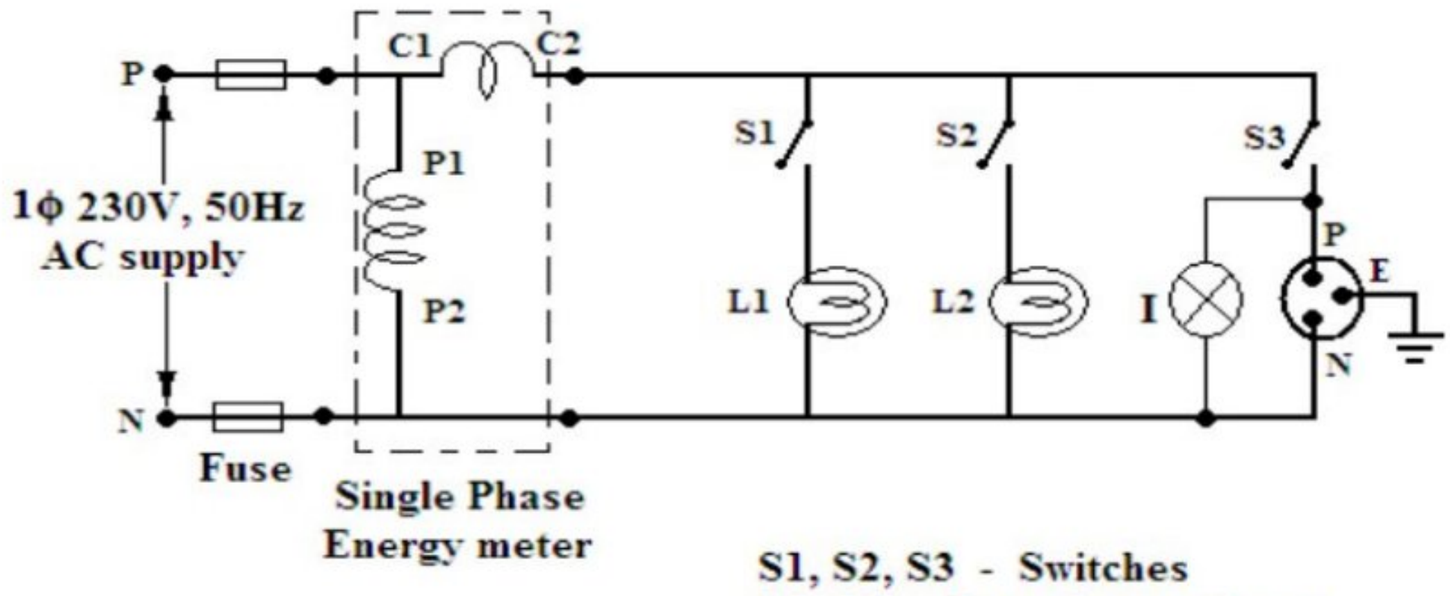

S1, S2, S3 - Switches
L1, L2 - Incandescent lamps
I - Indicator

Residential wiring diagram:

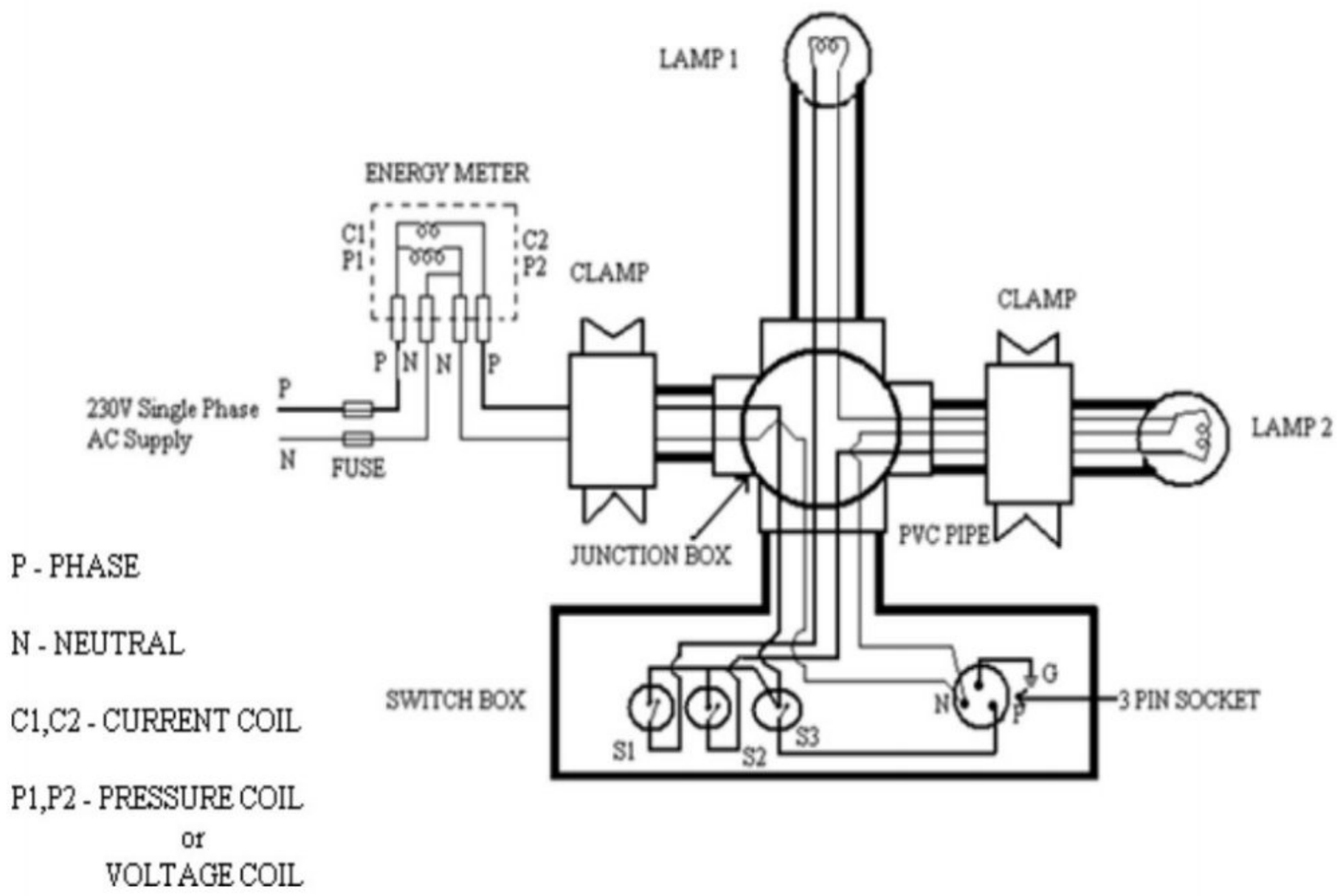

Scanned with OKEN Scanner
Scanned with OKEN Scanner

VIVA QUESTIONS:

1. What is the purpose of neutral in the circuit?
2. What kind of supply is given to the circuit?
3. What is the supply for single phase?
4. What is the purpose of fuse in a circuit?
5. What is series and parallel connection of components?

REC		
DEPT. OF EEE		
	MAX MARKS	OBT MARKS
ATTENDANCE	5	
OBSERVATION	5	
RECORD	5	
VIVA	5	
TOTAL	20	

Result:

Thus the simple house wiring by using switches, fuse, indicator, filament lamps and energy meter was studied.

Scanned with OKEN Scanner
Scanned with OKEN Scanner

EXP. 2 FLUORESCENT LAMP WIRING

Aim:

To make connections of a fluorescent lamp wiring and to study the accessories of the same.

Apparatus Required:

S.No	Components	Range/Type	Quality
1.	Fluorescent Lamp fixture	4 ft	1
2.	Fluorescent lamp	40W	1
3.	Choke	40W, 230V	1
4.	Starter	-	1
5.	Connecting wires	-	As required

Tools Required:

Wire man's tool Kit - 1 No

Theory:

1. The electrode of the starter which is enclosed in a gas bulb filled with argon gas, cause discharge in the argon gas with consequent heating.
2. Due to heating, the bimetallic strip bends and causes in the starter to close. After this, the choke, the filaments (tube ends) to tube and starter becomes connected in series.
3. When the current flows through the tube end filaments the heat is produced. During the process the discharge in the starter tube disappears and the contacts in the starter move apart.
4. When sudden break in the circuit occur due to moving apart of starter terminals, this causes a high value of EMF to be induced in the choke.
5. According to Lenz's law, the direction of induced EMF in the choke will try to oppose the fall of current in the circuit.
6. The voltage thus acting across the tube ends will be high enough to cause a discharge to occur in the gas inside the tube. Thus the tube starts giving light.
7. The fluorescent lamp is a low pressure mercury lamp and is a long evacuated tube. It contains a small amount of mercury and argon gas at 2.5 mm pressure. At the time of switching in the tube, mercury is in the form of small drops. Therefore, to start the tube, filling up of argon gas is necessary. So, in the beginning, argon gas starts burning at the ends of the tube; the mercury is heated and controls the current and the tube starts giving light. At each end of the tube, there is a tungsten electrode which is coated with fast electron emitting material. Inside of the tube is coated with phosphor according to the type of light.
8. A starter helps to start the start the tube and break the circuit.
9. The choke coil is also called blast. It has a laminated core over which enameled wire is wound. The function of the choke is to increase the voltage to almost 1000V at the time of switching on the tube and when the tube starts working, it reduces the voltage across the tube and keeps the current constant.

Scanned with OKEN Scanner
Scanned with OKEN Scanner

Circuit diagram:

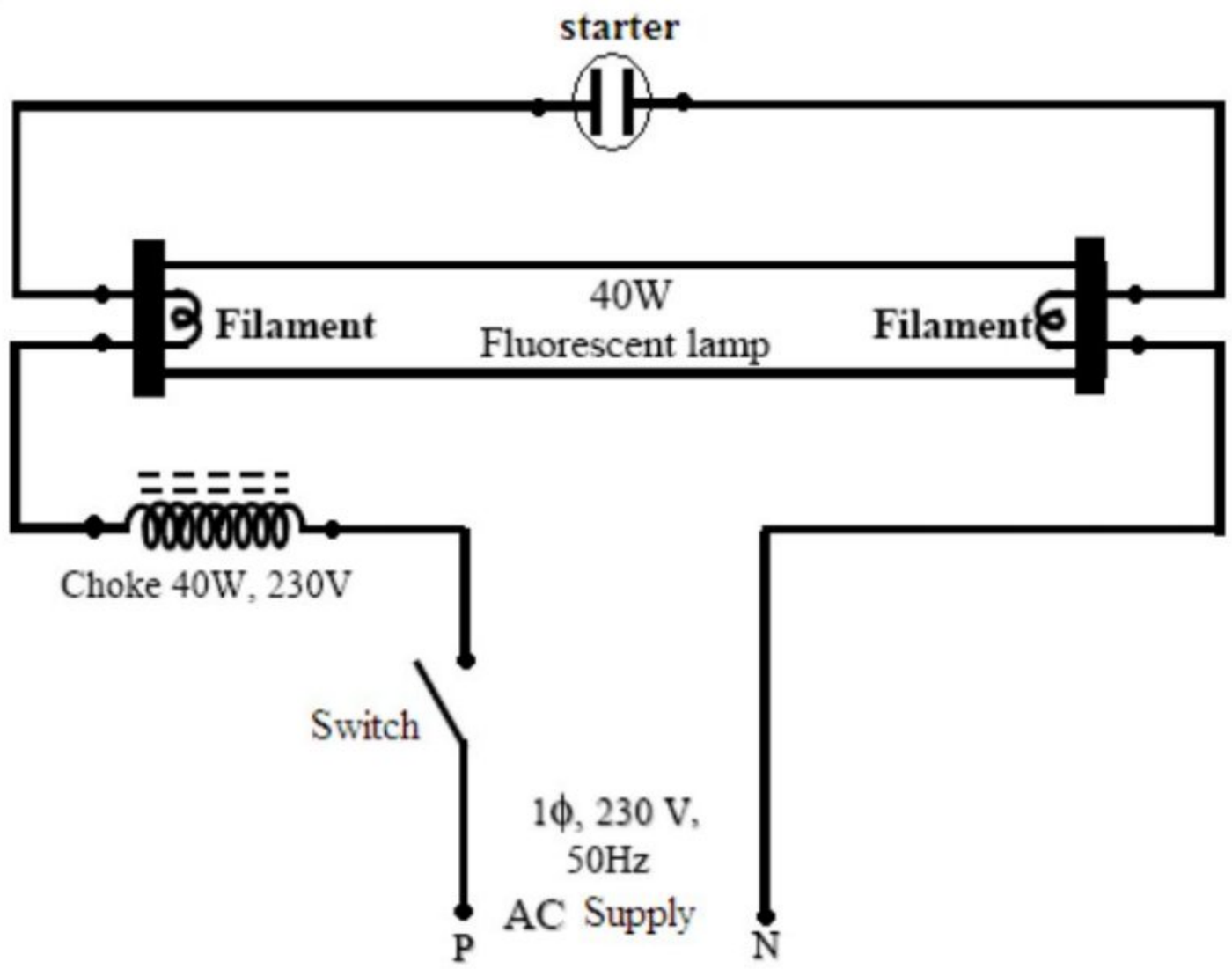

Tabulation:

S.no.	Switch Position	Lamp condition
1	S = 0	
2	S = 1	

Scanned with OKEN Scanner
Scanned with OKEN Scanner

Procedure

1. Give the connections as per the circuit diagram.
2. Fix the tube holder and the choke in the tube.
3. The phase wire is connected to the choke and neutral directly to the tube
4. Connect the starter in series with the tube.
5. Switch on the supply and check the fluorescent lamp lighting.

VIVA QUESTIONS:

1. What are the gases filled in the fluorescent tube.

2. What is the use of choke?

3. Why is starter used in fluorescent tube?

4. Will the tube light glow if the starter is removed after the tube light is on?

5. What is the material used for coating the tube light?

REC		
DEPT. OF EEE		
	MAX MARKS	OBT MARKS
ATTENDANCE	5	
OBSERVATION	5	
RECORD	5	
VIVA	5	
TOTAL	20	

Result:

Thus the fluorescent lamp circuit is studied and assembled.

Scanned with OKEN Scanner
Scanned with OKEN Scanner

EXP. 3 **STAIRCASE WIRING**

Aim:

To control a single lamp from two different places.

Apparatus Required:

S.No	Components	Quality/ Range
1	Incandescent Lamp	1(230 V,40W)
2	Lamp holder	1
3	Two way switches	2 (230V, 5A)
4	Connecting Wires	As required

Tools Required:

Wire mans tool Kit - 1No.

Theory:

1. A two way switch is installed near the first step of the stairs. The other two way switch is installed at the upper part where the stair ends.
2. The light point is provided between first and last stair at an adequate location and height if the light is switched on by the lower switch. It can be switched off by the switch at the top or vice versa.
3. The circuit can be used at the places like bed room where the person may not have to travel for switching off the light to the place from where the light is switched on.
4. Two numbers of Two-way switches are used for the purpose. The supply is given to the switch at the short circuited terminals.
5. The connection to the light point is taken from the similar short circuited terminal of the second switch. Other two independent terminals of each circuit are connected through cables.

Procedure:

1. Give the connections as per the circuit diagram.
2. Verify the connections.
3. Switch on the supply.
4. Verify the conditions.

Scanned with OKEN Scanner
Scanned with OKEN Scanner

Circuit Diagram:

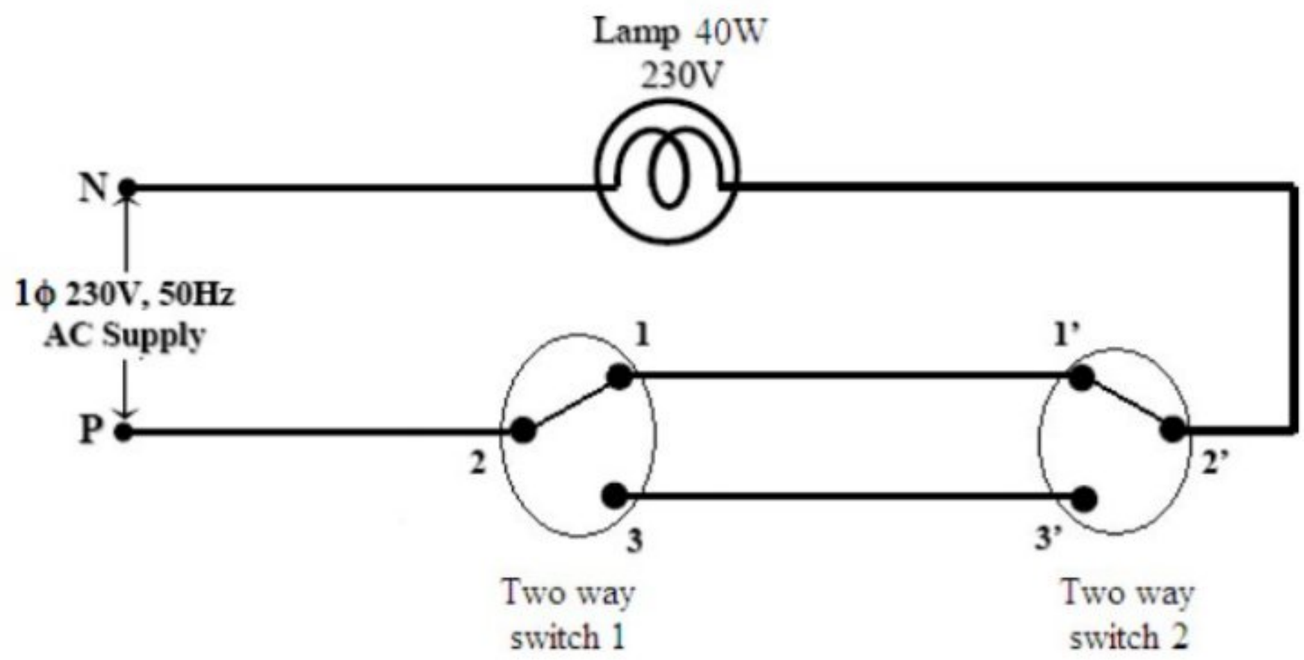

Tabulation:

Position of switches		Condition of lamp
S1	S2	

Scanned with OKEN Scanner
Scanned with OKEN Scanner

VIVA QUESTIONS:

1. What is the type of switch using in this experiment?

2. What are the applications?

3. What is the difference between 1-way and 2-way switch?

4. What is staircase wiring?

5. What is meant by incandescent lamp?

REC		
DEPT. OF EEE		
	MAX MARKS	OBT MARKS
ATTENDANCE	5	
OBSERVATION	5	
RECORD	5	
VIVA	5	
TOTAL	20	

Result:

Thus the circuit to control the single lamp from two different places is studied and verified.

Scanned with OKEN Scanner
Scanned with OKEN Scanner

EXP. 4 MEASURMENT OF ELECTRICAL QUANTITES – VOLTAGE, CURRENT, POWER AND POWER FACTOR IN RL CIRCUIT

Aim:

To measure electrical quantities - voltage, current, power and to calculate power factor for RL load

Apparatus Required:

S.No.	Components	Range	Quantity
1.	Voltmeter	(0-300)V, MI type	1
2.	Ammeter	(0-10)A, MI type	1
3.	Wattmeter	300V, 10A, UPF	1
4.	Autotransformer	1KVA, 230/(0-270)V	1
5.	Resistive, inductive & capacitive load	-	1
6.	Connecting wires	-	-

Theory:

Power in an electric circuit can be measured using a wattmeter. A wattmeter consists of two coils, namely current coil and pressure coil or potential coil. The current coil is marked as ML and pressure coil is marked as CV. The current coil measures the quantity that is proportional to current in the circuit and the pressure coil measures quantity that is proportional to voltage in the circuit. An ammeter is connected in series to the wattmeter to measure current. A voltmeter is connected in parallel to wattmeter to measure voltage. The power consumed by the load is measured using the wattmeter. The power factor of the circuit is calculated using the relation given below:

Formulae:

Actual power = OR x Multiplication factor; Where OR – Observed wattmeter reading
Apparent power = VI watts; Where V – Voltmeter reading, I – Ammeter reading
Power Factor, $\cos\varphi$ = Actual Power / Apparent Power

Procedure:

1. Connect the circuit as shown in the circuit diagram.
2. Switch on the supply and vary the auto transformer to build the rated voltage.
3. Observe the readings of ammeter, voltmeter & power for various load values.
4. After taking all the readings, bring the voltage to minimum in the autotransformer. Switch off the power supply.
5. Calculate the power factor by the given formula.

Scanned with OKEN Scanner
Scanned with OKEN Scanner

Circuit Diagram:

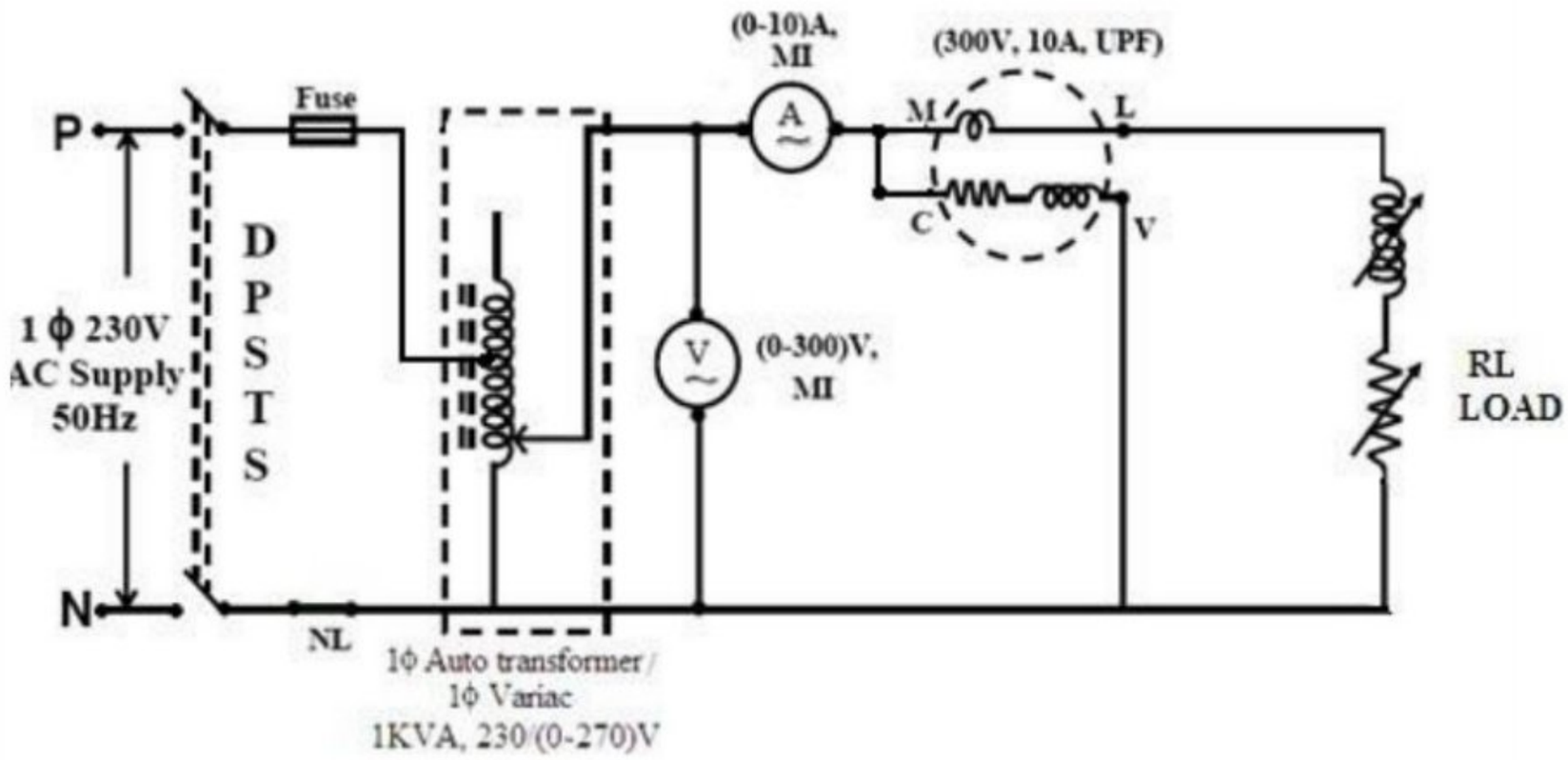

Tabulation:

MF = Multiplication factor

S.No	Voltage (V)	Current (A)	Wattmeter Reading (Watts)		Power factor Cosφ
			Obs.Reading =(OR) Watts	Act. Reading =(ORxMF) Watts	

Scanned with OKEN Scanner
Scanned with OKEN Scanner

Model Calculation:

VIVAQUESTIONS:

1. Define Voltage and Current?
2. Define power and power factor?
3. What is an auto-transformer?
4. what is the function of auto transformer?
5. What is the use of wattmeter?

REC		
DEPT. OF EEE		
	MAX MARKS	OBT MARKS
ATTENDANCE	5	
OBSERVATION	5	
RECORD	5	
VIVA	5	
TOTAL	20	

Result:

Thus the electrical quantities – voltage, current and power are measured for RLC load and corresponding power factor is calculated.

Scanned with OKEN Scanner
Scanned with OKEN Scanner

EXP. 5 MEASUREMENT OF EARTH RESISTANCE USING MEGGER

Aim:

To measure the resistance to earth / insulation resistance of the order of mega ohms.

Apparatus Required:

S.No.	Components	Range	Quantity
1.	Insulation Tester (Megger)	500V, 0-200MΩ	1
2.	Voltmeter	(0 – 600)V, MC type	1
3.	Any electrical equipment (Transformer, cable)	-	1

Theory:

For this experiment we have to use the Megger. It is an instrument for testing the insulation resistance of the order of mega ohms. It consists of a hand-driven DC generator and a direct reading ohm meter. A simplified circuit diagram of the instrument is shown in Figure.1

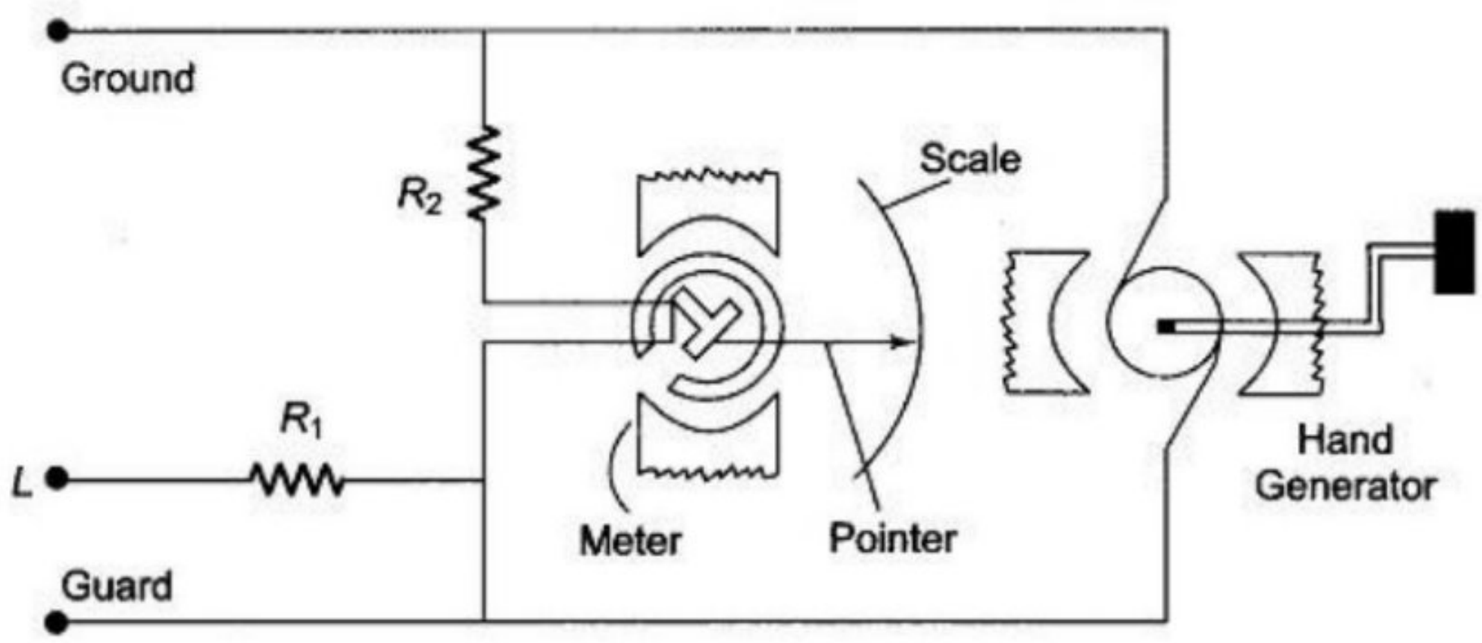

Figure 1: Simple Megger Circuit Diagram

The moving element of the ohm meter consists of two coils, A and B, which are rigidly mounted to a pivoted central shaft and are free to rotate over a C-shaped core(C on Figure 1). These coils are connected by means of flexible leads. The moving element may point in any meter position when the generator is not in operation.

As current provided by the hand-driven generator flows through Coil B, the coil will tend to set itself at right angles to the field of the permanent magnet. With the test terminals open, giving an infinite resistance, no current flows in Coil A. Thereby, Coil B will govern

Scanned with OKEN Scanner
Scanned with OKEN Scanner

Circuit Diagram:

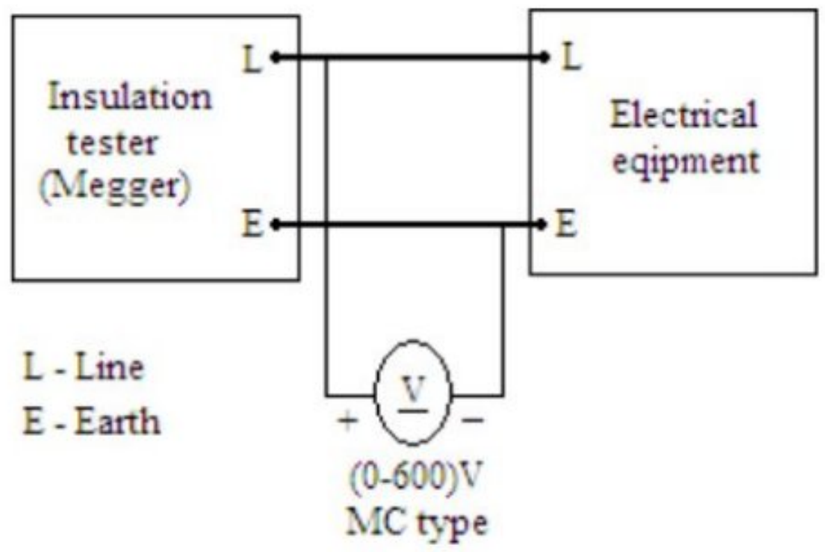

Tabulation:

S.No.	Voltage Reading (V)	Resistance Reading (Ω)
1.		
2.		
3.		
4.		
5.		
	Avg. Resistance=	

Scanned with OKEN Scanner
Scanned with OKEN Scanner

the motion of the rotating element, causing it to move to the extreme counter-clockwise position, which is marked as infinite resistance.

Coil A is wound in a manner to produce a clockwise torque on the moving element. With the terminals marked "line" and "earth" shorted, giving a zero resistance, the current flow through the Coil A is sufficient to produce enough torque to overcome the torque of Coil B. The pointer then moves to the extreme clockwise position, which is marked as zero resistance. Resistance (R^1) will protect Coil A from excessive current flow in this condition.

When an unknown resistance is connected across the test terminals, line and earth, the opposing torques of Coils A and B balance each other so that the instrument pointer comes to rest at some point on the scale. The scale is calibrated such that the pointer directly indicates the value of resistance being measured.

Procedure:

1. Connections are given as per the circuit diagram.
2. The required voltage is generated with the help of hand driven generator.
3. The value of resistance of an electrical equipment is directly read from the display of the insulation tester.
4. Take the value of resistance at different voltages and find the average value of resistance.

VIVA QUESTIONS:

1. What is the instrument used for finding earth resistance?

2. What is purpose of Megger? Mention other name of Megger.

3. From where power is generated for megger?

4. What is earth of electrical equipment?

5. Where the earth terminal of electrical equipment is taken?

Scanned with OKEN Scanner
Scanned with OKEN Scanner

REC		
DEPT. OF EEE		
	MAX MARKS	OBT MARKS
ATTENDANCE	5	
OBSERVATION	5	
RECORD	5	
VIVA	5	
TOTAL	20	

Result:

Thus the measured value of the resistance to earth / insulation resistance of differentelectrical equipment were noted and verified successfully.

Scanned with OKEN Scanner
Scanned with OKEN Scanner

EXP. 6 STUDY OF CEILING FAN

Aim:
To study the ceiling fan.

Introduction:

✓ Ceiling fan is nothing but a single phase induction motor.

✓ Single phase motors are the most familiar of all electric motors because they are extensively used inhome appliances, shops, office etc.

✓ It is true that single phase motors are less efficient substitute for three phase motors but three phasepower is normally not available except in large commercial and industrial establishments.

✓ Since electric power was originally generated and distributed for lighting only, millions of homes were given single phase supply.

✓ This lead to the development of single phase motors. Even where 3 phase mains are present, thesingle phase supply may be obtained by using one of the three lines and the neutral.

Mechanism:

✓ Normally ceiling fans contain three blades in equidistance from each other.

✓ The blades of the fan should be kept away from the ceiling.

✓ If not, it is not possible to drive air from behind. Ceiling fan should be fitted by passing a strong boltthrough a rubber bobbin placed inside a „U" shaped clamp on the ceiling.

✓ Care should be taken for avoiding bending of blades from its original shape.

✓ The resistance type regulator, ON/OFF switch on the wall is connected in series with the phase lineof the motor to control speed and ON/OFF control respectively.

✓ Neutral line is directly connected to the fan motor.

✓ Fan is factory wired for the correct rotation and the wire ends are connected to a phase and neutral lines in the Connector point.

✓ The parts of ceiling fan are stator, rotor and ball bearings. Stator is rotating and the rotor being stationary.

✓ Capacitor (2 or 2.5μF) and Connector is fitted inside the canopy at the top of the fan motor. Line (L) is connected to the common point of a main and the auxiliary winding (auxiliary winding is also called starting winding).

✓ These two windings are connected in parallel through a capacitor at auxiliary winding

✓ The fan ON/OFF control is done by the switch and speed of the fan is controlled by varying the regulator knob position.

✓ Regulator is nothing but a length of resistance with some fixed output terminals.

✓ So the full speed is attained by disconnecting resistance from the circuit and the fan is directlyconnected to the supply.

✓ So in ceiling fan, the electrical energy is converted into mechanical energy and that mechanical motionof the blade makes air to flow away from the fan.

Scanned with OKEN Scanner
Scanned with OKEN Scanner

CONSTRUCTION DIAGRAM

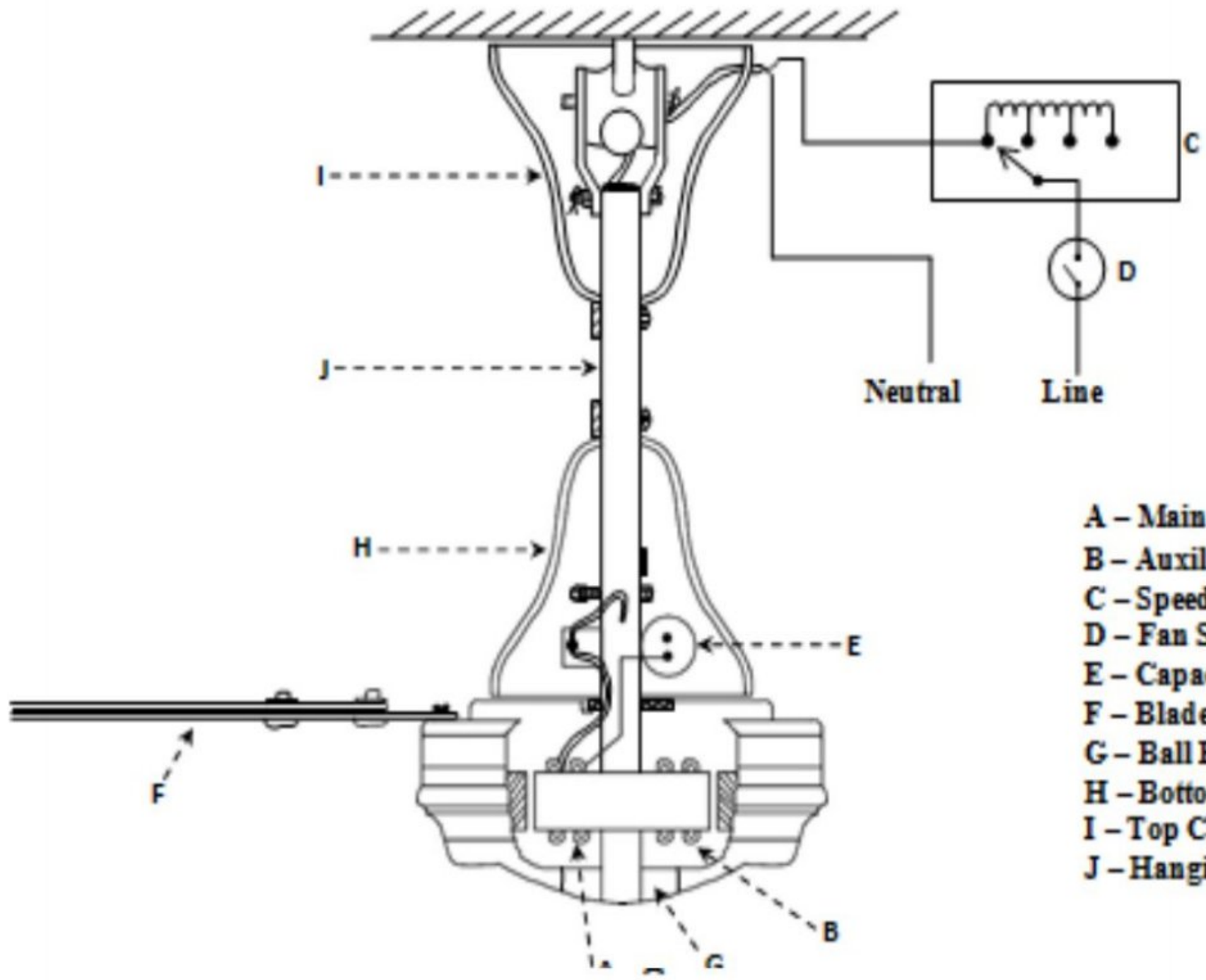

A – Main Winding
B – Auxiliary Winding
C – Speed Regulator
D – Fan Switch
E – Capacitor
F – Blade
G – Ball Bearing
H – Bottom Canopy
I – Top Canopy
J – Hanging Rod

CIRCUIT DIAGRAM

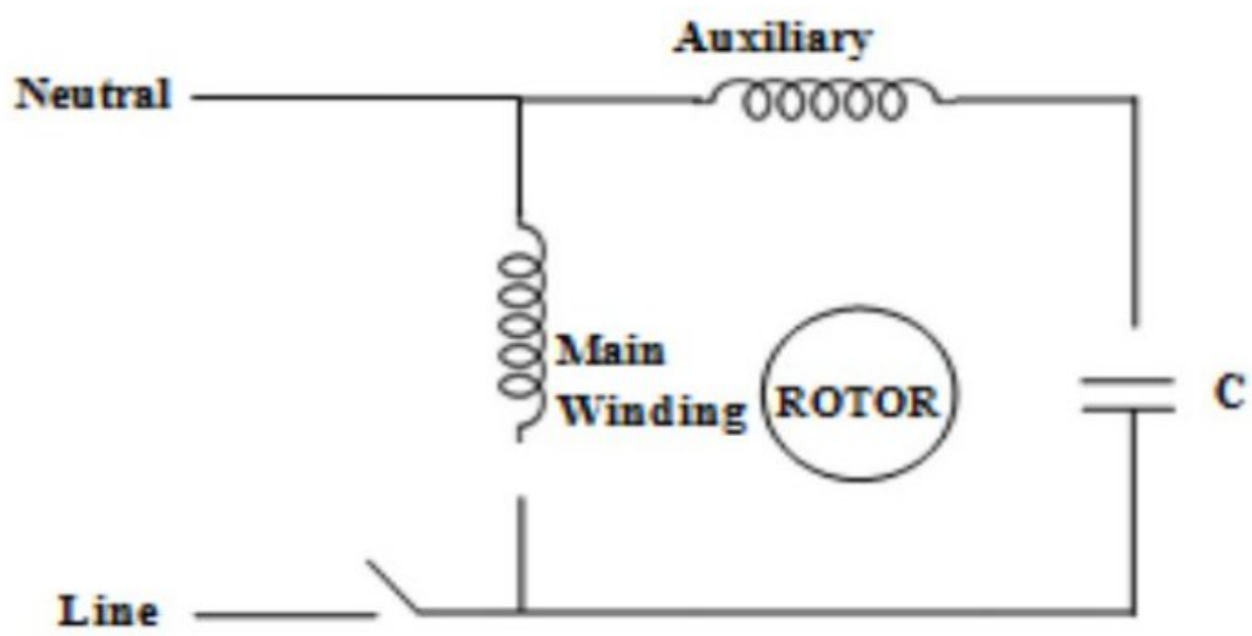

Scanned with OKEN Scanner
Scanned with OKEN Scanner

REC		
DEPT. OF EEE		
	MAX MARKS	OBT MARKS
ATTENDANCE	5	
OBSERVATION	5	
RECORD	5	
VIVA	5	
TOTAL	20	

Result:

Thus the study of ceiling fan was completed.

Scanned with OKEN Scanner
Scanned with OKEN Scanner

EXP 6 **STUDY OF ELECTRIC IRON-BOX**

Aim:

To study of Electric Iron Box.

The electric iron is used to iron the clothes. It is of two types (a) ordinary electric iron (b) automatic type.

Ordinary Iron:

It has following main parts:
Sole plate, heating element, pressure plate, hood assembly.

Sole Plate:

It is made of cast iron and its bottom is nickel plate which is very shining like glass. The top of the plate has a smooth surface and two has threaded holes.

Heating Element:

The heating element is made from flat nichrome wire wound on a mica sheet. The bottom and the top of the element is covered with thick mica sheets and are riveted with the element. The elements are available to different wattages like 450, 750 and 1000 Watt. The element of ordinary iron differ from the element used in automatic iron in construction and wattage. In ordinary iron 450W or 750W element is used. Whereas in automatic iron 750W or 1000W element is used.

Pressure Plate:

The pressure plate is made of cast iron. Its shape resembles with the
heating element. Pressure plate sets and presses the element on sole plate with the help of two machine screws and nuts. It must be tightly fitted. If this plate is kept loose, the element will fuse quickly. The surface bottom side of the pressure plate must be smooth like sole plate. Any projected portion in any of the two plates pressure plate and sole plate, will fuse the element quickly.

Hood Assembly:

It is used to cover all the above stated parts. It is made of iron sheet with nickel plating. Terminal box to give connection to the element is also housed in the handle in many irons and in iron sheet in many other types. For readymade handles are available in the markets.

Automatic Iron:

In such iron box the extra part than the ordinary iron is the thermostat assembly
which disconnects the supply from the element automatically when the press reaches its preset heat range. This iron is costlier than the ordinary iron. A dial knob is fitted outside and on the cover and under the handle. On this dial cotton, rayon, woolen words are written. By giving rotation the knob is set accordingly. When the iron temperature increases beyond the preset limit, the thermostat opens a pair of contact point to interrupt the current flow. Then when the temperature drops below the preset limit, the thermostat recluses the contact points. Turning of heat control knob place more or less pressure on a spring. This then determines how far the thermostat must warm before the contacts open and thus what temperature is required for this action. The figure shows the wires, iron connector, plug and an ordinary iron.

Scanned with OKEN Scanner
Scanned with OKEN Scanner

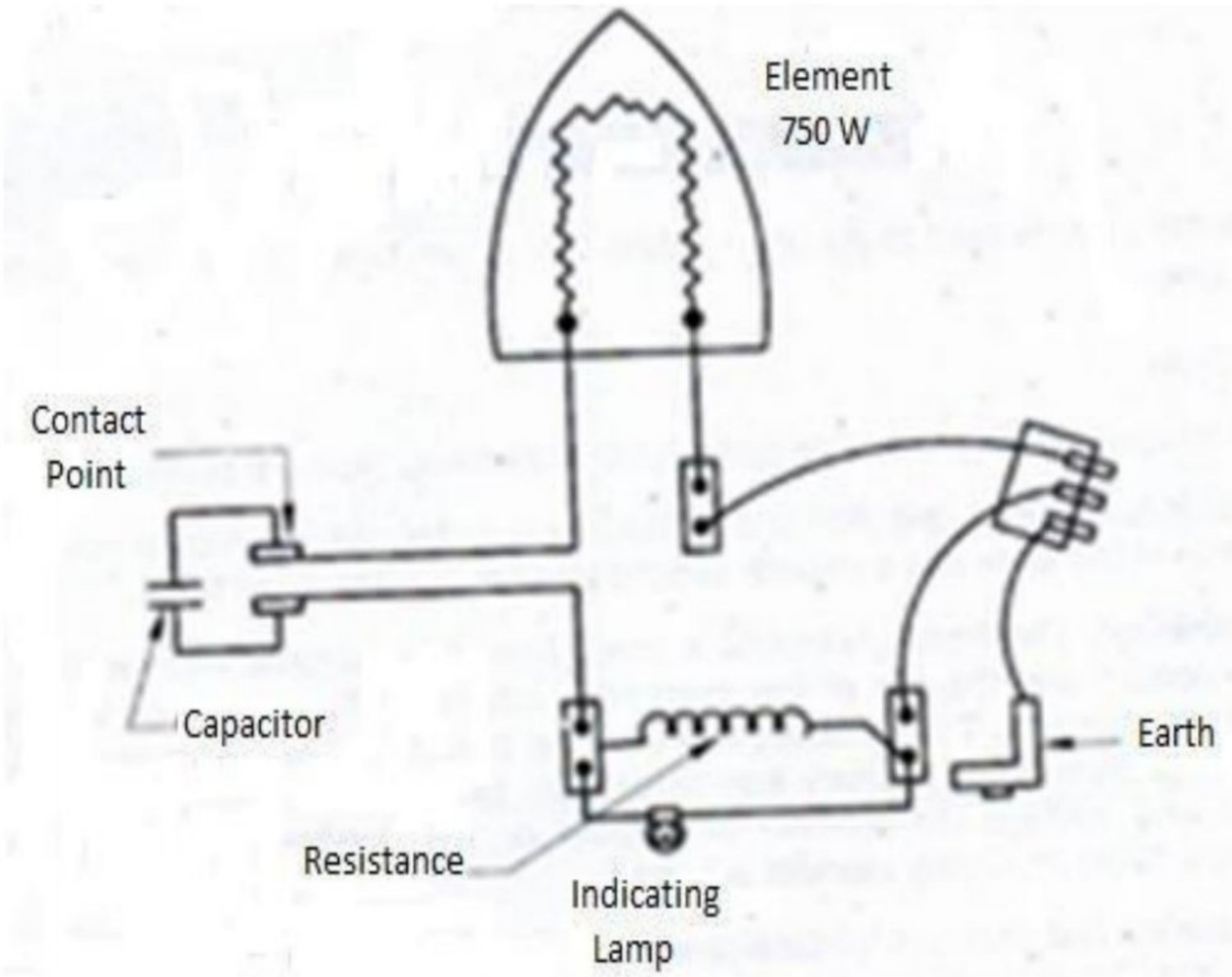

REC		
DEPT. OF EEE		
	MAX MARKS	OBT MARKS
ATTENDANCE	5	
OBSERVATION	5	
RECORD	5	
VIVA	5	
TOTAL	20	

Result:

Thus the study of iron box was completed.

Scanned with OKEN Scanner
Scanned with OKEN Scanner