TRIBHUVAN UNIVERSITY

INSTITUTE OF ENGINEERING

PULCHOWK CAMPUS

BME-2017/21

Design of Machine Elements for a Two-Stage Plastic Shredder

by

Manish Timsina

Prajwal Koirala

Prasanna Koirala

Sandip Gautam

A PROJECT REPORT ON

MACHINE DESIGN

SUBMITTED TO THE DEPARTMENT OF MECHANICAL AND AEROSPACE ENGINEERING

DEPARTMENT OF MECHANICAL AND AEROSPACE ENGINEERING

LALITPUR, NEPAL

SEPTEMBER, 2020

ABSTRACT

Plastics have outgrown most man-made materials and have long been under environmental scrutiny. One of the solutions to this problem is the recycling of plastic products. Plastic-Shredders are tools designed to break hollow or solid plastic wastes into smaller chunks which can be used as raw materials for a variety of applications. To build a plastic shredder, machine elements have to be designed. The main goals of this project were to design and select various machine elements which can work efficiently and in a coordinated manner to assemble a Two-Stage Plastic Shredding Machine. Theoretical and computational design and selection of Machine elements: Motor, V-Belts, Shaft, and Bearing were performed. We present the CAD Model of the designed machine. A plant layout of the machine shop is shown. However, this is a theoretical design and fabrication of the machine has not been performed.

Keywords: Plastic, Waste, Recycling, Shredder, Machine Elements

ACKNOWLEDGEMENT

We would like to express our sincere gratitude to the Department of Mechanical Engineering for providing us with the opportunity and their kind coordination and support to develop the project. We would like to thank and express our gratitude to all our respective subject teachers for sharing their precious knowledge, and their constant support and guidance. We are thankful to all the people who contributed to the preparation of this project. We have tried the best to make our project error-free.

Suggestions and recommendations from the readers are highly appreciated.

Manish Timsina	[074BME619]
Prajwal Koirala	[074BME627]
Prasanna Koirala	[074BME628]
Sandip Gautam	[074BME635]

TABLE OF CONTENTS

ABSTRACT i

ACKNOWLEDGEMENT ii

LIST OF FIGURES v

LIST OF TABLES vi

LIST OF SYMBOLS vii

CHAPTER ONE: INTRODUCTION 1

1.1 Backgroud 1
1.1.1 Plastics 1
1.1.2 Plastic Shredder 2
1.2 Objectives: 2
1.2.1 Main Objective: 2
1.2.2 Specific Objectives: 2
1.3 Scope 2
1.4 Limitations 3

CHAPTER TWO: LITERATURE REVIEW 4

2.1 Plastic Shredders 4
2.2 Machine Elements 4
2.2.1 Motor 4
2.2.1.1 Three-phase induction motor: 4
2.2.2 Belts 5
2.2.2.1 Classification of Belts: 6
2.2.3 Shaft 7
2.2.4 Bearing 8
2.2.4.1 Rolling contact bearings: 8

CHAPTER THREE: METHODOLOGY 11

3.1 Study of Plastics and Plastics Shredders 11
3.2 Selection of various Machine Elements 11
3.3 Design of Plastic Shredders and Machine Elements 11
3.4 Design of Plant Layout 11

CHAPTER FOUR: DESIGN THEORY 13

4.1 Motor 13
4.1.1 Selection of motor: 13
4.1.2 Yield Strength: 13
4.2 Belts 14
4.2.1 Belt Selection 14
4.2.2 Design Parameters and formulae 14
4.3 Shaft 15
4.3.1 Design Parameters and formulae 15
4.4 Bearings 16
4.4.1 Bearing selection 16
4.4.2 Design parameters and formulae 16
4.4.2.1 Bearing Life 16
4.4.2.2 Bearing Load Life at Rated Reliability 17

CHAPTER FIVE: DESIGN CALCULATIONS 19

5.1 Motor 19
5.1.1 For Shredder 19
5.1.2 For Grinding Operation: 20
5.2 Belt 20
5.3 Shaft 22
5.3 Bearing: 23

CHAPTER SIX: DESIGN 25

6.1 Plastic Shredder Design: 25
6.2 Plastic Shredder with a conveyor system 25

CHAPTER SEVEN: PLANT LAYOUT 27

CHAPTER EIGHT: CONCLUSIONS AND RECOMMENDATIONS 29

REFERENCES 30
APPENDIX: DESIGN FIGURES AND TABLES 31

LIST OF FIGURES

Figure 1 Annual global plastic production, measured in tonnes per year 1
Figure 2 Induction motor stator 5
Figure 3 The speed length characteristics of flat and round belts 6
Figure 4 Aspects of shaft design 7
Figure 5 Nomenclature of a ball bearing 9
Figure 6 Ball and rollers contact area 9
Figure 7 Various types of rolling contact bearings 10
Figure 8 Relation between the speed of shaft and coefficient of friction between different types of bearings 10
Figure 9 Methodology flowchart 12
Figure 10 Stress-Strain diagram 13
Figure 11 Shear, Moment and Torque diagram for shaft 22
Figure 12 Design of plastic shredder 25
Figure 13 Design of plastic shredder with conveyor 26
Figure 14 Plant Layout 27
Figure 15 Notch-sensitivity charts for steels and UNS A92024-T wrought aluminum alloys subjected to reversed bending or reversed axial loads 34
Figure 16 Notch-sensitivity curves for materials in reversed torsion. 34

LIST OF TABLES

Table 1 The designation of V-belts and various characteristics.....31
Table 2 Length correction factor K2 31
Table 3 Power ratings of standard V-belts 32
Table 4 V-belt Parameters for Kb and Kc 32
Table 5 Angle of contact factor K1 for V-Flat Belts.....33
Table 6 First Iteration Estimates for Stress-Concentration Factors Kt and Kts. 33

LIST OF SYMBOLS

Y	=	Yield Strength
N	=	Rpm of blade assembly
L_p	=	Pitch length
C	=	Centre to centre distance
H_a	=	Allowable power
K_1	=	Angle of contact correction factor
K_2	=	Belt length correction factor
H_d	=	Design power
N_D	=	No. of belts
F_c	=	Centrifugal tension
K_f	=	Fatigue stress concentration factor due to bending
K_{fs}	=	Fatigue stress concentration factor due to torsion
q	=	Notch sensitivity
K_t	=	Stress concentration factor due to bending
K_{ts}	=	Stress concentration factor due to torsion
M_a	=	Alternating bending moment
M_m	=	Midrange bending moment
T_a	=	Alternating torque
T_m	=	Midrange torque
S_{ut}	=	Ultimate tensile strength of the material
S_e	=	Endurance limit
C_{10}	=	Catalog rating
L_{10}	=	Minimum life
L_R	=	Rated revolutions
L_D	=	Desired revolutions
L	=	Life in hours

CHAPTER ONE: INTRODUCTION

1.1 Backgroud

1.1.1 Plastics

The first synthetic plastic- Bakelite- was produced in 1907, marking the beginning of the global plastics industry. However, rapid growth in global plastic production was not realized until the 1950s. In 2018, global plastics production almost reached 360 million tons (“Plastics – the Facts”, 2019).

A world without plastics, or synthetic organic polymers, seems unimaginable today. Plastic is a unique material with many benefits: it’s cheap, versatile, lightweight, and resistant. This makes it a valuable material for many functions. However, the synthetic plastic products are accumulating in the environment to the point where they are creating problems for wildlife and their habitats as well as for human populations.

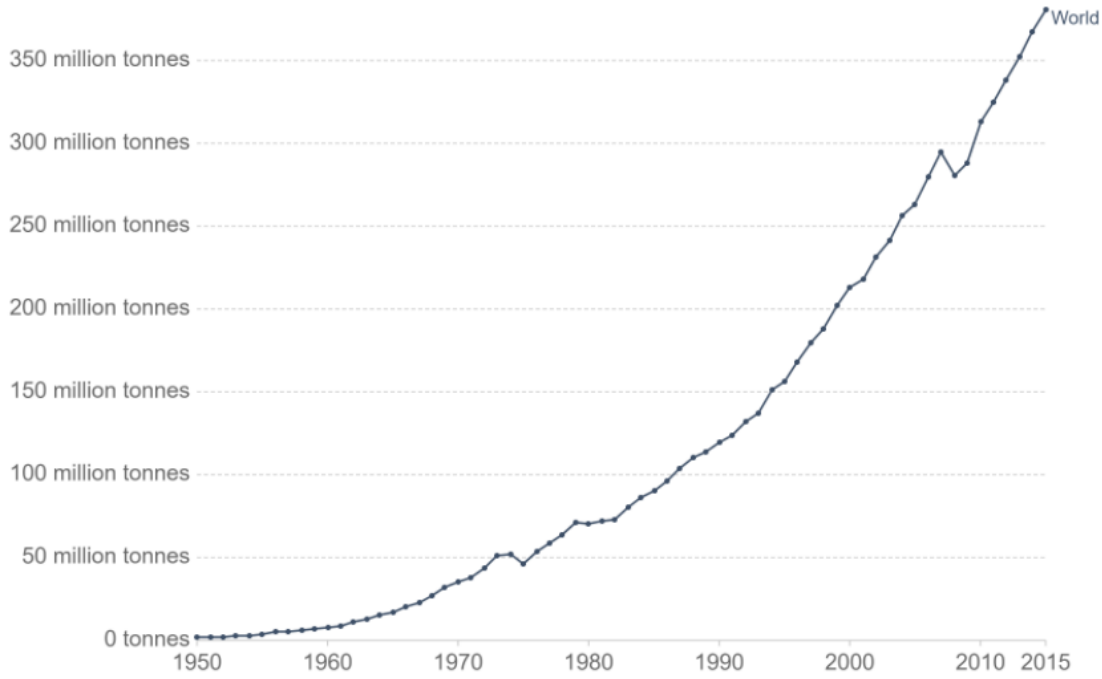

Figure 1 Annual global plastic production, measured in tonnes per year (Geyer, Jambeck, & Law, 2017)

Synthetic plastics are largely non-biodegradable; they tend to persist in natural environments. Moreover, they are improperly disposed of at or near the location where they end their usefulness to the consumer and go to landfills. This is a huge problem for the environment and the natural ecosystem. One of the solutions to this problem is the recycling of plastic products. It seems obvious, but we’re not doing a great job of it. The overall goal of this project is to design a model of Plastic Shredder that cuts plastic products into smaller pieces which can then be reused in different applications.

1.1.2 Plastic Shredder

Plastic waste is a silent threat to the environment and their disposal is a serious issue for waste managers. Plastic Shredders are an efficient, easy to handle, cost-effective tool for solid waste management. They are designed for plastic wastes like plastic bottles, pipes, drums, and other items. In the process, plastic items are fed into the shredder. Rotating blades break the plastic down into smaller chunks. These pieces are then collected and washed and treated in washing and recycling plants and used as raw materials for other products like storage containers, toys, packaging bags, and consumer electronics. Plastic Shredders not only help with size reduction but also with recouping waste plastic. They can be operated from low speed to moderate speed with high torque. Shredder is mainly used in all kinds of hollow or solid plastic material. The various applications of plastic shredders include the plastic industry, laboratories, pharmaceutical companies, manufacturing units, catering industry, food processing facilities, bio-medical waste management plants, nursing homes, healthcare facilities, cardboard manufacturing units, supermarkets and many more.

1.2 Objectives:

1.2.1 Main Objective:

The main objective of the project is:

- To design machine elements for a Two-Stage Plastic Shredder with a single power source

1.2.2 Specific Objectives:

The specific objectives of the project are:

- To study different machine elements such as motor, shaft, bearings, and belts.
- To select and design machine elements used in a two-stage plastic shredder.
- To make a solid model of the machine.
- To create a basic layout of the machine shop.

1.3 Scope

In this project, we mainly focus on designing and selecting machine elements for the given application. Attention is given to the machine design aspect of machine building. A deeper analysis was made on the machine elements. Mostly the literature reviews were done on components that build the machine. Ultimately, the goal is to design a two-stage plastic shredder with efficient machine elements that work in a coordinated manner.

1.4 Limitations

The design is based on analytical and experimental results. The design parameters are subjected to change due to the iterative design process. The fabrication of the plastic-shredder machine has not been performed. Since the attention was mostly given to the design of the components of the machine and not the machine itself; the cost analysis and efficiency calculation were not performed.

CHAPTER TWO: LITERATURE REVIEW

2.1 Plastic Shredders

Kshirsagar et al. (2014) describe the experimentation of can or plastic bottle crusher machine and analysis of mechanism used in the machine. Delda et al. (2019) designed and fabricated plastic shredder with a single shaft mechanism. Rana et al. (2020) used hooper cover, hooper, cutters, bearing, shaft, gear, flange coupling, key, electric motor, frame and spacers to design and fabricate cost-effective shredder. They calculated the power required to carry out the shredding operation and designed the machine element accordingly. Ekman (2018) used a geared motor, worm gear, V-belt drive, gear reducer and shafts with pulleys to design a plastic shredder.

For proper functioning, the design of the two-stage plastic shredder includes different parts: conveyor, hopper, blade system, stand and machine elements. The size and portability of the machine were considered and the machine parts were selected accordingly. The machine elements chosen for the machine are Motor, V-Belt, shaft, and bearing.

This project is focused on designing these machine elements. The general scope of this literature review is to explore the different machine elements mentioned above for the purpose of designing them.

2.2 Machine Elements

2.2.1 Motor

Induction motors are widely-used industrial motors. These motors cover almost 80 percent of the industries. These are also called as Asynchronous Motors because an induction motor always runs at a speed lower than synchronous speed. Synchronous speed means the speed of the rotating magnetic field in the stator.

There are two types of induction motor: single phase induction motor and three-phase induction motor.

2.2.1.1 Three-phase induction motor:

Like all induction motors, a three-phase induction motor mainly consists of stator and rotor.

The stator is the stationary part of the motor where three-phase AC is supplied. It consists of a 3 phase winding with a core and metal housing. Windings are such places that they are electrically and mechanically 120 degrees apart from in space. The

winding is mounted on the laminated iron core to provide a low reluctance path for generated flux by AC currents.

The rotor is the part of the motor which will be in a rotation to give mechanical output for a given amount of electrical energy. It consists of a shaft, short-circuited copper/aluminium bars, and a core.

Other components like bearing for proper alignment and rotation of shaft and fan for cooling purpose are placed.

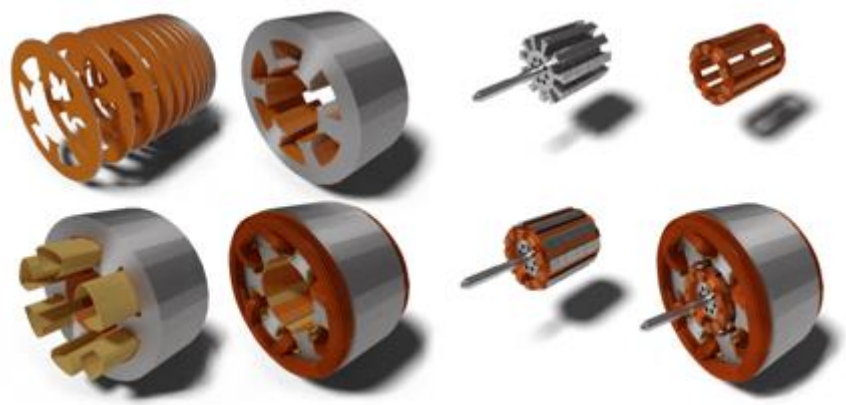

Figure 2 Induction motor stator (Source: https://www.electrical4u.com)

Working:

When three-phase AC is supplied to the stator windings, the rotating magnetic field is generated. These rotating magnetic fields induce a voltage in rotor bars and hence short-circuit current start flowing in the rotor bars. The magnetic field is generated in the rotor which interacts with the stator. Rotor begins to rotate in the direction of the synchronously revolving rotating magnetic field to oppose its cause.

When the rotor decelerates then the relative motion between the rotor and the rotating magnetic field increases and again more current is induced which causes the motor to accelerate.

Slip is a measure of the difference between the speed of the rotating magnetic field and rotor speed. The frequency of the rotor current = slip × supply frequency.

2.2.2 Belts

Belts are one of the most prominent power transmission elements used in machinery. They can help transmit power over a long distance and can effectively act as vibration isolators enhancing the system life by folds. Their simplicity makes them easier to work with.

Belts transmit power primarily due to the friction between the belt and the pulley and thus most of them are required to be kept in tension for higher load-bearing capacity. So many belt configurations are provided with a tensioner to compensate for the elongation of the belts.

2.2.2.1 Classification of Belts:

Belts are classified into four principal types according to their geometry and use (Budynas & Nisbett, 2015).

2.2.2.1.1 Flat Belt:

As the name suggests they have a flat geometry. They can be used in both directions and can transmit power at relatively higher speed and over a longer distance. Flat belts are made with leather, polyamides and metals.

Flat belts need crowned pulley and are also common in domestic machinery. Flat belts can be patched together in case of failures so they are ideal for low powered domestic machinery.

2.2.2.1.2 Round Belts:

Round Belts are similar to the flat belts except for their geometry. But round belts need grooved pulleys to maintain sufficient surface friction to transmit power.

Belt Style	Belt Size, in	Ratio of Pulley Speed to Belt Length, rev/(ft · min) Up to 250	250 to 499	500 to 1000
Flat	0.50 × 0.062	0.38	0.44	0.50
	0.75 × 0.078	0.50	0.63	0.75
	1.25 × 0.090	0.50	0.63	0.75
Round	$\frac{1}{4}$	1.50	1.75	2.00
	$\frac{3}{8}$	2.25	2.62	3.00
	$\frac{1}{2}$	3.00	3.50	4.00
	$\frac{3}{4}$	5.00	6.00	7.00

Figure 3 The speed length characteristics of flat and round belts (Budynas & Nisbett, 2015)

2.2.2.1.3 V-belts:

The V-belts have a cross-section of a truncated 'V' and are used to transmit higher power over a shorter distance. They are used in conjunction with sheaved pulleys. They are widely used where a larger load is to be applied.

2.2.2.1.4 Timing-belts:

Timing belts are used for precision and control. Both the pulleys and belts are toothed and are thus to be operated only in 1:1 ratios. They have limited use but are ubiquitous where precision is required.

2.2.3 Shaft

A shaft is an important machine component. It is usually a rotating member of circular cross-section either solid or hollow, which transmits power and rotational motion. Shafts are mounted with machine elements such as gears, pulleys, flywheels, clutches and sprockets. Shafts are widely used in engineering applications, such as machines, automobiles, steamships and so on.

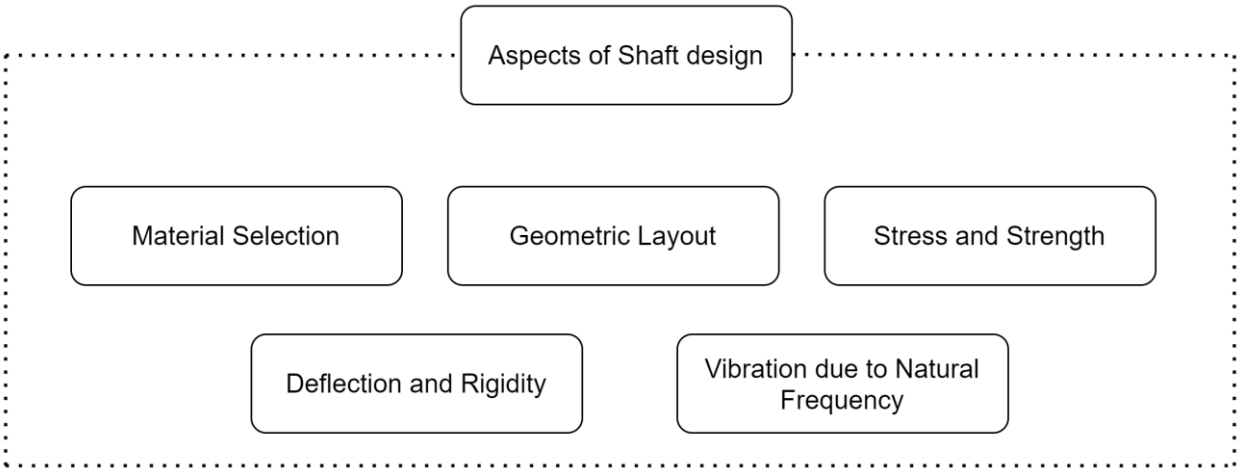

Figure 4 Aspects of shaft design

Many factors are affecting the life of a shaft, including the parameters of the notch, size, heat treatment methods, loading frequency, stress wave, corrosion, high temperature and so on. Also, life is affected greatly by the installation conditions, boundary and lubricant conditions, environment and other factors. However, several secondary affecting factors have not been determined until now (Ma & Li, 2011).

Most shafts serve to transmit torque from an input gear or pulley, through the shaft, to an output gear or pulley. The shaft itself must be designed to support the tensional stress and tensional deflection. It is also necessary to provide a means of transmitting the torque between the shaft and the gears. Common torque-transfer elements are keys, splines, set screws, pins, press or shrink fits and tapered fits. Notches due to these elements cannot be avoided in many structures and machines and notch effects have been a key problem in the study of fatigue (Budynas & Nisbett, Mechanical Engineering Design, 2015). Following factors should be considered while analyzing the effect of a notch in a machine component like shaft:

1. Concentrations of stress and strain.
2. Stress gradients.
3. Mean stress effects and residual stresses.
4. Local yielding.
5. Development and growth of cracks.

2.2.4 Bearing

Bearings have become an integral part of modern moving machinery. The purpose of a bearing is to provide relative positioning and rotational freedom while transmitting a load between two structures, usually a shaft and housing (Hamrock & Anderson, 1983). It performs three basic functions: carrying the load, reducing friction, and positioning moving machine parts. To reduce frictional resistance and wear and in some cases to carry away the heat generated, a layer of fluid (known as a lubricant) may be provided (Khurmi & Gupta, 2005). Bearings are manufactured to take pure radial loads, pure thrust loads, or a combination of the two kinds of loads (Budynas & Nisbett, 2015). Different bearings are designed to withstand different types of loads.

2.2.4.1 Rolling contact bearings:

In rolling contact bearings, the contact between the bearing surfaces is rolling instead of sliding as in Sliding contact bearings. Rolling bearings attempt to eliminate friction and sliding between surfaces in a junction by introducing interfaces such as balls or rollers which rotate or roll in as opposed to sliding. They operate efficiently in low to medium speed. They are designed to handle both radial and axial load. The rolling contact bearings are used in lower speed applications like gearboxes and machine tools spindle.

A typical rolling contact bearing consists of rolling elements, an inner ring, an outer ring, and a retainer. The rolling elements in a rolling contact bearing are either balls or rollers made of specially hardened steel. In a typical installation, the outer ring is fixed and doesn’t move and the inner ring is fitted to the shaft. As the shaft rotates, the inner ring also rotates. The rolling elements are held in position by the retainer, also called a separator. The retainer positions the rolling element evenly around the rings and ensures that the load is distributed equally in each rolling element when the shaft is turning. In addition to these parts, some rolling contact bearings are equipped with devices that protect them from dirt and other types of contaminants. A Shield or Seal may be used according to the requirement.

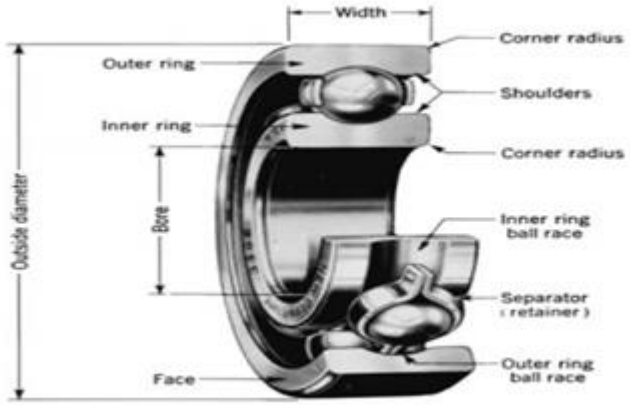

Figure 5 Nomenclature of a ball bearing (Budynas & Nisbett, 2015)

2.2.4.1.1 Types of Rolling contact bearing

Rolling contact bearings can be divided into two categories based on the shape of their rolling elements. The two categories are:

2.2.4.1.1.1 Ball Bearing:

A ball bearing is a spherical unit that is used to provide low-friction movement for a bearing block. Ball bearings are described as having point contact; that is, each ball contacts the race in a very small patch – a point, in theory. For ball bearings (assuming a perfectly spherical bearing and no deformation), the contact surface is just a single point. Even once deformation is accounted for, the amount of surface where the ball is contacting the rail is limited. This creates an inherent strength limit for the balls.

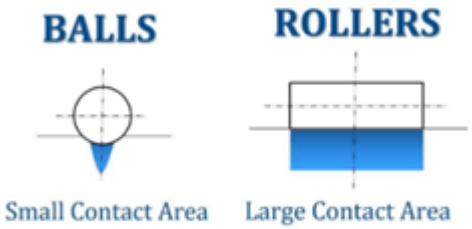

Figure 6 Ball and rollers contact area (Image Source: NB Corporation of America)

2.2.4.4.4.2 Roller Bearing:

A roller bearing is a cylindrical unit that accomplishes the same objective as a roller bearing. Similarly constructed as ball bearings, roller bearings have line contact rather than point contact. The rollers themselves come in several shapes, namely, cylindrical, spherical, tapered, and needle. The main characteristic of roller bearings is that they provide a larger area of contact and can handle loads of magnitudes higher than ball

bearings. This distributed the load more evenly, allowing roller bearings to handle heavy load operations.

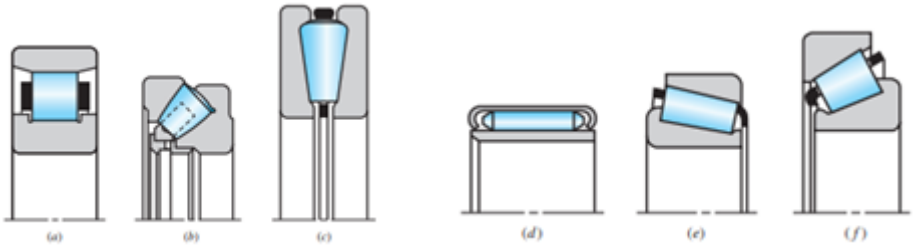

Figure 7 Various types of rolling contact bearings: (a)straight roller; (b) spherical roller, thrust; (c) tapered roller, thrust; (d) needle; (e) tapered roller; (f) steep-angle tapered roller. (Budynas & Nisbett, 2015)

A graph showing the relation between the coefficient of friction and speed of the shaft is shown in fig. (Upadhyay & Kumaraswamidhas, 2018). We see, at medium speed of shaft the coefficient of friction of roller bearing is smaller than other bearings. That's why roller bearing is preferred at medium speed applications.

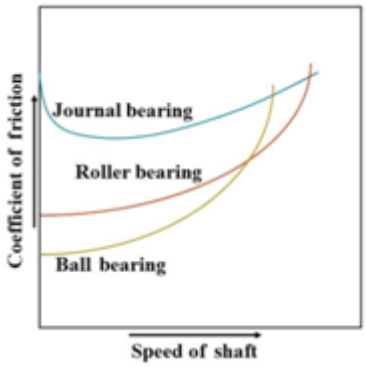

Figure 8 Relation between the speed of shaft and coefficient of friction between different types of bearings (Upadhyay & Kumaraswamidhas, 2018)

CHAPTER THREE: METHODOLOGY

3.1 Study of Plastics and Plastics Shredders

Various literatures were reviewed regarding the deformable properties of plastics and the basic requirements for the plastic shredder were assessed. Various journal articles regarding the contemporary shredders were reviewed and implemented in the preliminary design stage.

3.2 Selection of various Machine Elements

A broad list of Machine elements was made and the elements were sorted through regarding their use in contemporary shredders, design constraints and availability. The elements were chosen such that they did not compromise the performance of the machine and did not violate the project requirements.

3.3 Design of Plastic Shredders and Machine Elements

A detailed design of the shredder was made incorporating the selected machine elements. The list was reviewed and altered if they compromised the machine, and a new design was implemented if necessary. The machine elements were designed with reference to the various literature and reference books.

3.4 Design of Plant Layout

A possible plant layout was suggested for the machine. The plant layout was prepared according to the general practices.

The methodology flowchart based on these points is shown in the next page.

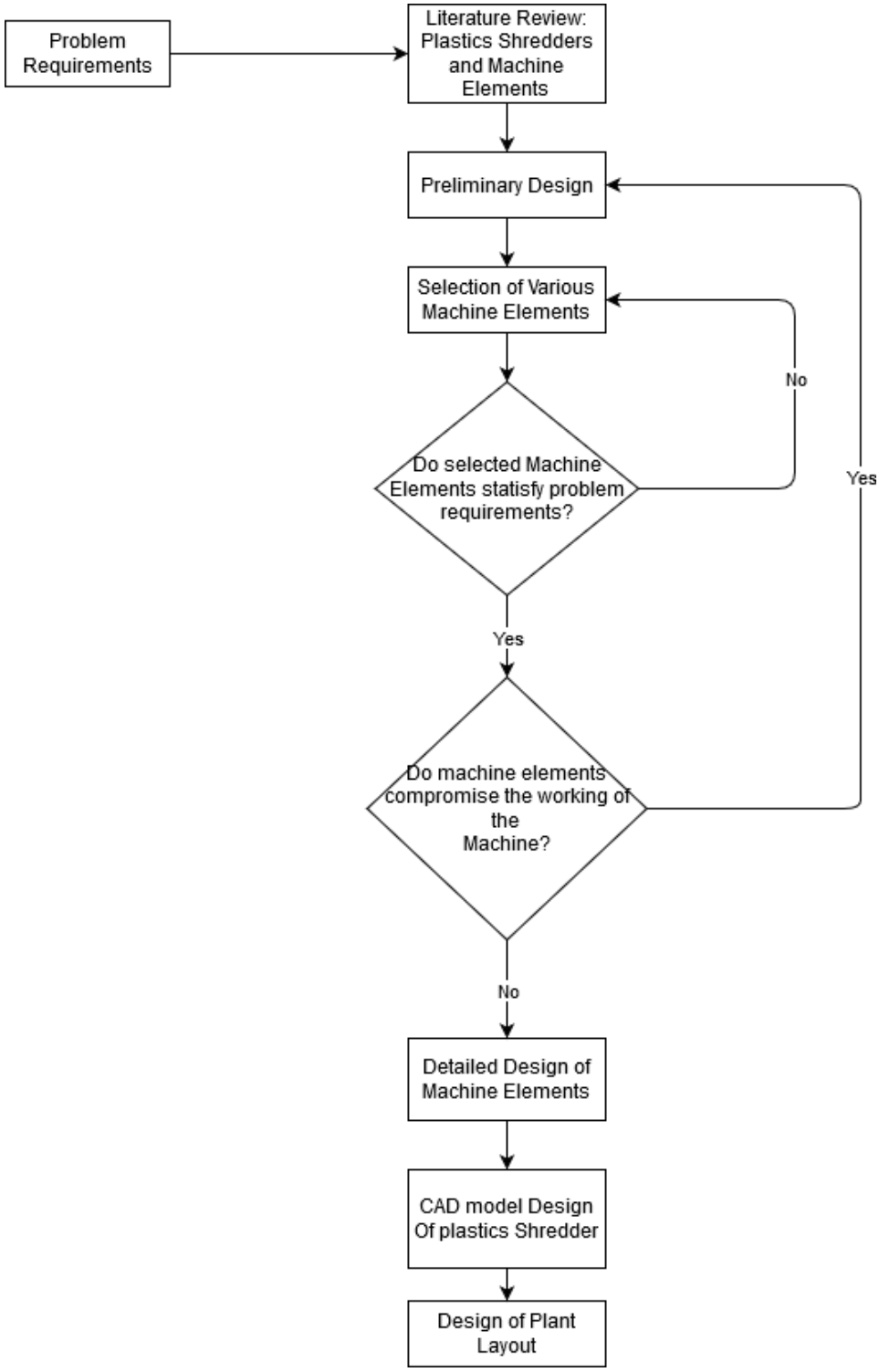

Figure 9 Methodology flowchart

CHAPTER FOUR: DESIGN THEORY

4.1 Motor

4.1.1 Selection of motor:

Three-phase induction motor is selected. It can generate more power than the single phase motor for the same current and voltage supply. And the power to weight ratio of the three-phase motor is more than the single-phase one so the overall cost is low for three-phase induction motor. Three-phase induction motors have high starting torque as compared to single-phase one.

4.1.2 Yield Strength:

The power rating of the selected motor is heavily dictated by the yield strength of the plastics.

The yield strength of the material is where the material begins to deform in a plastic fashion. Prior to the yield strength, the material will act elastically meaning that if the strain were halted at any point in the elastic portion, the material would return to its original length. Once the yield strength of the material is attained, the material will not return to its original length and will yield. The curve below, the stress-strain diagram shows how a material deforms on applying force.

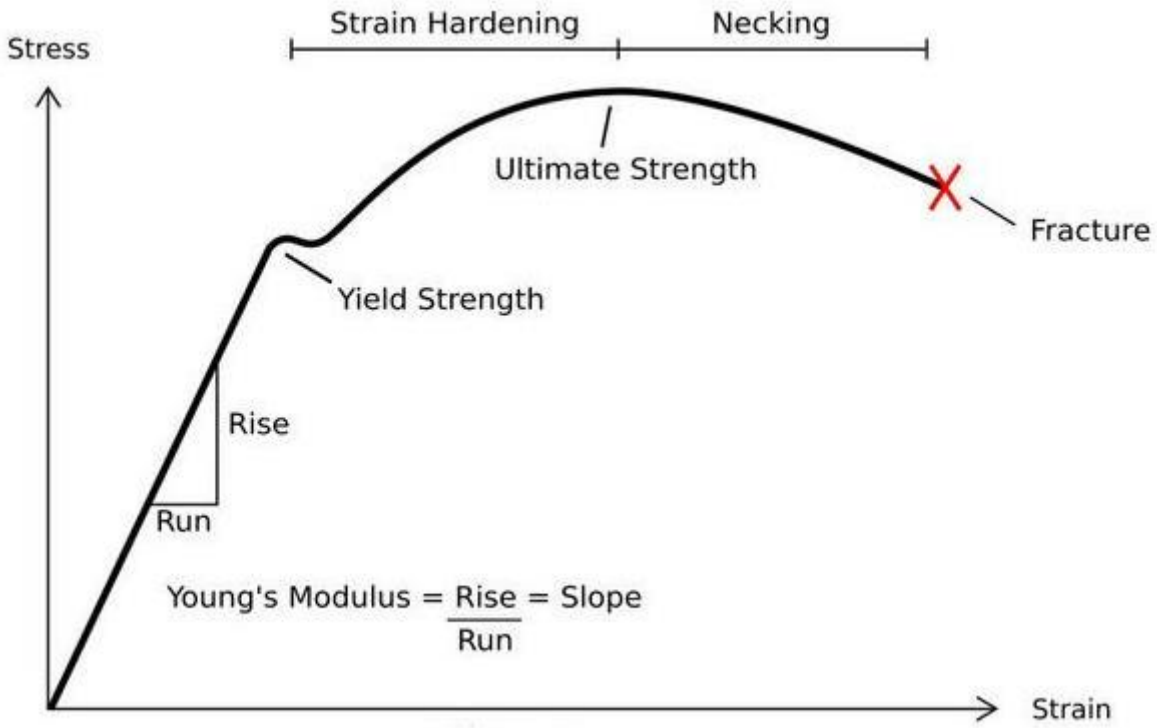

Figure 10 Stress-Strain diagram

Not all the plastics known follow the above curve. Some plastics, like composites, deform in brittle fashion without even reaching the yield point which other fracture after necking. Different plastics have different yield strength.

Based on the type of available plastics as a raw material for our operation we have opted the average Yield Strength of 80 MPa.

4.2 Belts

4.2.1 Belt Selection

V-belts were preferred over other belts for our machine in regards to higher load-bearing capacity and lower operating speed. V-belts are available in various standard sizes in the Nepalese market which also has dictated our choice.

V-belts are available only in the standard shapes and sizes. The belts are designated with English alphabets to account various properties.

4.2.2 Design Parameters and formulae

The various design parameters and formulae were accessed from Budynas, R.G. & Nisbett, J.K.(2015). Shigley's Mechanical Engineering Design Tenth Edition. New York: McGraw-Hill Education.

Formulae for Calculations:

$$L_p = 2C + \pi(D+d)/2 + (D-d)^2/(4C) \quad \ldots\ldots\ldots\ldots \quad (2.1)$$

$$C = 0.25\left\{\left[L_p - \frac{\pi}{2}(D+d)\right] + \sqrt{\left[L_p - \frac{\pi}{2}(D+d)\right]^2 - 2(D-d)^2}\right\} \quad \ldots\ldots\ldots\ldots \quad (2.2)$$

$$H_a = K_1 K_2 H_{tab} \quad \ldots\ldots\ldots\ldots \quad (2.3)$$

$$f' = .5123 \quad \ldots\ldots\ldots\ldots \quad (2.4)$$

(As given by: The Gates Rubber Company)

$$\frac{F_1 - F_c}{F_2 - F_c} = \exp(0.5123\phi) \quad \ldots\ldots\ldots\ldots \quad (2.5)$$

$$H_d = H_{nom} K_{snd} \quad \ldots\ldots\ldots\ldots \quad (2.6)$$

$$F_c = K_c\left(\frac{V}{1000}\right)^2 \quad \ldots\ldots\ldots\ldots \quad (2.7)$$

$$F_1 = F_c + \frac{\Delta F \exp(f\phi)}{\exp(f\phi) - 1} \quad \ldots\ldots\ldots\ldots \quad (2.8)$$

$$N_P = \left[\left(\frac{K}{T_1}\right)^{-b} + \left(\frac{K}{T_2}\right)^{-b} \right]^{-1}$$ ..... (2.9)

4.3 Shaft

4.3.1 Design Parameters and formulae

The various design parameters and formulae were accessed from Budynas, R.G. & Nisbett, J.K.(2015). Shigley's Mechanical Engineering Design Tenth Edition. New York: McGraw-Hill Education.

Formulae for calculation

Criteria like Goodman, DE-Gerber, ASME Elliptic and Soderberg criteria are commonly used to design the shaft diameter.

Goodman:

$$d = \left(\frac{16n}{\pi} \left\{ \frac{1}{S_e} \left[4(K_f M_a)^2 + 3(K_{fs} T_a)^2 \right]^{1/2} + \frac{1}{S_{ut}} \left[4(K_f M_m)^2 + 3(K_{fs} T_m)^2 \right]^{1/2} \right\} \right)^{1/3}$$

……..(3.1)

DE-Gerber:

$$d = \left(\frac{8nA}{\pi S_e} \left\{ 1 + \left[1 + \left(\frac{2BS_e}{AS_{ut}} \right)^2 \right]^{1/2} \right\} \right)^{1/3}$$

$$A = \sqrt{4(K_f M_a)^2 + 3(K_{fs} T_a)^2}$$

$$B = \sqrt{4(K_f M_m)^2 + 3(K_{fs} T_m)^2}$$

…… ……. (3.2)

DE-ASME Elliptic

$$d = \left\{ \frac{16n}{\pi} \left[4\left(\frac{K_f M_a}{S_e}\right)^2 + 3\left(\frac{K_{fs} T_a}{S_e}\right)^2 + 4\left(\frac{K_f M_m}{S_y}\right)^2 + 3\left(\frac{K_{fs} T_m}{S_y}\right)^2 \right]^{1/2} \right\}^{1/3}$$

……. ……. (3.3)

DE-Soderberg

$$\frac{1}{n}=\frac{16}{\pi d^3}\left\{\frac{1}{S_e}\left[4\left(K_f M_a\right)^2+3\left(K_{fs} T_a\right)^2\right]^{1/2}+\frac{1}{S_{yt}}\left[4\left(K_f M_m\right)^2+3\left(K_{fs} T_m\right)^2\right]^{1/2}\right\}$$

……. (3.4)

We calculate the fatigue stress concentration factors due to bending and torsion as

$K_f = 1 + q\,(K_t - 1)$ ……. (3.5)

$K_{fs} = 1 + q\,(K_{ts} - 1)$ ……. (3.6)

4.4 Bearings

4.4.1 Bearing selection

From the literature review, it is found that Roller bearings offer better efficiency in medium speed and can be used to provide intermittent service. They are easy to mount, the cost of maintenance is low, and are reliable. Roller bearings have a larger area of contact and can handle loads of higher magnitude. Among the various types of roller bearings, a cylindrical bearing best suits our application. It can handle the radial load in our machine and has the lowest coefficient of friction of any form of rolling contact bearing. It is readily available in the market in standard sizes and is cost-effective as well.

4.4.2 Design parameters and formulae

The various design parameters and formulae were accessed from Budynas, R.G. & Nisbett, J.K.(2015). Shigley's Mechanical Engineering Design Tenth Edition. New York: McGraw-Hill Education.

4.4.2.1 Bearing Life

When the ball or roller of rolling-contact bearings rolls, contact stresses occur on the inner ring, the rolling element, and on the outer ring. If a bearing is clean and properly lubricated, is mounted and sealed against the entrance of dust and dirt, is maintained in this condition, and is operated at reasonable temperatures, then metal fatigue will be the only cause of failure.

The life measure of an individual bearing is defined as the total number of revolutions (or hours at a constant speed) of bearing operation until the failure criterion is developed.

The rating life of roller bearings is defined as the number of revolutions (or hours at a constant speed) that 90 percent of a group of bearings will achieve or exceed before the failure criterion develops. The term minimum life L10 is used as synonyms for rating

life. The most commonly used rating life is 106 revolutions. Rating life is an arbitrary reference point.

4.4.2.2 Bearing Load Life at Rated Reliability

Using a regression equation of the form

$FL^{1/a} = \text{constant}$ ……. (4.1)

the result of many tests for various kinds of bearings result in a = 10/3 for roller bearings

A catalog load rating is defined as the radial load that causes 10 percent of a group of bearings to fail at the bearing manufacturer's rating life. We shall denote the catalog load rating as C_{10}. The catalog load rating is often referred to as a Basic Dynamic Load Rating, or sometimes just Basic Load Rating, if the manufacturer's rating life is 106 revolutions.

In selecting a bearing for a given application, it is necessary to relate the desired load and life requirements to the published catalog load rating corresponding to the catalog rating life. From Eq. (1)

$F_R L_R^{1/a} = F_D L_D^{1/a}$ ..... (4.2)

where the units of L_R and L_D are revolutions and the subscripts R and D stand for Rated and Desired.

It is sometimes convenient to express the life in hours at a given speed. Accordingly, any life L in revolutions can be expressed as

$L = 60\, L_n$ ..... (4.3)

Where L is in hours, n is in rev/min, and 60 min/h is the appropriate conversion factor.

Incorporating Eq. (4.3) into Eq.(4.2),

$F_R (L_R n_R 60)^{1/a} = F_D (L_D n_D 60)^{1/a}$ ……. (4.4)

Solving Eq. (4.4) for F_R, and noting that it is simply an alternate notation for the catalog load rating C_{10}

$C_{10} = F_R = F_D \left(\frac{LD}{LR}\right)^{1/a} = F_D \left(\frac{LDnD60}{LRnR60}\right)^{1/a}$ ……. (4.5)

It is sometimes convenient to define $X_D = L_D/L_R$ as a dimensionless multiple of rating life.

Formulae for calculation

For 90% reliability,

$C_{10} (L_R n_R 60)^{1/a} = F_D(L_D n_D 60)^{1/a}$ ……. (4.6)

For reliability greater or equals to 90%, assume a = 10/3 for roller bearing

$$C_{10} = F_D \left[\frac{XD}{XD+(\theta-XD)(1-RD)^{(1/b)}}\right]^{1/a} \qquad R \geq 0.9 \qquad \ldots\ldots\ldots \qquad (4.7)$$

And, $X_D = \frac{L}{L10} = \left(\frac{60LDnD}{60LRnR}\right)$

CHAPTER FIVE: DESIGN CALCULATIONS

5.1 Motor

Calculation of Motor power:

5.1.1 For Shredder

For this we have to consider the yield strength of plastic.

Yield Strength (Y) = $\frac{F}{A}$

Where, F=Shredding force

A = Area at which force acts

= [(width of blade) * (cutting length)] * [no. of blade at one time)]

= (8*30)*1

= 240 mm^2

For plastics, average yield strength (Y) = 80 Mpa

Force(F) = Y * A

= $(80 * 10^6) * (240 * 10^{-6})$

= 19200 N

= 19.2 kN

Torque required (T) = F * r_{mean}

= (19.2 kN) * (45mm)

= 864 Nm

Power required (of motor), P = T ω

$= T * \frac{2*pie*N}{60}$

Rpm of the blade assembly (N) = 20 rpm (recommended rpm)

$P = 864 * \frac{2*3.14*20}{60}$

= 1809.55 watt

= 2.42 HP

With factor of Safety (S.F) = 3/2.42 =1.24, we choose motor of 3HP for the shredding operation.

5.1.2 For Grinding Operation:

Assuming similar power required for the grinding operation as that for shredding operation, we add up another 3 HP to the required power for single motor ie total of 6HP.

Commercially available **6HP motor** has following specifications,

For our choice:

Brand: Sunride Electricals

Class: E

Full load rpm : 1500 rpm

Power: 6HP

5.2 Belt

Design of V-belts:

Let the distance between the driven and driving shaft be .5m

Velocity ratio = 1:1

Desired power requirement = 3 Hp

= 2.24 KW

Belt Selection:

Type B is selected with: width(a) = 16 mm

thickness(b) = 11 mm

min. sheave dia(d_{min}) = 135mm

Again, let the pitch diameter (D) = 210mm

Pitch length (L_p) = 1660 mm ; using eqn (2.1)

With correction:

Corrected pitch length (L_p) = L_p – Length conversion diameter

=1660 – 45

=1615

For analysis, we consider inside circumference of 1600 mm

Now, the pitch length, L_p= 1600 + 45 = 1645 mm

Center to Center distance (C) = 492.6 mm ; using eqn(2.2)

Now, V = $\frac{\pi * d * N}{60}$

= 16.5 m/s

Since, the transmission ratio = 1:1;

The contact angle = π rad

And exp (.5123φ) = 5

Angle of Contact correction Factor, K_1 = 1

Belt length correction Factor, K_2 = .95

Allowable Power (H_a) = $K_1 K_2 H_{tab}$; $H_{tab}$is extrapolated from the appropriate table

= 3.128

Design Power, $H_d = H_{nom} * k_s * n_d$

= 2.24 * 1.1 * 1.1

= 2.71 KW

No. of Belts(N_b) ≥ $\frac{Hd}{Hq}$ = $\frac{2.71}{3.293}$ = .82

Thus, the no. of belts = 1

Centrifugal tension (F_c) = 45.91N ;using eqn(2.7)

ΔF = 164.24 N

Largest Tension (F1) = 123.18 N ;using eqn(2.8)

Belt Tensions:

$T_1 = T_2$ = 560.93 N

Then, the service life (Np) = 2.31 * 1010passes ;using eqn(2.9)

Thus, Np = 109 passes

The V-belt has been designed for the required specifications with required service life.

5.3 Shaft

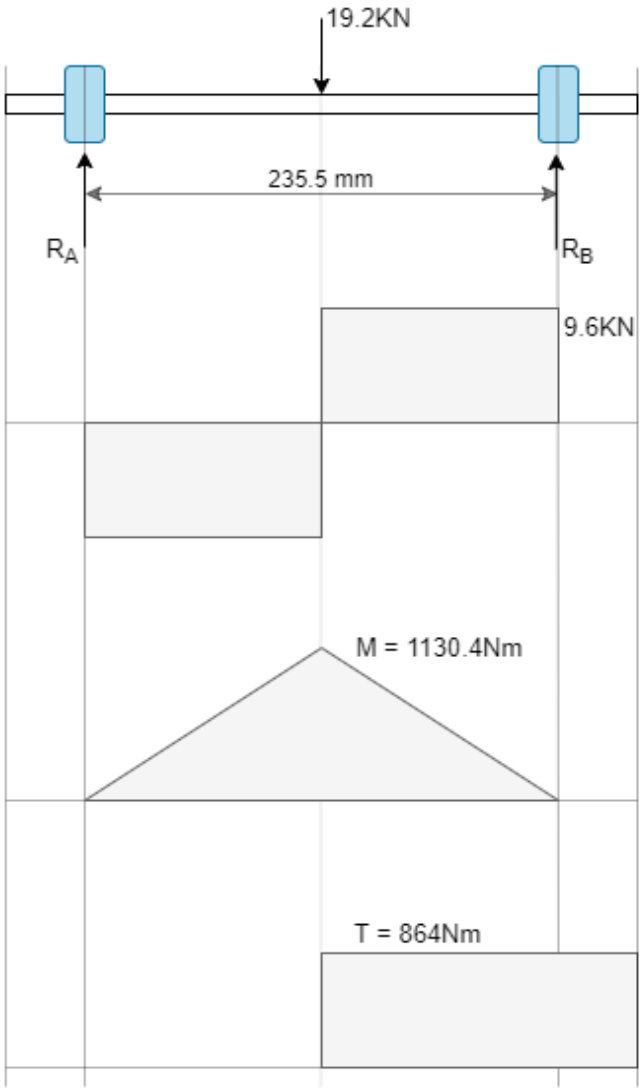

Figure 11 Shear, Moment and Torque diagram for shaft

M_C = 9.6 * 117.75 = 1130.4 Nm

Then, M_a = 1130.4 Nm and T_m= 864 Nm

Take r/d = 0.1

Then from appropriate table, we take the estimates, K_t = 1.7, K_{ts} = 1.5

Assume d = 20mm and r = 2mm

For AISI 1020 CD steel,

S_{ut} = 470 MPa

From appropriate figure we take, q = 0.7 and q_s = 0.8

Now,

$K_f = 1 + q(K_t-1) = 1.49$

$K_{fs} = 1 + q_s(K_{ts}-1) = 1.4$

And $k_a = a\ S_{ut}^{b}$

For machined shaft, a = 4.51 and b = -0.265

So,

$k_a = 4.51\ (470)^{-0.265} = 0.883$

$k_b = 1.24\ (20)^{-0.107} = 0.8999$

$K_c = 0.59$ (for torsion)

Therefore, $S_e = 0.883 * 0.8999 * 0.59 * 470 = 220.346$ MPa

We select DE-Goodman criteria for the conservative first design,

$$d = \left\{ \frac{16n}{\pi} \left(\frac{\left[4\left(K_f M_a\right)^2\right]^{\left(\frac{1}{2}\right)}}{S_e} + \frac{\left[3\left(K_{fs} T_m\right)^2\right]^{\frac{1}{2}}}{S_{ut}} \right) \right\}^{\left(\frac{1}{3}\right)} = 15.321\text{mm}$$

Then checking yield with this diameter

$\sigma_{max} = 134.1$ MPa

Since $S_y = 390$ MPa, $n_y = 390/134.1 = 2.91$

So more conservatively, we assume diameter 20mm.

5.3 Bearing:

Design of cylindrical roller bearing,

Let us assume combined reliability of 0.96.

$\therefore R_D = \sqrt{0.96} = 0.979$

We have,

$F_D = 9.6$ KN, n = 20 r.p.m. (shredder)

For cylindrical roller bearing, a= 10/3

Let the desired life be 10 Kh.

Taking manufacturer's data (Manufacturer 2),

$L_{10} = 60\ L_R\ n_R = 10^6$

$X_D = 0.02, \quad \theta = 4.459, \quad b = 1.483$

$$X_D = \frac{L}{L10} = \frac{60*10000*20}{10^6} = 12$$

And, $$C_{10} = F_D \left[\frac{XD}{XD+(\theta-XD)(1-RD)^{(1/b)}}\right]^{1/a} = 9.6 \times 10^3 \left[\frac{12}{0.02+(4.459-0.02)(1-0.979)^{(1/1.483)}}\right]^{3/10}$$

$$= 27.767 \text{ KN}$$

A **02-62 cylindrical roller bearing** will fulfill the requirement.

For 02-62 cylindrical roller bearing,

Outer diameter (OD) = 62 mm

And width = 17 mm

CHAPTER SIX: DESIGN

6.1 Plastic Shredder Design:

The design of the plastic shredder required two operations viz. Grinding and Shredding but with only one specified power source. This design constraint has been resolved by coupling the two functional requirements. The shaft of the motor has been coupled with a pulley and a gearbox which provide power for the grinding and shredding operations respectively. This design feature though violates the 'The Independence Axiom' (Suh, 1990), is considered satisfactory for the machine as the power requirements and load-characters of both the operations are assumed to be similar.

The machine has been incorporated with a hopper which directly feeds plastics into the shredder. A collector bin has been placed underneath the grinder for collection which can be further provided with a door for periodic collection of the plastics.

The shredder and grinder have been designed according to the contemporary designs and their numerical assessment has been ignored in this report.

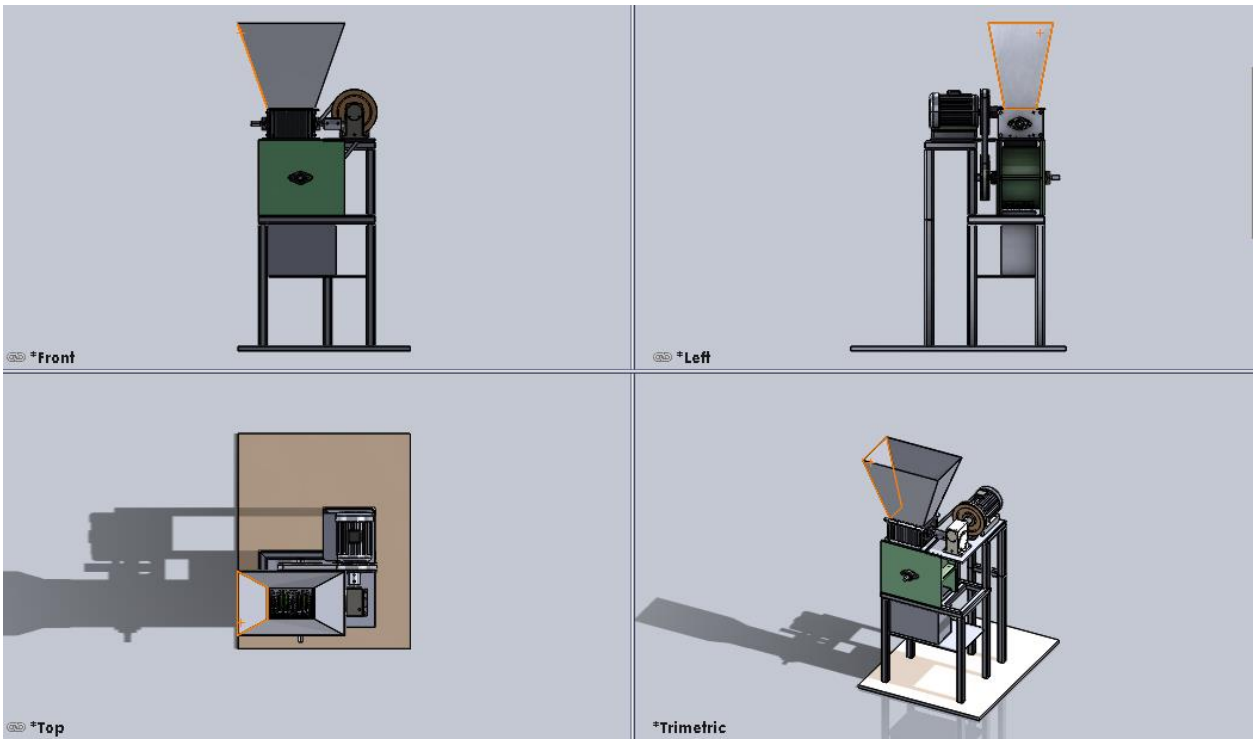

Figure 12 Design of plastic shredder

6.2 Plastic Shredder with a conveyor system

The machine has been corresponded with a conveyor system for the continuous feeding of the system. The conveyor ensures a steady feed rate into the machine to minimize

any high variations in loading. This system has been incorporated into the system for the workers' convenience as well.

The driver system for the conveyor is not shown in the design and requires a separate power source.

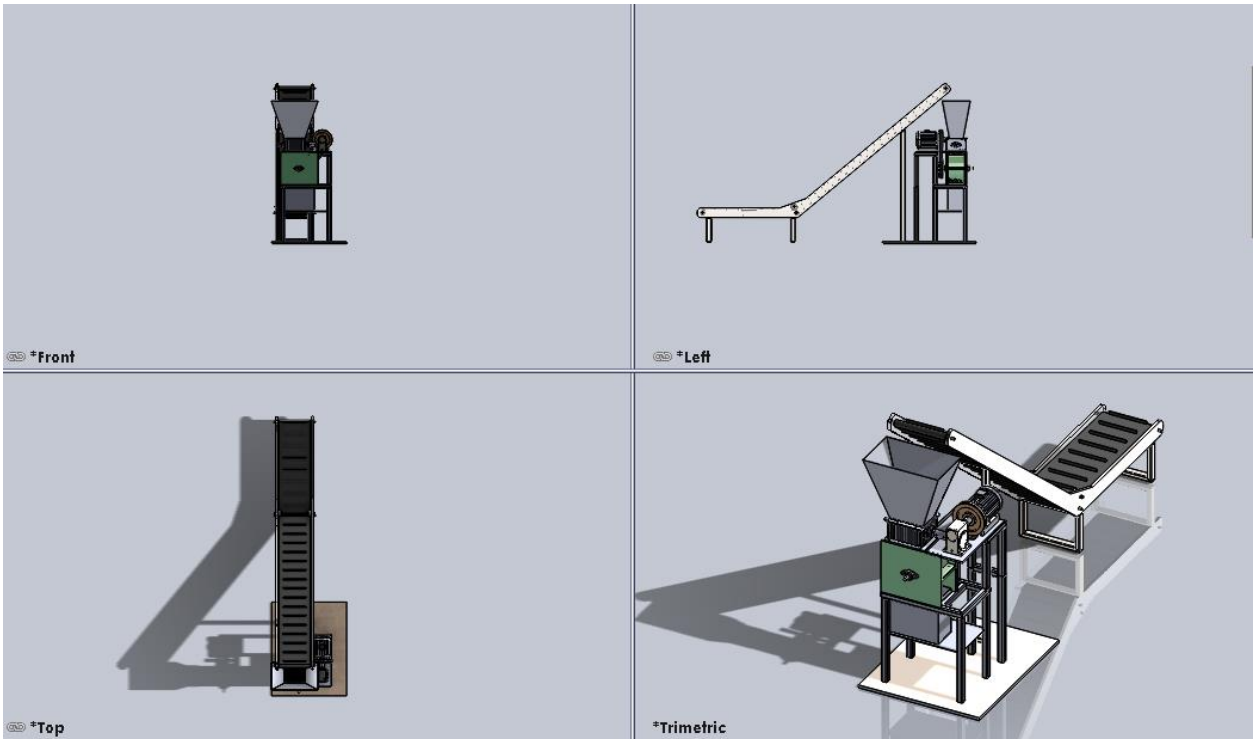

Figure 13 Design of plastic shredder with conveyor

CHAPTER SEVEN: PLANT LAYOUT

The layout is the planning, designing, and physical arrangement of processing and support areas within an industry to create a design that supports company and operating strategies. Different phases lead to an organized method for developing a layout. After the location of the project site is defined, planners are oriented to the main planning phase where business plans, strategy, focus, and so on, are integrated to develop block layouts.

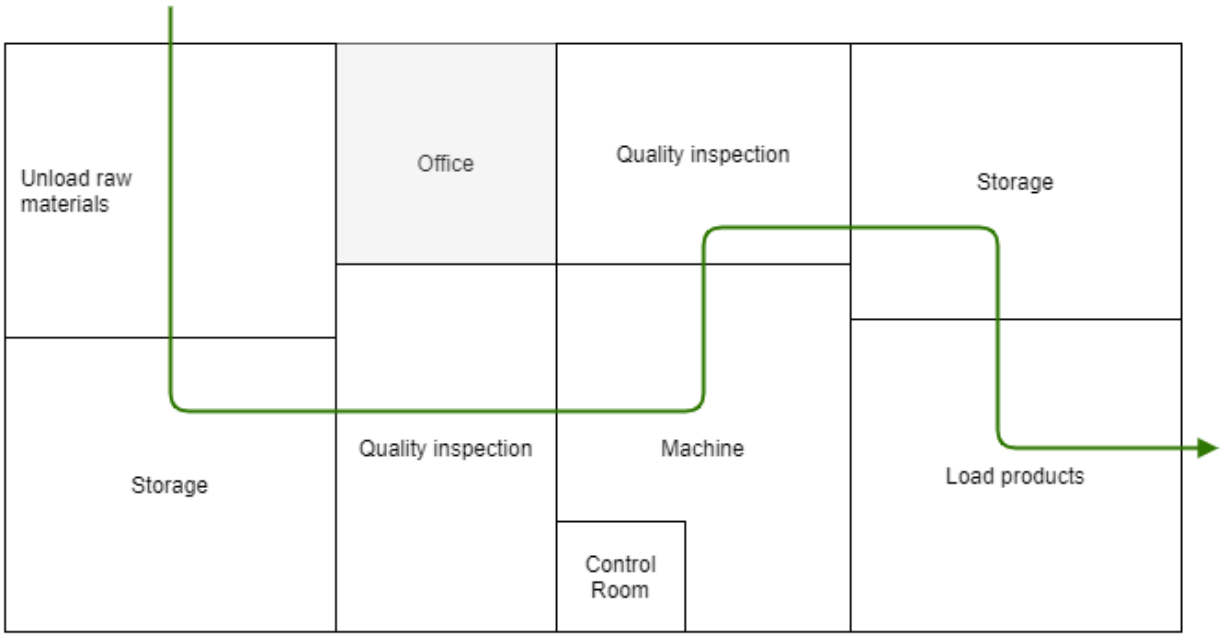

Figure 14 Plant Layout

Plant layout implying the development of physical equipment and facilities aims at the integration of machines, materials and men for economical and productive operations. The systematic arrangement of plant and its ancillaries in accordance with the nature of the job to afford maximum convenience to the workers to operate the activities assigned to them is the basic objective of this plant layout. The arrow through the layout shows the flow of material as it is converted from raw material to the final product of the industry, and a certain amount of value is added to the material during this process. The key features of the plant can be summarized as:

- The raw materials are stored after they are unloaded and before they are processed.
- The quality inspection takes place twice; before and after the material is subjected to manufacturing processes.

- The machine room accommodates the Two-Stage Plastic Shredder machine and all the manufacturing processes take place in the room.
- The products of the plant are stored before shipping them.
- There is a provision of office to supervise, control and coordinate the manufacturing.

CHAPTER EIGHT: CONCLUSIONS AND RECOMMENDATIONS

Plastic is an essential part of our life. But a big disadvantage of plastic is that plastic is difficult to decompose. So plastic has to be recycled. We have designed a two-stage plastic shredding machine that can be a great source for plastic waste management. We studied and selected the machine elements and designed the machine. We have presented a solid model of the machine and plant layout of the machine system which will be quite helpful to industries for efficient plastic recycling. In today's world with increased plastic consumption this machine will prove quite effective. However, we have not fabricated the machine and further works are required to address several issues related to the machine, including the following:

- Fabricating the machine with appropriate materials.
- Determining the safety aspects of the machine
- Calculating the actual efficiency of the machine elements and the machine system.
- Calculating the installation and working cost.

REFERENCES

[1] Plastics - the Facts. (2019). Retrieved from https://www.plasticseurope.org/en/resources/market-data

[2] Geyer, R., Jambeck, J. R., & Law, K. L. (2017, July 19). Production, use, and fate of all plastics ever made. *Science Advances* .

[3] Kshirsagar, V. N., Choudhary, D. K., & Ninawe, P. P. (2014). *An automatic approach for can/plastic bottle crushrer machine.* International Journal Of Research In Aeronautical And Mechanical Engineering.

[4] Delda, R. N., Pineda, J. D., Cabahug, A., & Tallara, K. W. (2019). Single Knife set plastic shredder machine. *Academia* .

[5] Rana, J., Shah, S., Shah, M., Prajapati, M., & Mehta, H. (2020). Design and fabrication of plastic bottle shredder. *International Research Journal of Engineering and Technology(IRJET)* .

[6] Ekman, R. (2018). *Development of a Plastic.* Faculty of Engineering LTH, Lund University, Department of Design Sciences, Lund.

[7] Three Phase Induction Motor Definition & Working Principle. (2019, November 27). Retrieved from https://www.electrical4u.com/working-principle-of-three-phase-induction-motor/

[8] Budynas, R. G., & Nisbett, J. K. (2015). *Mechanical Engineering Design.* New York: McGraw-Hill Education.

[9] Ma, P., & Li, Y. T. (2011, September). Effect of notched parameters on low cycle fatigue life of shaft under bending-torsional loading. *Key Engineering Materials* .

[10] Hamrock, B. J., & Anderson, W. J. (1983). *Rolling-Element Bearings.* Cleveland, Ohio : NASA Technical Reports Server (NTRS).

[11] Khurmi, R. S., & Gupta, J. K. (2005). *A Textbook of Machine Design.* Ram Nagar, New Delhi: Eurasia Publishing House (Pvt.) Ltd.

[12] Upadhyay, R. K., & Kumaraswamidhas, L. A. (2018). *Handbook of Materials Failure Analysis.* New Delhi : Elsevier.

[13] Suh, N. P. (1990). *The Principles of Design.* Oxford University Press.

APPENDIX: DESIGN FIGURES AND TABLES

The following tables are taken from Budynas,R.G. & Nisbett, J.K.(2015). Shigley's Mechanical Engineering Design Tenth Edition. New York: McGraw-Hill Education.

Table 1 The designation of V-belts and various characteristics

Section	Circumference, in
A	26, 31, 33, 35, 38, 42, 46, 48, 51, 53, 55, 57, 60, 62, 64, 66, 68, 71, 75, 78, 80, 85, 90, 96, 105, 112, 120, 128
B	35, 38, 42, 46, 48, 51, 53, 55, 57, 60, 62, 64, 65, 66, 68, 71, 75, 78, 79, 81, 83, 85, 90, 93, 97, 100, 103, 105, 112, 120, 128, 131, 136, 144, 158, 173, 180, 195, 210, 240, 270, 300
C	51, 60, 68, 75, 81, 85, 90, 96, 105, 112, 120, 128, 136, 144, 158, 162,173, 180, 195, 210, 240, 270, 300, 330, 360, 390, 420
D	120, 128, 144, 158, 162, 173, 180, 195, 210, 240, 270, 300, 330, 360,390, 420, 480, 540, 600, 660
E	180, 195, 210, 240, 270, 300, 330, 360, 390, 420, 480, 540, 600, 660

Table 2 Length correction factor K2

	Nominal Belt Length, in				
Length Factor	A Belts	B Belts	C Belts	D Belts	E Belts
0.85	Up to 35	Up to 46	Up to 75	Up to 128	
0.90	38–46	48–60	81–96	144–162	Up to 195
0.95	48–55	62–75	105–120	173–210	210–240
1.00	60–75	78–97	128–158	240	270–300
1.05	78–90	105–120	162–195	270–330	330–390
1.10	96–112	128–144	210–240	360–420	420–480
1.15	120 and up	158–180	270–300	480	540–600
1.20		195 and up	330 and up	540 and up	660

Table 3 Power ratings of standard V-belts

Belt Section	Sheave Pitch Diameter, in	Belt Speed, ft/min 1000	2000	3000	4000	5000
A	2.6	0.47	0.62	0.53	0.15	
	3.0	0.66	1.01	1.12	0.93	0.38
	3.4	0.81	1.31	1.57	1.53	1.12
	3.8	0.93	1.55	1.92	2.00	1.71
	4.2	1.03	1.74	2.20	2.38	2.19
	4.6	1.11	1.89	2.44	2.69	2.58
	5.0 and up	1.17	2.03	2.64	2.96	2.89
B	4.2	1.07	1.58	1.68	1.26	0.22
	4.6	1.27	1.99	2.29	2.08	1.24
	5.0	1.44	2.33	2.80	2.76	2.10
	5.4	1.59	2.62	3.24	3.34	2.82
	5.8	1.72	2.87	3.61	3.85	3.45
	6.2	1.82	3.09	3.94	4.28	4.00
	6.6	1.92	3.29	4.23	4.67	4.48
	7.0 and up	2.01	3.46	4.49	5.01	4.90
C	6.0	1.84	2.66	2.72	1.87	
	7.0	2.48	3.94	4.64	4.44	3.12
	8.0	2.96	4.90	6.09	6.36	5.52
	9.0	3.34	5.65	7.21	7.86	7.39
	10.0	3.64	6.25	8.11	9.06	8.89
	11.0	3.88	6.74	8.84	10.0	10.1
	12.0 and up	4.09	7.15	9.46	10.9	11.1
D	10.0	4.14	6.13	6.55	5.09	1.35
	11.0	5.00	7.83	9.11	8.50	5.62
	12.0	5.71	9.26	11.2	11.4	9.18
	13.0	6.31	10.5	13.0	13.8	12.2
	14.0	6.82	11.5	14.6	15.8	14.8
	15.0	7.27	12.4	15.9	17.6	17.0
	16.0	7.66	13.2	17.1	19.2	19.0
	17.0 and up	8.01	13.9	18.1	20.6	20.7
E	16.0	8.68	14.0	17.5	18.1	15.3
	18.0	9.92	16.7	21.2	23.0	21.5
	20.0	10.9	18.7	24.2	26.9	26.4
	22.0	11.7	20.3	26.6	30.2	30.5
	24.0	12.4	21.6	28.6	32.9	33.8
	26.0	13.0	22.8	30.3	35.1	36.7
	28.0 and up	13.4	23.7	31.8	37.1	39.1

Table 4 V-belt Parameters for Kb and Kc

Belt Section	K_b	K_c
A	220	0.561
B	576	0.965
C	1 600	1.716
D	5 680	3.498
E	10 850	5.041
3V	230	0.425
5V	1098	1.217
8V	4830	3.288

Table 5 Angle of contact factor K1 for V-Flat Belts

$\frac{D-d}{C}$	θ, deg	K_1 VV	K_1 V Flat
0.00	180	1.00	0.75
0.10	174.3	0.99	0.76
0.20	166.5	0.97	0.78
0.30	162.7	0.96	0.79
0.40	156.9	0.94	0.80
0.50	151.0	0.93	0.81
0.60	145.1	0.91	0.83
0.70	139.0	0.89	0.84
0.80	132.8	0.87	0.85
0.90	126.5	0.85	0.85
1.00	120.0	0.82	0.82
1.10	113.3	0.80	0.80
1.20	106.3	0.77	0.77
1.30	98.9	0.73	0.73
1.40	91.1	0.70	0.70
1.50	82.8	0.65	0.65

Table 6 First Iteration Estimates for Stress-Concentration Factors Kt and Kts.

	Bending	Torsional	Axial
Shoulder fillet—sharp ($r/d = 0.02$)	2.7	2.2	3.0
Shoulder fillet—well rounded ($r/d = 0.1$)	1.7	1.5	1.9
End-mill keyseat ($r/d = 0.02$)	2.14	3.0	—
Sled runner keyseat	1.7	—	—
Retaining ring groove	5.0	3.0	5.0

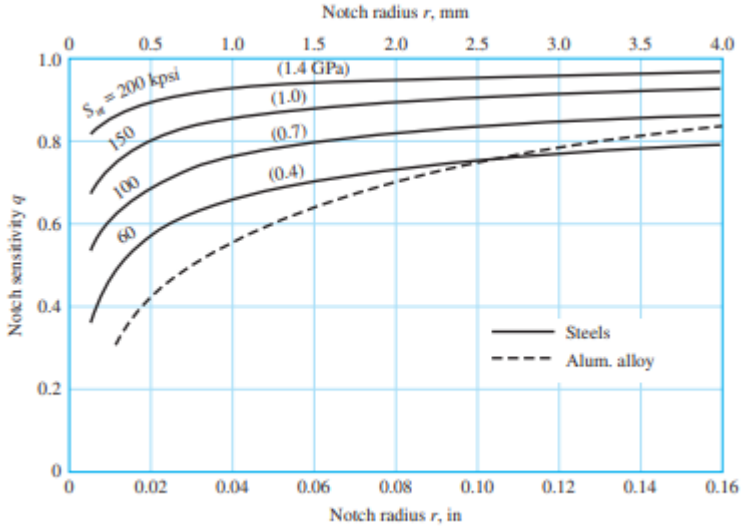

Figure 15 Notch-sensitivity charts for steels and UNS A92024-T wrought aluminum alloys subjected to reversed bending or reversed axial loads

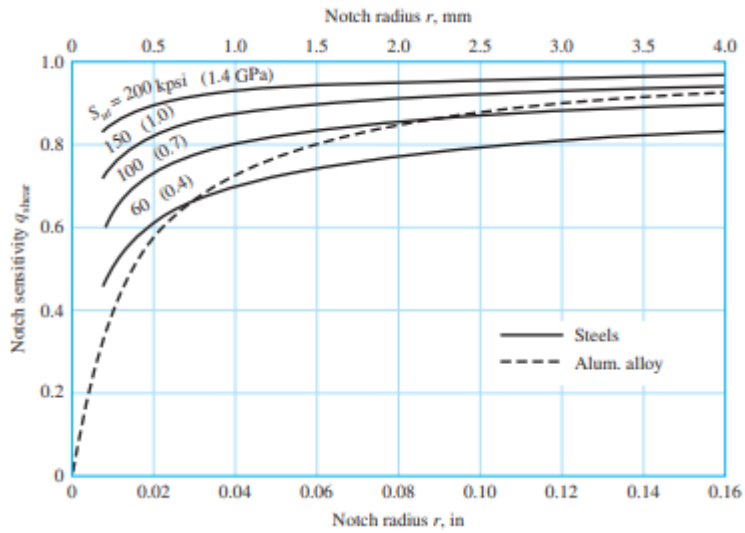

Figure 16 Notch-sensitivity curves for materials in reversed torsion.