Design, Modeling, and Control of Active Hydraulic Suspension System For Vehicles

Nitesh Subedi[1] and Prajwal Koirala[1*]
[1]Department of Mechanical Engineering, Institute of Engineering, Tribhuvan University
*Corresponding Author:
074bme627.prajwal@pcampus.edu.np

Number of figures: 12
Number of tables: 6
Word count: 2764

Abstract
Suspension systems have been extensively used in automobiles for better ride comfort and stability. Long rides on irregular roads and infrastructure problems like uncomfortable seating may have a very bad impact on the human body. To reduce this factor, an active suspension system that uses hydraulic piston-cylinder arrangement to actuate necessary force is designed. The proposed hydraulic system uses a PID controller, which controls the hydraulic pump rpm and valve opening. The response of the active system is compared against the response of a passive suspension system for three different road profiles. Finally, ADAMS/MATLAB co-simulation was carried out to ascertain the validity of the system with a non-linear wishbone system modeled in ADAMS. It is found that the proposed active suspension system has a more effective capacity to reject the road disturbances.

Keywords
Hydraulics, MATLAB/Simulink, PID, Quarter car, Suspension

Date of Submission: 12/11/2020

1. Introduction
When passengers evaluate the ride quality of a vehicle, many factors like acoustic quality, comfort of seats, climate control system, etc. come into play making it a subjective opinion. A suspension system is used to provide passengers with a comfortable ride primarily by isolating them from vibrations and shock, improving mobility and facilitating vehicle control (Stone and Ball 2004). A good suspension system rejects track level variations like bumps and road noises, keeping the passengers well isolated from these disturbances. A conventional solution is to use passive components like springs and dampers to mitigate the effects of these disturbances. For better ride comfort and ride safety, however, semi active or active suspension systems are preferred.

Semi active suspension systems are identical to passive one but with some control of damping coefficient is achieved by switching the characteristics of dampers. Consequently, this gives the possibility of the damper reaction forces. However, since it is a semi-active system, no active force can be applied and therefore, total roll and pitch elimination is impossible (Xue et al. 2011). An active suspension is one including an actuator that can supply active force, which is regulated by a control algorithm using data from sensors attached to the vehicle. An active suspension is composed of an actuator and a mechanical

spring and a damper (Jager 1990).This system acquires the ability to reduce acceleration of sprung mass continuously as well as to minimize suspension deflection, which results in progression of tire grip with the road surface, thus, brake, grip control and vehicle maneuverability can be considerably improved (Dishant et al. 2017). In this paper, we propose a PID controlled active suspension system modeled with ADAMS and MATLAB/Simulink with hydraulic actuation for generation of required force. Finally, the controller is deployed on a non-linear system designed in ADAMS for the validation of the proposed technique.

Symbol	Description
M	Sprung mass (quarter-car)
k	Spring constant of passive suspension system
B	Damping constant of passive suspension system
M_W	Unsprung mass (wheel)
k_W	Spring constant of the wheel
r	Road disturbance in vertical direction
z	Vertical displacement of the sprung mass
z_W	Vertical displacement of the unsprung mass
F	Force generated by active suspension system

Table 1. Symbols used in Quarter Car Model and their meaning

2. Methods and Materials

2.1 Modeling of the system

Various models like quarter car, half car, full car, etc have been used to simplify the dynamics of vehicle suspension systems. Figure 1 represents a quarter car model. The quarter-car model has two degrees of freedom, describing the vertical vibrations of a sprung mass and an unsprung mass. The sprung mass represents the vehicle body and the unsprung mass represents the wheel. A passive suspension system comprising a spring-damper system connects the two masses. The wheel properties in the radial direction are modeled by the spring that links the unsprung mass to the road (Lozia and Zdanowicz 2016).

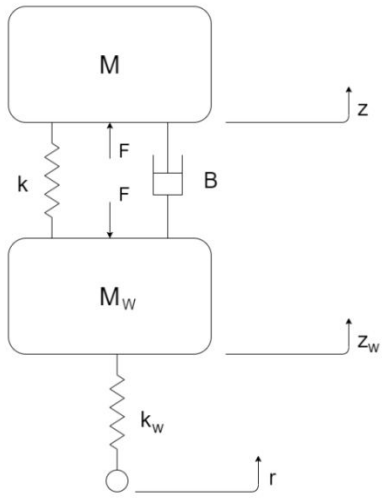

Figure 1. Quarter Car Model

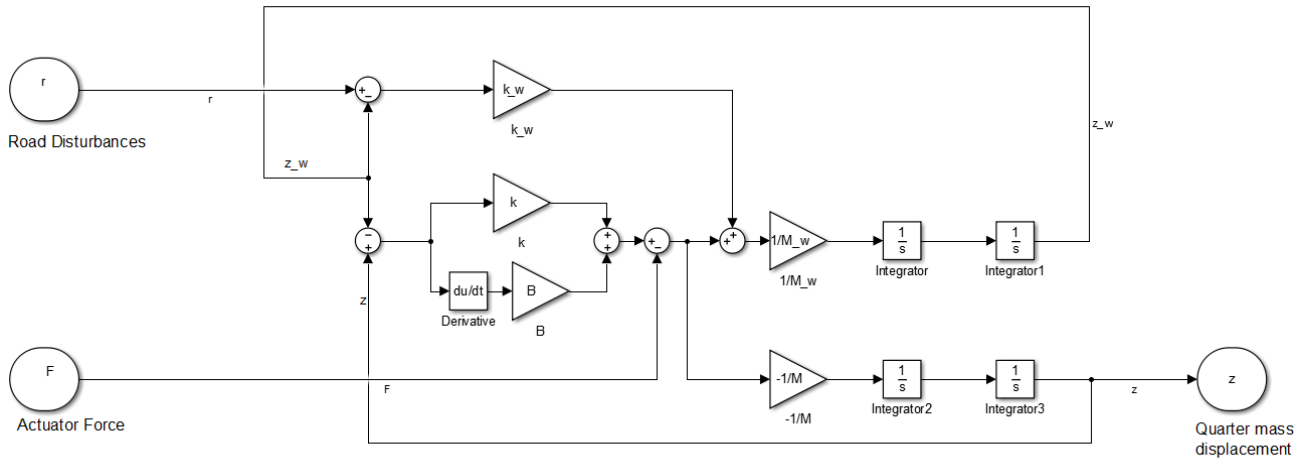

Figure 2. Block diagram representation of quarter car model in Simulink

2.2 Mathematical Modeling of the Vehicle

Following equation governs the dynamics of the unsprung mass:

$$M_w \ddot{z_w} = k_w(r - z_w) + k(z - z_w) + B(\dot{z} - \dot{z_w}) - F \qquad (1)$$

Similarly, for the sprung mass:

$$M\,\ddot{z} = k(z_w - z) + B(\dot{z_w} - \dot{z}) + F \qquad (2)$$

For this system of quarter car, we choose 4 state variables, namely x_1, x_2, x_3 and x_4 such that:
x_1 = displacement of sprung mass = z
x_2 = velocity of sprung mass = $\dot{z}$
x_3 = relative displacement of sprung mass w.r.t unsprung mass = z - z_w
x_4 = relative velocity of sprung mass w.r.t. unsprung mass $=\dot{z} - \dot{z_w}$
Then, the time derivatives of these state variables are given by:

$$\dot{x_1} = \dot{z} = x_2 \qquad (3)$$

$$\dot{x_2} = \ddot{z} = \frac{k}{M}(z_w - z) + \frac{B}{M}(\dot{z_w} - \dot{z}) + \frac{F}{M} = \left(-\frac{k}{M}\right)x_3 + \left(-\frac{B}{M}\right)x_4 + \left(\frac{1}{M}\right)F \qquad (4)$$

$$\dot{x_3} = \dot{z} - \dot{z_w} = x_4 \qquad (5)$$

$$\begin{aligned}\dot{x_4} &= \ddot{z} - \ddot{z_w}\\ &= \frac{k}{M}(z_w - z) + \frac{B}{M}(\dot{z_w} - \dot{z}) + \frac{F}{M} - \frac{k}{M_w}(z - z_w) - B(\dot{z} - \dot{z_w}) + \frac{F}{M_w} - \frac{k_w}{M_w}(r - z_w)\\ &= -\frac{k}{M}x_3 - \frac{B}{M}x_4 + \frac{F}{M} - \frac{k}{M_w}x_3 - \frac{B}{M_w}x_4 - \frac{k_w}{M_w}x_3 + \frac{k_w}{M_w}x_1 - \frac{k_w}{M_w}r + \frac{F}{M_w}\\ &= \frac{k_w}{M_w}x_1 + \left(-\frac{k}{M} - \frac{k}{M_w} - \frac{k_w}{M_w}\right)x_3 + \left(-\frac{B}{M} - \frac{B}{M_w}\right)x_4 + \left(\frac{1}{M} + \frac{1}{M_w}\right)F + (-k_w/M_w)r\end{aligned}$$

(6)

From above set of equations, we can write the state space equation $\dot{x} = Ax + Bu$ as:

$$\begin{bmatrix} \dot{x}_1 \\ \dot{x}_2 \\ \dot{x}_3 \\ \dot{x}_4 \end{bmatrix} = \begin{bmatrix} 0 & 1 & 0 & 0 \\ 0 & 0 & -k/M & -B/M \\ 0 & 0 & 0 & 1 \\ k_w/M_w & 0 & -k/M - k/M_w - k_w/M_w & -B/M - B/M_w \end{bmatrix} * \begin{bmatrix} x_1 \\ x_2 \\ x_3 \\ x_4 \end{bmatrix}$$

$$+ \begin{bmatrix} 0 & 0 \\ \frac{1}{M} & 0 \\ 0 & 0 \\ \frac{1}{M} + \frac{1}{M_w} & -\frac{k_w}{M_w} \end{bmatrix} * \begin{bmatrix} F \\ r \end{bmatrix}$$

2.3 Modeling of the Hydraulic system

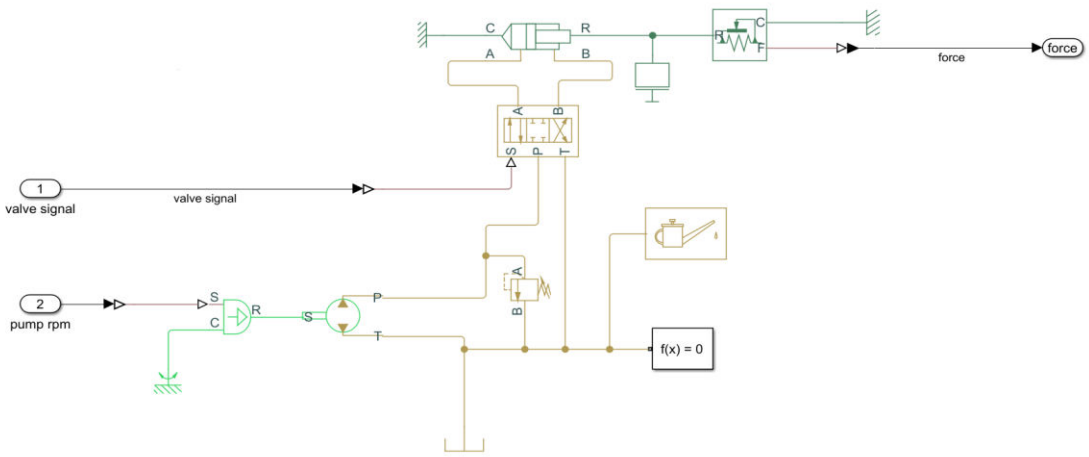

Figure 3. Hydraulic System Block Diagram

A hydraulic system is an actuation system where a fluid is used to transfer the energy from e.g. an electric motor to an actuator, such as a hydraulic cylinder. Hydraulic systems employed in several industrial and mobile applications present significant advantages, such as a high power-to-weight ratio and fast dynamic response. Hydraulic system provides a smooth displacement transition throughout changes in levels of speed, which provides an opportunity to deploy the system to the automotive systems (Locateli et al. 2014). Fluid used in this system is theoretically in-compressible. In this paper, we have modeled the hydraulic system in Simscape/Matlab and combined it with the multi-body non linear system imported from ADAMS to get the required force for the system. The model used is as shown in figure 3. A fixed displacement pump was used to generate the required pressure force. It is connected to a ideal velocity source which runs in an rpm controlled by the controller. Since power and

rpm are directly proportional, the controlled rpm will result in controlled power input. This results in a controlled pressure force generation by the system. The parameters set are as tabulated below:

Nominal Shaft Angular Velocity	500 rad/s
Nominal Pressure Gain	10^6 Pa
Nominal Kinematic Viscosity	46 cst
Nominal Fluid Density	998 kg/m^3
Volumetric Efficiency at Nominal Conditions	92%

Table 2. Displacement Pump Parameters

The fluid pumped then enters 4-way directional valve, which directs the flow path of the piston-cylinder arrangement. The valve is triggered by a signal which is regulated with respect to wheel displacement. Fluid which returns from the cylinder is directed directly to the reservoir. The basic parameters of valve are as shown in table 3.

Leakage area	3.14mm^2
Flow Discharge Coefficient	0.7
Laminar Flow Pressure Ratio	0.99
Maximum Opening	20 mm
Maximum Opening Area	314.15 mm^2

Table 3. 4 way directional valve parameters

A pressure relief valve is placed in the flow passage of pump and valve. It regulates the pressure in the flow channel and does not let pressure exceed the nominal pressure. This prevents the flow channel from the mechanical failures. If pressure exceeds the nominal pressure, the valve opens and fluid is directed to the reservoir. Valve opening dynamics is neglected and the relation between area and pressure is assumed linear. The basic parameters of relief valve are as shown in table 4.

Maximum Passage Area	2e-4 m^2
Valve Pressure Setting	3e7 Pa
Valve regulation range	3e6 Pa
Flow Discharge Coefficient	0.7
Leakage Area	1e-12 m^2
Laminar Flow Pressure Ratio	0.99

Table 4. Pressure relief valve parameters

Fluid finally reaches piston-cylinder arrangement from where the effective work is extracted. The force is sensed with a sensor which senses force with respect to piston displacement.

This force is then labeled as subsystem output and fed into force input of suspension system.

Piston Area A	1256 mm^2
Piston Area B	803.84 mm^2
Piston Stroke	100 mm
Dead Volume A	12560 mm^3
Dead Volume B	8042.24 mm^3
Specific Heat Ratio	1.4

Table 5. Basic Piston Parameters

The fluid viscosity index is highly important in mobile systems. The efficiency of the system is strongly dependent on the viscosity of the hydraulic fluid (Rydberg 2013). It is also stated that synthetic ester fluids gives lower friction losses than standard mineral oil (Rudnick 2020; Rydberg 2013). The shear stability of saturated esters is extremely good compared to mineral oil and unsaturated esters. The fluid used in our hydraulic system is iso vg 46 as it is an ester with efficiency of 70% even at higher loads.

2.4 Modeling of Controller

To obtain desired response from a system, an effective controller must be designed. Despite being a traditional control method, properties of PID controller like easy algorithm, high reliability and flexibility have made it dominant in many industries. The PID controller manipulates the error signal to output the control signal. The control signal is a sum of three terms: a proportional term that is proportional to the error, an integral term that is proportional to the integral of the error, and a derivative term that is proportional to the derivative of the error.

$$u(\mathrm{t}) = \mathrm{k_p e(t)} + \mathrm{k_i} \int_0^{\mathrm{t}} \mathrm{e}(\tau)\mathrm{d}\tau + \mathrm{k_d} \frac{\mathrm{de(t)}}{\mathrm{dt}} \tag{7}$$

The proportional gain k_p, integral gain k_i, and derivative gain k_d are controller parameters. The proportional part acts on the present value of the error, the integral represents an average of past errors and the derivative can be interpreted as a prediction of future errors (Astrom and Murray 2010).

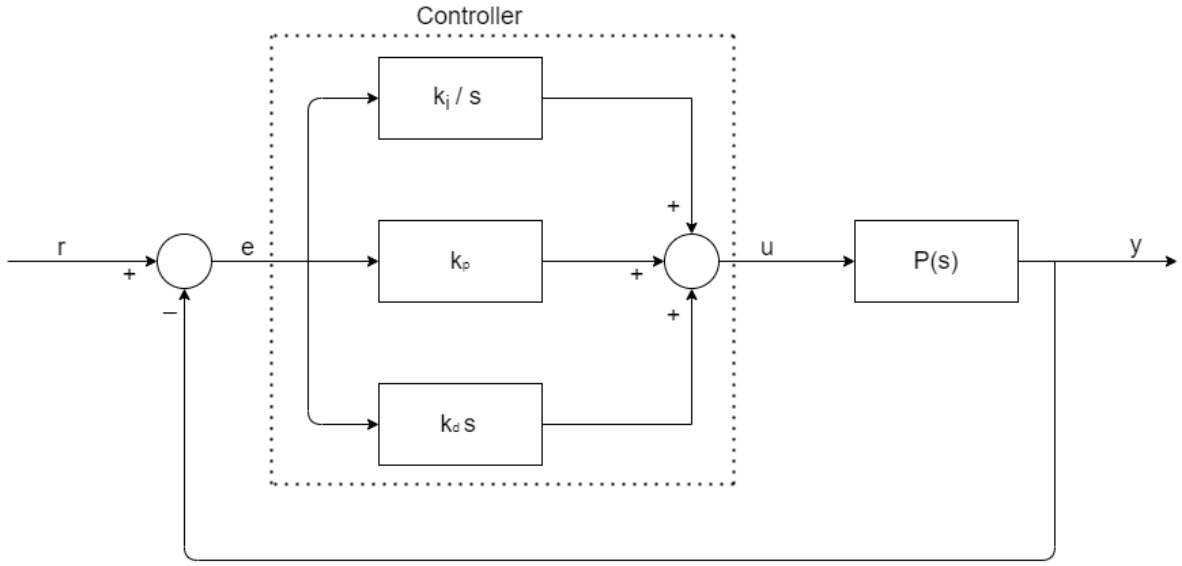

Figure 4. PID controller

2.5 Modeling of the Road profile

Three kinds of road profiles are considered to illustrate the effectiveness of the proposed suspension system.

2.5.1 Single bump

$$r(t) = \begin{cases} \frac{h}{2}\left(1 - \cos\left(\frac{2\pi V_0}{l} t\right)\right), & 0 \le t \le \frac{l}{V_0} \\ 0, & t > \frac{l}{V_0} \end{cases} \tag{8}$$

where, h = 0.05m is the height of the bump, l = 5m is the length of the bump respectively and V_O = 10m/s is the forward velocity of the vehicle.

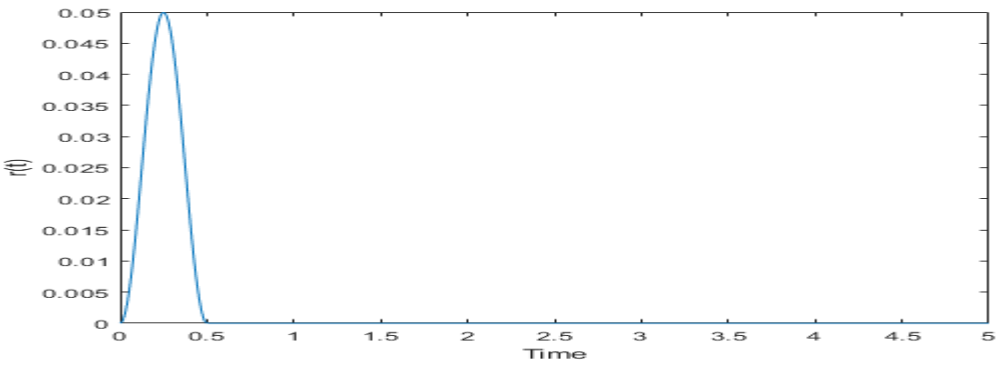

Figure 5. Single-bump road profile

2.5.2 Numerically generated random road profile

The profile is generated as a sum of series of harmonics as presented in equation below (Da Silva 2004; Dharankar et al. 2017):

$$r(x) = \sum_{n=1}^{N} Zn sin(2\pi\Omega n x + \varphi n)\,, n = 1,2,3 \ldots . N \qquad (9)$$

where,
N is the number of harmonic samples and also the number of frequency bands.
Ωn is the spatial frequency of nth harmonic. It is computed by linear interpolation as $\Omega n = \Omega min + \Delta\Omega$ (i-1), the frequency increment $\Delta\Omega$ being equal to $(\Omega max - \Omega min)$/N.
φn is a random phase angle uniformly distributed in the interval $[0,2\pi]$.
$Z_n = 2^a \frac{\Omega_0}{\Omega_n} \; (2\,\Delta\Omega)^{1/2} * 10^{-3}$ is the amplitude of the nth harmonic.

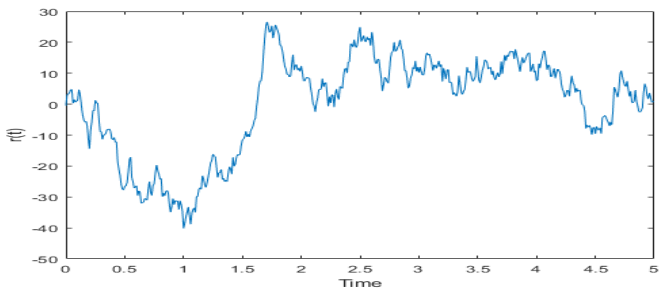

Figure 6. Numerically generated C class road profile

2.5.3 Superposition of sine waves of different frequencies

This road profile is generated as a sum of three different sine waves.

$$r(t) = 0.02 \sin 2\pi t + 0.01 \sin 10\pi t + 0.001 \sin 16\pi t \qquad (10)$$

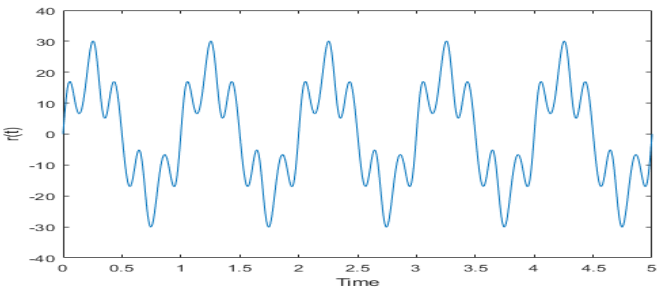

Figure 7. Road as superposition of sine waves

3. Simulation Results and Discussions

Kang et al. (2019) used a mid-size passenger vehicle (model ALL NEW K7 of KIA Motor Company) as test-bed vehicles. They used the sensor data for system identification. Thus obtained parameters of quarter car model are listed in the table 6. A quarter car with dynamics explained in section 2 was simulated on three different types of road profiles which are described in section 3.

M	232.7 kg
M_W	48.4 kg
k	28084 N/m
B	960.3 Ns/m
k_W	242000 N/m

Table 6. Quarter car model parameters

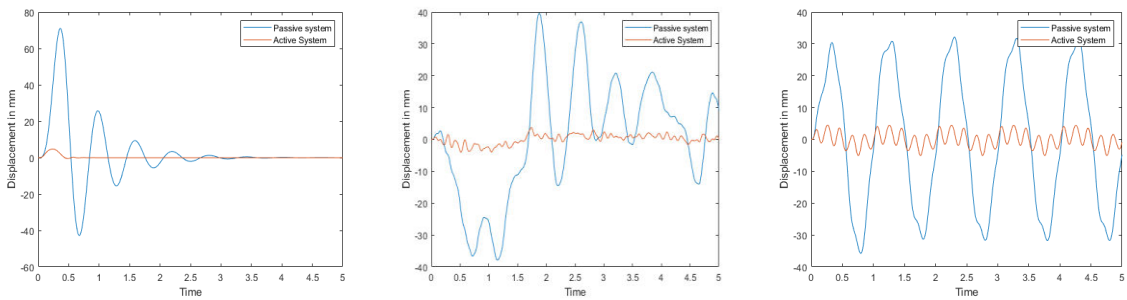

(a) Road type 3.1 (b) Road type 3.2 (c) Road type 3.2

Figure 8. Sprung mass deflection for three different road profiles (quarter car model)

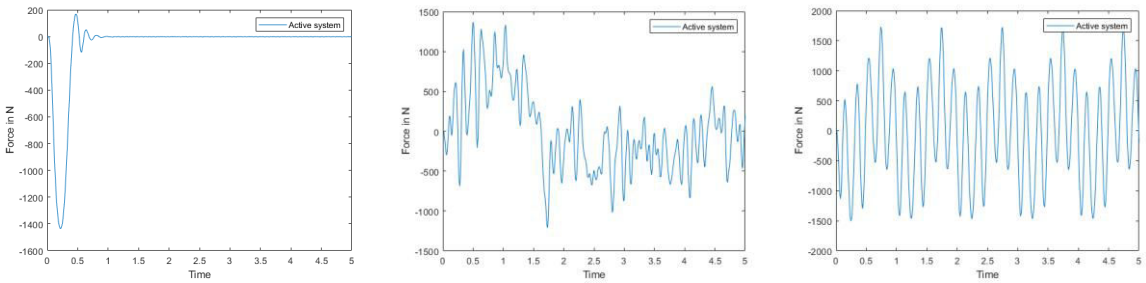

(a) Road type 3.1 (b) Road type 3.2 (c) Road type 3.2

Figure 9. Control force for three different road profiles (quarter car model)

The non-linear model accounts friction, non-linearity of the spring, contact dynamics due to materials and other non-linear properties. The controllers designed and the technique presented in this paper is validated with non linear model of double wishbone suspension system.

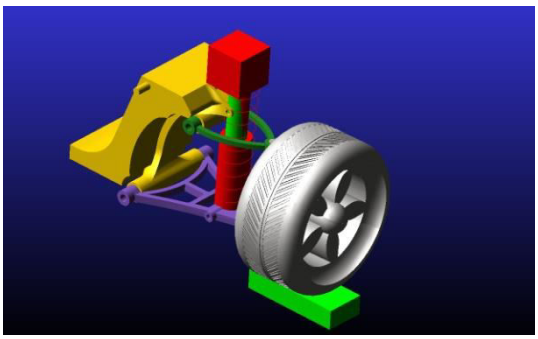

Figure 10. Double wishbone model designed in Adams

The non linear model was defined in Adams and co-simulated with Matlab/Simulink for examining the system with the proposed control method. The response of this model for the same road profile shows reduced sprung mass displacement and control force. This is due to the fact that the double-wishbone incorporates a hinged mechanism where the sprung mass lies at an offset distance from the wheel.

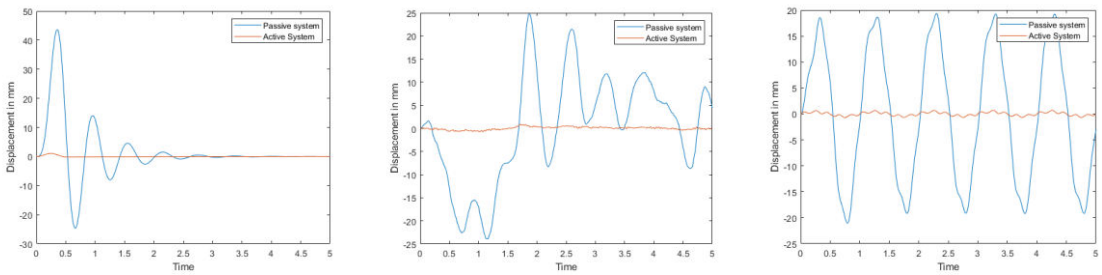

(a) Road type 3.1 (b) Road type 3.2 (c) Road type 3.2

Figure 11. Sprung mass deflection for three different road profiles (double wishbone model)

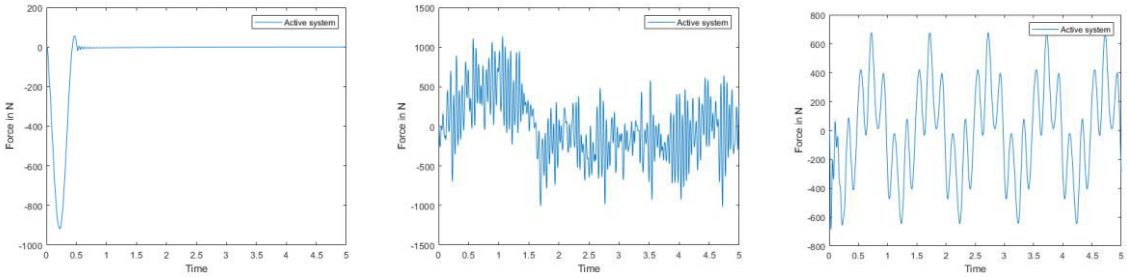

(a) Road type 3.1 (b) Road type 3.2 (c) Road type 3.2

Figure 12. Control force for three different road profiles (double wishbone model)

The sprung mass displacement of an active system is compared to a passive system in figure 8 and 11. From the bump response of the systems, it is clear that the active system brings a significant reduction in amplitude as well as the settling time. The hydraulic system discussed in section 2 provides the necessary force for this reduction. The forces exerted by the hydraulic system for different road profiles are presented in figure12.

It can be noted that the passive system seems to have higher response time than that of the active system. Due to this displacement curve of passive system in case of road (b) and (c) is smoother than that of active system. The jagged response curve of the active system is due to its faster response time. This sensitivity compels the system to account even trivial irregularities of the road. This can also be visualized with figures 12 and 9 where the nature of forces almost resembles the nature of road profile.

4. Conclusion

This paper has proposed a hydraulic actuator suspension system based on a PID controller to improve vehicle ride comfort. The suspension system was first designed for a quarter-car model and then implemented on a double-wishbone model designed on Adams. The systems were simulated for different models of road profiles. Throughout the research, the simulation results of the passive and the active suspension system are juxtaposed and the comparison between them indicates a significant improvement in the system response when active suspension system is used. Although the wishbone system imitates a real suspension system and accounts non-linearity of the system to a considerable extent, there are still few insufficiencies in the methodology introduced in this paper. The hydraulic system designed in this paper is almost ideal in many aspects. The forces in the system are assumed to have only translational effects in vertical direction and the rotational effects of these forces (moments) are not considered at all. However, these assumptions do not make a substantial change in the effectiveness of the system.

Acknowledgement
The authors wish to thank Associate Prof. Dr. Mahesh Chandra Luitel for insights and comments that greatly helped to improve the manuscript. Authors also extend sincere gratitude to Prof. Dr.-Ing. Thomas Schirle, Prof. Mathias Oberhauser and Er. Amit Pandit for their kind help and invaluable suggestions.

References

Astrom, K. Johan, and R. M. Murray. 2010. Feedback systems: an introduction for scientists and engineers. Princeton university press.

DaSilva, JGS. 2004. Dynamical performance of highway bridge decks with irregular pavement surface. Computers & structures 82.11-12: 871–881.

Dharankar, C. S., M. K. Hada, and S. Chandel. 2017. Numerical generation of road profile through spectral description for simulation of vehicle suspension. Journal of the Brazilian Society of Mechanical Sciences and Engineering 39.6: 1957–1967.

Dishant, E., P. Singh, and M. Sharma. 2017. Suspension systems: A review. International Research Journal of Engineering and Technology 4.4: 148–160.

Jager, A.G. de. 1990. Design of controllers for active suspension systems. Integration of Theory and Applications in Applied Mechanics. Springer: 193–215.

Kang, S.W., J.S. Kim, and G.W. Kim. 2019. Road roughness estimation based on discrete Kalman filter with unknown input. Vehicle System Dynamics 57.10: 1530–1544.

Locateli, C. C., P. L. Teixeira, E. R. De Pieri, P. Krus, & V. J. De Negri. 2014. Digital hydraulic system using pumps and on/off valves controlling the actuator. Fluid Power Systems Technology. American Society of Mechanical Engineers. 45820: V001T01A009.

Lozia, Z., and P. Zdanowicz. 2016. Optimization of damping in the passive automotive suspension system with using two quarter-car models. Scientific Conference on Automotive Vehicles and Combustion Engines (KONMOT 2016). 148.1.

Rudnick, L. R. 2020. Synthetics, mineral oils, and bio-based lubricants: chemistry and technology. CRC press.

Rydberg, K. 2013. Hydraulic fluid properties and their impact on energy efficiency. Pages 447–453 in 13th Scandinavian International Conference on Fluid Power, June 3-5, 2013, Linkoping, Sweden. Linkoping University Electronic Press.

Stone, R., and J. K. Ball. 2004. Automotive engineering fundamentals SAE International. SAE Permissions.

Xue, X. D., K. W. E. Cheng, Z. Zhang, J. K. Lin, D. H. Wang, Y. J. Bao, M. K. Wong, and N. Cheung. 2011. Study of art of automotive active suspensions. Pages 1–7 in 4th International Conference on Power Electronics Systems and Applications. IEEE.