project2 / PLC_1 [CPU 1215C DC/DC/DC] / Program blocks

Main [OB1]

Main Properties					
General					
Name	Main	**Number**	1	**Type**	OB
Language	LAD	**Numbering**	Automatic		
Information					
Title	"Main Program Sweep (Cycle)"	**Author**		**Comment**	LOGIC GATES(AND,NOT,NAND, NOR,XOR,XNOR,OR)
Family		**Version**	0.1	**User-defined ID**	

Main			
Name	**Data type**	**Default value**	**Comment**
Input			
Initial_Call	Bool		Initial call of this OB
Remanence	Bool		=True, if remanent data are available
Temp			
Constant			

Network 1:

AND GATE

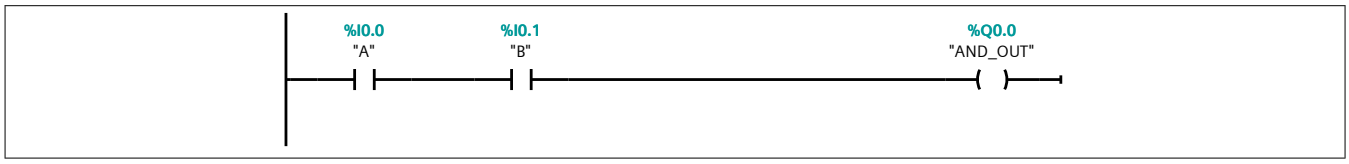

Network 2:

NOT GATE

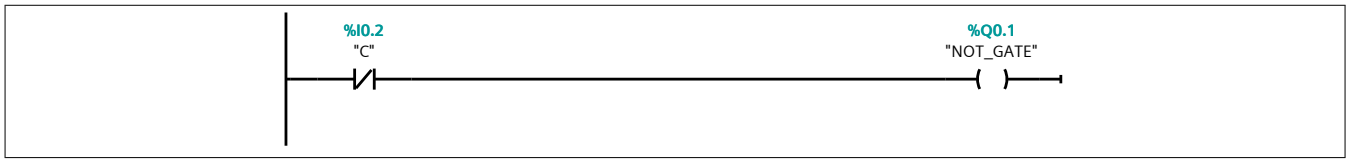

Network 3:

NOR GATE

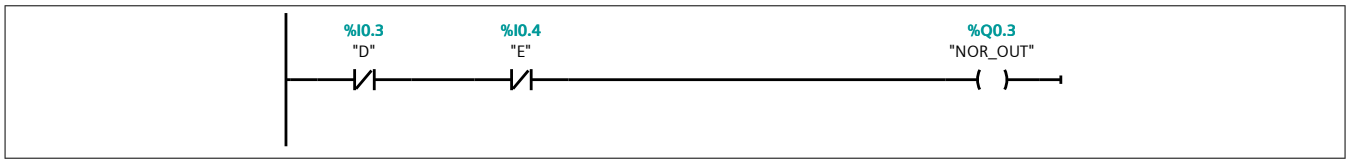

Network 4: OR_OUTPUT

OR GATE

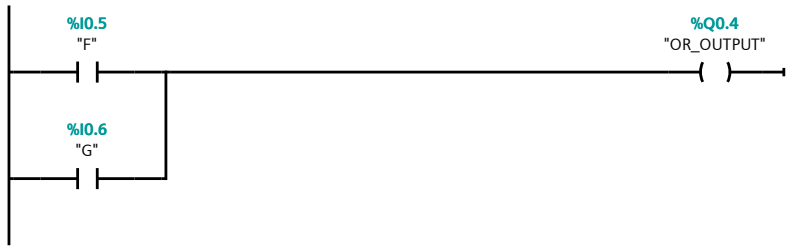

Network 5:

NAND GATE

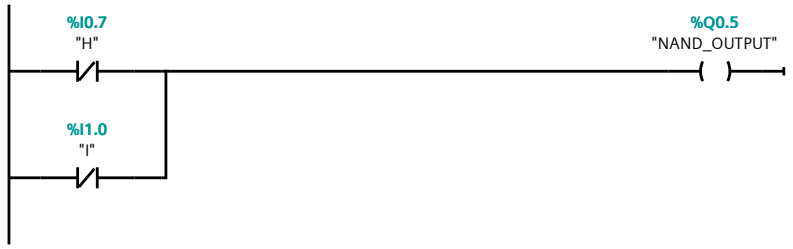

Network 6:

XOR GATE

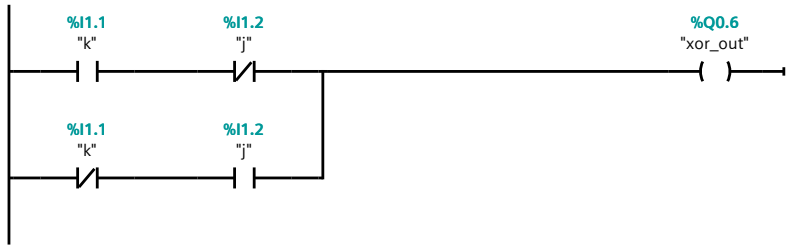

Network 7:

XNOR GATE

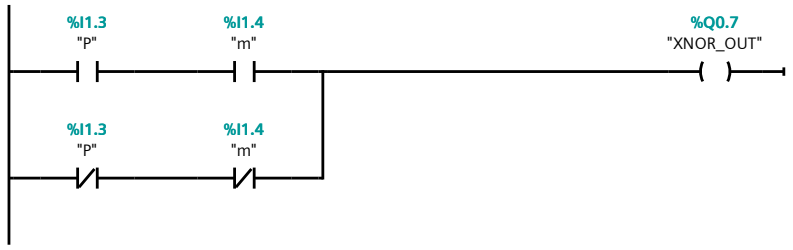

4IN4OUT / PLC_1 [CPU 1215C DC/DC/DC] / Program blocks

Main [OB1]

Main Properties					
General					
Name	Main	**Number**	1	**Type**	OB
Language	LAD	**Numbering**	Automatic		
Information					
Title	"Main Program Sweep (Cycle)"	**Author**		**Comment**	4 INPUT 4 OUTPUT
Family		**Version**	0.1	**User-defined ID**	

Main			
Name	**Data type**	**Default value**	**Comment**
Input			
Initial_Call	Bool		Initial call of this OB
Remanence	Bool		=True, if remanent data are available
Temp			
Constant			

Network 1:

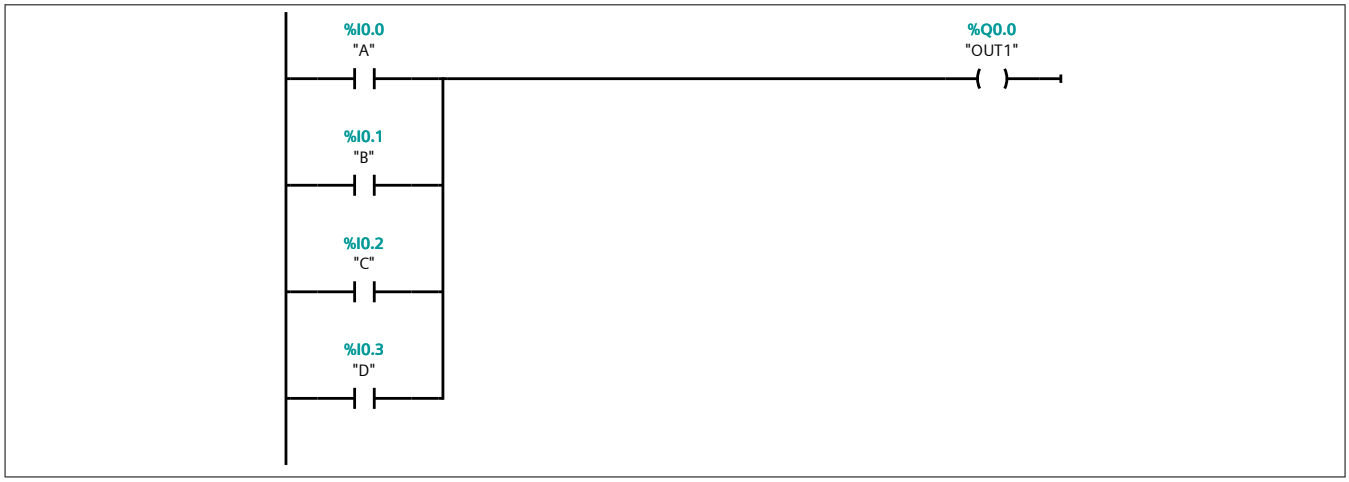

Network 2:

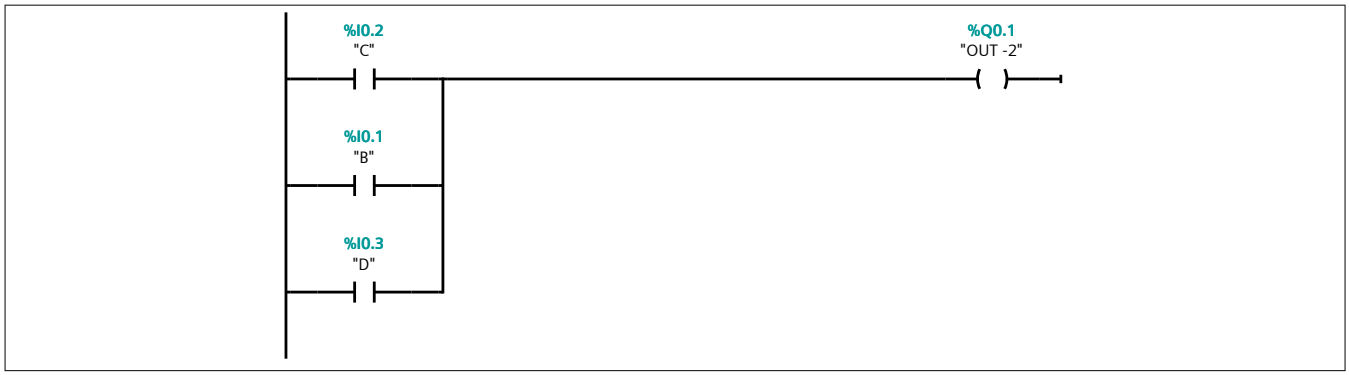

Network 3:

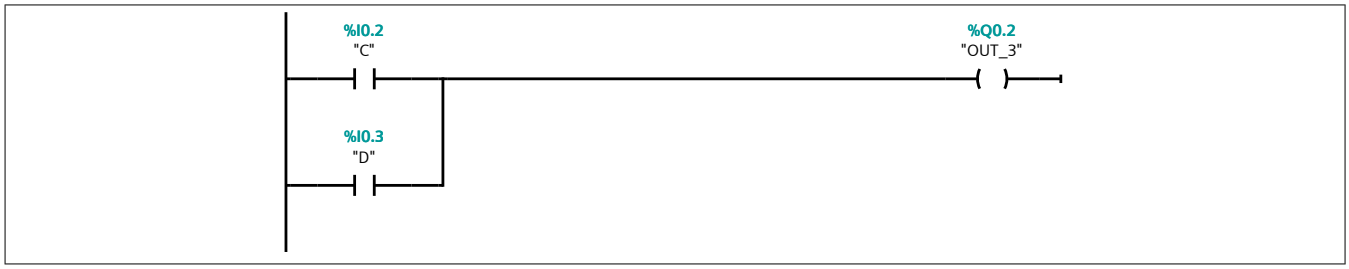

Network 4:

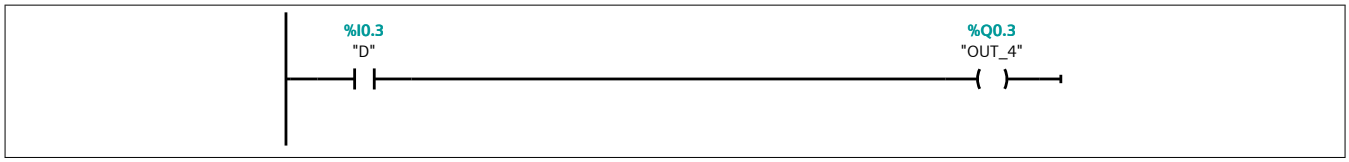

INOUT_OFF / PLC_1 [CPU 1215C DC/DC/DC] / Program blocks

Main [OB1]

Main Properties					
General					
Name	Main	**Number**	1	**Type**	OB
Language	LAD	**Numbering**	Automatic		
Information					
Title	"Main Program Sweep (Cycle)"	**Author**		**Comment**	INPUT OUTPUT WITH OFF CONDITION
Family		**Version**	0.1	**User-defined ID**	

Main			
Name	**Data type**	**Default value**	**Comment**
Input			
Initial_Call	Bool		Initial call of this OB
Remanence	Bool		=True, if remanent data are available
Temp			
Constant			

Network 1:

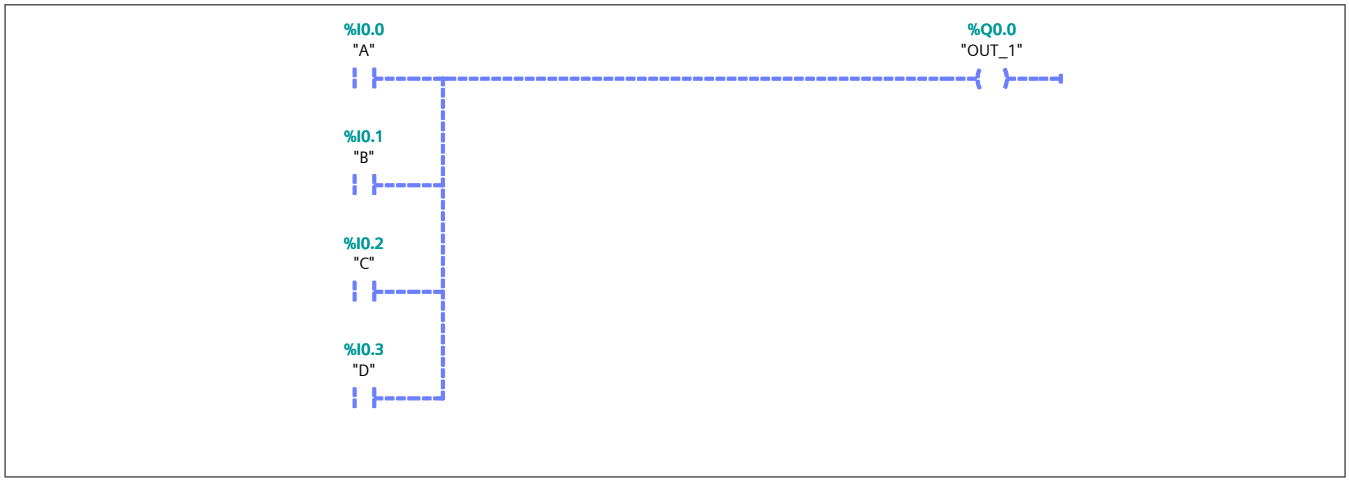

Network 2:

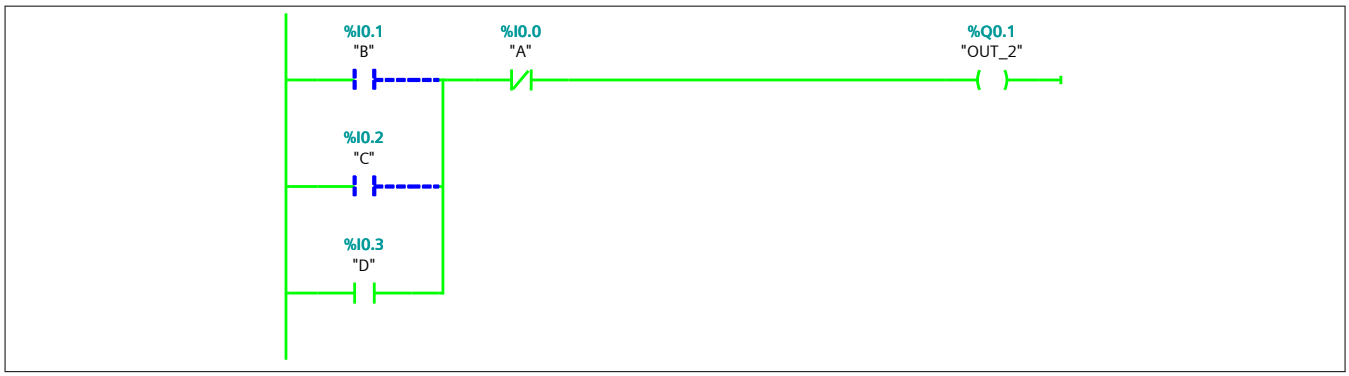

Network 3:

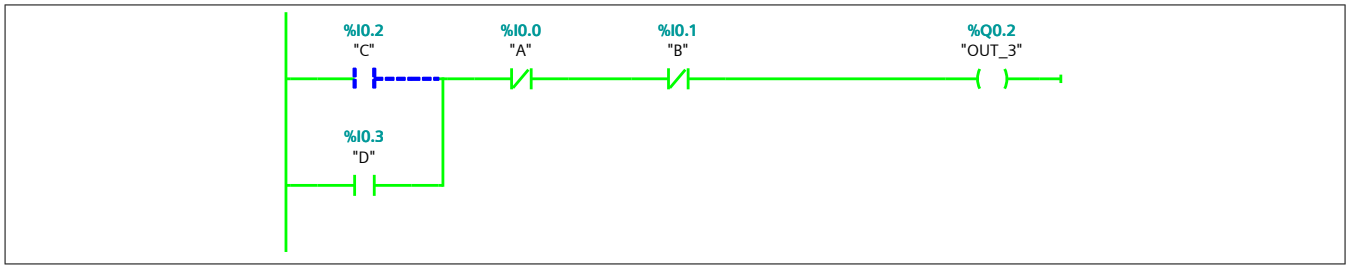

Network 4:

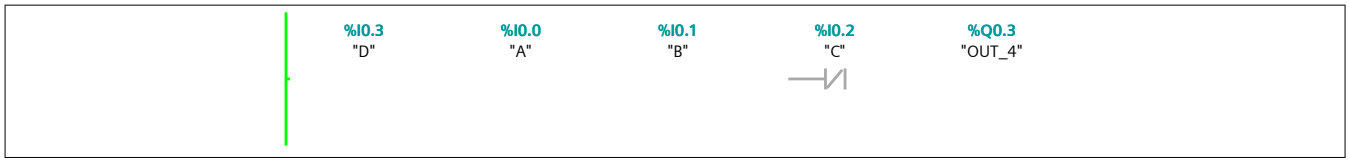

4IN4OUT / PLC_1 [CPU 1215C DC/DC/DC] / Program blocks

Main [OB1]

Main Properties					
General					
Name	Main	**Number**	1	**Type**	OB
Language	LAD	**Numbering**	Automatic		
Information					
Title	"Main Program Sweep (Cycle)"	**Author**		**Comment**	4 INPUT 4 OUTPUT
Family		**Version**	0.1	**User-defined ID**	

Main			
Name	**Data type**	**Default value**	**Comment**
Input			
Initial_Call	Bool		Initial call of this OB
Remanence	Bool		=True, if remanent data are available
Temp			
Constant			

Network 1:

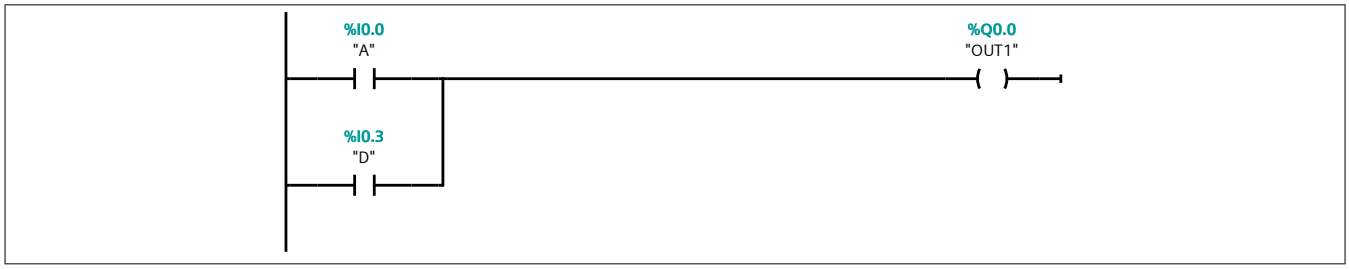

Network 2:

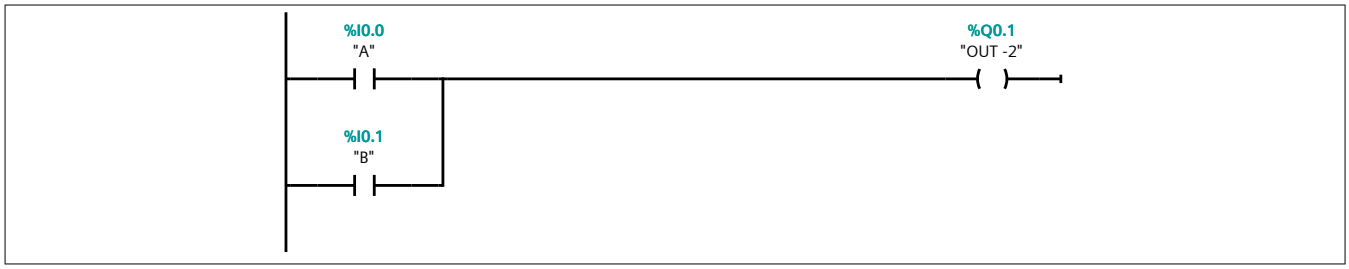

Network 3:

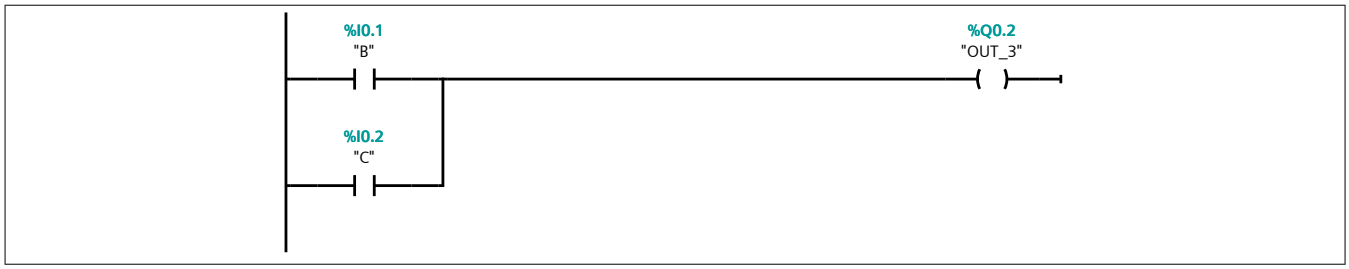

Network 4:

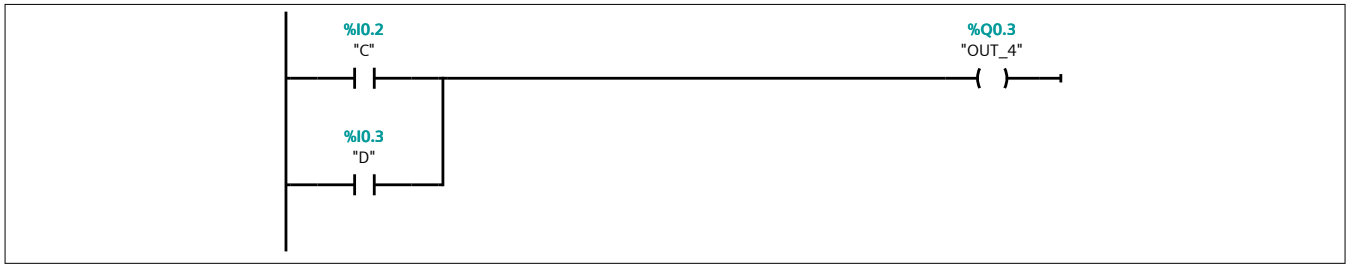

4IN4OUT / PLC_1 [CPU 1215C DC/DC/DC] / Program blocks

Main [OB1]

Main Properties					
General					
Name	Main	**Number**	1	**Type**	OB
Language	LAD	**Numbering**	Automatic		
Information					
Title	"Main Program Sweep (Cycle)"	**Author**		**Comment**	4 INPUT 4 OUTPUT
Family		**Version**	0.1	**User-defined ID**	

Main			
Name	**Data type**	**Default value**	**Comment**
Input			
Initial_Call	Bool		Initial call of this OB
Remanence	Bool		=True, if remanent data are available
Temp			
Constant			

Network 1:

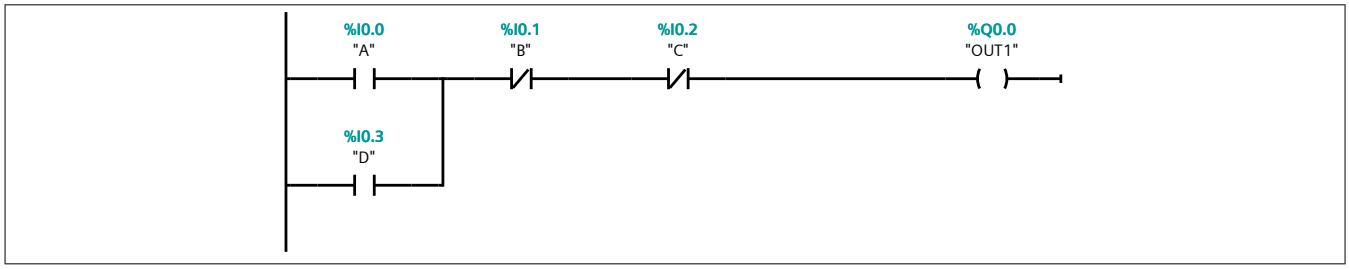

Network 2:

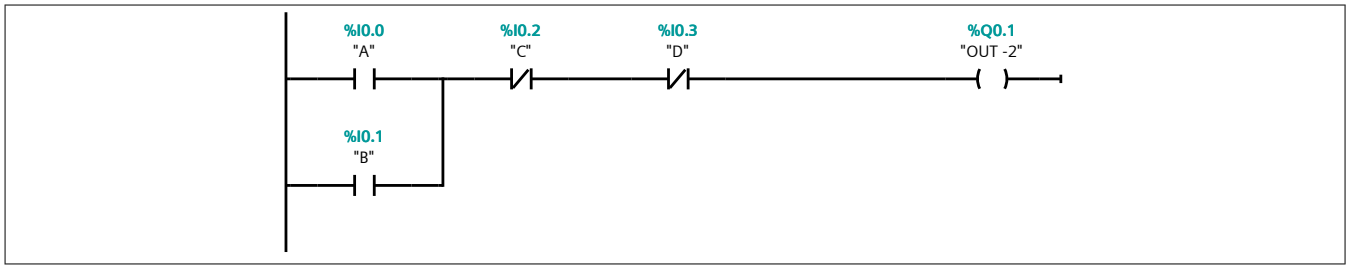

Network 3:

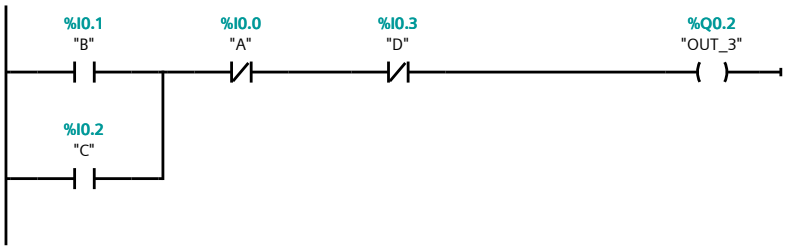

Network 4:

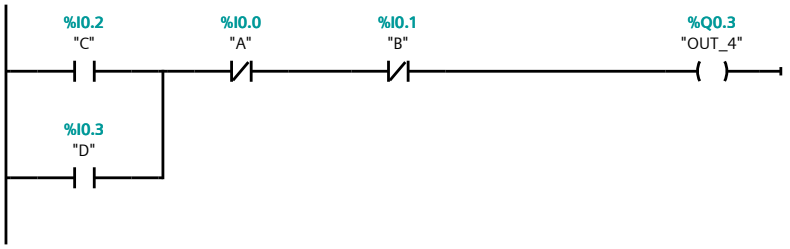

date_5_june / PLC_1 [CPU 1215C DC/DC/DC] / Program blocks

Main [OB1]

Main Properties					
General					
Name	Main	**Number**	1	**Type**	OB
Language	LAD	**Numbering**	Automatic		
Information					
Title	"Main Program Sweep (Cycle)"	**Author**		**Comment**	Write a ladder logic diagram, there are 3 inputs switches S1, S2,S3 and 3 output's L1, L2, L3.
Family		**Version**	0.1	**User-defined ID**	

Main			
Name	**Data type**	**Default value**	**Comment**
Input			
Initial_Call	Bool		Initial call of this OB
Remanence	Bool		=True, if remanent data are available
Temp			
Constant			

Network 1:

i) When S1 is pressed L1 turns ON

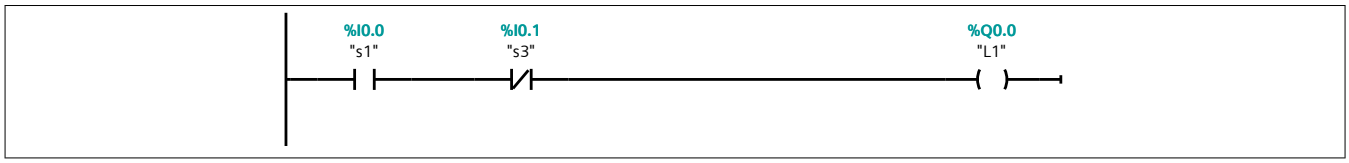

Network 2:

ii) When S2 is pressed L2 turns ON

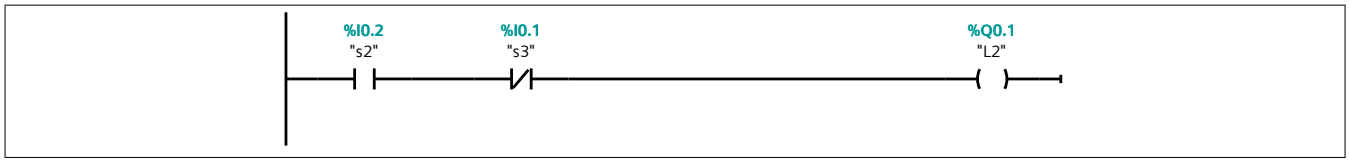

Network 3:

iii) When S3 is pressed L3 turns ON and L1 and L2 turns OFF

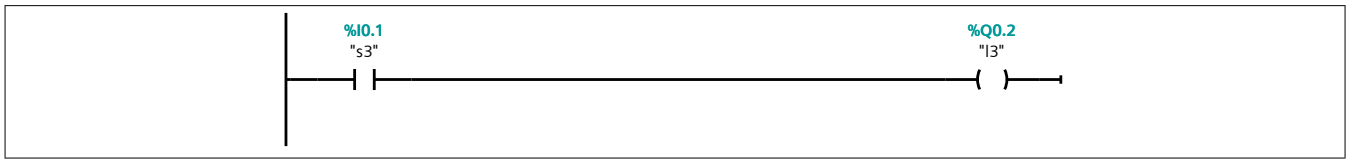

date_5_june / PLC_1 [CPU 1215C DC/DC/DC] / Program blocks

Main [OB1]

Main Properties					
General					
Name	Main	**Number**	1	**Type**	OB
Language	LAD	**Numbering**	Automatic		
Information					
Title	"Main Program Sweep (Cycle)"	**Author**		**Comment**	There are 2 input switches S1 and S2
Family		**Version**	0.1	**User-defined ID**	

Main			
Name	**Data type**	**Default value**	**Comment**
Input			
Initial_Call	Bool		Initial call of this OB
Remanence	Bool		=True, if remanent data are available
Temp			
Constant			

Network 1:

i) Without pressing S1 motor must turn ON

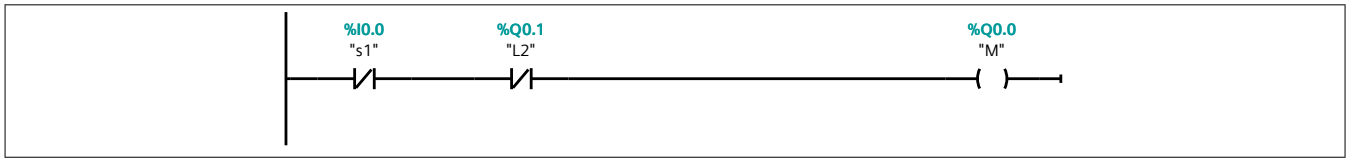

Network 2:

ii) While pressing S2 lamp must turn ON and motor turns OFF

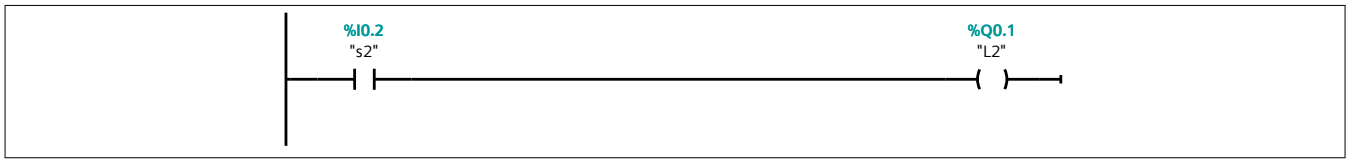

Network 3:

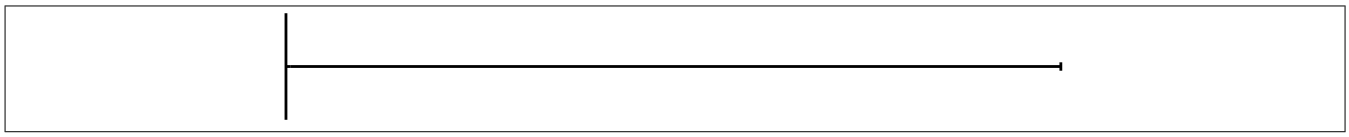

date_5_june / PLC_1 [CPU 1215C DC/DC/DC] / Program blocks

Main [OB1]

Main Properties					
General					
Name	Main	**Number**	1	**Type**	OB
Language	LAD	**Numbering**	Automatic		
Information					
Title	"Main Program Sweep (Cycle)"	**Author**		**Comment**	There are 2 input switches S1 and S2
Family		**Version**	0.1	**User-defined ID**	

Main			
Name	**Data type**	**Default value**	**Comment**
Input			
Initial_Call	Bool		Initial call of this OB
Remanence	Bool		=True, if remanent data are available
Temp			
Constant			

Network 1:

i) Without pressing S1 motor must turn ON

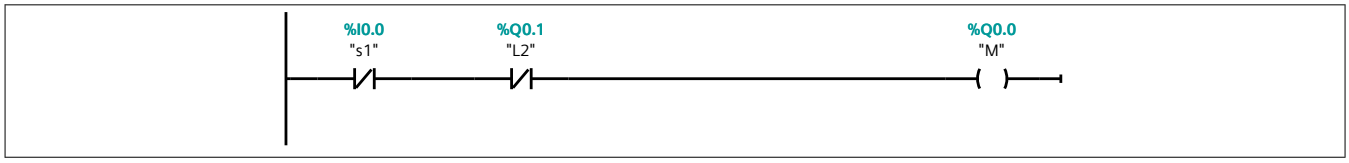

Network 2:

LATCHING

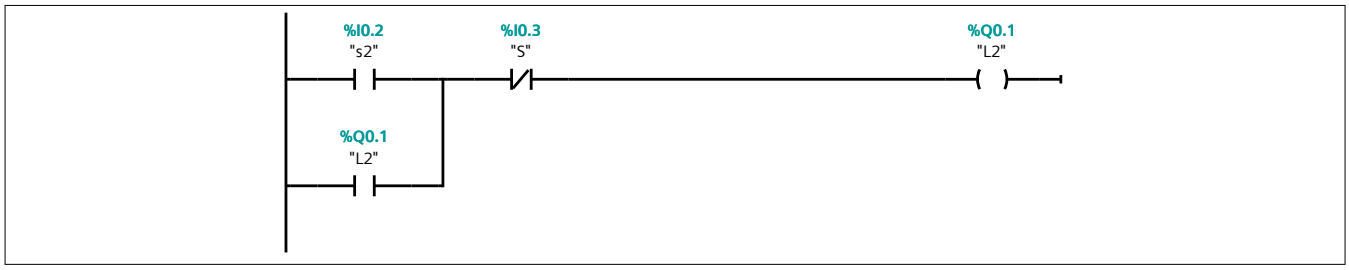

Network 3:

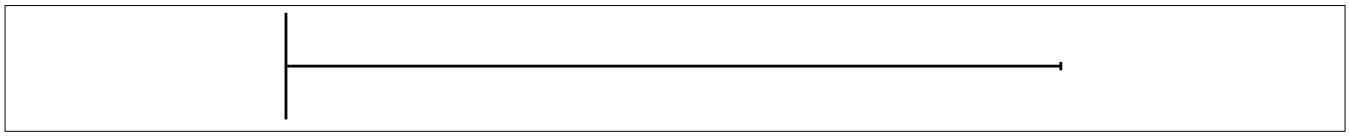

JUNE_5(1) / PLC_1 [CPU 1215C DC/DC/DC] / Program blocks

Main [OB1]

Main Properties					
General					
Name	Main	**Number**	1	**Type**	OB
Language	LAD	**Numbering**	Automatic		
Information					
Title	"Main Program Sweep (Cycle)"	**Author**		**Comment**	There are 3 inputs S1,S2,S3 and 3 outputs L1,L2,L3 i)while pressing any one switch L1must turn ON. ii)While pressing any 2 switch L2 must turn ON and L1,L3 must turn OFF. iii)While pressing all the three switches L3 must turn ON and L1,L2 must turn OFF
Family		**Version**	0.1	**User-defined ID**	

Main			
Name	**Data type**	**Default value**	**Comment**
Input			
Initial_Call	Bool		Initial call of this OB
Remanence	Bool		=True, if remanent data are available
Temp			
Constant			

Network 1:

i

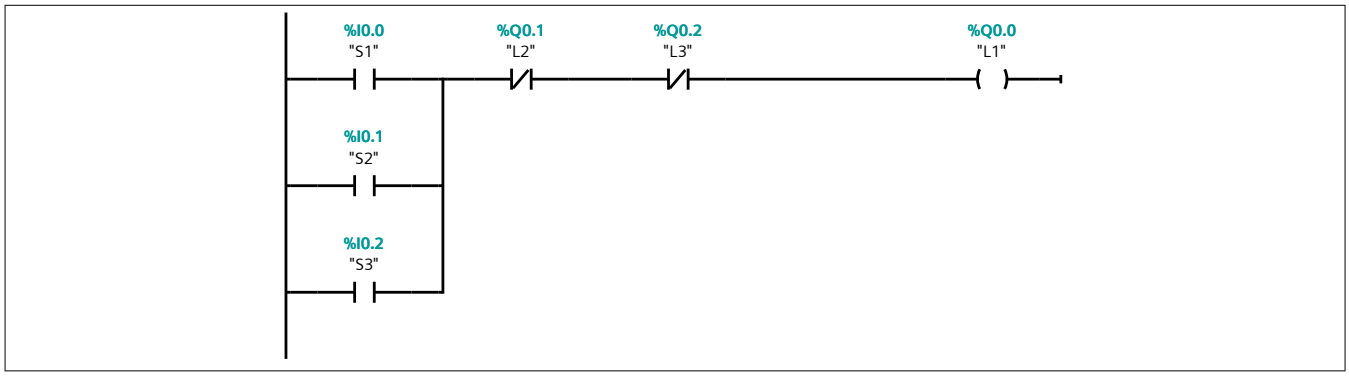

Network 2:

ii

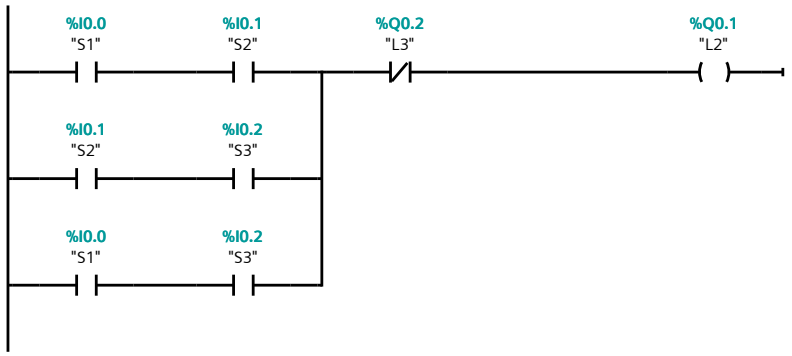

Network 3:

iii

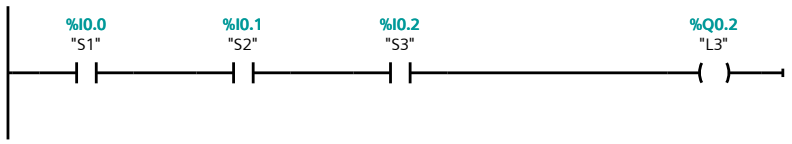

3fans,comtactor / PLC_1 [CPU 1215C DC/DC/DC] / Program blocks

Main [OB1]

Main Properties					
General					
Name	Main	**Number**	1	**Type**	OB
Language	LAD	**Numbering**	Automatic		
Information					
Title	"Main Program Sweep (Cycle)"	**Author**		**Comment**	There are 3 fans F1, F2 and a standby fan F3 with a m,ain contactor. Start and Stop switch is used to turn ON main contactor 2 fans F1 F2 will start only after main contactor is started. If any 1 fan fails F1 or F2 then standby fan F3 goes ON. If any 2 fans from F1, F2 and F3 fails then main contactor must stop and lamp must flash at 5 HZ frequency.
Family		**Version**	0.1	**User-defined ID**	

Main			
Name	**Data type**	**Default value**	**Comment**
Input			
Initial_Call	Bool		Initial call of this OB
Remanence	Bool		=True, if remanent data are available
Temp			
Constant			

Network 1:

Starting the contactor using Start and Stop switch and turning contactor OFF if any 2 fans fails

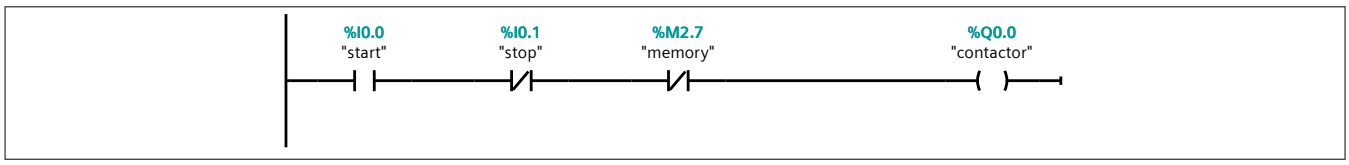

Network 2:

If contactor is ON Start fan1

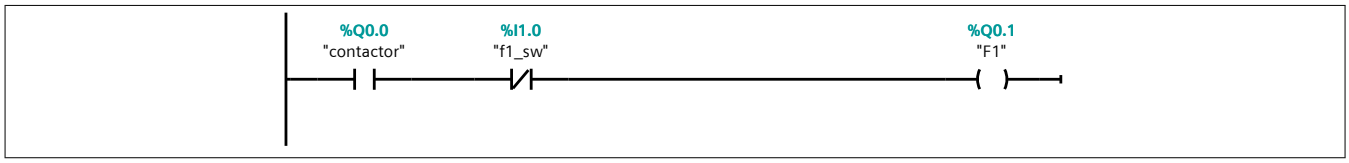

Network 3:

If contactor is ON Start fan2

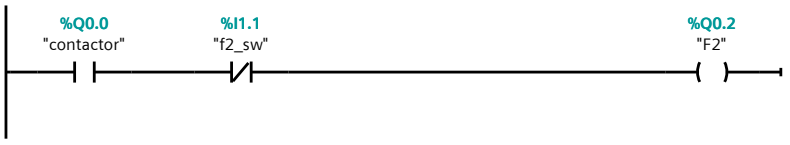

Network 4:

Any 1 or F1 and F2 fails F3 turns ON

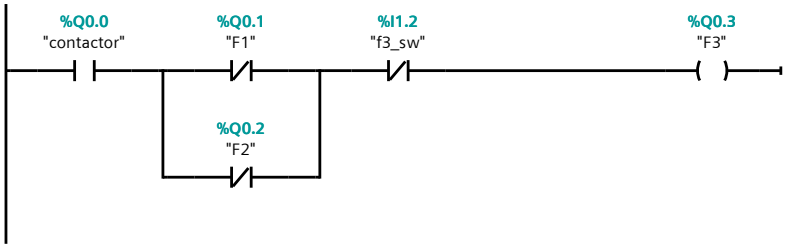

Network 5:

Any 2 fans from F1, F2 and F3 fails, the output is stored in memory

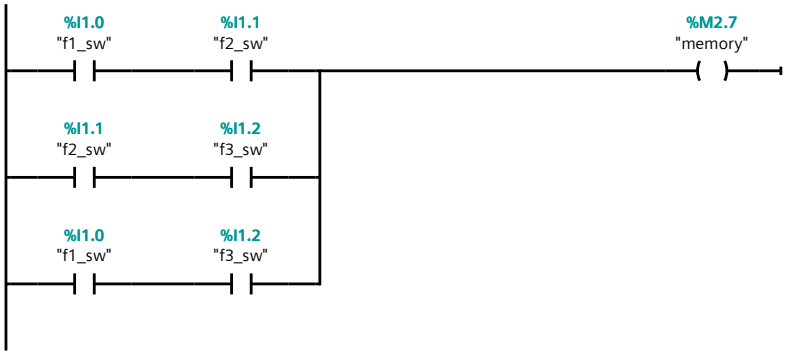

Network 6:

Based on memory the lamp flahes at 5 Hz

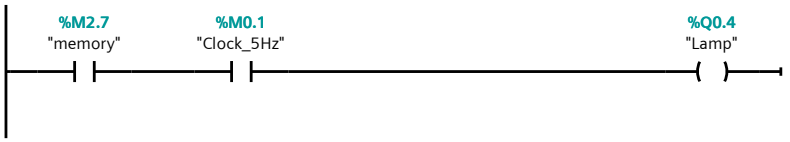

6june_timers / PLC_1 [CPU 1215C DC/DC/DC] / Program blocks

Main [OB1]

Main Properties					
General					
Name	Main	**Number**	1	**Type**	OB
Language	LAD	**Numbering**	Automatic		
Information					
Title	"Main Program Sweep (Cycle)"	**Author**		**Comment**	TIMERS
Family		**Version**	0.1	**User-defined ID**	

Main			
Name	**Data type**	**Default value**	**Comment**
Input			
Initial_Call	Bool		Initial call of this OB
Remanence	Bool		=True, if remanent data are available
Temp			
Constant			

Network 1:

1) Time Pluse (TP)

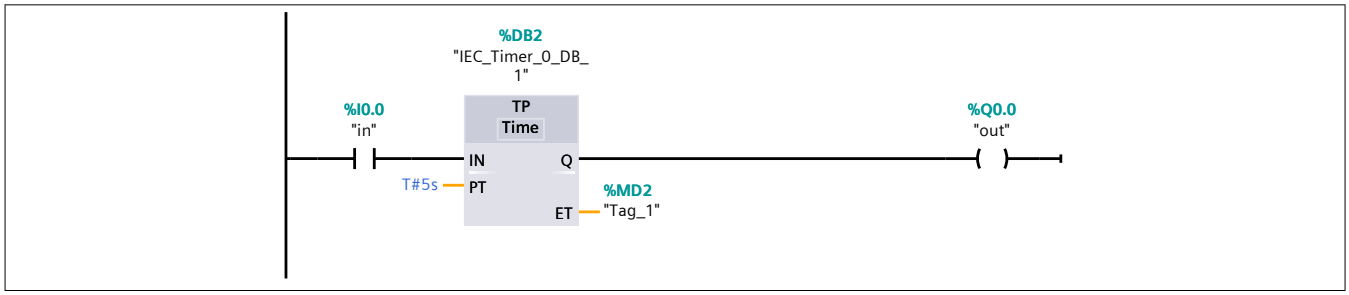

Network 2:

2) ON Delay Time (TON)

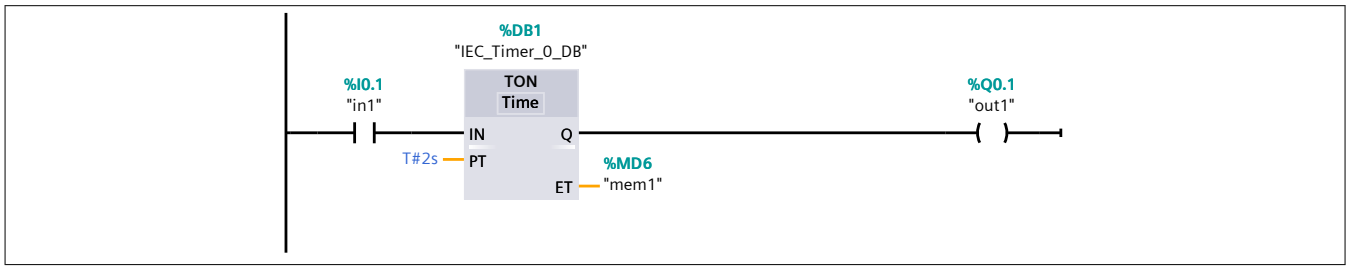

Network 3:

3) OFF Delay Time (TOF)

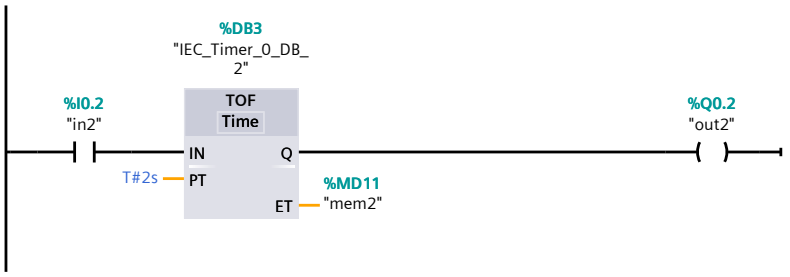

Network 4:

4) ON Delay Time with Reset (TONR)

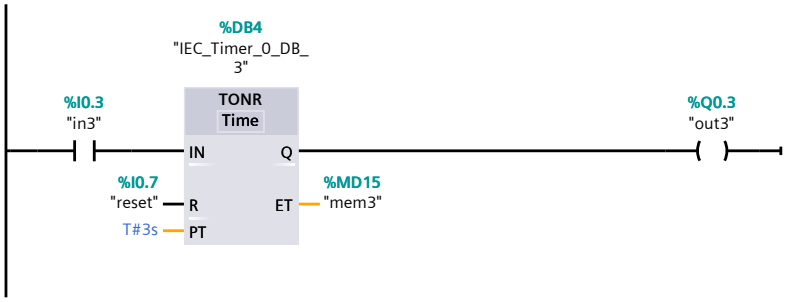

6june_timers / PLC_1 [CPU 1215C DC/DC/DC] / Program blocks

Main [OB1]

Main Properties					
General					
Name	Main	**Number**	1	**Type**	OB
Language	LAD	**Numbering**	Automatic		
Information					
Title	"Main Program Sweep (Cycle)"	**Author**		**Comment**	An oil pum should start after pressing stat push button. The main motor will start automatically after 15s. After pressing stop push button, main motor will stop and oil pump will stop after 15s
Family		**Version**	0.1	**User-defined ID**	

Main			
Name	**Data type**	**Default value**	**Comment**
Input			
Initial_Call	Bool		Initial call of this OB
Remanence	Bool		=True, if remanent data are available
Temp			
Constant			

Network 1:

Storing the start and stop condition in memory

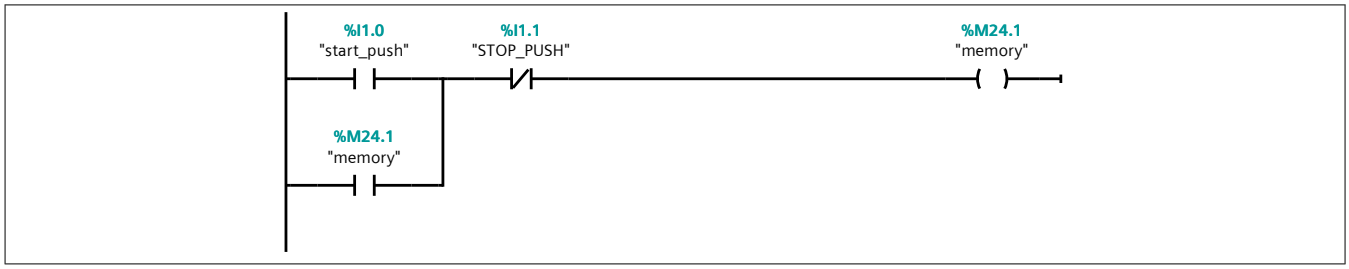

Network 2:

Based on memory, motor and oil pump is turned on and off according to the mentioned condition

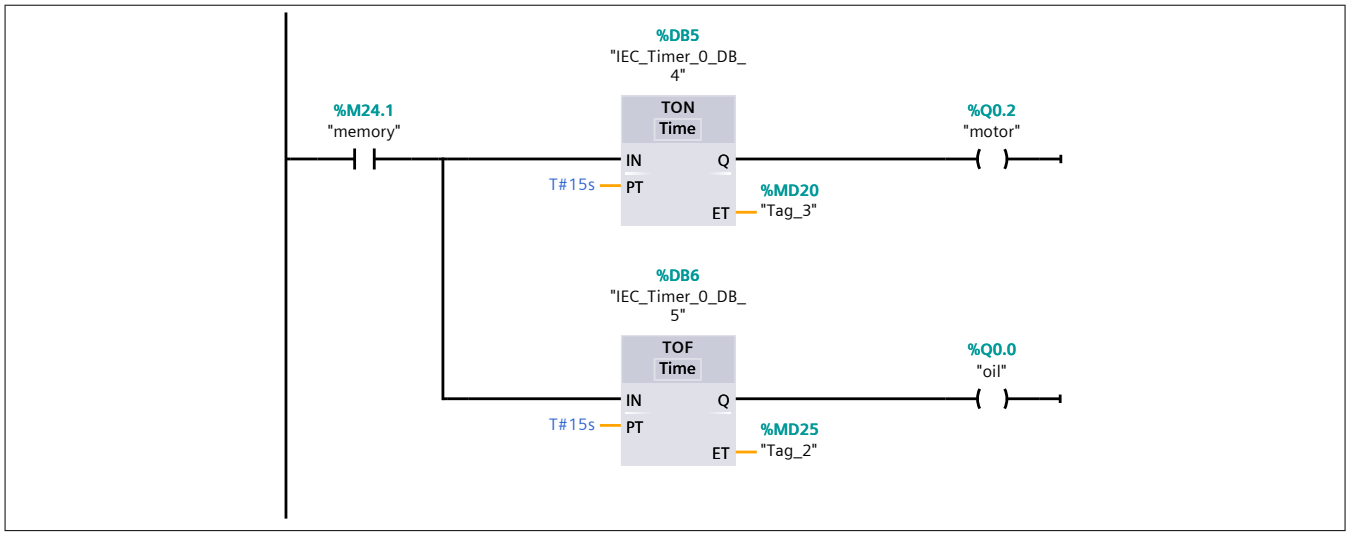

Network 3:

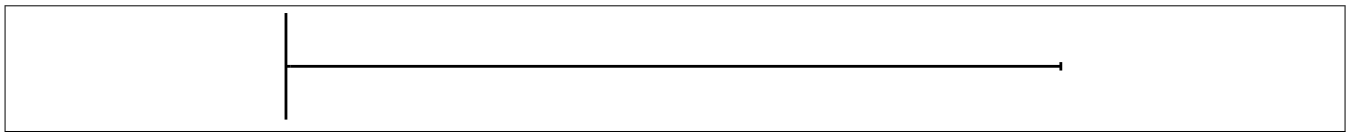

Network 4:

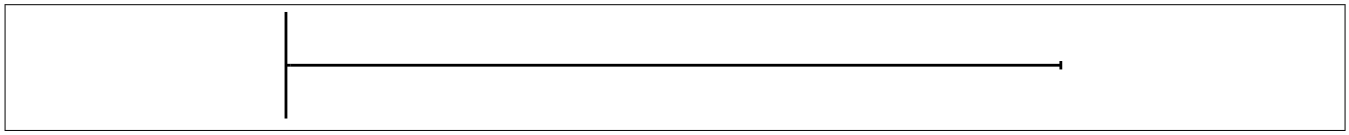

Project_june_9 / PLC_1 [CPU 1215C DC/DC/DC] / Program blocks

Main [OB1]

Main Properties					
General					
Name	Main	**Number**	1	**Type**	OB
Language	LAD	**Numbering**	Automatic		
Information					
Title	"Main Program Sweep (Cycle)"	**Author**		**Comment**	Design a program when input A is turned ON, light should be ON for 10 seconds later it will be OFF for 2 seconds and again continuously ON until a stop button is pressed.
Family		**Version**	0.1	**User-defined ID**	

Main			
Name	**Data type**	**Default value**	**Comment**
Input			
Initial_Call	Bool		Initial call of this OB
Remanence	Bool		=True, if remanent data are available
Temp			
Constant			

Network 1:

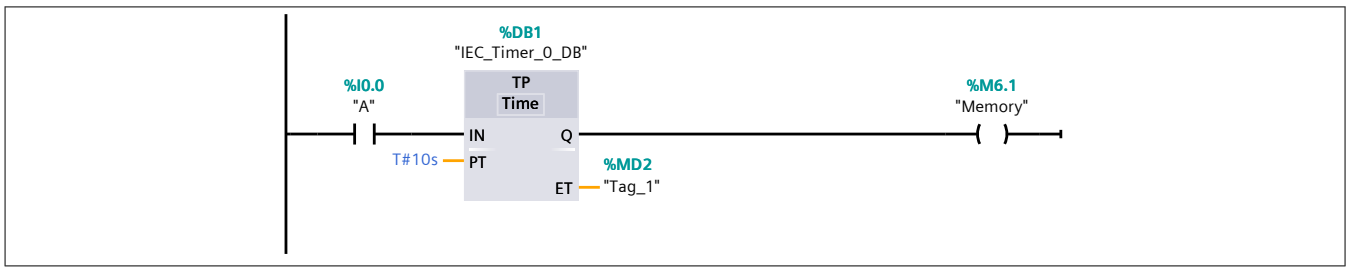

Network 2:

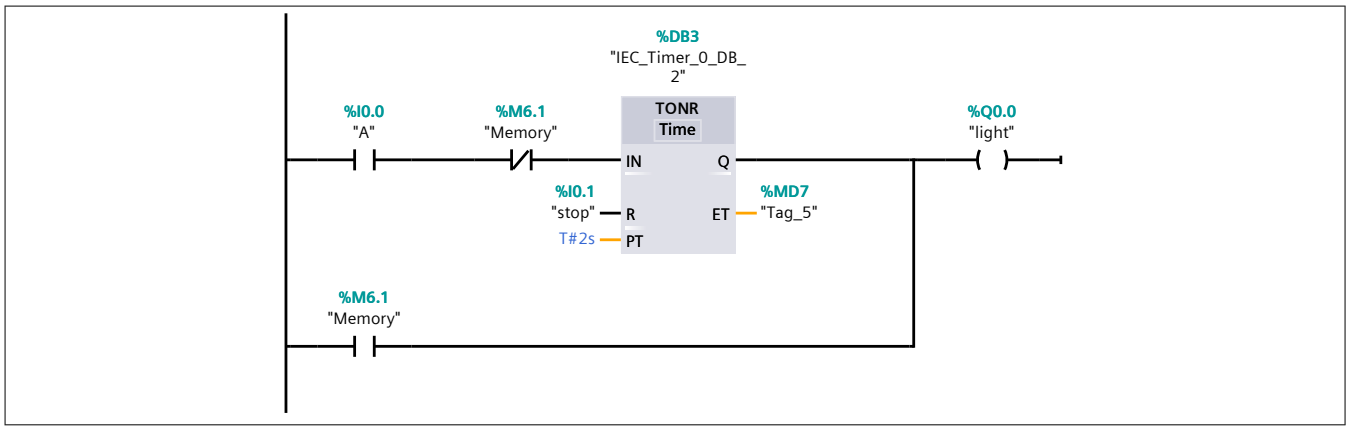

Project_june_9 / PLC_1 [CPU 1215C DC/DC/DC] / Program blocks

Main [OB1]

Main Properties					
General					
Name	Main	**Number**	1	**Type**	OB
Language	LAD	**Numbering**	Automatic		
Information					
Title	"Main Program Sweep (Cycle)"	**Author**		**Comment**	There are TWO lights which must glow for 10 seconds alternatively.
Family		**Version**	0.1	**User-defined ID**	

Main			
Name	**Data type**	**Default value**	**Comment**
Input			
Initial_Call	Bool		Initial call of this OB
Remanence	Bool		=True, if remanent data are available
Temp			
Constant			

Network 1:

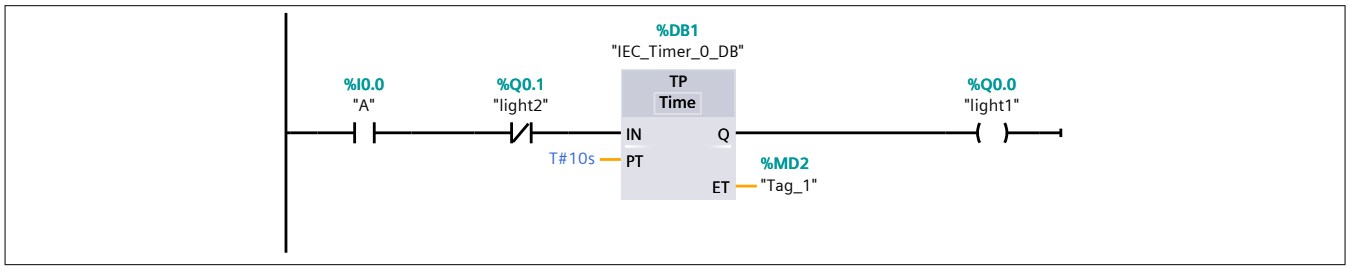

Network 2:

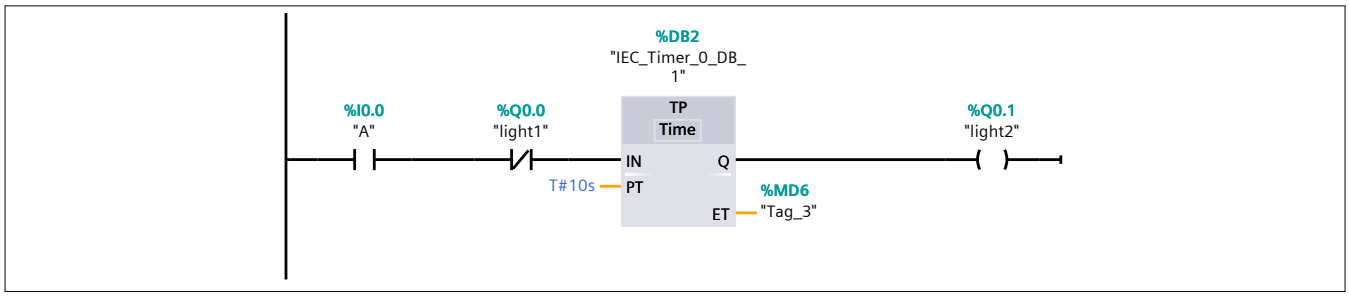

Project_june_9 / PLC_1 [CPU 1215C DC/DC/DC] / Program blocks

Main [OB1]

Main Properties					
General					
Name	Main	**Number**	1	**Type**	OB
Language	LAD	**Numbering**	Automatic		
Information					
Title	"Main Program Sweep (Cycle)"	**Author**		**Comment**	In a food process plant, when start switch is pressed motor1 turns ON for 5s and motor2 for 10s. After motor2 turns OFF motor3 must turn ON after 5s and mo-tor4 after 10s ,then there must be 2s of delay and process must repeat until stop switch is pressed.
Family		**Version**	0.1	**User-defined ID**	

Main			
Name	**Data type**	**Default value**	**Comment**
Input			
Initial_Call	Bool		Initial call of this OB
Remanence	Bool		=True, if remanent data are available
Temp			
Constant			

Network 1:

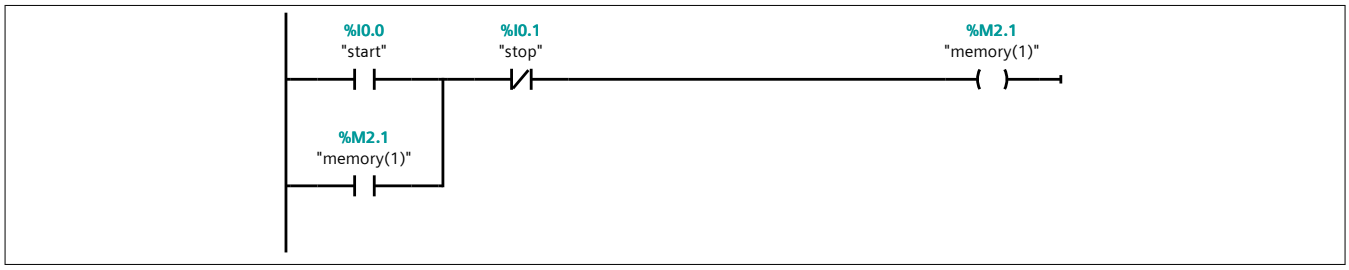

Network 2:

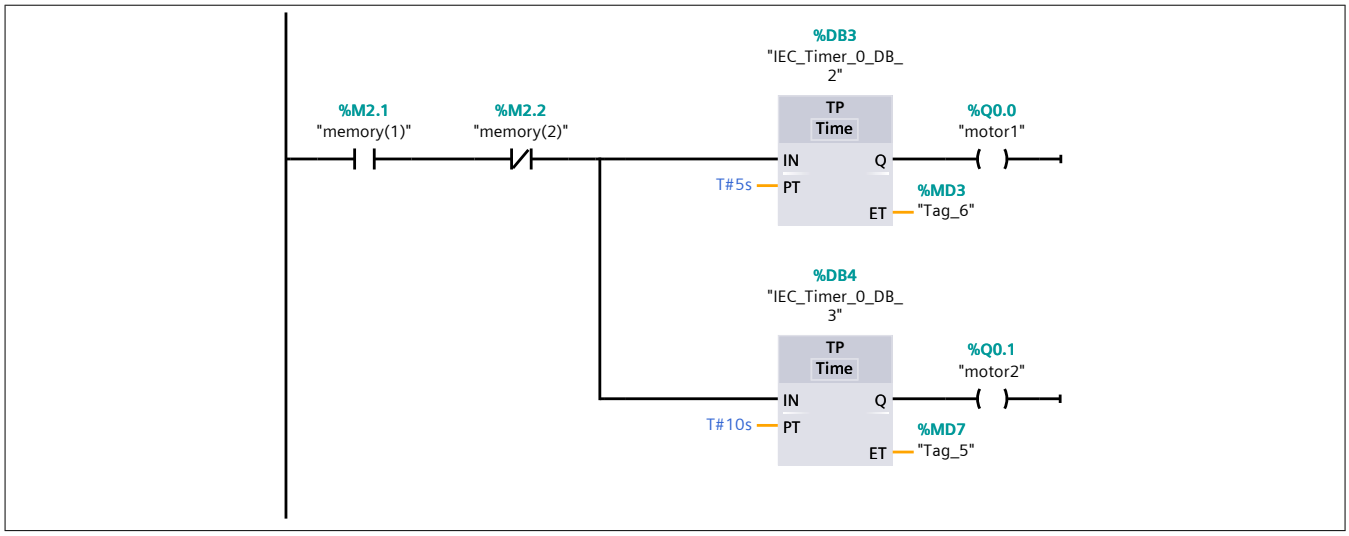

Network 3:

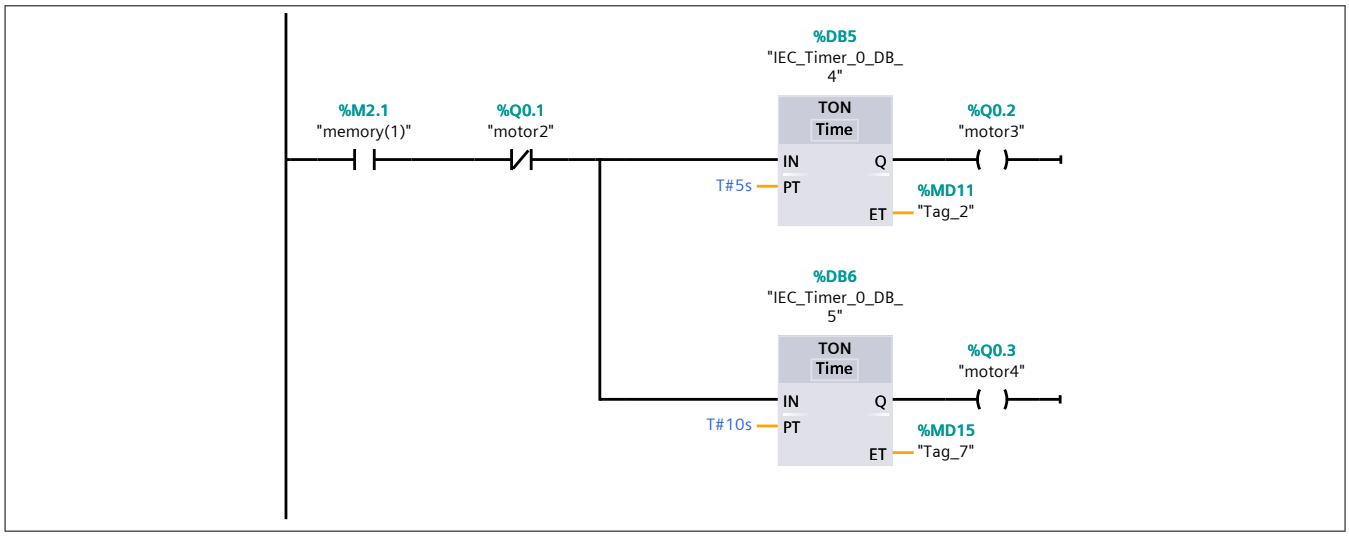

Network 4:

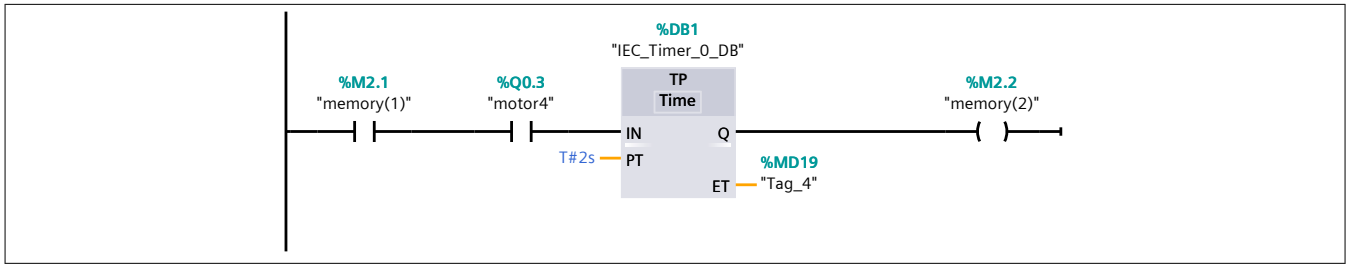

Project11141_june10 / PLC_1 [CPU 1215C DC/DC/DC] / Program blocks

Main [OB1]

Main Properties					
General					
Name	Main	**Number**	1	**Type**	OB
Language	LAD	**Numbering**	Automatic		
Information					
Title	"Main Program Sweep (Cycle)"	**Author**		**Comment**	Traffic lights where red light glows for 7s then yellow light glows fpor 3s then green light glows for 10s then yellow light glows for 3s then red light glows for 7s then repeats
Family		**Version**	0.1	**User-defined ID**	

Main			
Name	**Data type**	**Default value**	**Comment**
Input			
Initial_Call	Bool		Initial call of this OB
Remanence	Bool		=True, if remanent data are available
Temp			
Constant			

Network 1:

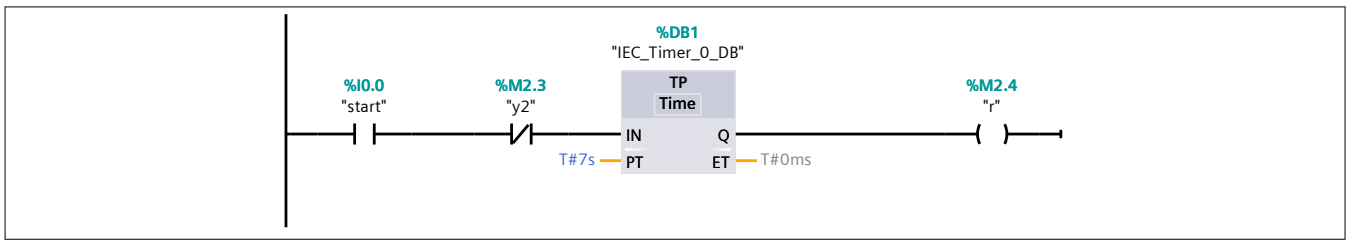

Network 2:

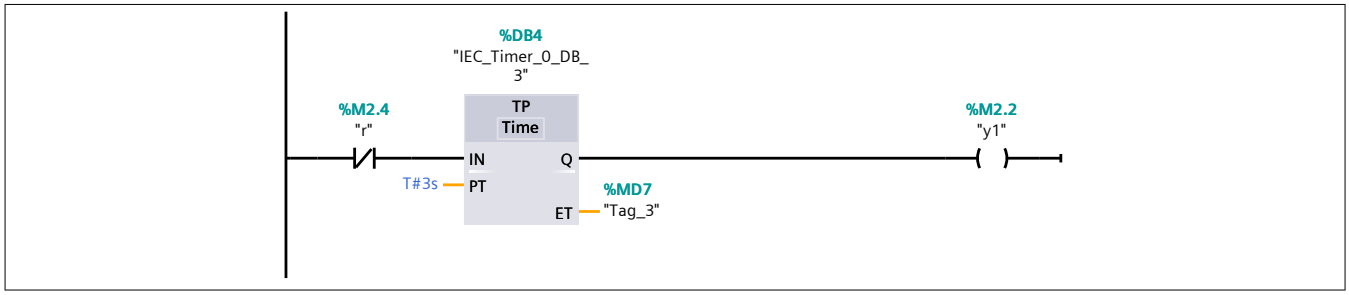

Network 4:

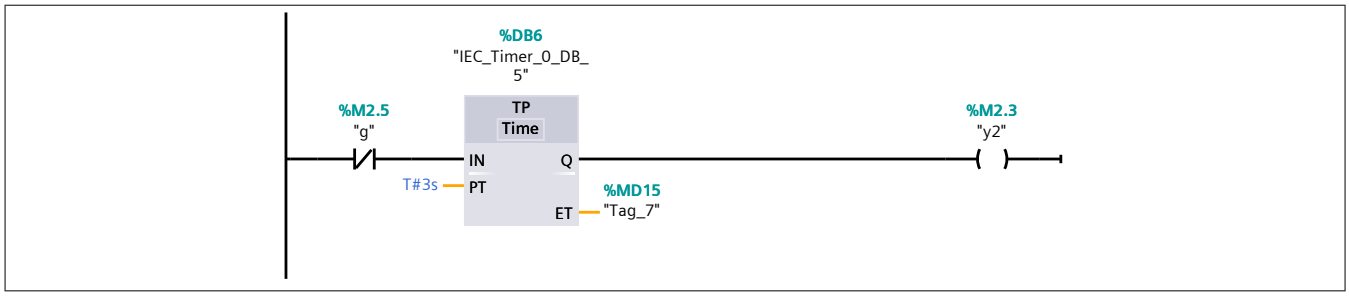

Network 5:

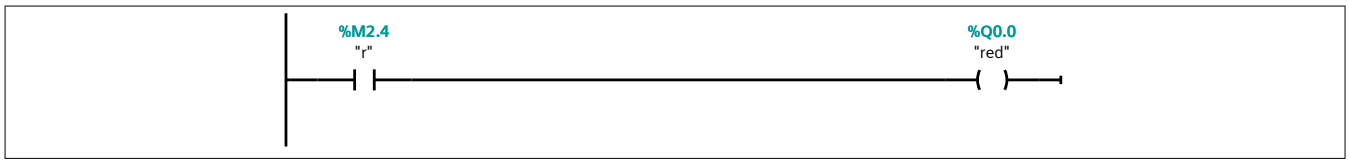

Network 3:

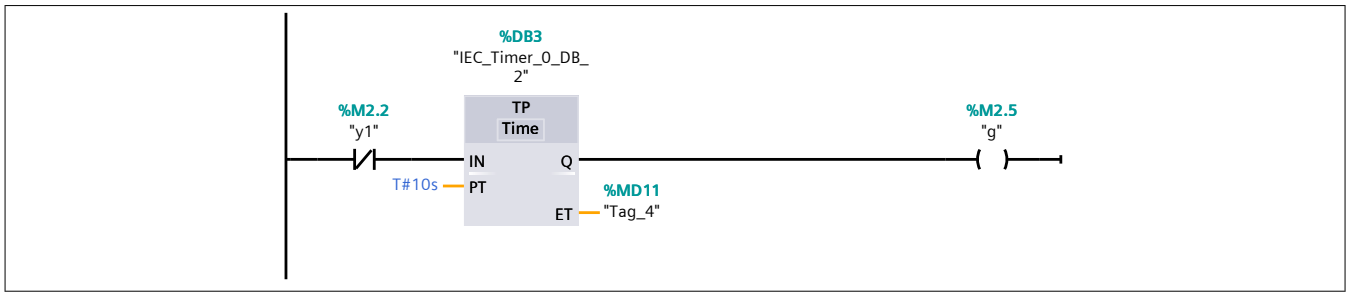

Network 7:

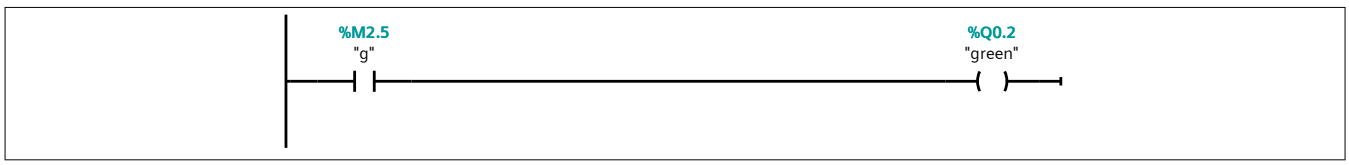

Network 6:

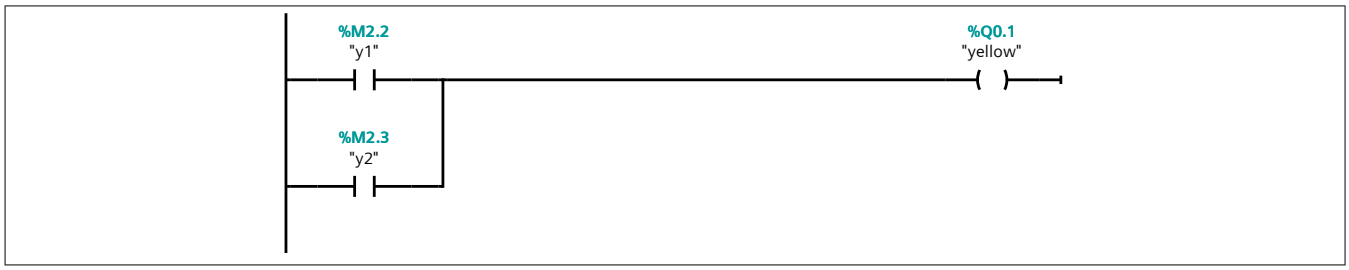

Project29 / PLC_1 [CPU 1215C DC/DC/DC] / Program blocks

Main [OB1]

Main Properties					
General					
Name	Main	**Number**	1	**Type**	OB
Language	LAD	**Numbering**	Automatic		
Information					
Title	"Main Program Sweep (Cycle)"	**Author**		**Comment**	the conveyor belt that can be activated electrically. There are 2 push buttons at the beginning of the conveyor belt S1 for start and S2 for stop. There are also 2 push buttons at the end of the conveyor. S3 for start and S4 for stop. it is possible to start and stop the conveyor belt from either end.
Family		**Version**	0.1	**User-defined ID**	

Main			
Name	**Data type**	**Default value**	**Comment**
Input			
Initial_Call	Bool		Initial call of this OB
Remanence	Bool		=True, if remanent data are available
Temp			
Constant			

Network 1:

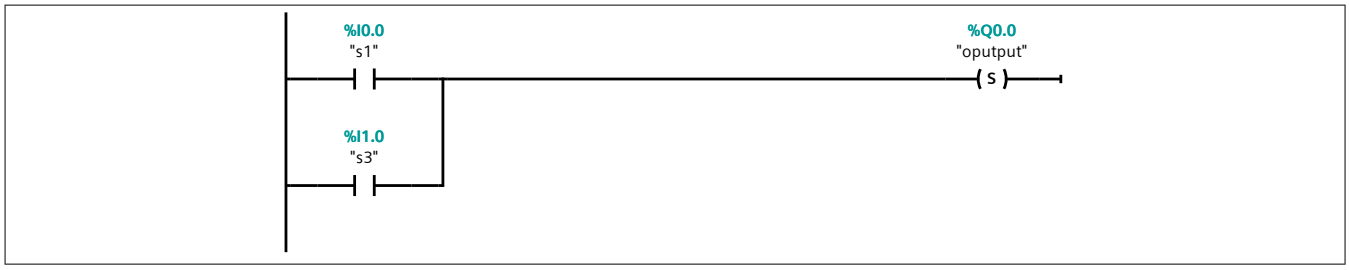

Network 2:

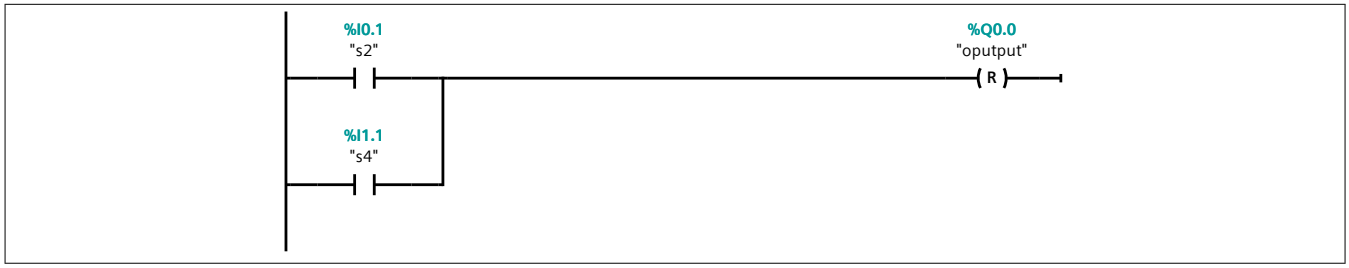

Project29 / PLC_1 [CPU 1215C DC/DC/DC] / Program blocks

Main [OB1]

Main Properties					
General					
Name	Main	**Number**	1	**Type**	OB
Language	LAD	**Numbering**	Automatic		
Information					
Title	"Main Program Sweep (Cycle)"	**Author**		**Comment**	Using single switch motor needs to turn ON and OFF. (i) When switch is pressed the motor will turn ON and stay ON. (ii) When switch is pressed again the motor will turn OFF.
Family		**Version**	0.1	**User-defined ID**	

Main			
Name	**Data type**	**Default value**	**Comment**
Input			
Initial_Call	Bool		Initial call of this OB
Remanence	Bool		=True, if remanent data are available
Temp			
Constant			

Network 1:

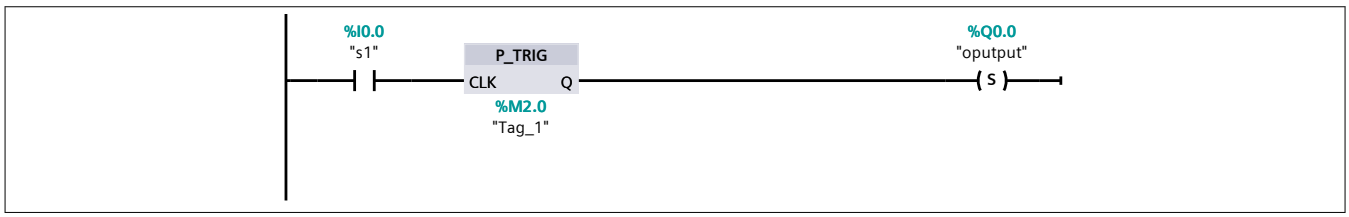

Network 2:

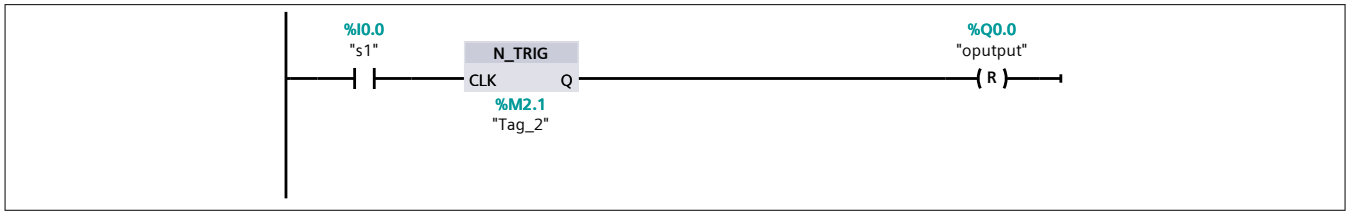

Project29 / PLC_1 [CPU 1215C DC/DC/DC] / Program blocks

Main [OB1]

Main Properties					
General					
Name	Main	**Number**	1	**Type**	OB
Language	LAD	**Numbering**	Automatic		
Information					
Title	"Main Program Sweep (Cycle)"	**Author**		**Comment**	When start switch is pressed motor will turn ON and when stop switch is pressed motor will turn OFF. The condition is that once stop is pressed motor should not turn ON for 10s. This is to prevent damage.
Family		**Version**	0.1	**User-defined ID**	

Main			
Name	**Data type**	**Default value**	**Comment**
Input			
Initial_Call	Bool		Initial call of this OB
Remanence	Bool		=True, if remanent data are available
Temp			
Constant			

Network 1:

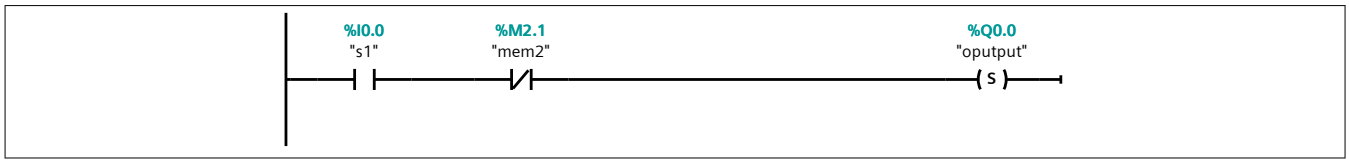

Network 2:

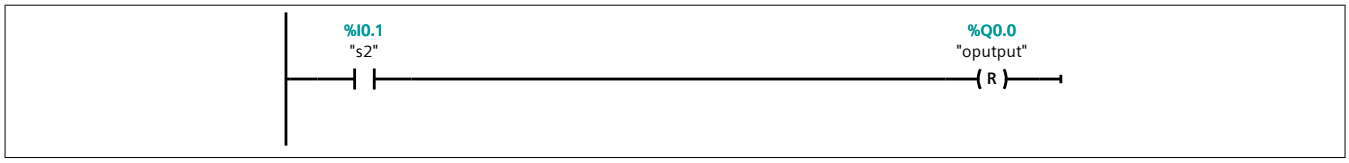

Network 3:

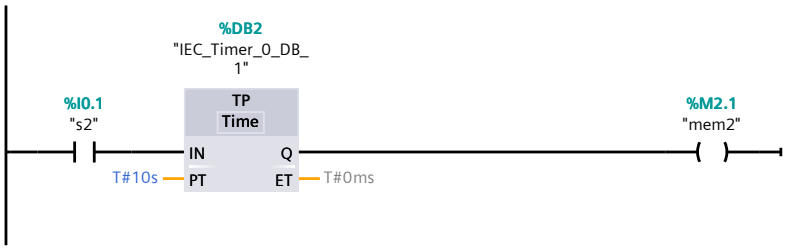

Network 4:

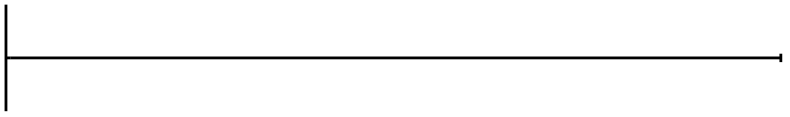

Project30 / PLC_1 [CPU 1215C DC/DC/DC] / Program blocks

Main [OB1]

Main Properties					
General					
Name	Main	**Number**	1	**Type**	OB
Language	LAD	**Numbering**	Automatic		
Information					
Title	"Main Program Sweep (Cycle)"	**Author**		**Comment**	3 Types of Counter
Family		**Version**	0.1	**User-defined ID**	

Main			
Name	**Data type**	**Default value**	**Comment**
Input			
Initial_Call	Bool		Initial call of this OB
Remanence	Bool		=True, if remanent data are available
Temp			
Constant			

Network 1:

i)Up Counter

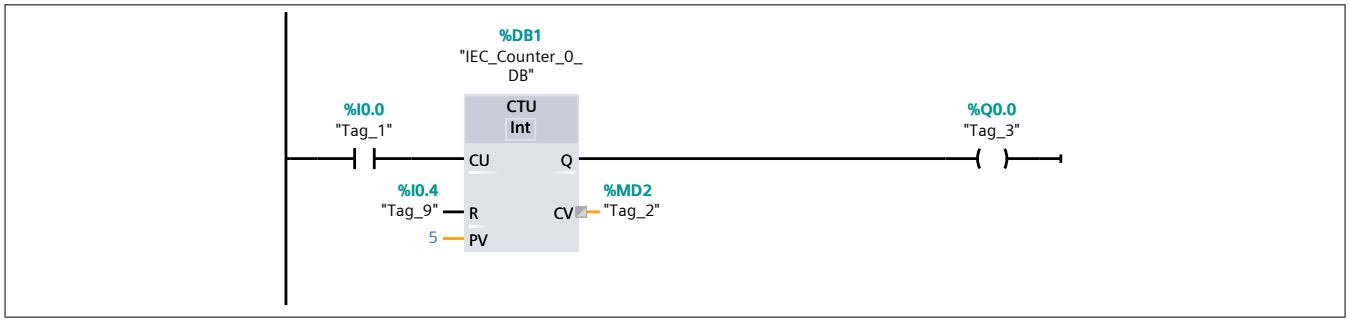

Network 2:

ii)Down Counter

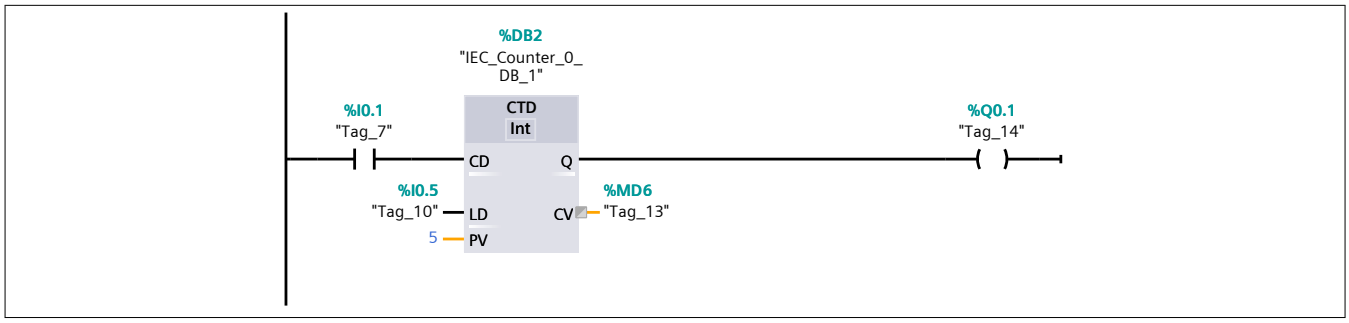

Network 3:

iii)Up-Down Counter

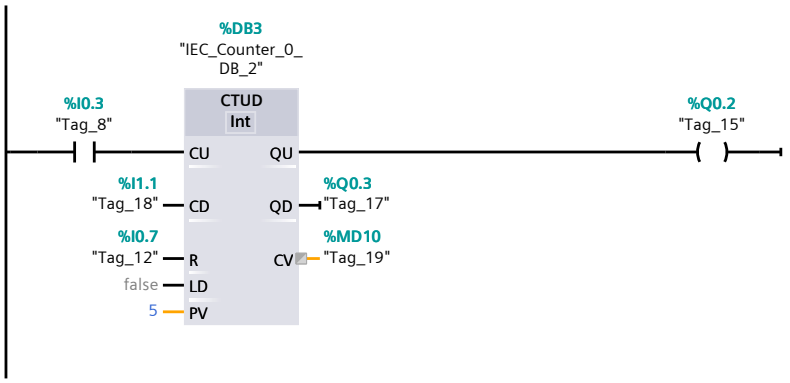
%DB3
"IEC_Counter_0_
DB_2"
CTUD
Int
%I0.3
"Tag_8"
CU
QU
%Q0.2
"Tag_15"
%I1.1
"Tag_18"
CD
QD
%Q0.3
"Tag_17"
%I0.7
"Tag_12"
R
CV
%MD10
"Tag_19"
false
LD
5
PV

Project30 / PLC_1 [CPU 1215C DC/DC/DC] / Program blocks

Main [OB1]

Main Properties					
General					
Name	Main	**Number**	1	**Type**	OB
Language	LAD	**Numbering**	Automatic		
Information					
Title	"Main Program Sweep (Cycle)"	**Author**		**Comment**	a classroom has capacity of 10 students there are 2 doors, 1 for entry and other for exit. When number of students in the classroom is less than 10, entry door has green light on it which remainON, when number of students in classroom is 10 or more than that red light goes ON and turn OFF green light which indicates that the classroom has reached it's maximum capacity
Family		**Version**	0.1	**User-defined ID**	

Main			
Name	**Data type**	**Default value**	**Comment**
Input			
Initial_Call	Bool		Initial call of this OB
Remanence	Bool		=True, if remanent data are available
Temp			
Constant			

Network 1:

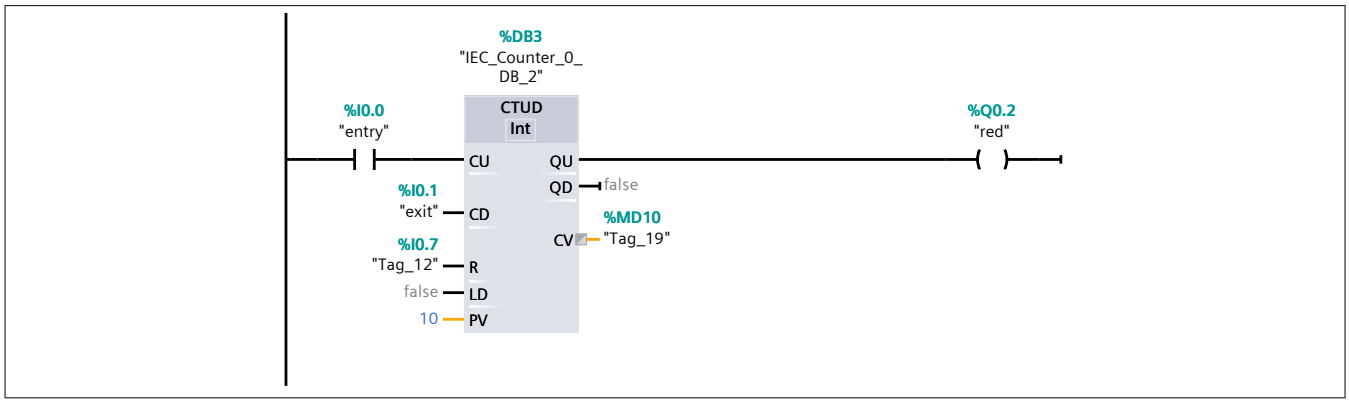

Network 2:

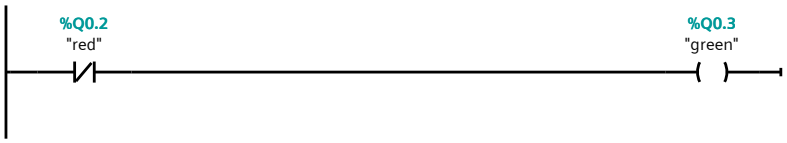
%Q0.2
"red"
%Q0.3
"green"

Projec_june_12 / PLC_1 [CPU 1215C DC/DC/DC] / Program blocks

Main [OB1]

Main Properties					
General					
Name	Main	**Number**	1	**Type**	OB
Language	LAD	**Numbering**	Automatic		
Information					
Title	"Main Program Sweep (Cycle)"	**Author**		**Comment**	When start button is pressed, motor conveyor must turn ON. S1 is an input sensor to count the parts, when count reaches 5motor convey-or runs for 10s. Motor2 must run for 15s after the motor conveyor.
Family		**Version**	0.1	**User-defined ID**	

Main			
Name	**Data type**	**Default value**	**Comment**
Input			
Initial_Call	Bool		Initial call of this OB
Remanence	Bool		=True, if remanent data are available
Temp			
Constant			

Network 1:

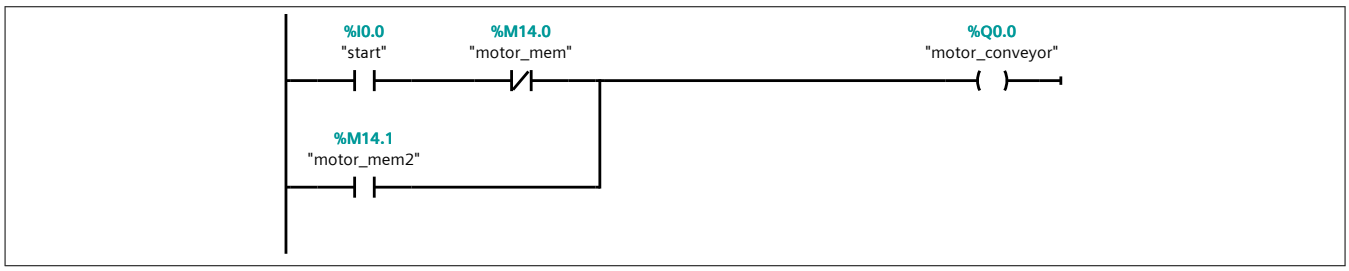

Network 2:

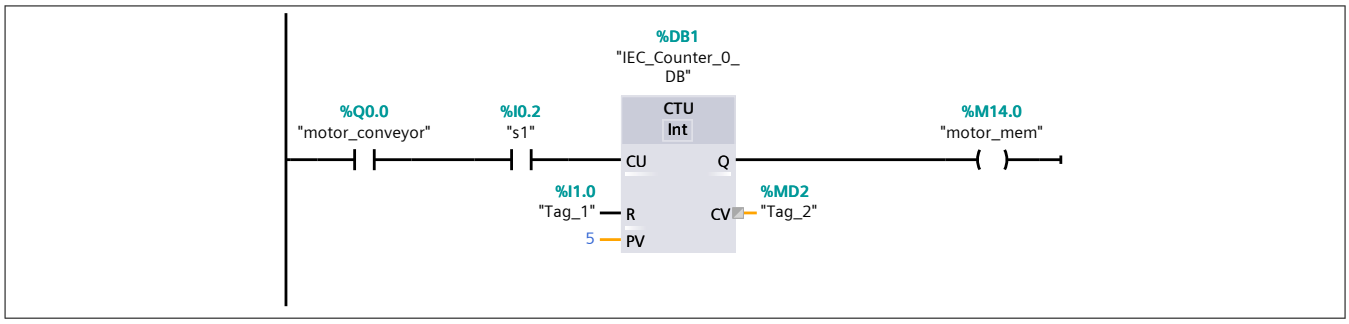

Network 3:

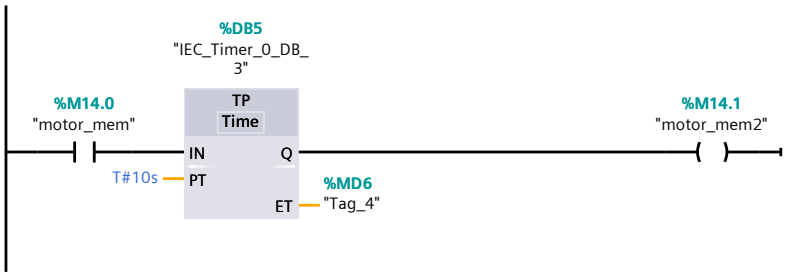
%DB5
"IEC_Timer_0_DB_
3"
%M14.0
"motor_mem"
TP
Time
IN
Q
T#10s
PT
ET
%MD6
"Tag_4"
%M14.1
"motor_mem2"

Network 4:

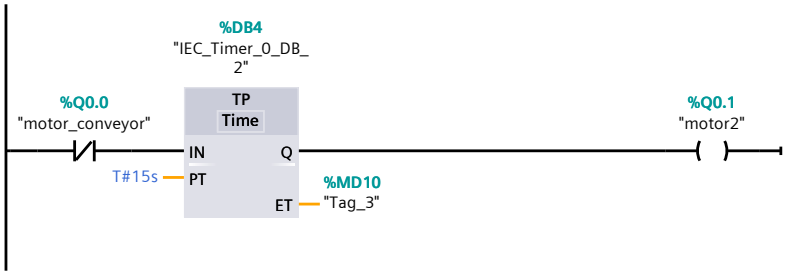
%DB4
"IEC_Timer_0_DB_
2"
%Q0.0
"motor_conveyor"
TP
Time
IN
Q
T#15s
PT
ET
%MD10
"Tag_3"
%Q0.1
"motor2"

Projec_june_12 / PLC_1 [CPU 1215C DC/DC/DC] / Program blocks

Main [OB1]

Main Properties					
General					
Name	Main	**Number**	1	**Type**	OB
Language	LAD	**Numbering**	Automatic		
Information					
Title	"Main Program Sweep (Cycle)"	**Author**		**Comment**	Write a ladder logic for bottle filling process. Start and Stop push button is used to start and stop the process. When start button is pressed, conveyor starts moving until the proximity sensor is ON. The solenoid valve is open for 5s. After 5s, conveyor starts moving. The above process should continue till 3 bottle are filled.
Family		**Version**	0.1	**User-defined ID**	

Main			
Name	**Data type**	**Default value**	**Comment**
Input			
Initial_Call	Bool		Initial call of this OB
Remanence	Bool		=True, if remanent data are available
Temp			
Constant			

Network 1:

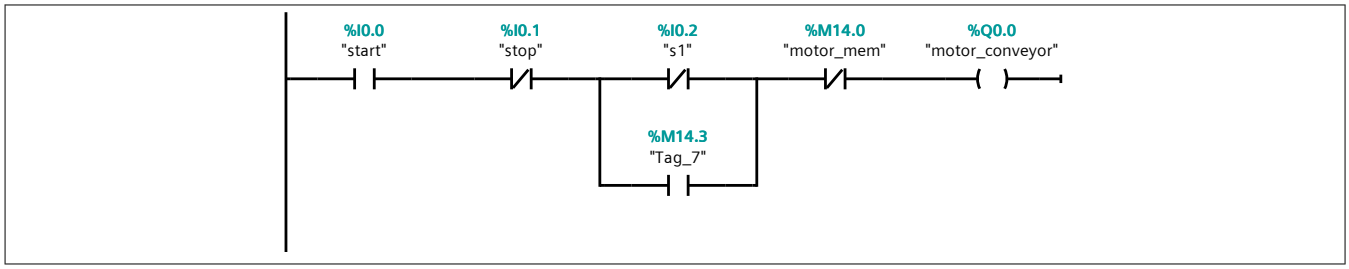

Network 2:

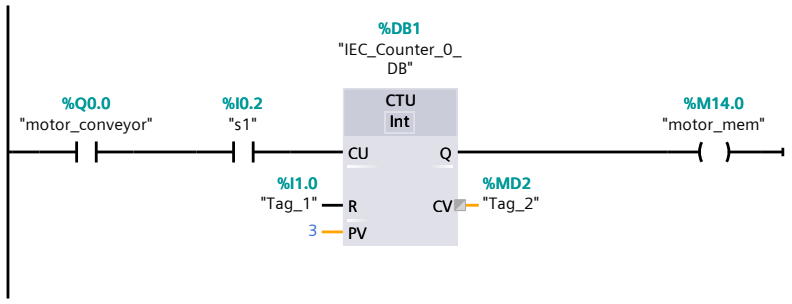

Network 3:

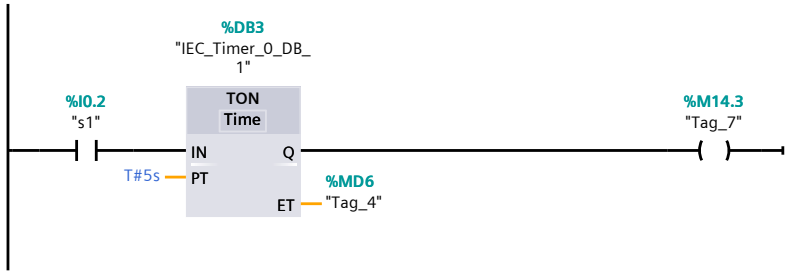

Network 4:

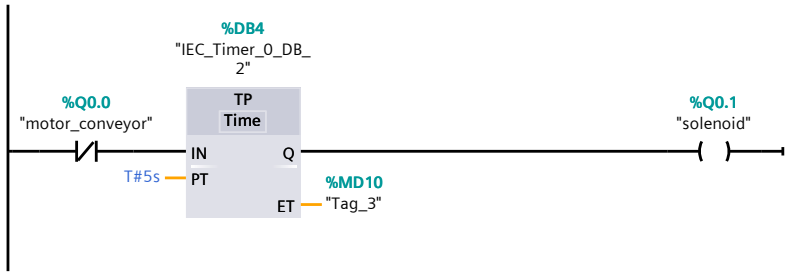

Project_june_13 / PLC_1 [CPU 1215C DC/DC/DC] / Program blocks

Main [OB1]

Main Properties					
General					
Name	Main	**Number**	1	**Type**	OB
Language	LAD	**Numbering**	Automatic		
Information					
Title	"Main Program Sweep (Cycle)"	**Author**		**Comment**	When start switch is pressed
Family		**Version**	0.1	**User-defined ID**	

Main			
Name	**Data type**	**Default value**	**Comment**
Input			
Initial_Call	Bool		Initial call of this OB
Remanence	Bool		=True, if remanent data are available
Temp			
Constant			

Network 1:

i) If water level is 0, motor should turn ON till water level reaches 95

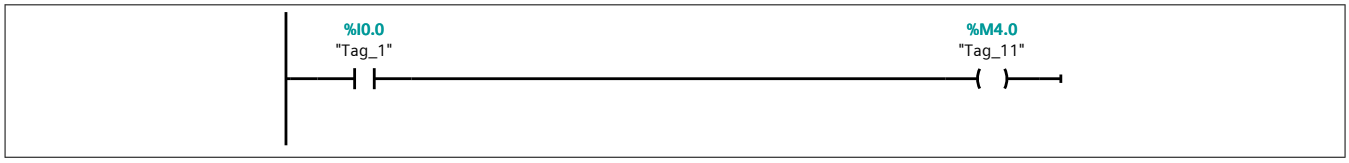

Network 2:

ii) If water level indicates the valuse below 5 low level water alarm should ON

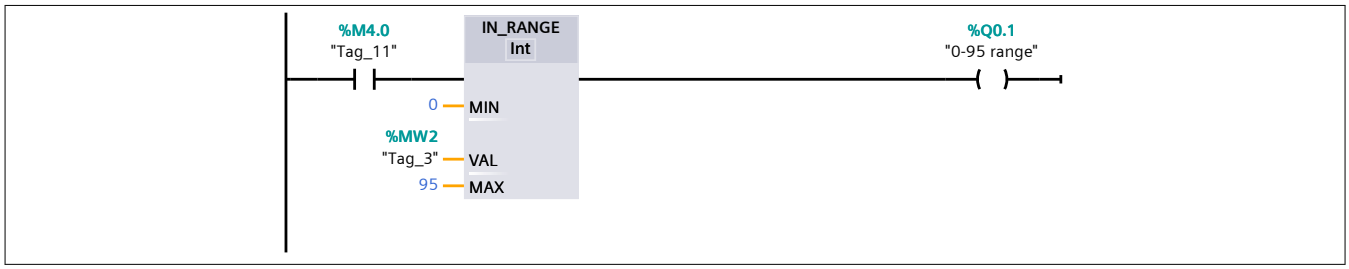

Network 3:

iii) If water level indicates the value above 95 high level water alarm should ON

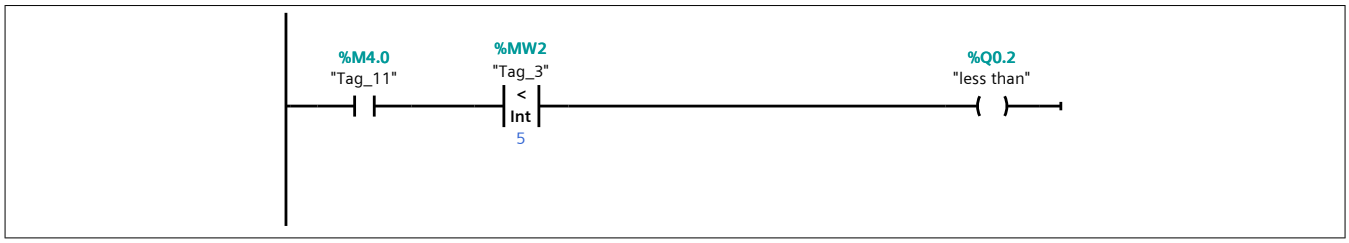

Network 4:

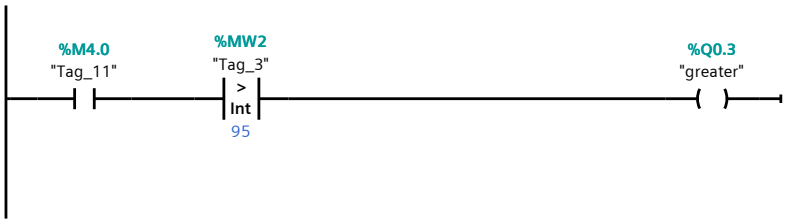

Network 5:

iv) If water level is exactly at 95 steamer should turn ON

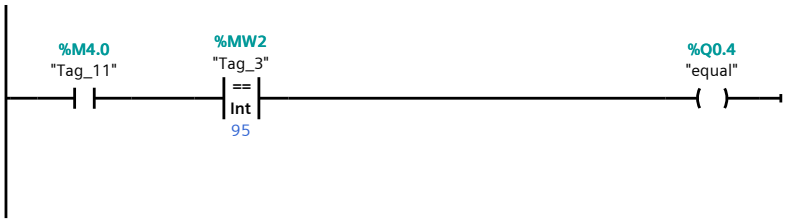

Network 6:

v) System under control indication should always ON when water level is not equals to 100.

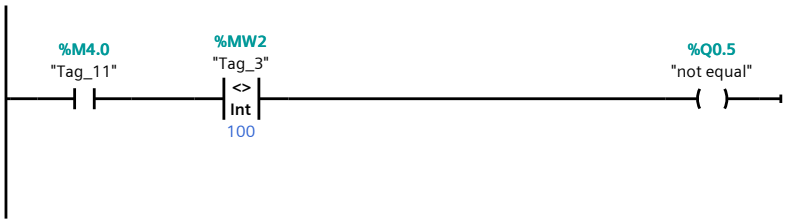

Project / PLC_1 [CPU 1215C DC/DC/DC] / Program blocks

Main [OB1]

Main Properties					
General					
Name	Main	**Number**	1	**Type**	OB
Language	LAD	**Numbering**	Automatic		
Information					
Title	"Main Program Sweep (Cycle)"	**Author**		**Comment**	A parking plot has total capacity of 5 cars. Number of empty spots are displayed outside the parking plot and which spot are available is to be indicated by led's. Implemented this in PLC using ladder logic diagram.
Family		**Version**	0.1	**User-defined ID**	

Main			
Name	**Data type**	**Default value**	**Comment**
Input			
Initial_Call	Bool		Initial call of this OB
Remanence	Bool		=True, if remanent data are available
Temp			
Constant			

Network 1:

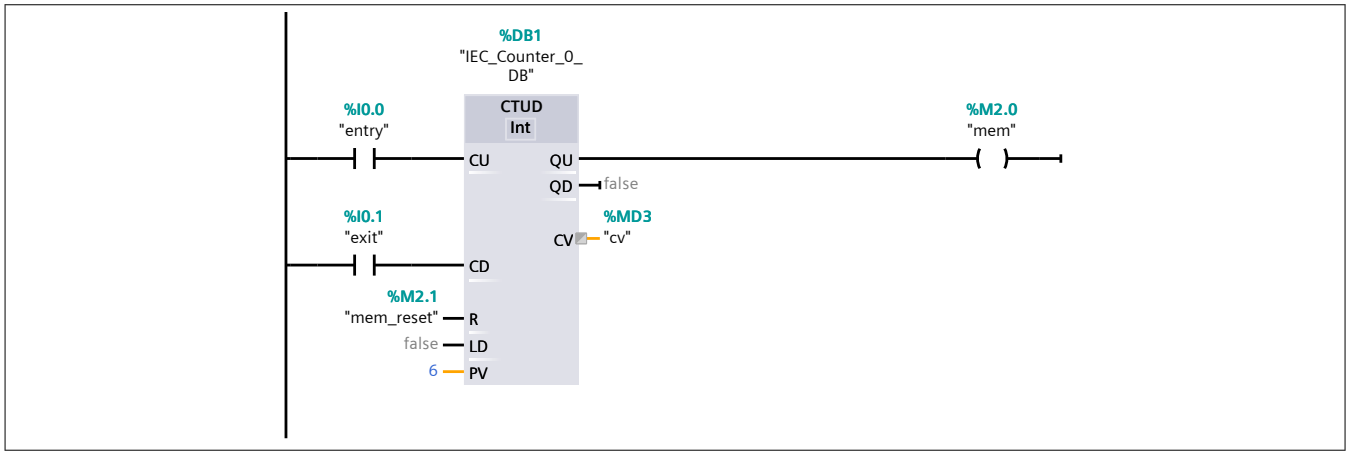

Network 2:

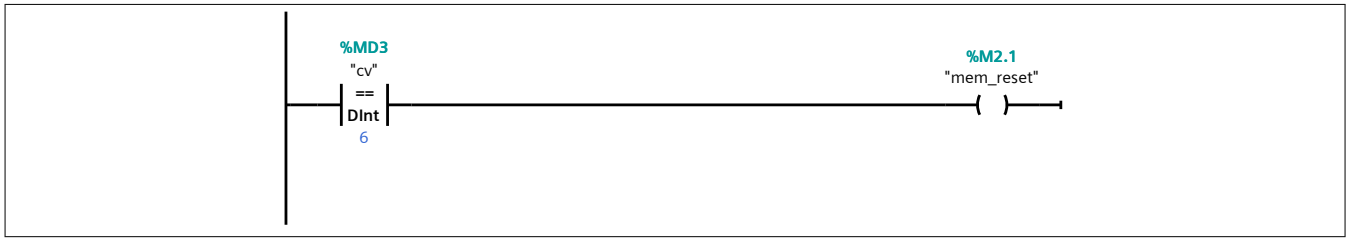

Network 3:

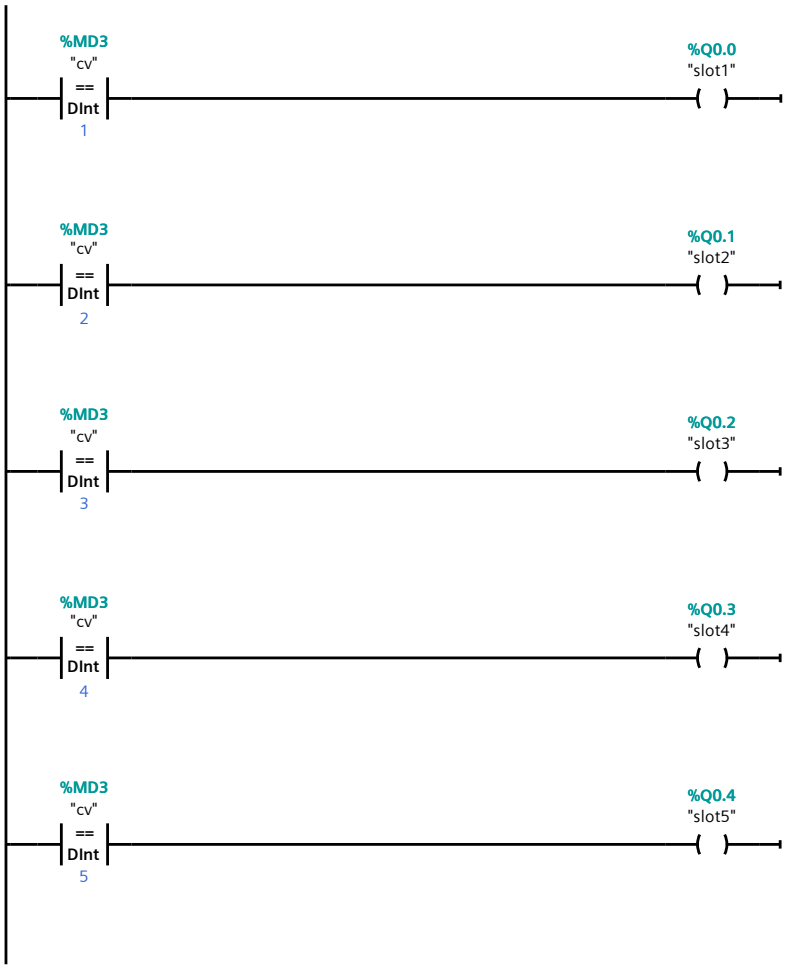
%MD3
"cv"
==
DInt
1
%Q0.0
"slot1"
%MD3
"cv"
==
DInt
2
%Q0.1
"slot2"
%MD3
"cv"
==
DInt
3
%Q0.2
"slot3"
%MD3
"cv"
==
DInt
4
%Q0.3
"slot4"
%MD3
"cv"
==
DInt
5
%Q0.4
"slot5"

Project / PLC_1 [CPU 1215C DC/DC/DC] / Program blocks

Main [OB1]

Main Properties					
General					
Name	Main	**Number**	1	**Type**	OB
Language	LAD	**Numbering**	Automatic		
Information					
Title	"Main Program Sweep (Cycle)"	**Author**		**Comment**	When S1 is pressed i) Once M1 will turn ON for 10s. ii) Twice M1, M2 will turn ON for 10s each. iii) Thrice M1, M2, M3 will turn ON for 10s each.
Family		**Version**	0.1	**User-defined ID**	

Main			
Name	**Data type**	**Default value**	**Comment**
Input			
Initial_Call	Bool		Initial call of this OB
Remanence	Bool		=True, if remanent data are available
Temp			
Constant			

Network 1:

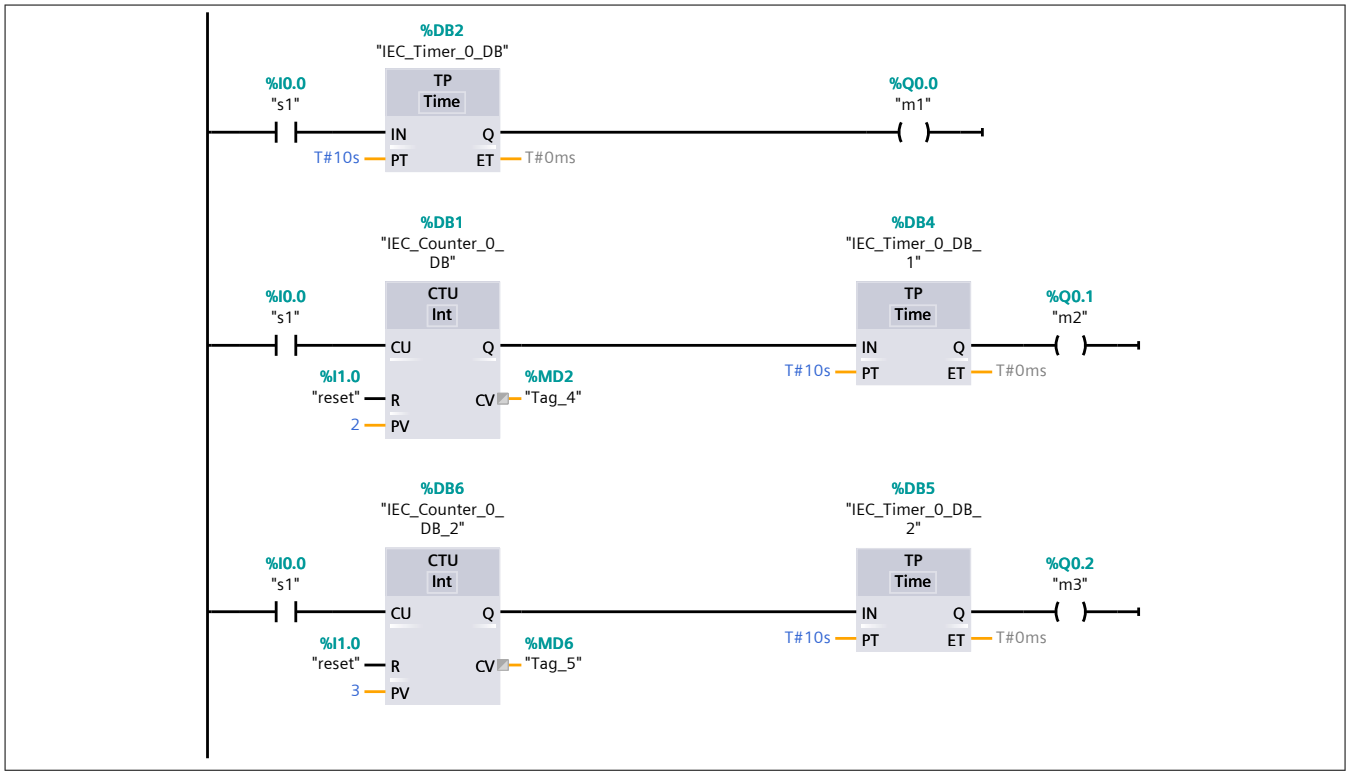

june_16 / PLC_1 [CPU 1215C DC/DC/DC] / Program blocks

Main [OB1]

Main Properties					
General					
Name	Main	**Number**	1	**Type**	OB
Language	LAD	**Numbering**	Automatic		
Information					
Title	"Main Program Sweep (Cycle)"	**Author**		**Comment**	When S1 is pressed i) Once M 1 will turn 0N for 10s ii) Twice M1, M2 will turn on for 10s each iii) Thrice M1, M2 and M3 will turn on for 10s each
Family		**Version**	0.1	**User-defined ID**	

Main			
Name	**Data type**	**Default value**	**Comment**
Input			
Initial_Call	Bool		Initial call of this OB
Remanence	Bool		=True, if remanent data are available
Temp			
Constant			

Network 1:

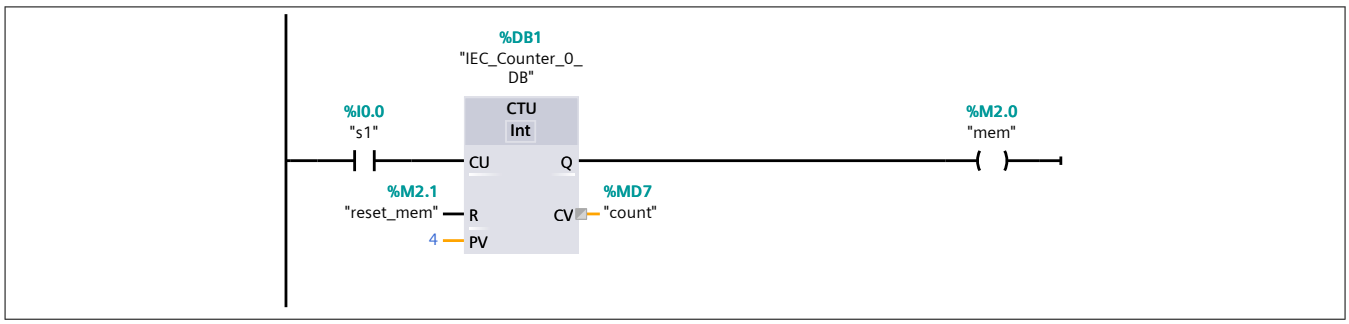

Network 2:

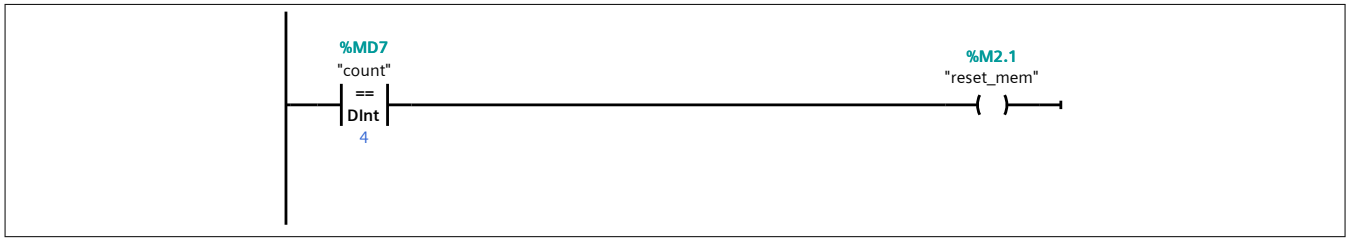

Network 3:

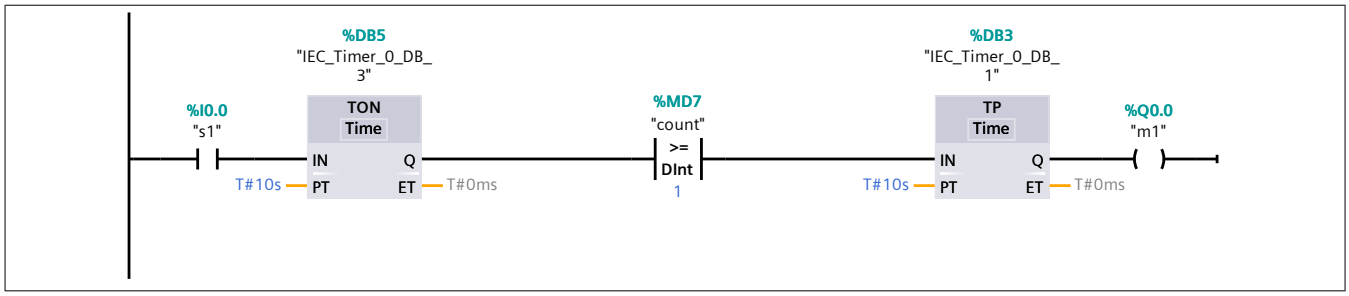

Network 4:

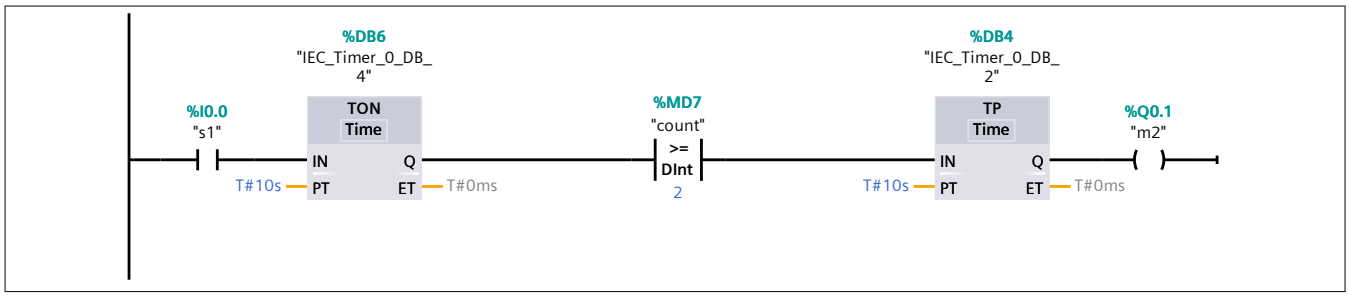

Network 5:

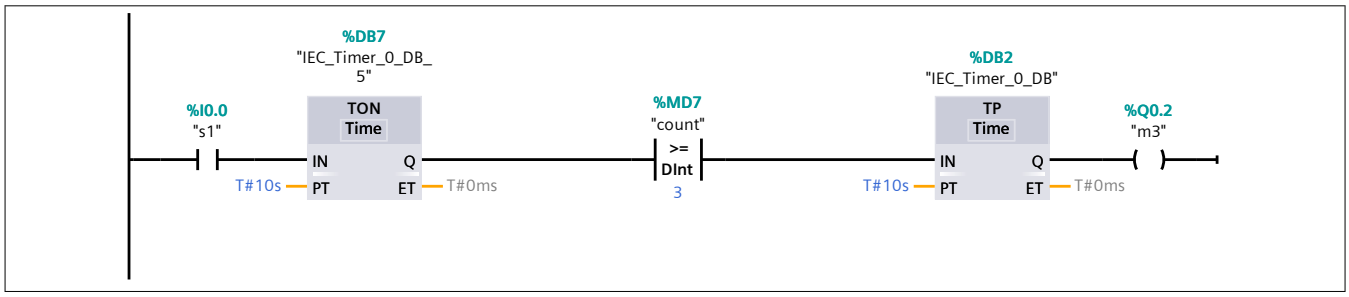

june_16 / PLC_1 [CPU 1215C DC/DC/DC] / Program blocks

Main [OB1]

Main Properties					
General					
Name	Main	**Number**	1	**Type**	OB
Language	LAD	**Numbering**	Automatic		
Information					
Title	"Main Program Sweep (Cycle)"	**Author**		**Comment**	When start button is pressed pump must turn ON for 5s, mixer must turn ON for 7s and then drain must turn ON for 9s. Process must repeat untill stop button is pressed. Use move operation, comparator and timer.
Family		**Version**	0.1	**User-defined ID**	

Main			
Name	**Data type**	**Default value**	**Comment**
Input			
Initial_Call	Bool		Initial call of this OB
Remanence	Bool		=True, if remanent data are available
Temp			
Constant			

Network 1:

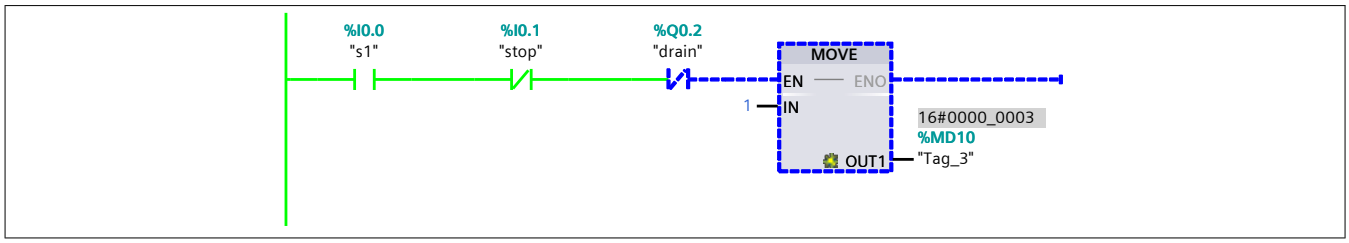

Network 3:

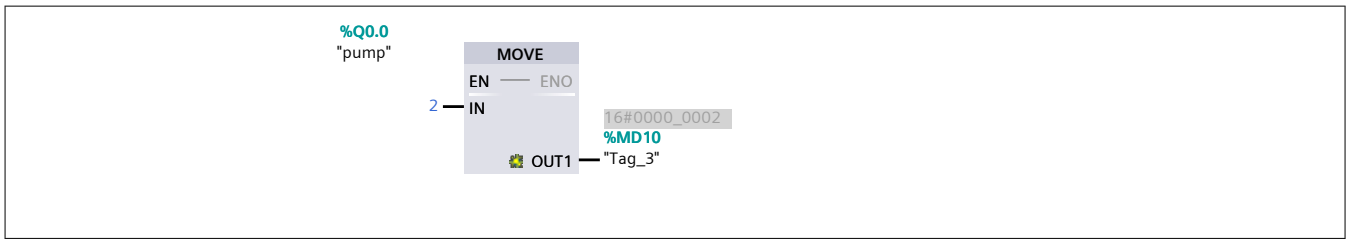

Network 4:

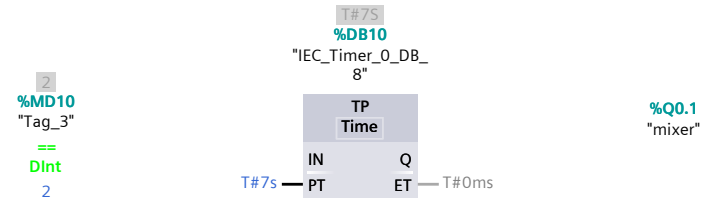

Network 5:

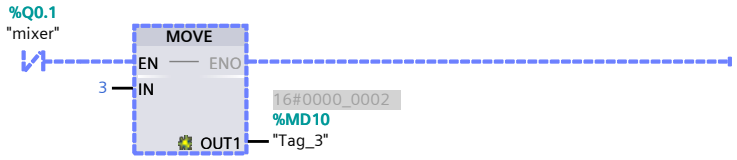

Network 6:

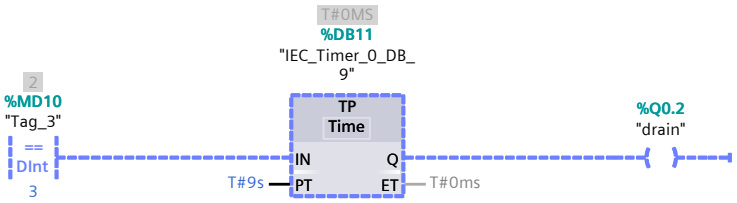

Network 2:

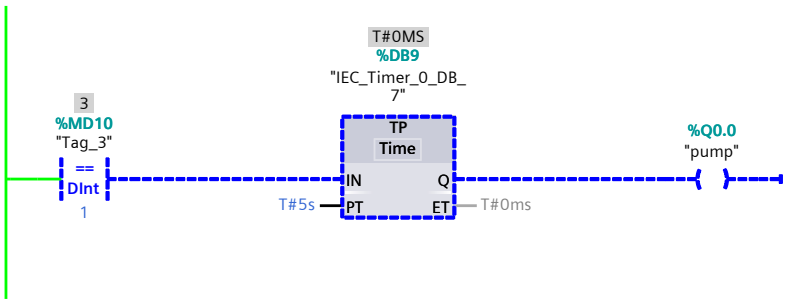

Project_june_17 / PLC_1 [CPU 1215C DC/DC/DC] / Program blocks

Main [OB1]

Main Properties					
General					
Name	Main	**Number**	1	**Type**	OB
Language	LAD	**Numbering**	Automatic		
Information					
Title	"Main Program Sweep (Cycle)"	**Author**		**Comment**	A water tank application, where sensor is used to monitor the water level in the tank.To this tank pump is fitted to supply water from main tank when start push button is pressed.Condition is when water level is above 95 motor should not run.
Family		**Version**	0.1	**User-defined ID**	

Main			
Name	**Data type**	**Default value**	**Comment**
Input			
Initial_Call	Bool		Initial call of this OB
Remanence	Bool		=True, if remanent data are available
Temp			
Constant			

Network 1:

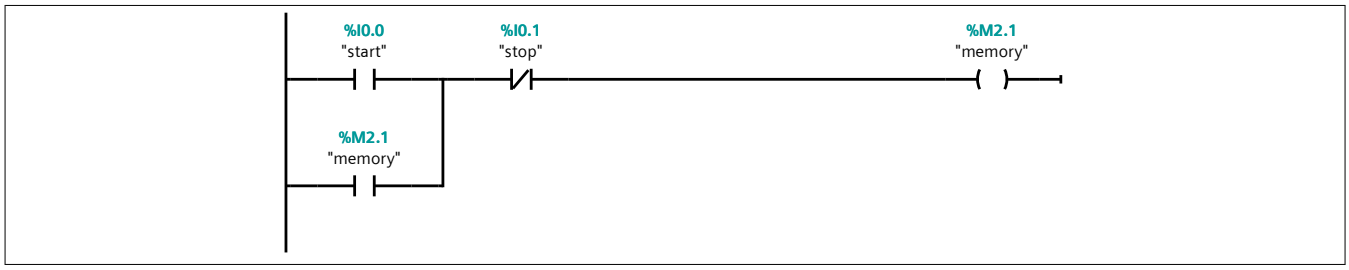

Network 2:

Network 3:

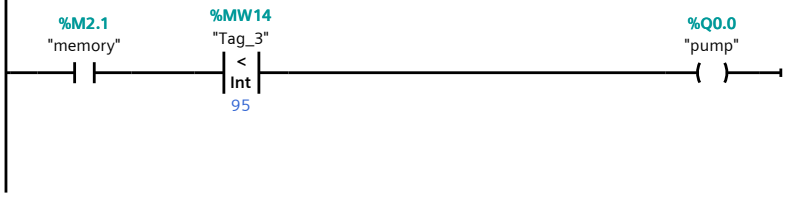
%M2.1
"memory"
%MW14
"Tag_3"
<
Int
95
%Q0.0
"pump"

Project_june_17 / PLC_1 [CPU 1215C DC/DC/DC] / Program blocks

Main [OB1]

Main Properties					
General					
Name	Main	**Number**	1	**Type**	OB
Language	LAD	**Numbering**	Automatic		
Information					
Title	"Main Program Sweep (Cycle)"	**Author**		**Comment**	A path inspection station for path height fitted with linear displacement transfuser, whose output is 0-10V DC and two cyl-inders, C1 for accept and C2 for reject, The height of a path lies between 45 to 50 mm, then C1 has to turn ON and should OFF after 5 seconds. If path height is other than that the reject cylinder C2 should ON and should OFF after 5 seconds.
Family		**Version**	0.1	**User-defined ID**	

Main			
Name	**Data type**	**Default value**	**Comment**
Input			
Initial_Call	Bool		Initial call of this OB
Remanence	Bool		=True, if remanent data are available
Temp			
Constant			

Network 1:

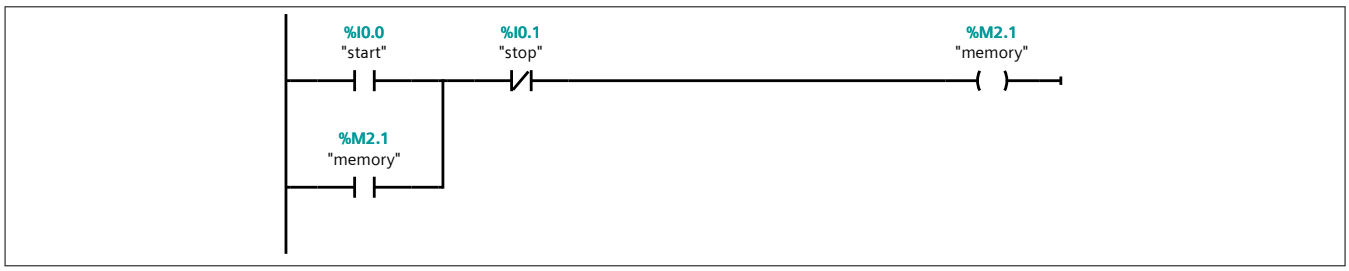

Network 2:

Network 3:

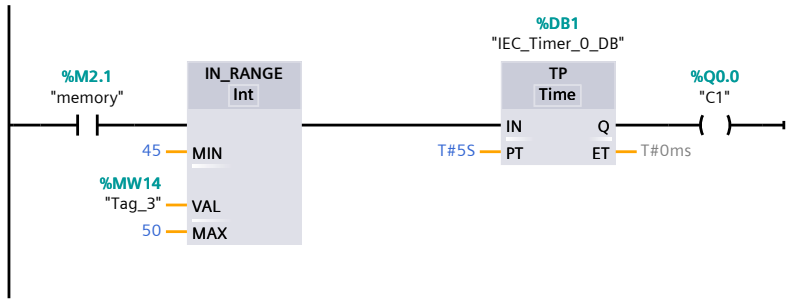

Network 4:

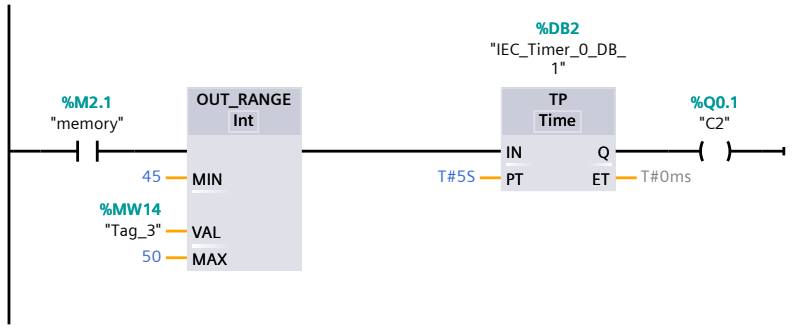

Project_june_17 / PLC_1 [CPU 1215C DC/DC/DC] / Program blocks

Main [OB1]

Main Properties					
General					
Name	Main	**Number**	1	**Type**	OB
Language	LAD	**Numbering**	Automatic		
Information					
Title	"Main Program Sweep (Cycle)"	**Author**		**Comment**	7 segment display using 4 inputs
Family		**Version**	0.1	**User-defined ID**	

Main			
Name	**Data type**	**Default value**	**Comment**
Input			
Initial_Call	Bool		Initial call of this OB
Remanence	Bool		=True, if remanent data are available
Temp			
Constant			

Network 2:

b

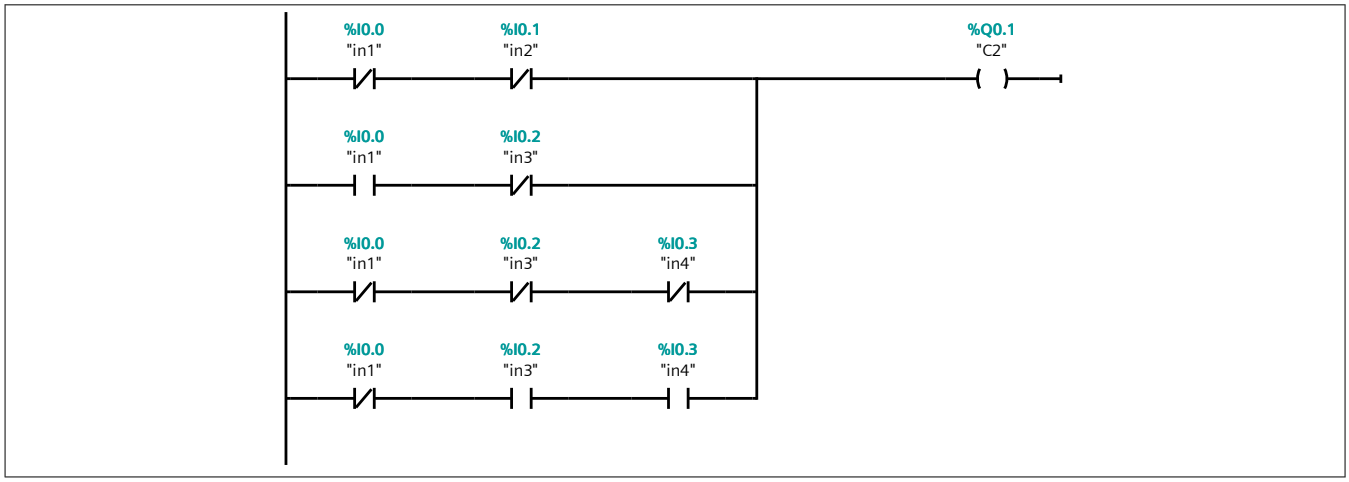

Network 3:

c

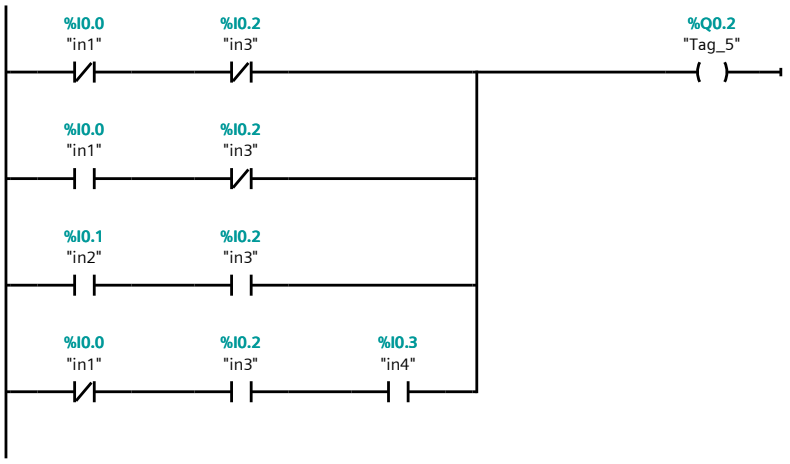

Network 4:

d

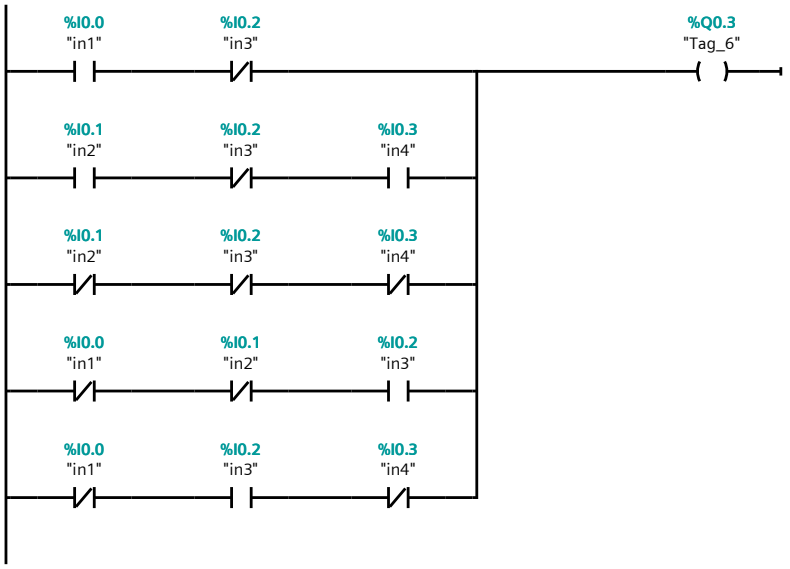

Network 5:

g

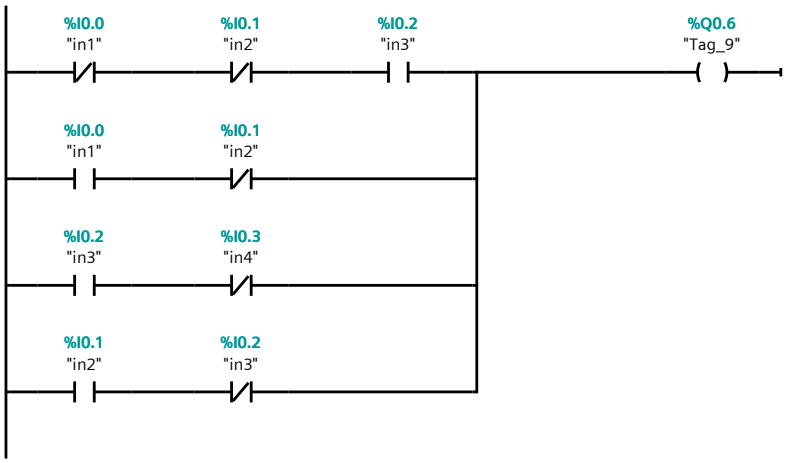

Network 6:

f

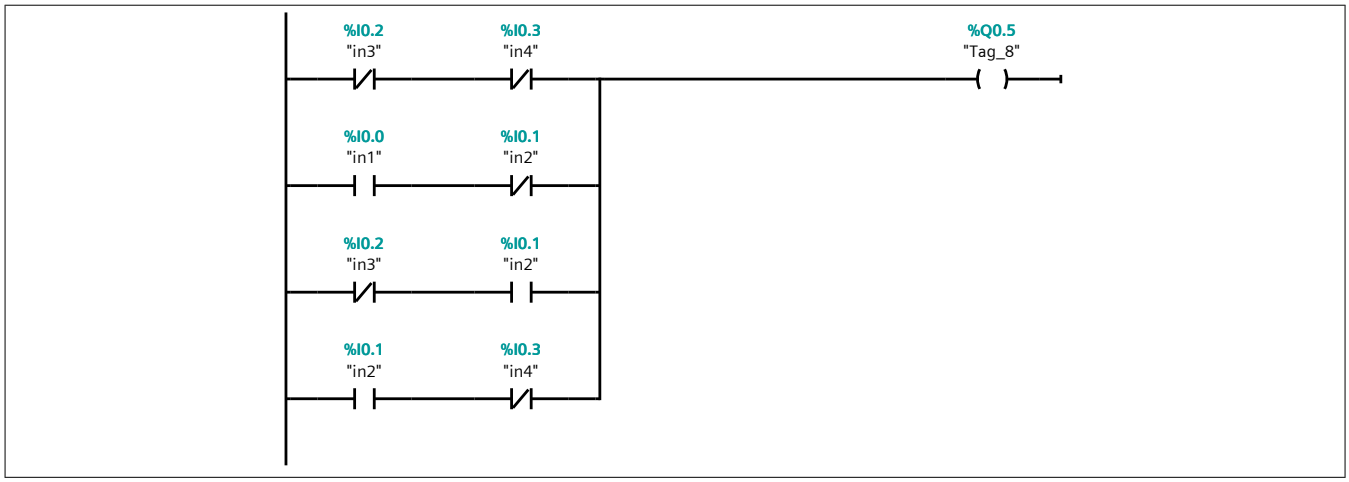

Network 7:

e

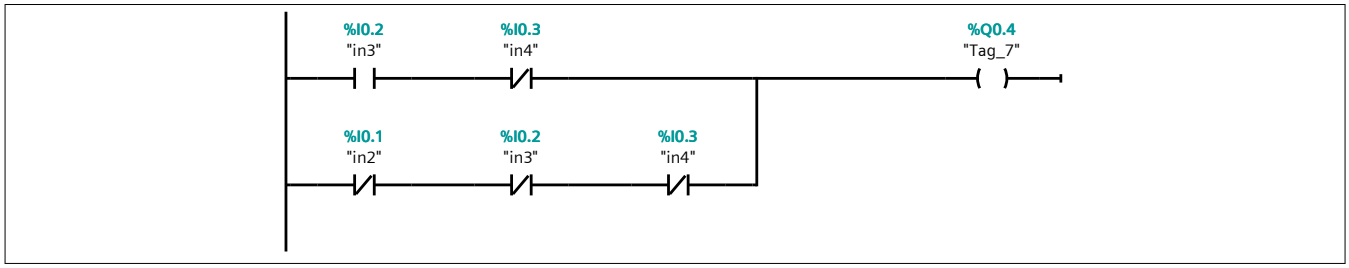

Network 1:

a

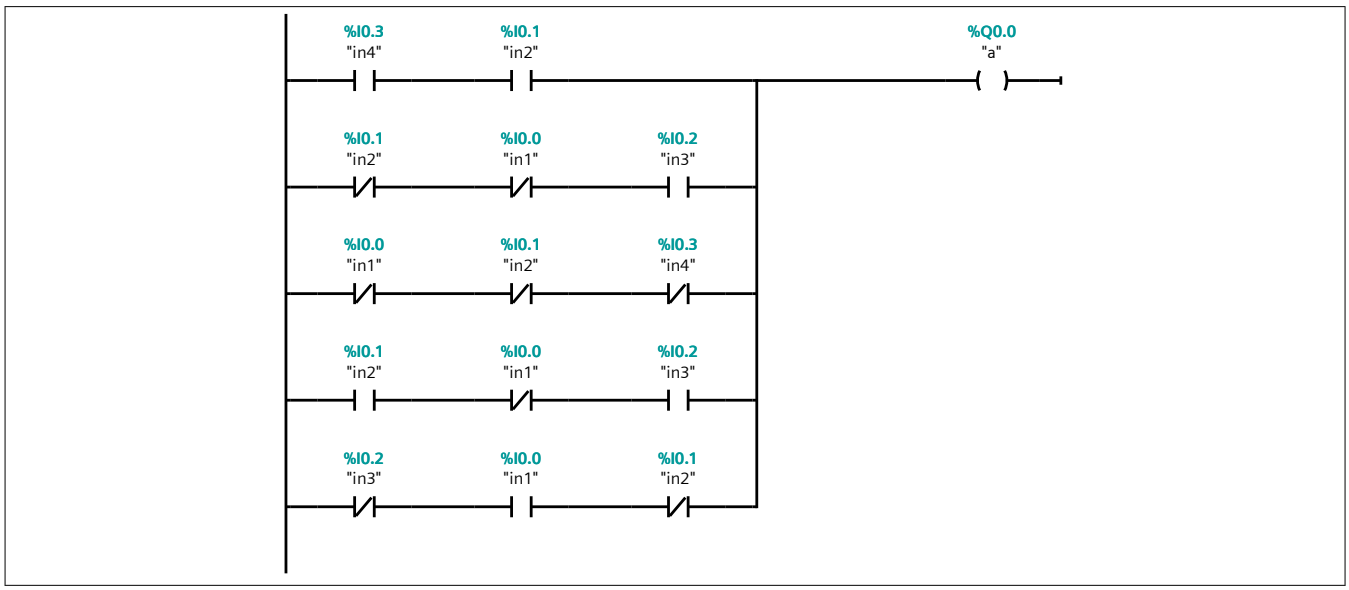

Project_june18 / PLC_1 [CPU 1215C DC/DC/DC] / Program blocks

Main [OB1]

Main Properties					
General					
Name	Main	**Number**	1	**Type**	OB
Language	LAD	**Numbering**	Automatic		
Information					
Title	"Main Program Sweep (Cycle)"	**Author**		**Comment**	Consider the industrial application of parking system, sensor 1is used for counting parts and hot air blower is used to shrink the package. When start p[ush button is pressed, conveyor motor k1 will start. When conveyor take parts, sensor 1 senses and produce signal which is counted by counter. When it reaches 5 parts the conveyor has to run for 15s and whole system has to go OFF.
Family		**Version**	0.1	**User-defined ID**	

Main			
Name	**Data type**	**Default value**	**Comment**
Input			
Initial_Call	Bool		Initial call of this OB
Remanence	Bool		=True, if remanent data are available
Temp			
Constant			

Network 1:

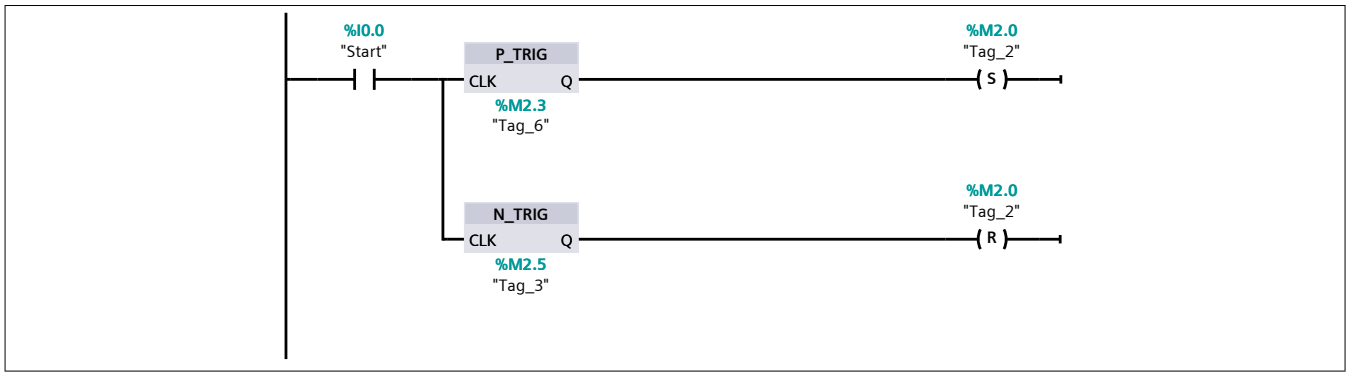

Network 2:

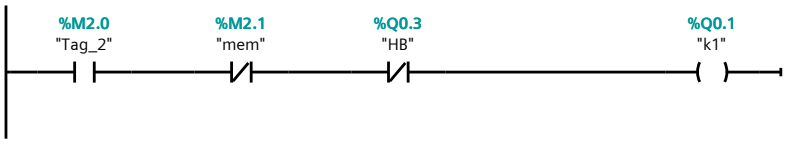

Network 3:

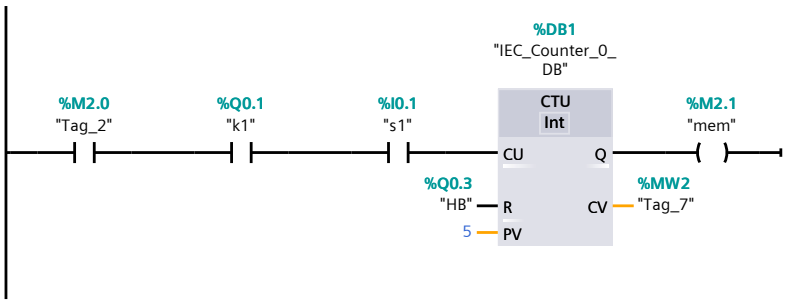

Network 4:

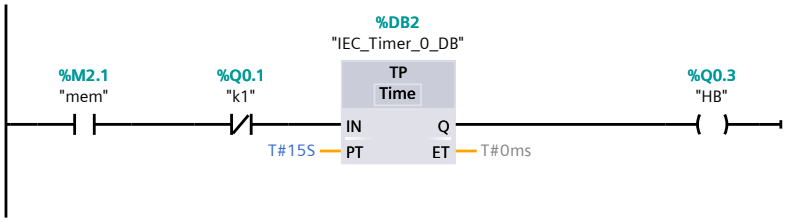

Project_june18 / PLC_1 [CPU 1215C DC/DC/DC] / Program blocks

Main [OB1]

Main Properties					
General					
Name	Main	**Number**	1	**Type**	OB
Language	LAD	**Numbering**	Automatic		
Information					
Title	"Main Program Sweep (Cycle)"	**Author**		**Comment**	The system to be controlled by PLC comsists of 2 belts. If the start button is pressed, conveyer belt 1 wil begin to run, after 5 sec, conveyer belt 2 will be active, after the whole system runs for 15 sec, conveyer belt 1 will stop then conveyer belt 2 continues to move for 5 sec and then it will stop also the system reset by stop button at any time.
Family		**Version**	0.1	**User-defined ID**	

Main			
Name	**Data type**	**Default value**	**Comment**
Input			
Initial_Call	Bool		Initial call of this OB
Remanence	Bool		=True, if remanent data are available
Temp			
Constant			

Network 1:

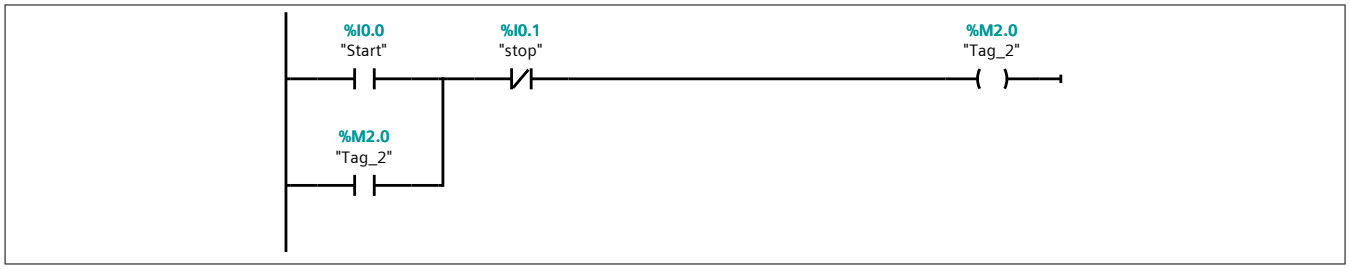

Network 3:

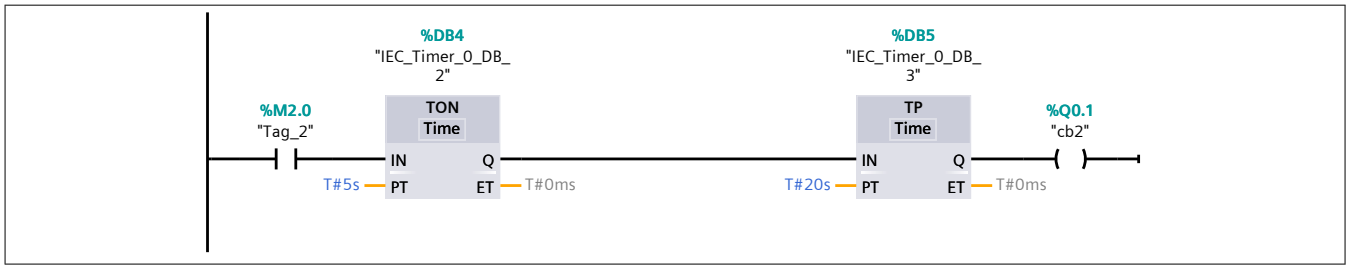

Network 4:

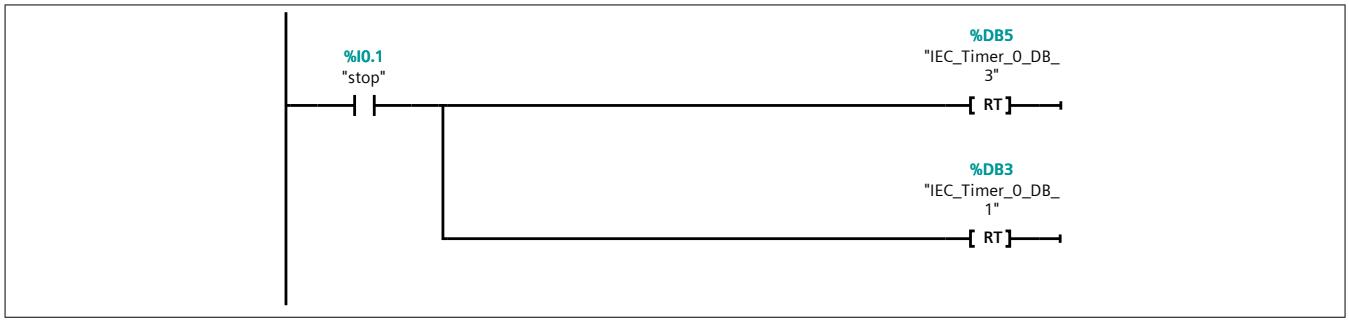

Network 5:

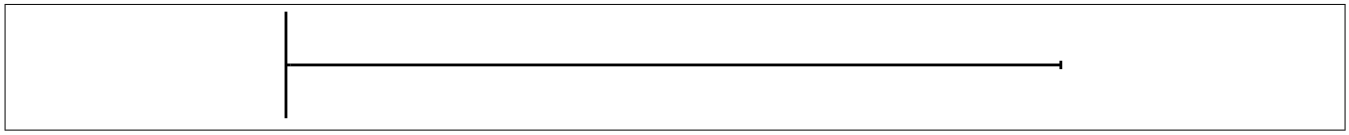

Network 2:

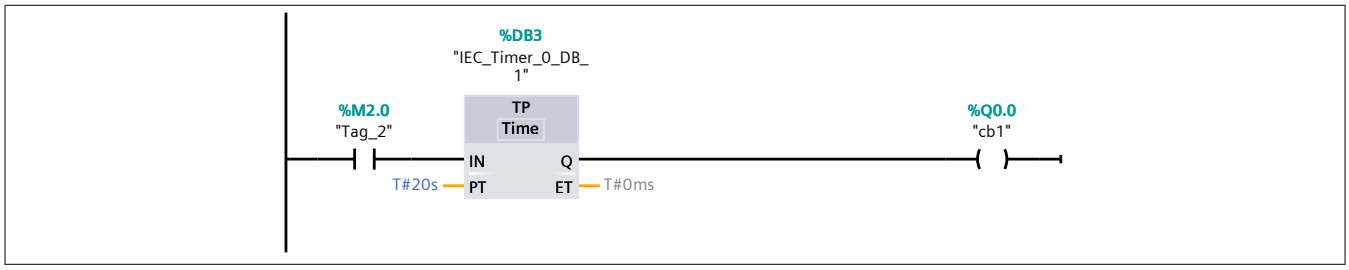

Project_june_19 / PLC_1 [CPU 1215C DC/DC/DC] / Program blocks

Main [OB1]

Main Properties					
General					
Name	Main	**Number**	1	**Type**	OB
Language	LAD	**Numbering**	Automatic		
Information					
Title	"Main Program Sweep (Cycle)"	**Author**		**Comment**	When the start button is pressed, solenoid a energizes to start filling the tank. As the tank fills, the empty level sensor switch closes. When the tank is full, the full level switch closes. Solenoid a is de-energized. The mixer motor starts and runs for 30sec to mix the liquid. When the mixer motor stops,Solenoid b is energized to empty the tank. When the tank is completely empty, the empty sensor switch opens to de-energize solenoid b. Start button is pressed to repeat the sequence
Family		**Version**	0.1	**User-defined ID**	

Main			
Name	**Data type**	**Default value**	**Comment**
Input			
Initial_Call	Bool		Initial call of this OB
Remanence	Bool		=True, if remanent data are available
Temp			
Constant			

Network 1:

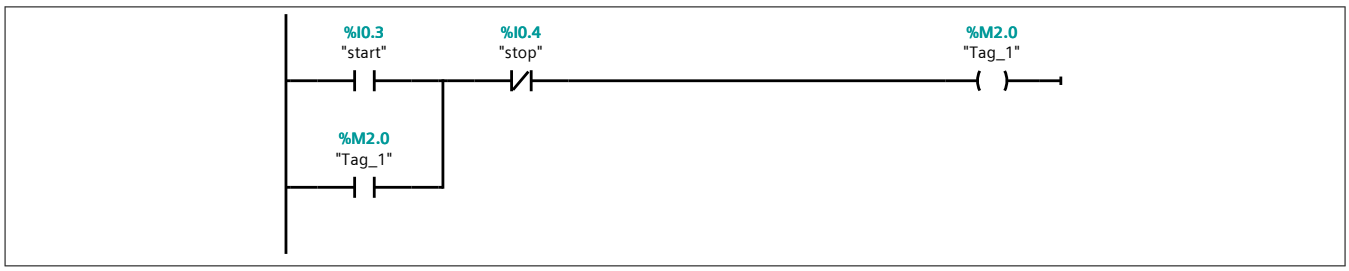

Network 2:

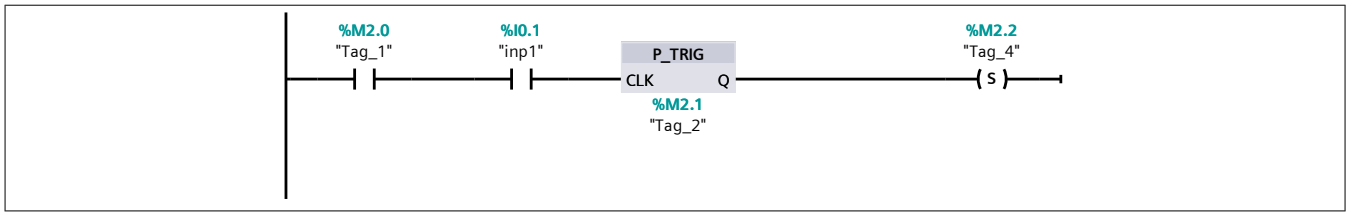

Network 3:

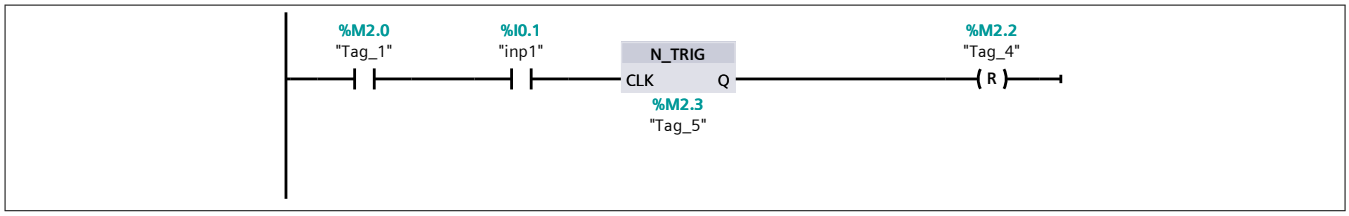

Network 4:

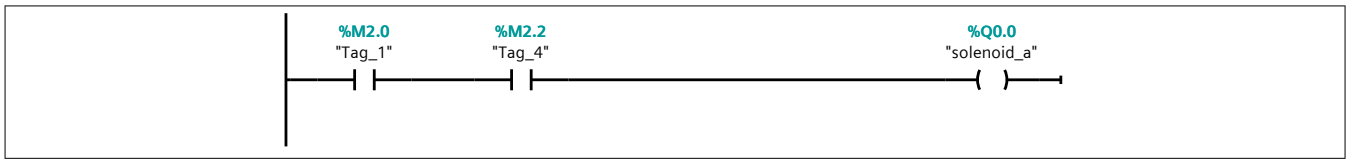

Network 5:

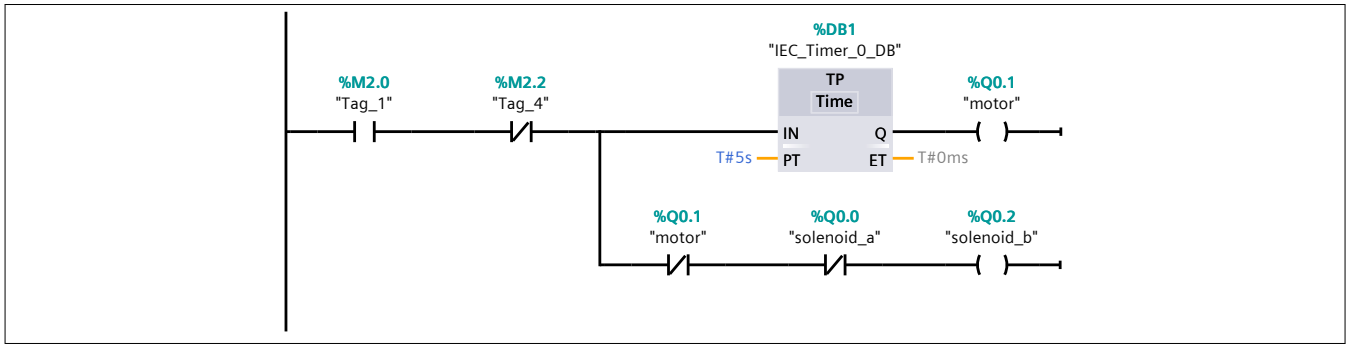

Project30 / PLC_1 [CPU 1215C DC/DC/DC] / Program blocks

Block_3 [FB2]

Block_3 Properties					
General					
Name	Block_3	**Number**	2	**Type**	FB
Language	FBD	**Numbering**	Automatic		
Information					
Title		**Author**		**Comment**	
Family		**Version**	0.1	**User-defined ID**	

Block_3

Name	Data type	Default value	Retain	Accessible from HMI/OPC UA/Web API	Writable from HMI/OPC UA/Web API	Visible in HMI engineering	Setpoint	Supervision	Comment
Input									
in1	Bool	false	Non-retain	True	True	True	False		
in2	Bool	false	Non-retain	True	True	True	False		
Input_2	Bool	false	Non-retain	True	True	True	False		
Output									
InOut									
motor	Bool	false	Non-retain	True	True	True	False		
Static									
Temp									
Constant									

Network 1:

Network 2:

Project31 / PLC_1 [CPU 1215C DC/DC/DC] / Program blocks

Main [OB1]

Main Properties					
General					
Name	Main	**Number**	1	**Type**	OB
Language	LAD	**Numbering**	Automatic		
Information					
Title	"Main Program Sweep (Cycle)"	**Author**		**Comment**	
Family		**Version**	0.1	**User-defined ID**	

Main			
Name	**Data type**	**Default value**	**Comment**
Input			
Initial_Call	Bool		Initial call of this OB
Remanence	Bool		=True, if remanent data are available
Temp			
Constant			

Network 1:

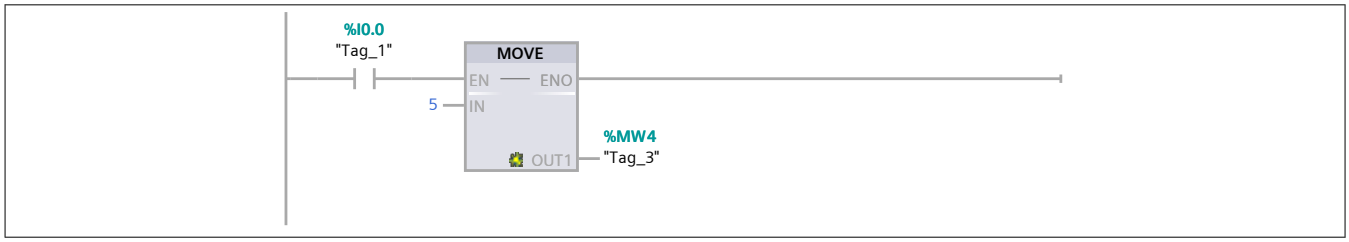

Network 2:

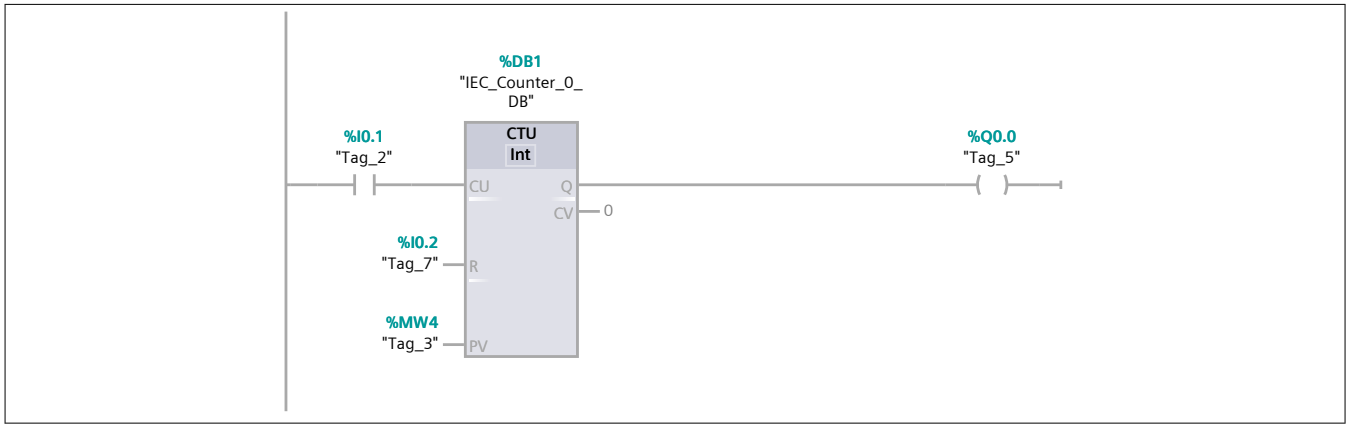

Network 3:

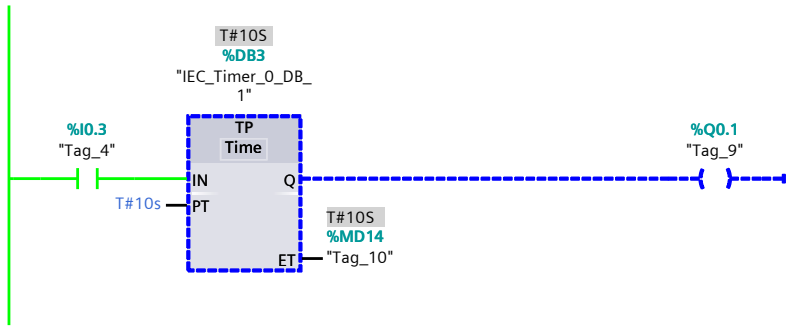
T#10S
%DB3
"IEC_Timer_0_DB_
1"
%I0.3
"Tag_4"
TP
Time
IN
Q
T#10s
PT
T#10S
%MD14
ET
"Tag_10"
%Q0.1
"Tag_9"

Network 4:

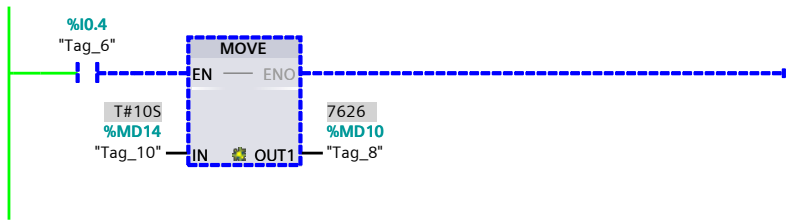
%I0.4
"Tag_6"
MOVE
EN
ENO
T#10S
%MD14
"Tag_10"
IN
OUT1
7626
%MD10
"Tag_8"

Project11137 / PLC_1 [CPU 1215C DC/DC/DC] / Program blocks

Main [OB1]

Main Properties					
General					
Name	Main	**Number**	1	**Type**	OB
Language	LAD	**Numbering**	Automatic		
Information					
Title	"Main Program Sweep (Cycle)"	**Author**		**Comment**	
Family		**Version**	0.1	**User-defined ID**	

Main			
Name	**Data type**	**Default value**	**Comment**
Input			
Initial_Call	Bool		Initial call of this OB
Remanence	Bool		=True, if remanent data are available
Temp			
Constant			

Network 1:

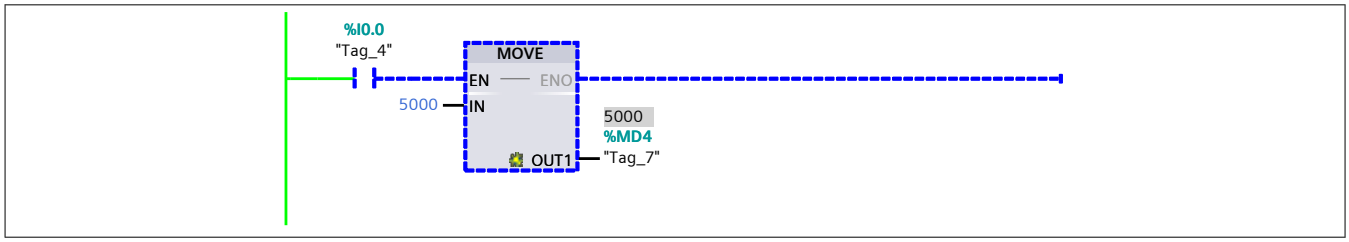
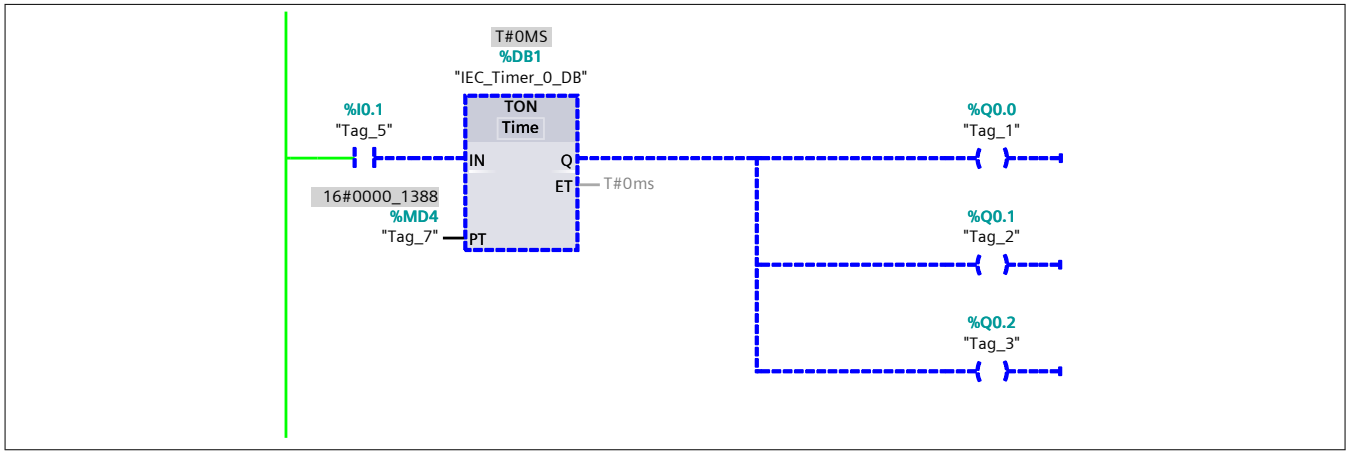
Network 2: