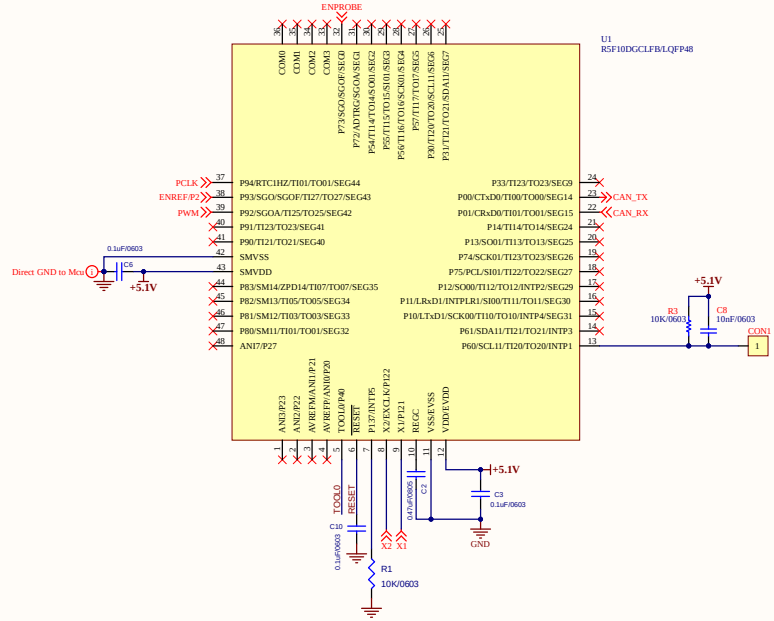

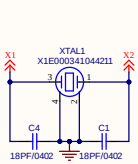

PROG PORT

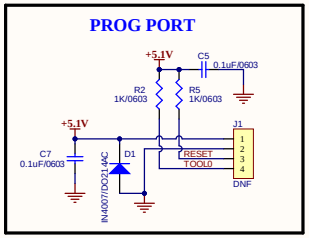

CAN

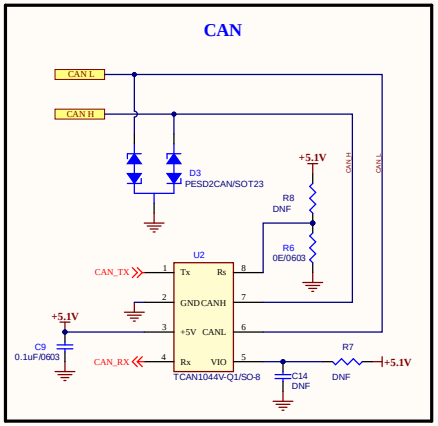

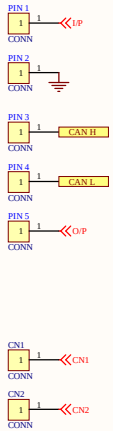

POWER SUPPLY

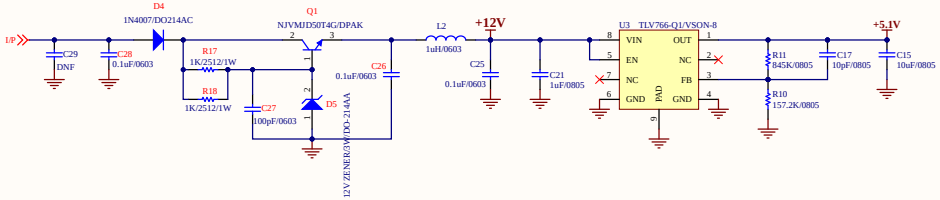

PROTECTED VOLTAGE SOURCE

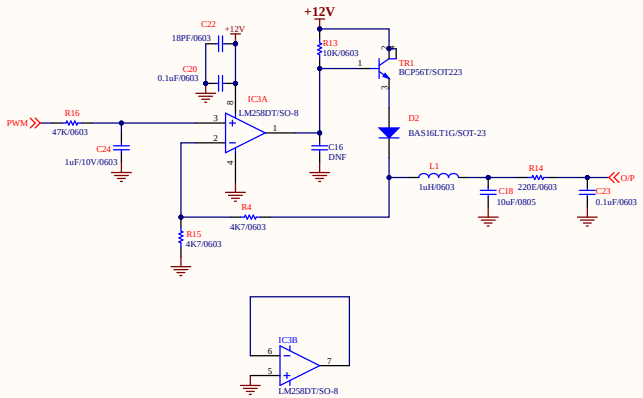

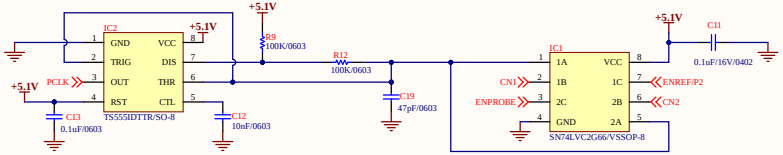

DATE	REVISION	CHANGES
21-10-19	R1	C21, C20 ADD L1, L4, CON 2 REMOVE, C8 PACKAGE INCREASE
		C14 REDUCE SIZE 0402, C7 CHANGED TO 18pF FROM 10pF
19-03-20	R2	CN1 & CN3 connection Interchange
29-08-20	R3	Via's are removed from pad of U1 and Q1
26-11-20	R4	Programming conn. CON1 removed, CON2 changed to single pin
14-09-21	R5	L3 removed, L6 replaced by R5
20-06-22	R6	U1 Part No. NCV4274CDT50RKG/DPAK Changed to Part No. TL431/SOIC-8 .
		Circuit added for TL431
04-08-22	R7	MCU replaced by Renasas MCU; CAN section added; TL431 section replaced by TLV766

Voothroo INDICATION INSTRUMENTS LTD

Title: CAPACITIVE FUEL SENSOR

PCB No.: PCB40.001R7	Rev : F
Reference: PCB40.00186	PCBR: PCBR40.001
Prepared by:Kawalpreet Kamboi	Date: 04/08/2022
Checked by:Nikita Malpani	Time: 15:05:53
Approved by: Amit Garg	Sheet No.: 1 of 1
Sheet Name:SCH40.00187.SchDoc	