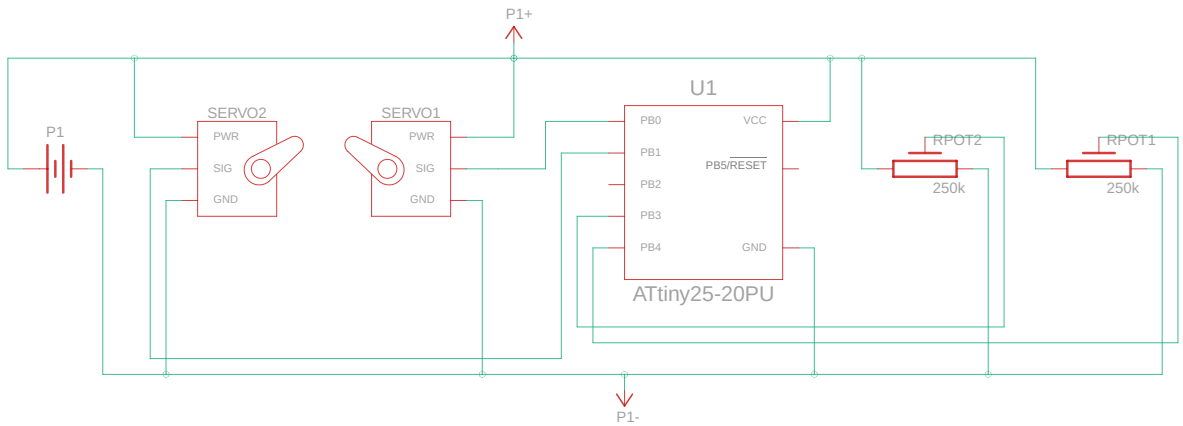

Made with Tinkercad®

Title: Servo_motor_control

Date: 6/29/2025, 9:28:04 PM

Sheet: 1/1