Vidyavardhini's College of Engineering and Technology

Department of Artificial Intelligence & Data Science

AY: 2025-26

Class:	**TE**	**Semester:**	**V**
Course Code:	**CSC502**	**Course Name:**	**WC**

Name of Student:	**Pranita Kumvhar**
Roll No. :	**70**
Experiment No.:	**08**
Title of the Experiment:	**To design and Simulate VLANs on the switch/router using Cisco packet tracer**
Date of Performance:	**17/09/25**
Date of Submission:	**24/09/25**

Evaluation

Performance Indicator	Max. Marks	Marks Obtained
Performance	5	
Understanding	5	
Journal work and timely submission	10	
Total	20	

Performance Indicator	Exceed Expectations (EE)	Meet Expectations (ME)	Below Expectations (BE)
Performance	4-5	2-3	1
Understanding	4-5	2-3	1
Journal work and timely submission	8-10	5-8	1-4

Checked by

Name of Faculty : Ms. Kshitija Gharat

Signature :

Date:

Aim: To create a network topology for simulating VLANs on the switch using Cisco packet tracer

Objective -

1. To create VLANs on the switch using cisco packet tracer
2. To configure the switch and test connectivity between hosts in different VLANs

Theory:

A Virtual LAN (VLAN) is simply a logical LAN. VLANs have similar characteristics with those of physical LANs, only that with VLANs, you can logically group hosts even if they are physically located on separate LAN segments.

Each VLAN can be considered as a separate subnet or broadcast domain. For this reason, to move packets from one VLAN to another, a router or a layer 3 switch is used.VLANs are configured on switches by placing some interfaces into one broadcast domain and some interfaces into another.

So then,

1. In Cisco Packet Tracer, create the network topology as shown below:

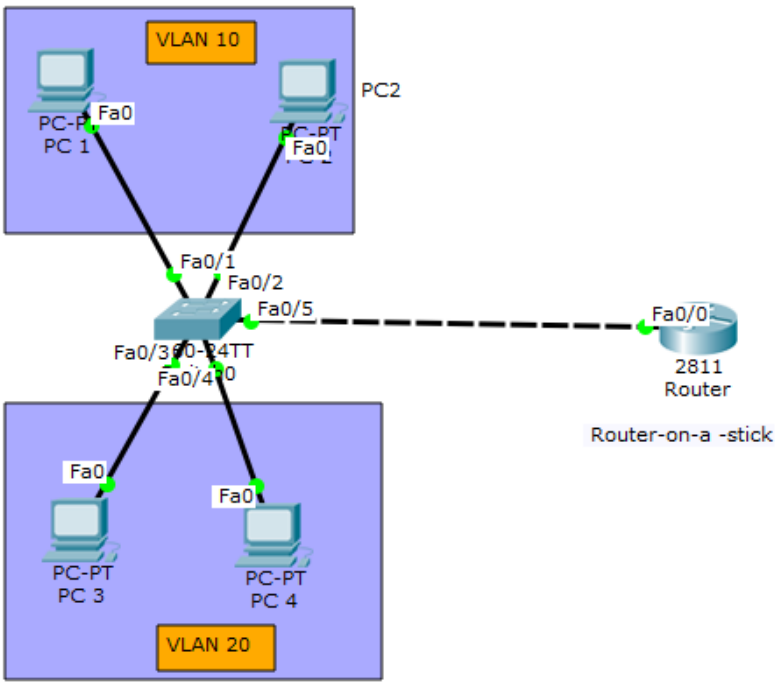

Advertisements

REPORT THIS AD

2. Create 2 VLANs on the switch: VLAN 10 and VLAN 20.

Switch#config terminal

Switch(config)#vlan 10

Switch(config-vlan)#name SALES

Switch(config-vlan)#vlan 20

Switch(config-vlan)#name IT

3. Assign switch ports to the VLANs. Remember each VLAN is viewed as separate broadcast domain. Switch ports could be either access or trunk.

- An *access port* is assigned to a single VLAN . These ports are configured for switch ports that connect to devices with a normal network card, for example a PC in a network.
- A *trunk port* on the other hand is a port that can be connected to another switch or router. This port can carry traffic from multiple VLANs.

For this topology, configure switch interfaces fa 0/1 through fa 0/4 as access ports to connect to our PCs. Here, interfaces fa 0/1 and fa 0/2 are assigned to VLAN 10 while interfaces fa 0/3 and fa 0/4 are assigned to VLAN 20.

Switch *Interface* fa0/5 will be configured as trunk port, as it will be used to carry traffic between the two VLANs via the router.

```
Switch>enable
Switch#config terminal

Switch(config)#int fa0/1
Switch(config-if)#switchport mode access
Switch(config-if)#switchport access vlan 10
Switch(config-if)#int fa0/2
Switch(config-if)#switchport mode access
Switch(config-if)#switchport access vlan 10
Switch(config-if)#int fa0/3
Switch(config-if)#switchport mode access
Switch(config-if)#switchport access vlan 20
Switch(config-if)#int fa0/4
```

Switch(config-if)#switchport mode access

Switch(config-if)#switchport access vlan 20

All the above interfaces can be configured as access ports using *interface range* command as shown below:

Switch(config-if)#int range fa0/1-4

Switch(config-if-range)#switchport mode access

In the above commands, an interface range is specified and then proceeded to configure all the ports specified as access ports.

Interface fa0/5 is configured as *trunk* and will be used to for inter-VLAN communication.

Switch(config)#int fa 0/5

Switch(config-if)#switchport mode trunk

The next thing is to:

4 . Assign static IP addresses to the four PCs which are located in the separate VLANs. PC1 and PC2 fall in VLAN 10 while PC3 and PC4 fall in VLAN 20.

PC1 IP address 192.168.1.10 Subnet mask 255.255.255.0 Default gateway 192.168.1.1

PC2: IP address 192.168.1.20 Subnet mask 255.255.255.0 Default gateway 192.168.1.1

PC3: IP address 192.168.2.10 Subnet mask 255.255.255.0 Default gateway 192.168.2.1

PC4: IP address 192.168.2.20 Subnet mask 255.255.255.0 Default gateway 192.168.2.1

VLAN is treated like a physical LAN when assigning IP addresses.

To test connectivity within VLANs and between VLANs

Test communication between hosts in the same VLAN:

Ping PC2 from PC1 both in VLAN 10. Ping test should be successful.

To test connectivity between hosts in different VLANs:

Ping PC3 in VLAN 20 from PC1 in VLAN 10. Ping here will definitely fail.

In order to allow the hosts in the two VLANs to communicate, configure the router to permit inter-

VLAN communication.

5. Configure inter-VLAN routing on the router

Ddivide the single physical interface on the router into logical interfaces (sub interfaces). Each sub-interface will then serve as a default gateway for each of the VLANs. This scenario is called router on a stick (R.O.A.S) and will allow the VLANs to communicate through the single physical interface.

Now, assign IP addresses to the sub interfaces.

Router configurations:

```
Router>enable
Router#config terminal
Router(config)#int fa0/0
Router(config-if)#no shutdown
Router(config-if)#int fa0/0.10
Router(config-subif)#encapsulation dot1q 10
Router(config-subif)#ip add 192.168.1.1 255.255.255.0
Router(config-subif)#
Router(config-subif)#int fa0/0.20
Router(config-subif)#encapsulation dot1q 20
Router(config-subif)#ip add 192.168.2.1 255.255.255.0
```

The routers physical interface fa0/0 was subdivided into two sub-interfaces(fa0/0.10 and fa0/0.20) , which are then configured as *trunk* interfaces and given IP addresses.

Finally,

6. Test inter-VLAN connectivity.

Test connectivity between computers in different VLANs . Don't forget that its the router that enables inter-VLAN routing.

Ping PC3 in VLAN 20 from PC1 in VLAN 10. If everything is well configured, then ping should work

perfectly.

Output -

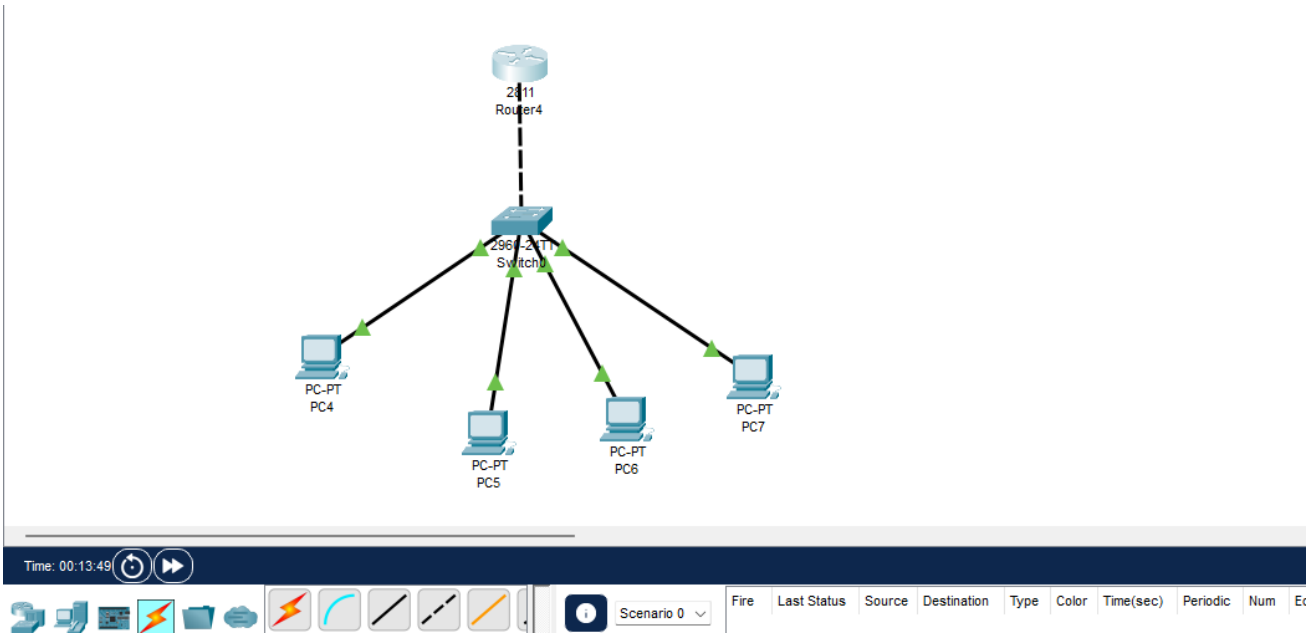

Conclusion - Virtual LAN(VLAN) is a logical LAN which can logically connect host even if they are connected on different physical LAN. Therefore, a switch or a router needs to be configured for connectivity within VLAN and inter-VLANs.