PFAS Interfacial Package
Technical Development and Reproducibility Report

Repository: `Prasanna163/PFAS-Interfacial-Package`

Generated on 2026-03-24

Contents

1 Executive Summary **2**

2 Repository Snapshot **2**

2.1 Top-level Structure 2

2.2 Package Modules and Responsibilities 3

3 Development History and Change Log **4**

3.1 Chronological Commit Timeline 4

3.2 Impact of the Two Major Refactors 4

4 End-to-End Computational Workflow **6**

4.1 Operational Pipeline 6

4.2 Step-by-Step Execution 6

4.3 Run Directory Contract 7

5 Mathematical and Methodological Core **8**

5.1 Placement Transform 8

5.2 Energy Definitions 8

5.3 KNF Context and Descriptor Flow 8

6 CLI Interfaces and Arguments **9**

6.1 Primary Commands 9

6.2 Argument Layers 9

6.3 Observed Default Mismatch (Important) 9

7 Mapping to Manuscript Methodology **9**

7.1 Directly Implemented in Repository 9

7.2 Manuscript Details Referenced in This Report 10

8 Sample Calculations (Manuscript-Aligned) **10**
8.1 Energy Unit Conversion 10
8.2 Orientation Interpretation Examples 10

9 Known Limitations and Risk Register **11**

10 Operational Reproduction Guide **11**
10.1 Environment Prerequisites 11
10.2 Single-Molecule Production Run 11
10.3 Batch Directory Run 11
10.4 Expected Primary Outputs 11

11 Conclusion **12**

1 Executive Summary

This report documents the current production codebase, its full workflow mechanics, and its development history up to commit `8787cbd` (2026-03-24). It is written as a reproducibility and handover document for re-running the PFAS interfacial study after data loss.

Core outcomes of this report are:

1. A complete technical walkthrough of the repository modules, CLI interfaces, data flow, and outputs.
2. A commit-level development timeline from initial package creation through `improvements-v1` and `V2` modularization.
3. Manuscript-aligned methodology mapping (including dual-orientation workflow and KNF context logic).
4. Sample calculations from manuscript-reported values, included in reproducible formula form.
5. A limitations and risk register focused on immediate reproducibility and next implementation priorities.

2 Repository Snapshot

2.1 Top-level Structure

Current repository layout (main branch):

- `pfas_interface_cli/`: production Python package
- `run_pfas_interface_knf.py`: compatibility shim
- `references/`: canonical slab files
- `examples/`: sample slab files
- `tools/`: utility scripts and analysis helpers
- `docs/manuscript.pdf`: manuscript used as methodological basis

2.2 Package Modules and Responsibilities

Table 1: Current modular architecture in `pfas_interface_cli`

Module	Responsibility
`cli.py`	User-facing command `PFAS`; default slab resolution; single-file and directory batch dispatch into workflow.
`workflow.py`	End-to-end orchestration: slab sort, xTB runs, orientation branches, KNF runs, analysis, report generation.
`geometry.py`	XYZ parsing/writing, bounds/centroid math, rotation matrix generation, slab O-H-H z-sorting.
`placement.py`	Head-tail axis inference, perpendicular/parallel orientation transform, slab-relative translation and merge.
`xtb.py`	xTB command execution and optimized energy parsing from `xtbopt.xyz`.
`knf.py`	KNF pipeline invocation on pre-optimized structures (no KNF-side geometry optimization).
`analysis.py`	Interface geometric diagnostics, closest-contact detection, KNF metric extraction and delta logic.
`reporting.py`	Human-readable summary table rendering and report text assembly.

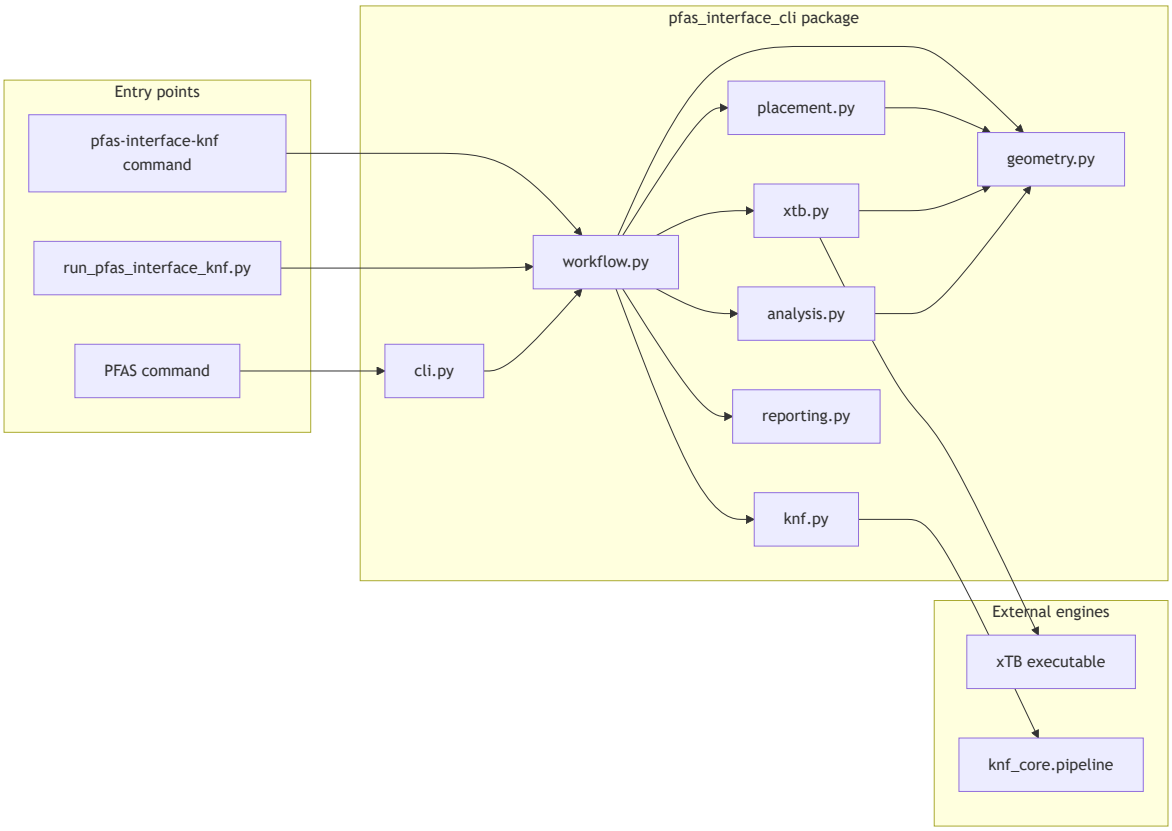

Figure 1: Module dependency and external engine interfaces (Mermaid rendered to PDF).

3 Development History and Change Log

3.1 Chronological Commit Timeline

Table 2: Main development milestones

Commit	Date	Summary
`3e8a5ca`	2026-03-03	Initial commit (license scaffolding).
`9c3d150`	2026-03-03	Initial PFAS interfacial package with monolithic workflow script and helper scripts.
`698ee3a`	2026-03-03	Merge sync with remote main.
`5c1bdfa`	2026-03-24	Major refactor: dual-orientation pipeline, CLI workflow improvements, repository reorganization into `examples/`, `references/`, `tools/`.
`67b4c17`	2026-03-24	Merge of `improvements-v1` into `main`.
`38f3d3e`	2026-03-24	V2 modularization into `geometry`, `xtb`, `placement`, `analysis`, `reporting`, `workflow`, `knf`.
`8787cbd`	2026-03-24	Merge of `V2` into `main`.

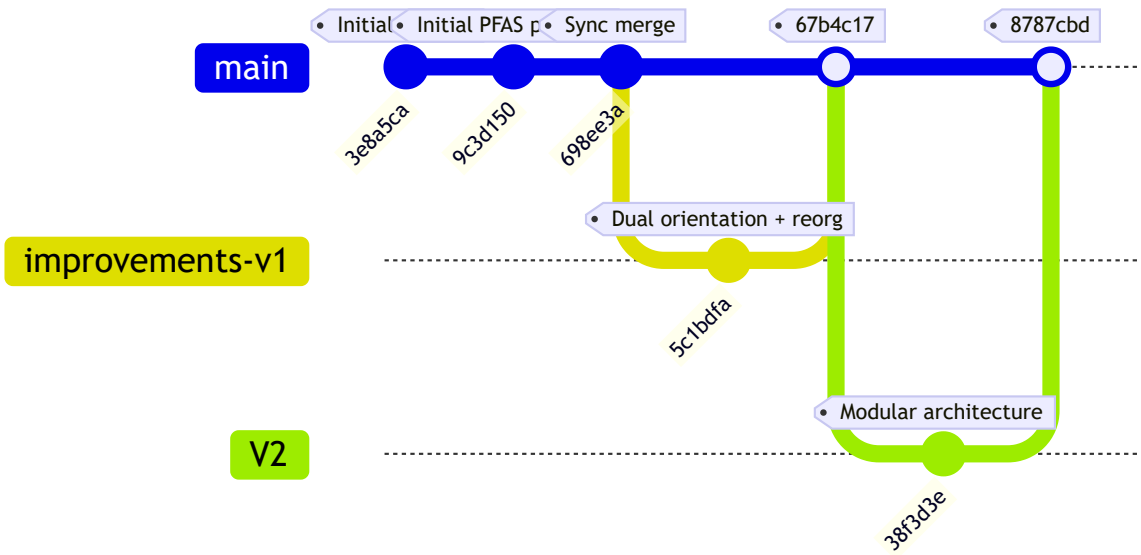

Figure 2: Repository branch and merge evolution (Mermaid gitGraph rendered to PDF).

3.2 Impact of the Two Major Refactors

Refactor 1 (`5c1bdfa`):

- Brought dual-orientation execution into the main production path.
- Introduced cleaner repository layout and retained manuscript within `docs/`.
- Established stronger CLI usage patterns for single molecule and batch directory runs.

Refactor 2 (`38f3d3e`):

- Split monolithic script into composable modules.
- Improved maintainability and testability by separating geometry/math, orchestration, analysis, and reporting.
- Kept backward compatibility through `run_pfas_interface_knf.py` shim.

4 End-to-End Computational Workflow

4.1 Operational Pipeline

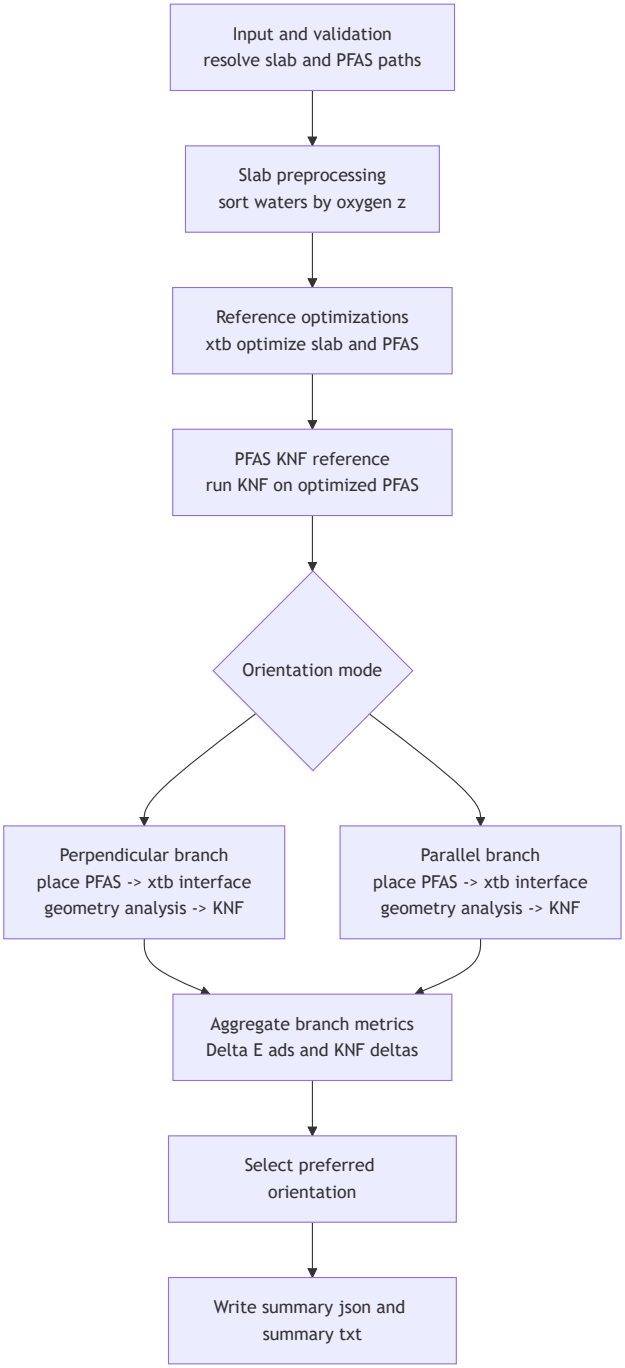

Figure 3: Production workflow from input ingestion to orientation selection and final summaries.

4.2 Step-by-Step Execution

For each PFAS molecule, workflow execution in `workflow.py` is:

1. Validate slab and PFAS inputs.

2. Create deterministic run directory and step subfolders.
3. Sort slab waters by oxygen z-order (expects O-H-H triplets).
4. xTB optimize slab.
5. xTB optimize PFAS.
6. Run KNF on optimized PFAS (gas-like context used by current workflow).
7. For each orientation branch (perpendicular, parallel):
   - infer axis, rotate and place PFAS above slab,
   - optimize interface with xTB,
   - run geometry diagnostics,
   - run KNF on optimized interface,
   - compute KNF metric shifts versus PFAS reference.
8. Compute adsorption energy for each branch and pick preferred orientation by minimum ΔE_{ads}.
9. Emit machine-readable `summary.json` and human-readable `summary.txt`.

4.3 Run Directory Contract

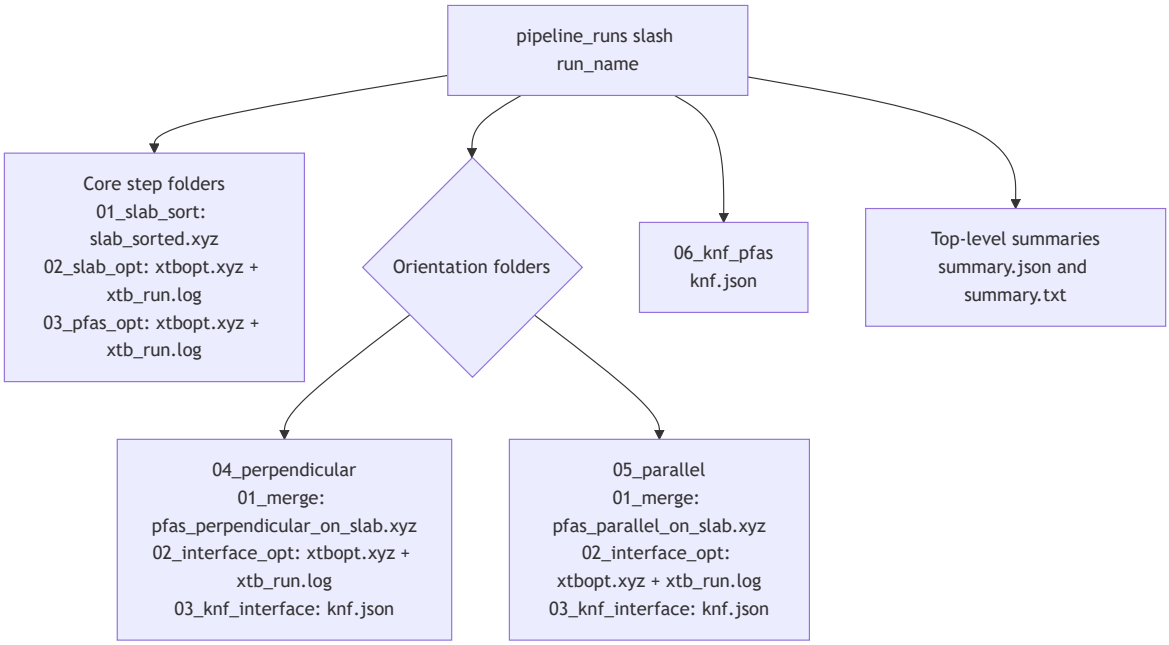

Figure 4: Expected per-run artifact layout and orientation branch output structure.

5 Mathematical and Methodological Core

5.1 Placement Transform

PFAS placement above slab is computed by translation:

$$\Delta x = x_{slab}^{center} - x_{pfas}^{ref} + x_{shift}, \tag{1}$$

$$\Delta y = y_{slab}^{center} - y_{pfas}^{ref} + y_{shift}, \tag{2}$$

$$\Delta z = (z_{slab}^{max} + g) - z_{pfas}^{anchor}. \tag{3}$$

Current production default in `workflow.py` is $g = 1.5\,\text{Å}$.

5.2 Energy Definitions

The workflow uses standard adsorption decomposition:

$$\Delta E_{ads,o} = E_{interface,o} - E_{slab} - E_{PFAS}, \quad o \in \{\perp, \|\} \tag{4}$$

Orientation anisotropy:

$$\Delta\Delta E = \Delta E_{\|} - \Delta E_{\perp} \tag{5}$$

Interpretation:

- $\Delta\Delta E > 0$: perpendicular favored.
- $\Delta\Delta E < 0$: parallel favored.
- $|\Delta\Delta E| \lesssim 15\,\text{kJ}\,\text{mol}^{-1}$: orientation-indifferent zone (manuscript criterion).

5.3 KNF Context and Descriptor Flow

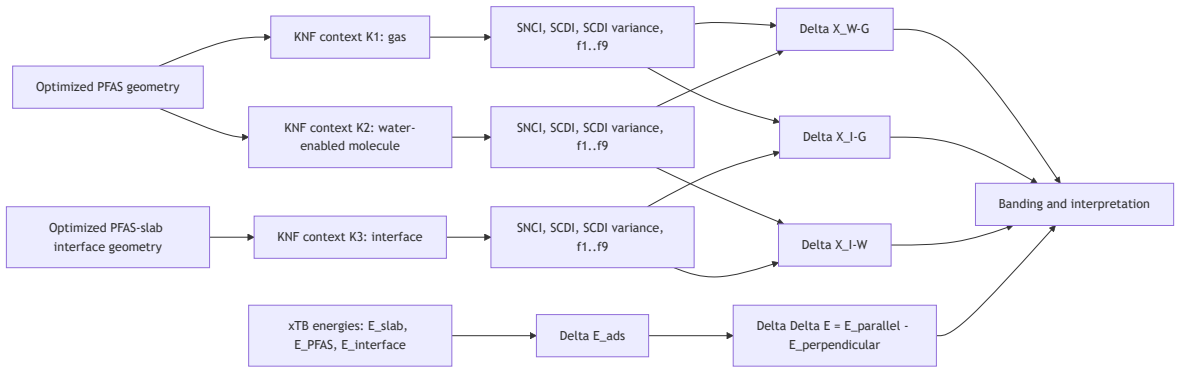

Figure 5: Descriptor pathway from xTB structures to KNF vectors/scalars and delta features.

Manuscript methodology defines three KNF contexts (gas, water-enabled molecule, interface). Current code computes PFAS and interface KNF in pipeline form and stores KNF vector/scalar outputs for shift analysis.

6 CLI Interfaces and Arguments

6.1 Primary Commands

- `PFAS <input_file_or_directory>` (user-facing production command)
- `pfas-interface-knf <slab.xyz> <pfas.xyz>` (explicit workflow command)

6.2 Argument Layers

Essential layer (typical user path):

- input PFAS file or directory,
- optional `--slab`,
- optional `--pfas-charge`.

Advanced layer (reproducibility and sweeps):

- `--run-root`, `--run-name`
- `--gap`, `--x-shift`, `--y-shift`
- `--orientation-mode` (`dual|perpendicular|parallel`)
- `--multiplicity`, `--gfn`
- `--contact-elements`
- `--keep-knf-intermediates`
- `--knf-scdi-var-min`, `--knf-scdi-var-max`

6.3 Observed Default Mismatch (Important)

Current code has a noteworthy mismatch:

- `workflow.py` default `--gap` = `1.5`
- `cli.py` default `--gap` = `2.5`

For strict reproducibility, pass `--gap` explicitly until these defaults are unified.

7 Mapping to Manuscript Methodology

7.1 Directly Implemented in Repository

- Dual-orientation branch generation (perpendicular and parallel).
- xTB optimization of slab, PFAS, and each interface branch.
- Adsorption-energy decomposition and orientation selection.
- Geometry diagnostics (z-extents, contact distance, placement class logic).
- KNF post-processing on optimized PFAS and optimized interface geometries.

7.2 Manuscript Details Referenced in This Report

Values used from `docs/manuscript.pdf` include:

- Dataset size and diversity: 88 compounds across 15 families.
- Canonical slab model: 96 waters (288 atoms), area 12.72 Å x 11.64 Å, thickness 19.03 Å, apparent density 1.018 g cm^{-3}.
- Five-band SNCI framework: Band I (¡800), II (800–830), III (830–860), IV (860–890), V (¿890).
- Reported orientation anisotropy range: $-447.3\,\mathrm{kJ\,mol^{-1}}$ to $216.8\,\mathrm{kJ\,mol^{-1}}$.

8 Sample Calculations (Manuscript-Aligned)

8.1 Energy Unit Conversion

Manuscript uses $1\,\mathrm{Eh} = 2625.5\,\mathrm{kJ\,mol^{-1}}$. Converting representative $\Delta\Delta E$:

$$\Delta\Delta E_{PFOA} = +6.7\,\mathrm{kJ\,mol^{-1}} = +0.002552\,\mathrm{Eh} \tag{6}$$

$$\Delta\Delta E_{PFOS} = +216.8\,\mathrm{kJ\,mol^{-1}} = +0.082575\,\mathrm{Eh} \tag{7}$$

$$\Delta\Delta E_{PIN04} = -447.3\,\mathrm{kJ\,mol^{-1}} = -0.170368\,\mathrm{Eh} \tag{8}$$

8.2 Orientation Interpretation Examples

Table 3: Representative orientation interpretation using manuscript values

Compound	Reported $\Delta\Delta E$	Interpretation
PFOA	+6.7 kJ mol^{-1}	Orientation-indifferent regime (close energetic competition between parallel and perpendicular).
PFOS	+216.8 kJ mol^{-1}	Strong perpendicular preference; high anisotropy and robust orientation lock.
PIN04	-447.3 kJ mol^{-1}	Extreme parallel preference; orientation dominated by strong branch asymmetry.

9 Known Limitations and Risk Register

Table 4: Current limitations relevant to reproducibility and scale-up

Area	Current limitation	Practical impact
Defaults consistency	`--gap` mismatch between `cli.py` and `workflow.py`.	Runs launched through different entry points may not match unless `--gap` is explicit.
Input assumptions	Slab sorter requires strict O-H-H ordering and atom count divisible by 3.	Non-canonical slab files can fail early.
xTB dependency	Requires external `xtb` executable in `PATH`.	Environment setup failure blocks all optimization stages.
KNF dependency	Requires functioning `knf_core.pipeline`.	KNF stage unavailable if local KNF environment is broken.
Error resilience	No full batch resume database in current CLI path.	Interrupted large campaigns may need partial reruns depending on run state.
Finite slab geometry	Canonical finite slab can underrepresent long-chain lateral contact in some parallel poses (manuscript-noted).	Potential bias for very long PFAS in edge placement configurations.

10 Operational Reproduction Guide

10.1 Environment Prerequisites

- Python ¿= 3.10
- xTB executable available on `PATH`
- KNF package installed and importable (`knf_core.pipeline`)
- This repository installed in editable mode:

```
python -m pip install -e .
```

10.2 Single-Molecule Production Run

```
PFAS .\molecules\PFOA.xyz --pfas-charge -1 --gap 1.5 --orientation-mode dual
```

10.3 Batch Directory Run

```
PFAS .\molecules --pfas-charge -1 --gap 1.5 --run-root .\pipeline_runs
```

10.4 Expected Primary Outputs

- `summary.json`: full machine-readable run payload

- `summary.txt`: human-readable report
- Orientation-specific interface `xtbopt.xyz` and `knf.json`
- PFAS KNF reference `knf.json`

11 Conclusion

The repository has evolved from a strong proof-of-concept monolith into a modular production-ready workflow with clear separation of concerns. It already encodes the critical dual-orientation interfacial methodology, xTB/KNF coupling, and report-generation path needed to reproduce the study logic in `docs/manuscript.pdf`. The immediate path to highly reliable re-production is to standardize defaults (especially gap), add explicit batch resume bookkeeping, and add test coverage around slab parsing, orientation transforms, and summary schema stability.

Primary Internal Sources

- Repository history: `git log` up to `8787cbd`
- Code modules under `pfas_interface_cli/`
- Manuscript: `docs/manuscript.pdf`