KAHRAMAA
كهرماء
المؤسسة العامة القطرية للكهرباء والماء
Qatar General Electricity & Water Corporation

CONTRACT No GTC 626/2014A

CONSTRUCTION OF MEGA RESERVOIR PRPSs
(PACKAGE A - UMM BIRKA)

CONTRACT DOCUMENTS
(VOLUME 16 OF 19)

CONSOLIDATED CONTRACTORS GROUP S.A.L. (OFFSHORE) (CCC) &
TEYSEER CONTRACTING COMPANY W.L.L.
JOINT VENTURE

TABLE OF CONTENTS

VOLUME	SECTION	ITEM
VOLUME 1	1	Contract Agreement
	2	Letter of Award
	3	Letter of Confirmation
	4	Secrecy Declaration
	5	Performance Bond
	6	Commercial Registration and Power of Attorney
	7	Summary of Contract
	8	General Conditions of Contracts
VOLUME 2/6	9	Appendix A: Scope of Work and Specifications
VOLUME 7	10	Appendix B: Schedule of Prices
		1. Form of Tender
		2. Preamble
		3. Bills of Quantities
		• Contract BOQ (After Currency Adjustment)
	11	Appendix C: Insurance
		1. Preamble
		2. All Risk Insurance
		3. Workmen's Compensation Insurance
	12	Appendix D Administration Instructions
VOLUME 8	13	Appendix E Contractor Resources
		Annexure 1: Contractor's Personnel
		Annexure 2: Facilities, Plant & Equipment owned by Contractor
		Annexure 3: Facilities, Plant & Equipment proposed by Contractor
		Annexure 4: Subcontractors
		Annexure 5: Suppliers
		Annexure 6: Contractor's Company Organization Chart
		Annexure 7: Contractor's Project Organization Chart
		Annexure 8: QA/QC Procedure
VOLUME 9	13	Annexure 9: Utilization of National Products & National Origin
		Annexure 10: Contractor's General Information
		Annexure 11: List of Customers and Projects
		Annexure 12: List of Current Commitment
VOLUME10	14	Appendix F Drawings
	15	Appendix G Material Equipment Supplied by KAHRAMAA
	16	Appendix H Contract Execution Plan
		1. Programme of Work
		2. Method Statement
VOLUME 11/15	17	Appendix I Materials Supplied by the Contractor
VOLUME 16 16/17	**18**	**Appendix J General Safety Requirements**
	19	**Appendix K Departure from or Qualification to the Specification**
VOLUME 18	20	Acknowledgement of Receipt of Tender Documents
		Circulars No. 1 to 21
VOLUME 19	21	Commercial Offer BOQ
		Pre Award Correspondence
		Minutes of Pre-Award Meeting

SECTION 18: APPENDIX J
GENERAL SAFETY REQUIREMENTS

KAHRAMAA الهيئة العامة القطرية للكهرباء والماء
Qatar General Electricity & Water Corporation

Form-1

Health, Safety and Environment Department

Incident Report

Date Reported:

Case and injury Information

Occurrence Cost Center:	Occurrence Location:	Date & time of Incident:
----------	----------	Date:----/----/------Time:-------Hrs.

Individual Category:	Individual's Name:	Staff No.:	Job Title:	Department:
Kahramaa Staff ☐	----------	----------	----------	----------
Contractor Staff ☐	----------		----------	----------
Customer ☐				

Case Type:	Incident Type:	Injury or Illness type:
Occupational Illness ☐	Motor Vehicle ☐	Cuts or bruises ☐
Incident With injury ☐	Fire / Explosion ☐	Burn ☐
Incident Without Injury ☐	Electrical ☐	Electrical shock ☐
Near Miss ☐	Other:----------	Other:----------

Severity:	Effected Part of the body:	No. of days away from work:
Fatal ☐	Hands ☐	
Major ☐	Legs ☐	No. of days restricted work activity:
Minor ☐	Other:----------	
	----------	Date returned to work:----/----/--------, Date Deceased:----/----/-------

Incident Description and Analysis

Recommendations

	Action By:	Position:	Date:
----------	----------	----------	----------
----------	----------	----------	----------
----------	----------	----------	----------
----------	----------	----------	----------
----------	----------	----------	----------

Medical Details

Witnesses

Name	Position	Signature	Date
1- ----------	----------	----------	----------
2- ----------	----------	----------	----------
3- ----------	----------	----------	----------
4- ----------	----------	----------	----------

Investigation Details

Investigated & Reported By:

Name	Position	Signature	Date
1- ----------	----------	----------	----------
2- ----------	----------	----------	----------
3- ----------	----------	----------	----------
4- ----------	----------	----------	----------

Report Accepted By:

Name	Position	Signature	Date
1- ----------	----------	----------	----------
2- ----------	----------	----------	----------

Costs:

Medical:---------- Compensation:---------- Other:----------Total Cost:--------

- Attached Material Enclosed: Yes No
- To: Department Manager.
- To: HSE Manager.

Form-2

Incident report Form attachment sheet

HSE-P12/F2	Issue:0	14/10/2004

HSE-M1-P1

INTRODUCTION to HSE MANUAL AND PROCEDURE

Introduction

Department	Document Type	Document Title
HSE	INTRODUCTION H S E MANUAL AND PROCEDURE	INTRODUCTION to H S E MANUAL AND PROCEDURE

Issue Approval	
Prepared By	**Approved By**
Bahaa Eddin Weld Ali *Sr. Safety Engineer*	Dr. Mohammad Al-Sulaiti *Manager, HSE*
Signature:	**Signature:**

Issue Record

Issue No.	Date	Reason for re-issuing Procedure
0.0	14/10/2004	First issue of the Procedure.
1.0		
2.0		
3.0		
4.0		
5.0		

Review Frequency : Yearly.

Table of Contents

Contents	Page
Title Page	1
Document Control & Issue Record Page	2
Table of Contents	3
Purpose	4
Scope	4
Responsibilities & Authorities	4
Abbreviations & Terminologies	5
General	6
Future Roadmap	6
Proposed Changes	6
PROPOSED CHANGES FORM	7
Records / Retention Time / Appendix	8

Form

PROPOSED CHANGES FORM- -1

1. Purpose

The purpose of HSE manual is to be used by KM employees and contractors other who may be concerned in any way with operation or work of the corporation, its property or premises.

2. Scope

The intention of the HSE Manual is to provide a means of:

- Set Corporation standard.
- Implement mandatory HSE requirements;
- Implement work guidelines and cod of practice;
- Disseminate and record HSE information and experience;
- Form the basis of HSE specifications for inspection and HSE Audit .
- Future partial changes and amendments to individual parts will be routed accordingly for suggestions and comments, and then approved and signed by the Health, Safety & Environment Manager.

3. Responsibilities & Authorities

- The Table of Contents, listing all current parts, is signed by the HSE Manager authorizing the contents and indicating the effective date of implementation.

- Future partial changes and amendments to individual parts will be routed accordingly for suggestions and comments, and then approved and signed by the Health, Safety & Environment Manager.

4) Abbreviations & Terminologies

HSE : Health, Safety & Environment
HSEMS : Health, Safety and Environment Management System

HSE MANUL	It is a document contains administrative and technical information, policies, procedures, instructions, specifications, standards, and definitions concerning Health, Safety and Environment issues.

5) General

- The current HSE Manual is a live and controlled document. It contains administrative and technical information, policies, procedures and definitions – concerning Health, Safety and Environment Issues.
- The current contents of the HSE Manual are being followed by KAHRAMAA Employees and Contractors to ensure safe operations and compatibility with KAHRAMAA adopted HSE Codes and Standards.
- The continuous review and evaluation of HSE Manual contents are on track for ensuring consistency and compatibility with KAHRAMAA Health, Safety and Environment Management System (HSEMS)

6) FUTURE ROADMAP

- To maintain the quality of the Manual, planning for future structural changes will be proposed to include, but not limited to, chapters structure, parts grouping, new numbering system, additional chapters for forms and attachments, etc.
- The new flow and sequence will support the future cross reference issue.

7) PROPOSED CHANGES

- All areas are encouraged to utilize the "Change Proposal Form", Part 1, Attachment A, in order to present their constructive concerns and suggestions on HSE Manual Issues.

Form-1

Healthy, Safety & Environment Department

PROPOSED CHANGES FORM

Registered Document Holder :

No.: .....

Area : .....

Name :	**Job Code No. :**
Dept./Section :	**Area :**
Comments :	
Proposed Change :	

Complete by stating your comments and proposed changes and attach available relevant and supportive references (if any) then:

Forward to→: Health, Safety & Environment Manage

HSE-P1/F1	Issue:0.	14/10/2004

Records	Retention Time
PROPOSED CHANGES FORM HSE-P1/F1	1 Year

Appendix

HSE-M1-P2

PROCEDURE FOR INVESTIGATION AND FOLLOW UP OF INCIDENTS

PROCEDURE FOR INVESTIGATION AND FOLLOW UP OF INCIDENTS

Department	Document Type	Document Title
HSE	Manual	PROCEDURE FOR INVESTIGATION AND FOLLOW UP OF INCIDENTS

Issue Approval	
Prepared By	**Approved By**
Bahaa Eddin Weld Ali *Sr.Safety Engineer*	Dr. Mohammad Al-Sulaiti *Manager, HSE*
Signature:	**Signature:**

Issue Record

Issue No.	Date	Reason for re-issuing Procedure
0.0	**14/10/2004**	First issue of the Procedure.
1.0		
2.0		
3.0		
4.0		
5.0		

Review Frequency : Yearly.

Table of Contents

Contents	Page
Title Page	1
Document Control & Issue Record Page	2
Table of Contents	3
Purpose	4
Scope	4
Responsibilities and Authorities3	4
Abbreviations & Terminologies	5-6-7
Investigation Teams	7
Terms of Reference	7
Incident reporting Form	7
Follow-up of recommendations	8
Instructions on completing a Kahramaa incident investigation report form	10
Incident Reporting Form	11
Records and appendix	12

Form

Incident Report -1

Incident report Form attachment sheet -2

1. Purpose

The purpose of the following procedures is to provide a consistent method of collecting and reporting incident data throughout Kahramaa.

2. Scope

Any incident occurring during Kahramaa business activities, or at Kahramaa premises involving Kahramaa employees, Contractors, or the general public shall be reported using these procedures

4. Responsibilities and Authorities

All Kahramaa Employees are listed in the following points; every individual is responsible to act as stated in the following points:

A-All Employees To report (Verbally) to line supervisors.

B-Line Supervisor To report to line management.

C-Line management To report to department manager.

D-Dept. Manager

1- In case of no fatality or high loss in property:
Complete an accident report form and send it within 48 hours to HSE manager.

2- In case of fatality or high loss in property:

A- Fatality Case:

Inform verbally as soon as practical the VC.

B- High Loss Case:

Inform verbally as soon as practical the VC, and initiate an investigation team based on HSE Manual (Part 2: Procedure of incidents and follow-up of incidents)

E-VC In the case of fatality: initiate an investigation team based on HSE Manual (Part 2: Procedure of incidents and follow-up of incidents)

F-Investigation Team

1- Fatality Case:

1- Perform the investigation
2-Inform the BOD within 24hrs
3-Issue a preliminary report
4-Complete an accident report form and send it to HSE manager

2- High Loss Case:

1-Perform the investigation,
2-Complete an accident report form and send it to HSE manager.

G- Health, Safety & Environment Dept

Up on receipt of an incident, investigation report, etc. it is the responsibility of the HSED to perform the following four tasks in addition to providing necessary advice and assistance to facilitate effective incident investigation.

3. Abbreviations and Terminologies

VC : Vice Chairman
BOD : Board Of Directors
LTI Lost Time Injury
TRC Total Recordable Cases

Term	Description
Incident	An incident is unplanned event or chain of events that has or could have caused injury, illness and/or damage (loss) to people, assets, the environment, third part of reputation. Such an event may also involve any non-routine loss of containment, or interruption of work.
Accident	An accident is an incident, but the word accident is only used in connection with fatalities/deaths.
Fatality	Fatality is a death resulting from an injury or illness, regardless of the time intervening between injury and death.
Near Miss	A near mess is an incident which potentially could have caused injury or occupational illness and/or damage (loss) to people, assets, the environment, third party or reputation, but which did not.
Occupational Illness	Any work related to abnormal condition or disorder of an employee, other than one resulting from an occupational injury, caused by exposure to environmental factors associated with employment. It includes acute and chronic illness or disease, which may be caused by inhalation, absorption, ingestion or direct contact.
Individual category	The individual category indicates whether the individual involved with the incident is an employee, a customer or a contractor
Case Type	The nature of the case. Is it an Occupational Illness, Incident With injury Incident Without Injury, or a Near Miss case?
Incident Type	The nature of the incident for example, car accidents, electrical shocks, explosions, etc.
Injury or Illness Type	The type of the injury or illness that has resulted from this incident
Preliminary Report	An Incident Report containing the available information at incident occurrence time.
No. of days of restricted work activity	The number of days that the individual will not be able to perform his usual task or another specific task once returned back to work.
Date deceased	The date in which the individual died (in case of a fatal incident)
Kahramaa Employee	A direct hire, or a permanent/temporary or direct contractor filling an established position within Kahramaa manpower organization.

Contractor employee	Any employee of a contractor performing services to Kahramaa under a contract either written or implied but who is not defined as a Kahramaa employee.
Line supervisor	A senior employee (of at least job grade 7 and above) performing a particular assignment.
Line management	HSED; Health, Safety & Environment Department. SSE; Senior Safety Engineer. Line Supervisor: A senior employee performing a particular assignment Divisional manager: All Managers and Heads of autonomous department.
Lost Working Day Case (LWC)	Any work injury other than a permanent partial disability which renders the injured person temporarily unable to perform any regular job or restricted work on any day after the day on which the injury was received. In this case " any day" includes rest day, weekend day, scheduled holiday, public holiday or subsequent day after ceasing employment.
Medical Treatment Case (MTC)	A medical treatment case is any work-related injury that involves neither lost working days nor restricted working days but which requires treatment by , or under the specific order of , a physician or could be considered as being in the province of a physician.
Multiple LTI	Any incident that involves more than one LTI. For example, an incident results in two people away from work for one or more days each counts as two LTI'S.
Permit to work (PTW)	Is a permit authorized / issued by an area authority / issuing authority to allow work to be performed safety on a particular area
Permanent Partial disability (PPD)	Permanent partial disability is any work related injury which results in the complete loss, or permanent loss of use, of any part of the body or any permanent impairment of function of parts of body, regardless of any existing disability of the injured member or impaired body function.
Permanent Total Disability (PTD)	Permanent total disability is any work related injury, which permanently incapacitates an employee and results in termination of employment.
Record able Incident	Any incident due to KAHRAMAA business activities, and as determined by KAHRAMAA dominant influence. Determination of an incident as record able shall be made by HSED in conjunction with the appropriate line management.
Reportable Incident	Any incident due to KAHRAMAA business activities shall be reportable, In the case of doubt always report any incident.
Road Traffic Accident	An incident which has involved motorized vehicle designed for transporting people and goods over land and which has resulted in injury, illness and/or damage (loss) to people, assets, the environment, third party or KAHRAMAA reputation.

Severity Rate	Severity rate is defined as total number of lost working days per million hours of exposure. Severity Rate= $\frac{\text{No. of lost working days} \times 1{,}000{,}000}{\text{Exposure Hours}}$
Total Record able Cases (TRC)	Total record able cases are sum of fatalities, permanent total disabilities, permanent partial disabilities, lost working day cases, restricted working day cases and medical treatment.
Total Record able Cases Frequency (TRCF)	The total record able cases frequency is the number of total record able cases per million exposure hours worked during the period. Thus: TRCF= $\frac{\text{TRC} \times 1{,}000{,}000}{\text{Exposure Hours}}$
Unsafe Act	It is generally described as a human action departing from prescribed controls or job procedures or practices, or an action causing a person unnecessary exposure to a hazard.
Unsafe Condition	Unsafe situation or environment that may contribute in incidents.
Work Injury (Work-Related Injury)	A work injury is an injury or illness, regardless of severity, which arises from a single event (or a number of events close together in time) in the course of employment.

1- Communication of information

The communication of information for any incident must be considered independently on each occasion and in relation as to who can learn from it and what benefit it could give to KAHRAMAA.

2- Recording & Analysis of Incident Reports

HSED in conjunction with the appropriate line Management shall determine:

- Which incidents are record able within KHARAMAA safety and environmental incident statistics, and
- Assist in the evaluation of the lost time resulting from the incident.
  HSED shall maintain records of all incident reports. Analysis of incidents shall be undertaken by HSED to ensure KAHRAMAA safety and environmental programmer is effectively focused and to provide statistical data on safety and environmental performance.

3- Monitoring the follow-up of Recommendations

Monitoring the implementation of the recommendations by line management shall be undertaken by HSED. This shall include the maintenance of system to track the status of recommendations with a list of action points, completion dates, and responsible parties. In addition, HSED shall undertake random auditing on a periodic basis to verify the status of action points. Management shall be kept regularly informed by HSED on the progress in implementing the recommendations, along with audit findings.

4- Independent Investigation of Incidents by HSE

HSED shall, at their discretion, and in conjunction with the appropriate line Management, investigate any incident that it considers requires further an

5. Investigation Teams

In order to establish a general Management incident investigation teams, a balance should be drawn between the following:
the team should:

- Be independent of the incident,
- Have appropriate investigative expertise.
- Have local knowledge of the area in which the incident occurred, and
- Avoid being influenced by those who may have been involved with the incident.

Given the many practical difficulties in a achieving this balance, managers must exercise discretion in each case and establish incident investigation teams appropriate to its seriousness.
In most cases an independent Manager should lead the team. If contractors are involved, request their management's participation at the highest appropriate level. Other Team members shall depend on the requirement for specialized skills. As a guide.

The General Management investigation Team should consist of a minimum of two people and a maximum of six, drawn from the following list:

- Team Leader, preferably from an independent department or division to that concerned with the incident.
- Local Representative Employee from the area or department concerned with incident.
- Local line supervisor from the location, but, not from the affected line.
- Health, safety and environment representative.
- If applicable, the highest practical management representative from the contractor.
- Specialized expertise as necessary.

6. Terms of Reference

For an incident resulting in a fatality, the Terms of Reference for General management Incident Investigations shall be formally set out in writing by the Top Management. Where no fatality is involved, it is up to the appropriate functional Manager(Cooperate Manager or Director) to determine whether the terms of Reference should be specified by him or by the relevant divisional manager.

As a minimum, the **Terms of Reference** should include:

a. Authority to proceed with the investigation and as specified.
b. Timing for completion.
c. Establishment of :
    i. The facts, including events leading up to the incident,
    ii. The immediate and basic causes, and
    iii. Recommendations for management approval and follow up action.

It shall always be implied that incident investigations are not to apportion blame.

7. Incident Report Form

Only two signatures are required on the report form , if there are no injuries, the line supervisor and line manager (see attachment A) . If there are injuries, the Medical details part of the form shall also be endorsed by a medical representative.
It is a KAHRAMAA policy requirement to report near miss incidents and divisional managers should develop their own procedures for reporting these incidents. Such incidents should be reported within 48 hours of the incident occurring using the incident report in attachment 'A'

It is a line Management responsibility to complete the incident report form and distribute as incident report form and distribute . All incident report forms shall be copied at list to legal, human resources, finance, contracts and environment, safety & quality Managers and any other concern department as the incident dictated .
The role of safety representative is to provide expert advice and assist in making the incident report effective.

8. Follow-up of Recommendations

In all cases, line Management shall be responsible for the follow-up and action close out of recommendations from an incident investigation.

9. Instructions on completing a kahramaa incident investigation report form

The following gives instructions on how to complete the incident report form, which is shown in attachment A:

a- General Instructions

1. Print to ensure handwriting is legible.
2. Prepare your information in advance before filling up in the form.
3. If there is not enough room on the form, use reverse side or attach separate sheets – indicate on the bottom of the form if there is any attachment material .
4. If there any difficulty in completing the form, seek advice through line management.
5. Date should be in the form – day, month and Year.
6. Time should be as per the twenty four hour clock.

Form-1

Health, Safety and Environment Department

Incident Report

Date Reported:

Case and injury Information

Occurrence Cost Center:	Occurrence Location:	Date & time of Incident:
----------	----------	Date:----/----/------Time:--------Hrs.

Individual Category:	Individual's Name:	Staff No.:	Job Title:	Department:
Kahramaa Staff Contractor Staff Customer	----------	----------	----------	----------

Case Type:	Incident Type:	Injury or Illness type:
Occupational Illness ☐ Incident With injury ☐ Incident Without Injury ☐ Near Miss ☐	Motor Vehicle Fire / Explosion Electrical Other:----------	Cuts or bruises Burn Electrical shock Other:----------

Severity:	Effected Part of the body:	
Fatal Major Minor	Hands ☐ Legs ☐ Other:---------- ☐	No. of days away from work: ☐ No. of days restricted work activity: ☐ Date returned to work:----/----/--------, Date Deceased:----/----/-------

Incident Description and Analysis

Recommendations

	Action By:	Position:	Date:
----------	----------	----------	----------

Medical Details

Witnesses

Name	Position	Signature	Date
1- ----------	----------	----------	----------
2- ----------	----------	----------	----------
3- ----------	----------	----------	----------
4- ----------	----------	----------	----------

Investigation Details

Investigated & Reported By:

Name	Position	Signature	Date
1- ----------	----------	----------	----------
2- ----------	----------	----------	----------
3- ----------	----------	----------	----------
4- ----------	----------	----------	----------

Report Accepted By:

Name	Position	Signature	Date

Form-2

Incident report Form attachment sheet

HSE-P12/F2	Issue:0	14/10/2004

Records	Retention Time
Incident Report HES-P12/F1	3 Years
Incident report Form attachment sheet HES-P12/F2	3 Years

Appendix

HSE-M1-P3

HSE MANUAL AND PROCEDURE AUDITS & CLOSE OUT SYSTEM

HSE MANUAL AND PROCEDURE
AUDITS & CLOSE OUT SYSTEM

Department	Document Type	Document Title
HSE	AUDITS & CLOSE OUT SYSTEM	AUDITS & CLOSE OUT SYSTEM

Issue Approval	
Prepared By	**Approved By**
Bahaa Eddin Weld Ali *Sr.Safety Engineer*	Dr. Mohammad Al-Sulaity *Manager, HSE*
Signature:	**Signature:**

Issue Record

Issue No.	Date	Reason for re-issuing Procedure
0.0	14/10/2004	First issue of the Procedure.
1.0		
2.0		
3.0		
4.0		
5.0		

Review Frequency : Yearly.

Table of Contents

Contents	Page
Title Page	1
Document Control & Issue Record Page	2
Table of Contents	3
Purpose	4
Scope	4
Responsibilities & Authorities	4
Abbreviations & Terminolog	5
CLOSE OUT DATA BASE APPLICATION	6
TECHNICAL, SAFETY & ENVIRONMENTAL AUDIT	6-7
PURPOSE	6
SCOPE	6
RESPONSIBILITIES	7
PROCEDURE	7

ATTACHMENT

TSE Audit Procedure Outline-A	8

1) Purpose

It is Kahramaa policy to ensure that health, safety and environmental (HSE) hazards have been identified and that such identified hazards are eliminated/ minimized per agreed HSE findings report.
These actions to close out findings are an integral part of all audits and formal accident reports. By definition in this procedure, HSE findings from audits and reports will include:

- Findings, i.e, areas for improvement recognized and agreed by the responsible management;
- Action to be taken to reduce or eliminate risk, if any;
- Assigned manager responsible for the close-out of finding;
- Agreed date of close-out ;
- Estimated cost of action;

This document sets out the procedure for closing out HSE audit, and report findings in accordance with Kahramaa Health, Safety and Environmental Policy.

Kahramaa objective to ensure that all reasonable protection is afforded to the health and safety of individuals, and to the safety of the Corporation assets and operations as well as to the environment and public domain within which its operations are carried out.

A consequent objective is to ensure that all risks which are identified by audits and investigations are minimized through timely completion of agreed actions.

The procedure is applied as a simple and systematic way to assure Kahramaa management that HSE findings are being actioned per agreed close-out plans.

2) Scope

The scope includes all Project Safety Reviews, HSE audits, investigations, accident reports, environmental impact studies, and risk analyses which are coordinated or led by Health, Safety & Environment Department.

3) Responsibilities & Authorities

Kahramaa management will ensure that over-due/ pending action are reviewed and that suitable efforts are being taken to close-out HSE findings within the agreed time-table. The Custodian for the HSE Finding Data Base System will be Health, Safety and Environment Department.

4) Abbreviations & Terminologies

HSE : Health, Safety and Environment
HSED : Health, Safety and Environment Department
TSEA : Technical, Safety and Environmental Audit
PPE : Personal Protective Equipment
QR : Qatari Rial

The following terms will be used throughout this procedure and are deemed to have the meaning described below:

Finding	An area for improvement which was recognized during an HSE audit, study, investigation, or risk analysis. This area for improvement will generally point out a hazard or potential risk to personnel, property, environment, public, or financial loss.
Actions	These are the agreed action to close-out finding.
Close – out	It is an integral part of all audits and formal accident reports, and this will include, findings, actions to be taken to reduce or eliminate risk, agreed date of close-out, and estimated cost of action
Close-out date	The agreed upon date for close-out which has been agreed to by the responsible manager.
Estimated Cost	The estimated cost of corrective action proposed by responsible manager in QR and approved by Kahramaa.

5) Close Out Data Base Application

All reports to be included in the Close Out Data Base which are distributed by HSE Department will utilize a standard finding close-out format which will include as a minimum:

- Reference number
- Source of finding (audit name, investigation etc.)
- Finding of audit
- Agreed action
- Risk rating
- Responsible person (to close out action)
- Date of close-out
- Status (such as Pending, Closed, Pending-overdue)
- Estimated cost (corrective action).

6) Technical, Safety & Environmental Audit (TSEA)

6.1 Purpose

The Health, Safety & Environment (HSED) shall prepare on annual basis, as part of its business plan activity, Technical, Safety and Environmental audits which cover all Departments Kahramaa for the purpose of identifying potential risks and recommending ways of eliminating or mitigating these risks.

6.2 Scope

TSE audit shall involve an in-depth review of all aspects related to the facility/activity being audited and include:

- Inspection of field facilities and operation
- Review of Contractor(s) involved in the activity (ies):

  - Their management commitment to HSE Rules and Conditions
  - The actual compliance of their staff with HSE Rules and Condition including operational integrity of their equipment, housekeeping, safety training, environmental controls, etc...
- Assessing the impact of any differences between the actual operation of the facilities and the design intent.
- Review of accident, incident of near misses to confirm whether appropriate actions have been taken and that lessons learnt have been incorporated into operating practices.
- Assurance that any outstanding action arising from previous investigation and audits have been addressed.
- Review of the application of the field modification procedure.
- Evaluation of management HSE commitment and the adequacy of the organization structure.
- Review of the operating procedure manuals in place at time of review.
- Confirmation that inspection and monitoring requirements are being met.
- Review of the operational and HSE training programs.
- Review of the reliability records and safety equipment and systems.
- Review of the application of the work permit system.
- Review of the housekeeping and application of PPE.

- Review of the environmental controls in place.
- Review of the emergency plans, procedures and equipment.
- Review of the use of electrical equipment and tools.
- Review of the fire systems performance.
- Review of the working at height.

6.3 Responsibilities

The Health, Safety & Environment Department shall be responsible for scheduling audits.

6.4 Procedure

The audits will be carried out by multi-disciplined teams whose members are selected from the Technical units. Where needed the team may include members from the Administration units. A member from HSE Department should be the Team Leader of these audit.

Attachment - A

TSE AUDIT PROCEDURE OUTLINE

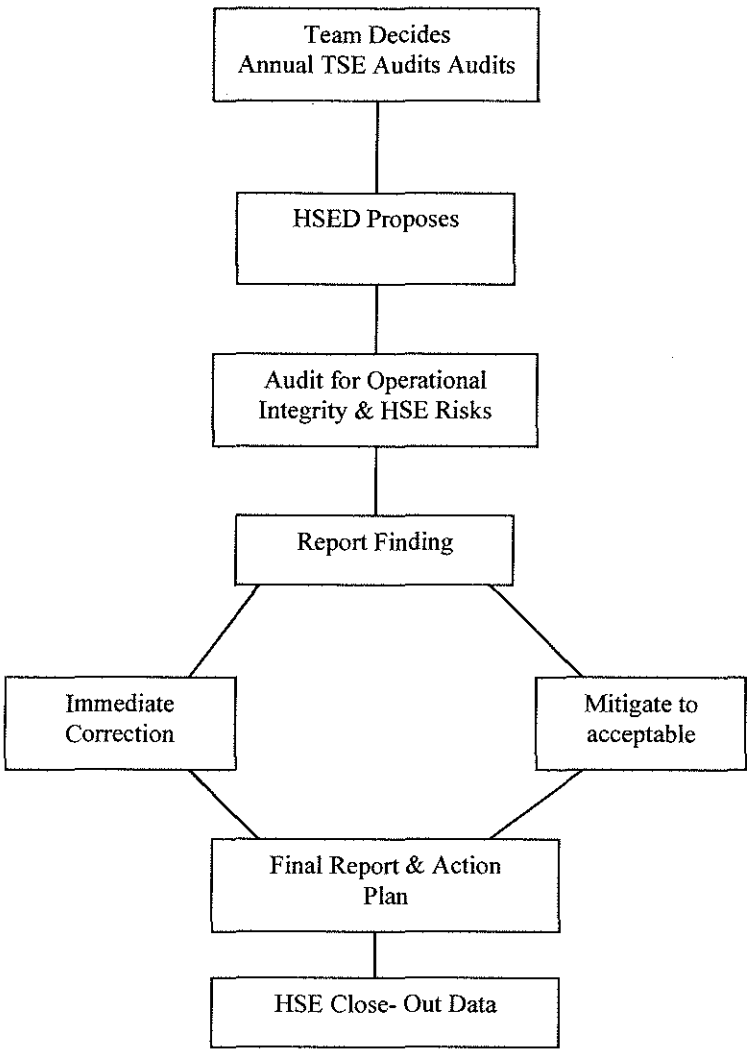

Records	Retention Time

Appendix

HSE-M1-P4

Personal protective equipment (PPE)

Personal protective equipment (PPE)

Department	Document Type	Document Title
HSE	Personal protective equipment	Personal protective equipment

Issue Approval	
Prepared By	**Approved By**
Bahaa Eddin Weld Ali *Sr.Safety Engineer*	Dr. Mohammad Al-Sulaity *Manager, HSE*
Signature:	**Signature:**

Issue Record

Issue No.	Date	Reason for re-issuing Procedure
0.0	14/10/2004	First issue of the Procedure.
1.0		
2.0		
3.0		
4.0		
5.0		

Review Frequency : Yearly.

Table of Contents

Contents	Page
Title Page	1
Document Control & Issue Record Page	2
Table of Contents	3
Purpose	4
Scope	4
Responsibilities & Authorities	4
Abbreviations & Terminologies	5
General provisions	6
Maintenance of PPE	6
Training	6-7

Attachment

Personal Protective Equipment Guide-A

Specifications of some personal protective Equipment-B

1.Purpose

Personal protective equipment (PPE) provides a barrier between the person at risk and the potential instrument of injury . The provision and use of personal protective equipment does not reduce or replace the need for proper accident prevention methods, such as engineering or administrative controls to be undertaken. Specification of such preventive measures shall always be explored before consideration of issue of personal protective equipment.

The purpose of this part is to ensure that all employees who may be exposed to a risk to their health or safety, are provided with personal protection equipment that is

- appropriate to the risks involved, shall no cause an unacceptable encumbrance to the weaver, shall fit the wearer correctly and shall control the specific risk without increasing the overall risk to that person.

2. Scope

KAHRAMAA shall ensure that the PPE that he supplies:

- Is appropriate for the risks involved and the conditions at the place where exposure to the risk may occur.
- Takes account of ergonomic requirements and the state of health of the person or persons who may wear it.
- Is capable of fitting the weaver correctly, if necessary after adjustments within the range for which it is designed.
- Is compatible with other items of PPE that may be required to be worn at the same time.
- Complies as a minimum with the relevant British or European Standards or Equivalent.
- Complies with HSED approved list of PPE.
- Is worn in accordance with the manufacturer's instructions for use.

3. Responsibilities & Authorities

Reporting through line management to HSE department the necessary personal protective equipment to all employees under his control who may be exposed to a risk to their health or safety while at work.

4. Abbreviations & Terminology

PPE : Personal Protective Equipment

HSE : Health, Safety and Environment

5. General provisions

KAHRAMAA Shall

- provide free of charge ,the necessary personal protective equipment to all employees visitors under his control who may be exposed to risk to their health or safety while at work.
- Establish a system whereby their employees can report to them the loss of or defects in PPE. This system shall also ensure that defective PPE is repaired or replaced before the employee concerned re-starts work.
- Produce a (PPE GUIDE)to indicate the required PPE relevant to a particular work activity,(see Attachment A)
- Make arrangements for the storage of PPE . The storage shall be so as to protect the equipment from damage of contamination . Those, which are, stored ready for use shall be kept separate from that which is awaiting repair or maintenance.

6. Maintenance of PPE

KAHRAMAA Shall:-

- Establish (PPE Maintenance Program) to ensure that the equipment continues to provide the degree of protection for which it was designed , this shall be made available together with records of tests and examinations as required.
- Clearly identify the responsibility for carrying our maintenance together with the details of procedures to be followed and their frequency.
- Make arrangements for cleaning and disinfecting if necessary before the PPE is re-issued.
- Issue guidelines on the expected useful lifetime of PP Equipment.

7. Training

KAHRAMAA shall

- Ensure that his employees are trained in the proper use of PPE, how to correctly fit and wear it, and what its limitation are.
- Ensure employees involved in maintaining, repairing and testing the equipment and in its selection for use are also trained.
- Ensure that in addition to initial training, users of PPE and others involved with the equipment, shall be given refresher training.
- Keep records of all training undertaken.
- Training shall include elements of theory as well as practice in using the equipment, and shall be carried out in accordance with the recommendation and instructions supplied by the PPE manufacturer.

The instruction and training shall include

Theoretical Training

- An explanation of the risks present and why PPE is needed.
- The operation, performance and limitations of the equipment.
- Instructions on the selection, use and storage of PPE related to the intended use, Written operating procedures such as permits to work involving PPE shall be explained.
- Factors which can effect the protection provided by the PPE such as :**other protective equipment, personal factors, working conditions, inadequate fitting ,defects, damage and wear,**
- Recognizing defects in PPE and arrangements for reporting loss or defects.

Practical Training

- Practice in putting on ,wearing and removing the equipment.
- Practice and instruction in inspection and, where appropriate, testing of PPE before use,
- Practice and instruction in the maintenance which can be done by the user, such as cleaning and the replacement of certain components.
- Instruction in the safe storage of equipment.
- The extent of the training that is required will depend on the type of equipment, how frequently it is used and the needs of the people being trained.

ATTACHMENT B

Personal protective equipment

ITEM NO.	EQUIPMENT/ CLOTHING	APPROVED SPECIFICATIONS
1 1.1	**Head Protection** Safety Helmet	Safety helmet peak type, fully insulated, made our of glass fibre , c/w embossing ' Think Safety ' at the rear side and Kahramaa Logo at the front side of the hat and a chinstrap. Approval: BS 5240,1987/ ANSI Z89. 1-1986. Note: a. White colour for 11- employees. b. Yellow colour for 10- employees c. Red colour for loss prevention employees. d. White with red crescent for medical personnel. e. Orange colour for visitors. f. Blue colour for laborers . g. For projects contractors: Green for staff, Blue for Laborers.
1.2	Helmet / Ear Defender Combination	Safety helmet peak type, fully insulated, made out of glass fiber c/w embossing ' Think Safety' at the rear side and Kahramaa logo at the front combined with ear defender. Approval: BS 5240,1987/ansi z89.1-1986.
1.3	Fireman's Helmet	Fireman's Safety helmet for close proximity fire fighting purpose, made out of glass fiber multi-layered flame retardant shell, light weight c/w polycarbonate visor, Nomex neck curtain fully compatible with breathing apparatus or Helmet made out of epoxy coated aluminum finish c/w clear polycarbonate visor and aluminized skirt for chest and shoulder. Approval: BS3864: 1989/CEN TC 185/WG 3N65 (EU Standard)
1.4	Welding Helmet with	Welding helmet, lightweight thermoplastic with green lens and double stop locking device. The face shield with non-conductive spark guard with clear lens and ratchet suspension system. Approval: ANSI Z87.1.1989 or equivalent.
2 2.1	**Ear Protection** Ear protectors	Ear protectors, light weight with minimum sound attenuation 28 dBat 500 HZ TO 40HZc/w adjustable all-purpose head band. Approval: ANSI S3.19-1974
2.2	Aural protectors (Ear Plugs)	Aural protectors, insert type ear plugs molded of soft silicone rubber, to fit all sizes of ear canals c/w small plastic case, key chain and neck cord. Noise reduction rating :NRR 26 Db Approval: ANSI S3.19-1974.
3 3.1	**EYE protection** Eye protectors (Goggles)	Eye protectors full view wide vision type with clear frame, non-mist Polycarbonate lens conforming to BS 2092, 1987 IMPACT GRADE 1,PROTECTION AGAINST c(chemical),D (Dust), G (Gas) & M (Molten metal) Approval: BS2092, 1987 Grade 1 CDGM, ANSI Z87-1.1989 and CSA Z94.3-M88.
3.2	EYE protectors (Goggles Fit over Spectacles)	Eye protectors full view wide vision type to fit over spectacles with clear frame, conforming to BS 2092 impact grade 1,protection against C(Chemical),D(Dust),G(Gas)& m(Molten metal). Approval: BS 2092 Grade 1.
3.3	Eye protectors (Safety Glasses)	Eye protectors safety spectacles with gray frame and gray scratch resistant polycarbonate lenses containing UV inhibitor reducing UV rays c/w grew side shields. Approval: BS 2092 Grade 2.
3.4	Clear Cover Lens For Welders	Clear cover lens for welder's eye and face protector. Approval: ANSI Z87 .1.
4 4.1	**HAND protection** Gloves(mechanical Hazards)General Purpose	Gloves, men's GP . cotton lined with chrome leather palm and knuckle strap, vein patch. Non slip, rugged for handling rough, sharp or slippery material with natural rubber coating suitable for both wet/dry work

4.2	Gloves (chemical Hazards)	Gloves for protection against chemicals having resistance to penetration (leakage) of air, water and chemicals. Approval: Pr EN374 or equivalent.
4.3	Gloves(Thermal Risks)For Welders	Gloves for protection against thermal risks having resistance to small drops of molten metal and contact heat from 100 c to 500 c.Size 14" L. Approval: pr.EN 407 OR EQUIVALENT.
4.4	Gloves (fire Fighting)	Gloves for close proximity fire fighting duties manufactured from asbestos free aluminized material with suede material for palm.
4.5	Gloves (Cotton)	Gloves made out of clanton flannel with plastic dots on palm and finger areas for grip.
4.6	Gloves (Drillers)	Gloves, drillers, hide palm, chrome leather back inseam, gunn pattern.
4.7	Gloves (Reversible Gauntlet)	Gloves, reversible gauntlet, grome leather (G.L.8 lined gloves).
5 5.1	**Foot Protection** Safety Boots (Short Neck)	Safety boots, leather, with synthetic rubber soles and heels, anti-static. Chrome leather uppers, leather lined throughout soles and heels. Oil, alkali, acid and heat-resisting, minimum 160 degrees C.Not iron shod and to have good anti-slip properties and puncture resistant stainless steel midsole. The margin between the edge of the penetration resistant midsole and either:- a. The edge of the insole if one is present, or b. The position of the edge of the moulding last in other constructions. Shall not be grater than 6.3.mm. Steel toe caps to BS953,1979 Impact energy 200 joules. **NOTE**: Boots should have date of manufacture, manufacturer's name, applicable standard & country of origin stamped on it. Stocks from two-year-old and over are not acceptable. With tongue and lace fastening. Approval: BS 1870 part 1. 1988 orDIN4843 or equivalent.
5.2	Safety Boots (Short Neck)	Safety boots, leather, Cambrelle lining and ESD cushion with ¾ sock liner insole, leather padded collar and steel toe. NOTE: Boots should have date of manufacturer, manufacturer's name, applicable standard & country of origin stamped on it. Stocks from two-year-old and over are not acceptable. With tongue and lace fastening. Approval: ANSI M175/C75
5.3	SAFETY boots (long Neck)	Safety boots, leather, with synthetic rubber soles and heels, anti-static. Chrome leather uppers, leather lined throughout soles and heels. Oil, alkali, acid and heat-resisiting, min. 160 degrees c. Notiron shod and to have good anti-slip properties. Puncture resistant stainless steel midsole, the margin between the edge of the penetration midsole and either:- a. The edge of the insole if one is present, or b. The position of the edge of the moulding last in other constructions. Shall not be grater than 6.3 mm. Steel toecaps to BS 953, 1979. impact energy 200 joules. NOTE: Boots should have date of manufacture, manufacturer's name, applicable standard and country of origin stamped on it. Stocks from two-year-old and over are not acceptable. Without tongue & lace fastening. Approval: BS 1870, 1989 part 1 or DIN 4843 or equivalent.
5.4	Rubber Boots	Rubber boots, knee length, with multi ribbed steel shanks for arch support, heavy tread soles for non-slip traction and tough, comfortable fabric linings. C/w steel safety toe and midsole.
5.5	Fireman's Boots	Fireman's boots, ankle length, made out of asbestos free aluminized outer, reinforced toe cap, heat and oil resistant neoprene sole.
5.6	Safety Boots For MV/HV Electrical Works	Leather boots with electrical hazard protection, water repellent and steel toe, ANSI M 175/C75 rated with Fiberglass shanks and poron 4000 Cushion
5.7	Work Socks	Socks for work, made out of rugged material moisture absorbent, mid-calf length with tube design to fit all sizes (free size).
6 6.1	**Safety Clothing** Cotton Coverall	Coveralls. Material pre-shrunk lightweight 100% cotton. Elasticized waistband in back with front adjustable belt and buckle. 5-pockets: Two fronts slanted. One breast and two rear-one with button. 2-way heavy –duty zipper with metal snap closure at top and with Kahramaa logo, in golden colour, 3-cm size, printed on the left side pocket. All stress points

		reinforces with bar tacks. Double stitched seams with heavy duty colour fast thread. Permanent sewed- in front creases. Colour: for Engineers – light gray, Forman- khaki, operators/fitters/technicians- blue
6.2	Flame Retardant Coverall	Coverall, long sleeve, material 100% cotton, having low thermal conductivity with permanent protection against flame and heat. Approval: BS 6249, 1982.
6.3	Splash resistant clothing	Splash resistant Clothing made of double coated, flame resistant PVC18 mils thick on polyester stretch fabric with protection from certain chemical splashes during Haz-mat clean up operation. (Note: Does not provide vapour protection to the skin and not resistant to all chemicals.
6.4	Hazmat Splash Clothing	Hazmat Splash Suit made out of synthetic non-woven, substrate composite laminated on both sides with inert thermoplastic films, stitched and sealed seams, front zipper with flap integral hoot\d with elastic openings and elastic wrists for chemical – permeation resistance . Approval : ASTM F739-85 Texas Research Institute.
6.5	Splash Resistant Clothing (Disposable Type)	Splash Resistant Coveralls, disposable type made out of 3-layered polypropylene fabric with anti-static properties as protection against dust, fibres, splash and spray of most organic and aqueous –based contaminants and non-toxic chemicals.
6.6	Fire Fighting Suit	Fire fighting suit made of asbestos free strong aluminized fabric, or polyamide/ Para- aramid material, non-flammable, heat reflecting, lightweight and flexible. Approval: BS 3791, BS 6249 and BS 5438.
6.7	Fire Tunic/Coat (Nomex)	Fire tunic/ coat manufactured from flame resistant Nomex Delta T material. Approval: BS 6249.part 1, 1982.
6.8	Fire Trousers	Flame Resistant Over Trousers manufactured from Nomex Delta T material. Approval : BS 6249, part 1.1982
6.9	Fire Fighter's Tunic (MULTIFAB)	Fire Fighter's Tunic made of polyamide-imide, Para Aramid and F.R. Viscose material with F.R. silver reflective. Approval: BS 3791. BS6249. BS5438. BS 6654 and ISO/DIS 6530
7 7.1	Respiratory Protection Respirators (Dust & Mist)	Respirators for protection against dusts and mists having time weighted average not less that 0.05 mg/m or 2 million particles per cubic fott. Approvals: MSA-NIOSH &MSHA
7.2	**Respirators (paint Spray & Mist)**	Respirators for protection against paint vapours mists. Lacquers and enamels: organic vapours upt 1000 ppm. Approvals: MSA- NOISH & MSHA.
7.3	**Non Toxic Dust particles Mask (Disposable Type)**	Non- toxic dust particle mask, cotton, light weight, comfortably adjustable to facial contour and double-elastic head straps for protection against dusts and mists with a TWA not less than 0.05 mg/m. Approval: NIOSH/MSHA

NOTE: These specifications are considered the minimum requirement and kahramaa reserves the right to change specifications whenever deemed necessary.

ATTACHMENT A

PERSONAL PROTECTIVE EQUIPMENT GUIDE

WORK ACTIVITY / P.P.E	APPROVED CLOTHING /COVERALLS	HARD HAT	APPROVED FOOTWEAR/BOOTS	APPROVED GENERAL PURPOSE GLOVES	DUST MASK	RESPIRATOR CARTRIDGE TYPE	EAR PLUGS	EAR DEFENDER	GOGGLE MULTIPURPOSE	FACESHIELD	SAFETY HARNESS & LINE	CHEMICAL RESISTANT SUIT	CHEMICAL RESISTANT GAUNTLETS	RUBBER BOOTS	AIR FLOW HOOD/APRON/GAUNTLETS(PVC GLOVE)	SAFETY SPECTACLES	WELDING HELMET/JERKIN/GLOVES	DOSEMENTER/SURVEY METER READING	FILM BADGES	DISPOSABLE COVERLLS,GLOVES SHOE COVERS & RESPIRATOR
	X	X	X						X	X		X	X	X						
ACID HANDLING	X	X	X						X	X		X	X	X						
BATTERY MAINTENANCE	X	X	X						X	X			X							
CAUSTIC SODA HADLING	X	X	X						X	X		X	X	X						
CHEMICL HNDLING	X	X	X			X			X	X		X	X	X						
DEGREASING	X	X	X									X	X							
OIL SPILLS	X	X	X						X			X	X	X						
CEMENT HADLING	X	X	X	X	X															
CHIPPING	X	X	X	X	X															
DRILLING	X	X	X		X		X		X											
DUST ATMOSPHERES	X	X	X		X	X										X				
ELECTRICAL	X	X	X						X	X										
GRINDING	X	X	X	X	X		X													
GRIT BLASTING	X		X						X						X					
HIGH WIND CONDITION	X	X	X		X		X									X				
HEIGHT ABOVE 2 METERS	X	X	X								X									
JACK HAMMERING	X	X	X	X	X		X	X	X	X										
PAINTING (SPRAY)	X	X	X			X			X											
RADIOGRAPHY	X	X	X															X	X	
WORKING IN HIGH NOISE LEVEL	X	X	X				X	X												
WET WEATHER CONDITIONS	X	X	X									X		X						
WELDING	X		X														X			
LABORATORY	X		X													X				
ENTRY TO LAB./WORKSHOP	X		X													X				
WORK IN VICINITY OF WELDING	X	X	X													X				
SADING MACHINE OPERATIONS	X	X	X		X	X	X		X											
ASBESTOS HANDLING	X	X	X																	X

NOTES

This chart shows appropriate PPE that should be considered it does not mean that the identified PPE is always necessary, not sufficient. PPE will not stop incidents occurrence.

Records	Retention Time

Appendix

HSE-M1-P5

FIRE SAFETY PHILOSOPHY

FIRE SAFETY PHILOSOPHY

Department	Document Type	Document Title
HSE	FIRE SAFETY PHILOSOPHY	FIRE SAFETY PHILOSOPHY

Issue Approval	
Prepared By	**Approved By**
Bahaa Eddin Weld Ali *Sr.Safety Engineer*	Dr. Mohammad Al-Sulaity *Manager, HSE*
Signature:	**Signature:**

Issue Record

Issue No.	Date	Reason for re-issuing Procedure
0.0	14/10/2004	First issue of the Procedure.
1.0		
2.0		
3.0		
4.0		
5.0		

Review Frequency : Yearly.

Table of Contents

Contents	Page
Title Page	1
Document Control & Issue Record Page	2
Table of Contents	3
Purpose	4
Scope	4
Responsibilities & Authorities	4
Abbreviations & Terminology	5
Principles of Fire Safety 5.1 Principles of Fire Safety 5.2 Fire Prevention 5.3 Fire protection 5.4 Fire – Fighting 5.5 Overall Fire Safety	6-7
Design of new facilities 6.1 Process Facilities 6.2Other Facilities (Electrical Equipment, Buildings, ETC.)	7
Existing Facilities 7.1 Master plan of "fire Safety System" 7.2 Pre- Fire Plans 7.3 Fire Audits	8
Fire – Fighting Organization	8
Fire exercises and Drills 9.1 Process Facilities 9.2 Buildings	9
Fire – Fighting	9
Fire Regulations / Instructions 11.1 Fire Precautions 11.2 Fire Regulations	10
Types of Fire- Fighting Equipment 12.1 Portable Fire – Fighting Appliances 12.2 Fixed Installations	10-11
Equipment – Inspection and Maintenance	11
Appendix 1 : Classification of Fires	12
Appendix 2 : Checklist of Fire Safety Requirements for Specific areas/ equipment.	13
Appendix 3: Specification of fire detection and fire fighting systems for sub-stations.	14/30

1) PURPOSE

It is not the purpose of the KAHRAMAA Fire Safety Philosophy to provide detailed instruction on design, operation and emergency fire response at KAHRAMAA Facilities, but rather to highlight the main elements that need to be addressed in the management of fire safety.
The aim is to encourage a balance approach to hazard management by ensuring that the resources provided to manage fires and explosions are commensurate with the risks of these events.

2) SCOPE

Fire Safety is achieved by an integrated approach to :-

- Fire Prevention
- Fire protection
- Fire – Fighting

The level of fire safety that is achieved is based on the optimum combination of the above , in terms of reliability and cost-effectiveness.

This combination is determined by sound engineering and safe guarding practices, based on the application of appropriate codes and standards.

3) Responsibilities & Authorities

Periodic independent audits of fire safety at each KAHRAMAA Facility shall be carried out. The purpose of the fire audits should be to assess the effectiveness of fire prevention, fire protection and fire- fighting at the facility.
These audits may be conducted as part of the Technical Safety Audit of the facility or may be carried out by consultants.
All new projects shall be required to prepare a specification to Kahramaa HSE Fire safety philosophy, a fire system design and materials shall be approved by HSE Department.

4) Abbreviations & Terminology

HSE : Health, Safety and Environment

BS : British Standard

NFPA : National Fire Prevention Association

5) PRINCIPLES OF FIRE SAFETY

The following summaries the main principles in ensuring effective management of fire safety:-

- Fire and explosion assessment during design.
- Application of appropriate design codes and standards.
- Knowledge of the hazards by everyone involved in design and operation.
- Elimination or reduction of hazards so far as is reasonably practicable.
- Resources (manpower and equipment) which take account of the risks.
- Provision of adequate information on fire hazards to personnel.
- Periodic review of the risks and hazards

5.1 FIRE PREVENTION

Fire prevention measures are, to a large extent, an integral part of the design and construction of facilities.
A number of well established design guidelines are available (e.g. BS., NFPA codes), Which when applied to the design, together with good engineering practice, should result in facilities with a high degree of reliability and consequently low probability of fire incidents.

5.2 FIRE PROTECTION

layout and distances between fire- hazardous equipment shall be arranged such that in the event of a fire, the probability of escalation is minimized. However, since it is not always feasible to achieve complete separation of individual pieces of equipment, additional precautionary measures may be necessary.
The basic objective of fire protection is to limit or prevent the escalation of a fire , to avoid risk to life and to minimize material damage.

Fire protection is achieved by an appropriate combination of the following :-

- Layout and separation of equipment
- Control of ignition sources
- Passive fire protection
- Active fire protection
- Adequate access for fire – fighting.

5.3 FIRE – FIGHTING

Despite the optimum application of fire prevention and fire protection measures, the possibility of occasional fire incidents will continuer to occur.
Facilities shall be provided with adequate first – aid fire – fighting equipment such as portable fire extinguishers, Fire incidents.
Any person who directs or uses first aid fire – fighting equipment must ensure that the correct type and method of use is applied. Examples of such types and methods are given in appendix 1.

To manage major fire incidents, an organization (civil defense) needs to be in place.

5.5 OVERALL FIRE SAFETY

The optimum inherently safe design (see section 6) is achieved when there is a proper balance among all factors (fire prevention, fire protection and fire fighting) contribution to safety.
The purpose of the checklist in Appendix 2 is to provide guidance on the fire safety requirements that need to be considered for specific areas and equipment. It is not intended to be prescriptive.
The actual fire safety equipment to be installed is determined by carrying out an assessment of the fire risks/ scenarios, including the frequency and consequences of accident events. And taking into account such factors as manning levels, response time, physical separation , automatic systems for shutdown and isolation etc.

6) DESIGN OF NEW FACILITIES

The concept of " inherently safer design " shall be applied to all new facilities .This means that, wherever possible, hazards are designed out at source. This is achieved by the use of appropriate standards for design and operation, the optimization of the layout for safety and the quality standards applied to design , construction and operation.
All new projects shall be required to prepare a specific health, Safety & Environmental (HSE) philosophy, which shall include an overview / summary of the proposed design of fire safety systems.

6.1 PROCESS FACILITES

All new projects and extensions to existing facilities involving the design of process facilities shall be required to :

- Identify fire and explosion hazards
- Asses the probability and consequences of such events.
- Make a judgment on the adequacy of the risk reduction measures.

This shall be achieved by carrying out a fire & explosion hazard Assessment of the design , Normally this will be done by the design contractor at basic engineering and reviewed / approved by KAHRAMAA/ HSED.
All new projects and extensions to existing facilities shall be required to specify the design codes and standards for fire safety which are to be applied to the design.

6.2 OTHER FACILITIES (ELECTRICAL EQUIPMENT, BUILDINGS ETC.)

All new projects and extensions to existing facilities shall be required to specify the design codes and standards for fire safety which are to be applied to the design.
In GENERAL BRITISH STANDARD AND NATIONAL FIRE PREVENTION ASSOCIATION (NFPA) codes shall be applied to the design of buildings

7) EXISTING FACILITIES

7.1 MASTER PLAN OF "FIRE SAFETY SYSTEMS"

All existing facilities shall prepare a master plan of fire safety systems. The plan covers the entire installation and quantifies and states the location of all fire safety related systems.

7.2 PRE- FIRE PLANS

Since facilities and premises vary in size, configuration, and manpower available for fire – fighting, it is not possible to lay down hard and fast guidelines to cover every situation and eventuality. It is therefore imperative that each site develops a specific pre- fire plan to provide guidance to fire- fighting personnel.
The main objectives of the pre- fire plan are to identify all credible fire scenarios and the resources required to handle each scenario.

The pre- fire plan should include the following:-

- Layout diagram (s) of the facilities (including buildings), showing the location of fire- fighting's systems.
- A description of possible fire scenarios for each area, including an overview of actions to be taken in the event of each scenario.
- Interfaces with third parties (civil defense)
- Manpower requirements.

8) FIRE – FIGHTING ORGANISATION

The optimal structure of the emergency in each KAHRAMAA OPERATIONAL AREA should be based on the following site – specific factors:-

- The size , location and complexity of the installation(s).
- A available around- the – clock manpower.
- Response time and technical capabilities of civil defense.

A pre- requisite for the fire – fighting organization to act effectively is the existence of well prepared pre- fire plans, as referenced in section 7.2.

The KAHRAMAA Senior Safety Engineer is normally the local fire commander. These positions must be covered by competent, experienced and fully trained personnel .
All persons required to cover this position will receive appropriate refresher training at approved fire training establishments.
The number of persons assigned to fire crews should be based on the type of installation(s).
There shall be a sufficient number of trained fire fighting personnel on the installation at all times to handle fire incidents. Where operation/ maintenance shift personnel are required to provide " first- aid " fire fighting response, they shall receive training.

9) FIRE EXERCISES AND DRILLS

9.1 PROCESS FACILITIES

At least one major fire exercise per year shall be carried at selected location . Additionally , at least three fire drills shall be carried out.
Exercises should , wherever possible , involve civil defense organization.
All exercises and drills will be recorded in an official log book.

9.2 BUILDINGS

At least once, preferably twice a year a practice fire drill is carried out simulating conditions in which one our more of the escape routes from the building are obstructed.
During these drills, the fire alarm should be operated by a member of the staff who is told of the supposed outbreak and thereafter the fire routine should be rehearsed as fully as circumstances allow.
Building fire drills shall be carried out at offices (head offices, customer services department etc.).

10) FIRE – FIGHTING

The aim should be to ensure that all staff receive instruction and training appropriate to their responsibilities in the event of an emergency.
It should be based on written instructions, and notices posted in convenient locations.

Instructions and training generally should provide for the following:-

- The action to be taken upon discovering afire.
- The action to be taken upon haring the fire alarm.
- Raising the alarm, including the location of alarm call points and alarm indicator panels.
- The correct method of calling the civil defense
- The location and use of fire- fighting equipment.
- Knowledge of the escape routes and assembly points.
- Appreciation of the importance of fire doors and of the need to close all doors and windows at the time of a fire and on hearing the fire alarm.
- Stopping machines, processes, and Isolation of power supplies where appropriate, especially air conditioning units, where they are not already connected to an automatic shutdown system actuated by the fire alarm
- Evacuation of buildings.
- Mustering at pre- designated assembly points.
- The correct method of reporting the incident.
- Etc.

Personnel will be allotted specific duties to be carried out in the event of afire. Persons who discover an outbreak of fire must raise the alarm and apply the nearest suitable extinguishing medium, if it is safe to do so.
All fires must be reported and an incident report must be completed.

11) FIRE REGULATIONS/ INSTRUCTIONS

11.1 FIRE PRECAUTIONS

- All employees shall practice fire prevention and control within their own areas of operation.
- The risk of fires occurring can be greatly reduced by adherence to safe work procedures and maintaining a high standard of housekeeping.
- Smoking is only allowed in designated areas, it is prohibited in the vicinity of hazardous area.
- Flammable liquids paint, thinners, etc., and flammable materials should be properly segregated and stored. The quantity of flammable materials, liquids etc., should be kept to the minimum required.
- Spillages of hydrocarbons, acids or other chemicals must be cleaned up immediately.
- Any leakage of flammable gases or liquids should be reported.
- Power supplies, including domestic / office supplies must not be overloaded.
- Compressed gas cylinders, e.g. butane, propane , acetylene, oxygen, etc., must be stored in a safe area and suitably segregated.
- When leaving offices , rest rooms, etc., care shall be taken to ensure that smoking materials are extinguished, all electrical apparatus and lights are switched off and all windows and doors are closed.

11.2 FIRE REQULATIONS

- Fire regulation shall be clearly and concisely expressed and displayed in prominent positions.
- Fire equipment and means of ESCAPE PLANS shall be displayed in all areas, giving details of type and availability of equipment.
- At conspicuous positions in all parts of the building, printed fire instruction notices shall be exhibited, stating in concise terms the essentials of the action to be taken upon discovering afire and on hearing the fire alarm.
- Fire wardens should be nominated for all premises, decent upon size and number of floors. Their duties being to coordinate the actions of personnel in the
- event of afire, closing offices, toilets, etc., in their designated area to ensure that all persons have been evacuated and to account for them all at the muster point.
- The civil defense on arrival will take complete charge of all fire- fighting and life saving operations and should be advised by the senior responsible person present of the action they have taken and the potentialities of the fire.

12) TYPES OF FIRE – FIGHTING EQUIPMENT

Two types of equipment are in general use:

- Portable first- aid fire – fighting appliances .
- Fixed installation

12.1 PORTABLE FIRE- FIGHTING APPLIANCES

All facilities, offices, sub-stations, sites etc., will be provided with portable first-aid fire-fighting appliances and may be supplemented by the addition of fixed installation systems depending on the fire risk and size of the project.

Types of portable fire-fighting appliances are:-

- Water fire extinguishers
- Foam/AFFF fire extinguishers
- Dry chemical powder fire extinguishers
- Carbon dioxide fire extinguishers

12.2 FIXED INSTALLATIONS

Fixed installation systems such as automatic water deluge systems, sprinkler systems, foam systems , dry powder systems, and gaseous , FM-200,inergen CO2 systems , shall be provided where most appropriate and necessary. Where these are installed, an effective system of testing in compliance with code requirements and maintenance must be established.
Operating and maintenance instructions shall be provided for fixed protection systems .
Systems shall allow for personnel evacuation before release . All access points shall have status indicators and warning labels/ notices.

13) EQUIPMENT – INSPECTION AND MAINTENANCE

It is the responsibility of lime management of ensure that all fire-fighting , active fire protection and fire detection equipment is available for immediate use in the event of an outbreak of fire and maintained in good working order.
After operation, all equipment must be restored to usable condition immediately or replaced, as it is essential that a full complement of equipment is available at all times.
All equipment subject to inspection should be suitably identified, e.g. numbering system.
Fire pumps will be run up weekly . Records shall be kept and faults attended to immediately.
The frequency of inspection and testing will very according to the type of equipment and operational requirements. Detailed programmed should be laid down in the planned preventative maintenance system, For example:-

	Monthly	Yearly
Portable Fire Extinguishers	Visual inspection	Inspection and maintenance
Fire Hose & Hose reel and Accessories	Inspection and cleaning	Actual test

Fixed Installations

Water spray actuating valves –3 months
Check weight & installations (CO_2) – 6 months
Any defects / deficiencies must be reported and immediate corrective action taken.
A record of such inspections will be maintained and be available for inspection.
All emergency equipment shall be protected from adverse environmental conditions.

APPENDIX 1 : CLASSIFICATION OF FIRES

There are four main Classes of Fire-A,B,C and D

Class A	Fires are those involving combustible materials such as wood, paper, fabrics, etc The most effective extinguishing medium being water.
Class B	Fires are those involving flammable liquids such as petroleum products, paints, solvents, etc. These can be extinguished by using foam, dry chemical powder, carbon dioxide. **Note**: Where alcohol-based liquids are involved, special foam extinguishers will be provided.
Class C	Fires are those involving flammable gases, e.g. –propane, butane, acetylene, etc. Extinguishers the flame should be avoided until the source of the gases is located and isolated. Isolation shuts off the fuel source and any resultant fire can be dealt with, i.e. in most cases a class A.
Class D	Fires are those involving burning e.g. aluminum, magnesium, etc. Such burning metals usually react violently with the application of water. Blanketing with sand or earth is a satisfactory means of extinguishing. A special dry comical powder, e.g. ternary eutectic chloride is also recommended.

Electrical Fires:
In the past, were at one time classified, but it is now accepted that electricity is merely an added hazard. After electrical isolation, a fire in the equipment can be extinguished. Where isolation is temporarily impracticable, carbon dioxide, FM-200or dry chemical powder should be used.

Note: where dry chemical powder is used, it should be borne in mind that it could damage intricate equipment, and could prove awkward to clean up.

APPENDIX 2 : CHECKLIST OF FIRE SAFETY REQUIREMENTS FOR SPECIFIC AREAS/ EQUIPMENT

Equipment	Fire Extinguishers (Hand held)	Fire Extinguishers (mobile)	Fire Water System (Fixed) (Note 1)	Foam System fixed	Passive protection	Gaseous Extinguishing system	Fire Detector (Note 2)	Gas detector (Note 3)
Switch Gear	Yes	?	_	_	_	yes	yes	_
Control Room	Yes	_	_	_	_	yes	yes	_
Battery Room	Yes	?	_	_	_	_	yes	_
Transformers	Yes	?	yes	_	_	_	yes	_
Pump Room	Yes	?	_	_	_	_	yes	_
Chlorine Store room	Yes	_	_	_	yes	?	yes	yes
Cables	Yes	_	_		yes	yes	yes	_
General Stores	Yes	?	?	?	_	?	yes	?
Laboratory	Yes	?	?	?	?	?	yes	?
Offices	Yes	_	yes	_	_	_	yes	_

(Note 1) Type of fixed Fire Water System to be Specified i.e. Hose reel, Deluge System, Sparkler System, etc.
(Note 2) Type of Fire Detector to be Specified , i.e. UV/IR Flame, Heat & smoke detector, etc.
(Note 3) Type of Gas Detector to be specified , i.e. flammable, Toxic, etc
yes – Definitely Required
? – may be Required

Appendix 3:

SPECIFICATION OF FIRE DETECTION AND FIRE FIGHTING SYSTEMS FOR

220/132kv , 220/66kv , 132/66kv , 132/33kv , 66/11kv , 33/11kv Sub-Station

1.0 SCOPE

1.01 This specification calls for the design. manufacture, supply, installation testing & commissioning and protection requirements of fire detection and fire fighting equipments to be provided in 220/132kV,220/66kV,132/66kV,132/33kV,66/11kV, 33/11kV Sub—Station.

Complete fire fighting system shall include but is not limited:

- Fire Detection and Alarm System
- Fire Suppression for Control & Telecommunication Rooms
- Transfer Fire Suppression for Control & Telecommunication Rooms
- Transformer Fire Protection
- General Fire Safety Requirements in Building Design

I .02 STANDARDS COMPLIANCE

All basic equipment proposed must be formally approved and listed by at least two international recognized testing laboratories from the following list:

- LPCB Loss Prevention Council Board , United Kingdom
- FM Factory Mutual , USA
- ULI Underwriters Laboratories Inc., USA
- ULC Underwriters Laboratories of Canada
- VdS Verein deutscher Sachvesicherer , Germany
- AFNOR Association francaise de normalization, France

The supplier will be subject to the interpretations of the authority having jurisdiction as final arbitrator of any disputes relative to the applicable statutory requirements.

2.0 LOCATION

Service condition
All materials and equipment shall be rated and *suitable* for satisfactory operation in these standard service conditions.

3.0 FIRE DETECTION & ALARM SYSEM

The supplier shall provide complete fire detection and alarm system for each rooms including:

- Basement Rooms
- Cable Tunnels
- Ceiling arid Floor Voids

The contractor will be responsible for all materials and equipment, installation, testing and commissioning of the system.

Automatic Detectors

- These shall be plug—in type separate base and sensing unit. A LE.D shall be provided in the base, which will operate when detector has been activated.
- The LED should remain 0N" until the system has been completely reset.
- The detection system shall sound alarm bells in the event detector operates.
- Adequate numbers of detectors to be provided in each room floor and ceiling voids included.
- All floor and ceiling voids mounted detectors shall be provided with remote lamp indicators.
- For ceiling points this should be installed on the suspended ceiling and for floor void lamp on the wall near the detector t. the height of 2 Mtr.
- Care should be taken to protect the detectors from close proximity of air flow from ducts.
- Detectors shall be installed not less than one meter from air diffuser.
- The detectors shall operate on 24 vDC. And power loop wiring shall be monitored.
- The detectors shall be supervised and provide a trouble signal at the control panel if
  the detector head is removed and an alarm signal if the detector outer chamber is removed.
- The detector shall be of either the following applicable types mentioned in this specification.

Photo-Optical Smoke Detectors

Photo optical smoke detectors operate on a photocell and light scattering principle. The detector shall respond to product of combustion or smoke with particle size from approximately 10 microns dawn to 0.2 microns and of the proper concentration. Proper concentration define by UL as the ability to sense smoke in the *0.2* to 4 percent obscuration per foot range. The remote lamp indicator shall he installed on the ceiling tile.

Air Duct Smoke Detectors

Air Duct Smoke Detectors shall be Photo—Optical type and shall include built in sampling tubes. The sampling tubes shall extend a minimum of three-fourths the width of the duct and be located approximately at the center of the vertical dimension. Remote Lamp Indicator shall install on the ceiling tiles.

Fixed Temperature heat detectors

Fixed temperature beat detectors shall be entirely electronic in operation and have a thermistor as ambient temperature sensor to be fully reset table. Detector temperature rating shall be approximately 120% of the maximum expected ambient temperature of the area to be protected.

Combination Fixed—Temperature and Rate of Rise Heat Detectors

The fixed temperature element shall be independent of the rate of rise element. The rating for the combination fixed temperature and rate of rise type shall be

approximately 120% of the expected ambient temperature arid rate of rise shall have the setting of 8^0C per minute.

All elements shall be reset table and entirely solid state. Adequate special detectors as required for air-conditioning system shall be provided accordingly.

Fire Detector Alarm Panel

The fire detector panel shall be based on high performance ring-bus technology. The panel shall be modular configuration

Shall be compact. modular housing concept. which allows several housing to be combined mechanically.

High Flexibility with regard to existing or changing location requirement

Technical Data

Supply voltage	:240 V/SO Hz.
Emergency power supply	: 2 x 12 ah
	:12 V/max. 2 x 24 An
Quiescent current	:150 mA without operating module
	:200mA with operating module
Ambient temperature	:0^0C to 50^0C
Housing	:ABS. 10% glass fibre-reinforced or sheet steel min. thickness 1.5mm
Protection class	:I to DIN EN 60950
Type of protection	: IP 30, IP55

Manual Call Points

Manual alarm call points shall be provided at several convenient point located in the natural path of exit, so that alarm can be given by operating personnel independently of automatic system.

These shall be either Break Glass" type and the word Fire Alarm in Arabic and English engraved. The color of these alarm points shall be red, manual call point for particular zone shall be connected on the same circuit as the detector being provide for the zone.

Alarm Devices

Both audible and visual alarm devices shall be provided. Devices connection shall made to produce a general or primary alarm condition.

Alarm Bell

Bell shall be under dome type at least 150mm. diameter, finished in red stove enameling ***and*** shall be capable of producing continuous ringing as required. The movement shall be housed in a metal enclosure, secured to metal back plate suitable for surface or concealed mounting. Both indoor arid outdoor bell shall be provide Bella for outdoor installation shall be weather proof protected against rain water and dust.

One alarm bell shall be provided per compartment. Bells shall be distributed and connected in at least 2 alarm circuits.

A minimum level of 65 db shall be produce by the sounders at any point in a building.

Alarm Flasher

An outside warning flasher shall be installed arid shall activate simultaneously with alarm bell. Flash shall be red and visible enough to be noticed even during daytime for quick identification by the Civil Defense force. The equipment shall have diameter not less than 100mm. and installed on a two meter pole above the highest building of the substation.

Auxiliary Equipment
Shutdown of air conditioning system shall make automatically upon receipt of alarm. Other auxiliary equipment such as fire dampers arid fans shall activate on the first alarm. Upon restoration of the panel to normal condition auxiliary systems shall automatically operate again.

Alarm System Connection to SCADA System
Provision for connection from Fire Control Panel is to be made through SCADA system for actuating an *alarm* in the Energy Control Center. A separate Fire and Fault signals shall be transmitted to *ECC.*

Spare Parts

For efficient operation of the system the contractor shall provide spare parts.

Manuals

The contractor shall provide 5 copies of complete operation, maintenance and spare parts manual for fire alarm system in both English and Arabic languages, including:

Detailed outline drawings with part numbers.
Detailed procedure for disconnecting and re—assembly of equipment
Detailed procedure for operation and maintenance
Detailed circuit diagram
The complete test procedure with a faultfinding guide

4.0 FIRE SUPPRESSION FOR CONTROL & TI~LECOMMUNICATION ROOM

Section 1.01 SYSTEM DESCRIPTION AND OPERATION
The system shall provide a clean agent gas (FM 200) concentration of 7% by volume. minimum

Combination of Ionization Smoke and/or Photo Optical smoke detectors shall actuate each system. Detectors shall be installed at a maximum coverage of 23 m^2 per detector in both room, ceiling void and floor void of protected area. Detection shall he wired to provide a double knock configuration. The method of operation shall he cross—zone detection system.

The automatic operation of each protected area shall be as follows:

Actuation of one (I) detector, within the system zone shall:
- Illuminate a WARNING lamp on the control panel
- Energize the Fire Alarm Bell inside the hazard area

Actuation of a second detector, within the system zone shall
- Illuminate a PRE-DISCHARGE lamp on the control panel.
- Energize the Strobe Horn
- Start the panel time delay sequence.
- Enable the system abort sequence
- Shut down the HVAC system and / or close dampers
- Close all doors to the protected.

After completion of the time delay sequence the agent shall be discharged and the following shall occur:

Illuminate a SYSTEM FIRED lamp on the control panel.
Energize visual indicator outside the hazard in which the discharge occurred.
Energize the SYSTEM FIRED audible device

The system shall be capable of being actuated by manual discharge devices located at exit of each area, Operation of a manual device shall duplicate the operation of the second detector described in the above except the time delay and abort functions shall be by-passed. The manual discharge station shall be of the electrical actuation type and shall be supervised at the control panel.

Include in addition to the above the following features in a single enclosure.

- Audible circuits.
- Diagnostic LED's for easy trouble—shooting.
- Solid—state field programmable Lime delay 0 to 60 seconds,
- Protective covers over high voltage terminals,
- Connections to power a remote annunciation.
- Agent cylinder isolating switch.
- Cross—zone principle of agent discharge.

MATERIALS AND EQUIPMENT~ GENERAL REQUIREMENTS:

The FM—200 Clean Agent System materials and equipment shall be standard products of the supplier's latest design and suitable to perform the functions intended. When one or more pieces of equipment must perform the same function(s), they shall be duplicates produced by one manufacturer.
All devices and equipment shall be UL. Listed and/or FM approved.

FM-200 STORAGE AND DISTRIBUTION:

Each system shall have its own supply of clean agent.

The system design can be modular, central storage, or a combination of both design criteria.

Systems shall be designed in accordance with the manufacturer's guidelines.
Each supply shall be located within the hazard area, or as near as possible, to reduce the amount of pipe and fittings required to install the system.

The clean agent shall be stored in Series Agent Storage Containers. Containers shall be super—pressurized, with dry Nitrogen, to an operating pressure of 360 psi @ 70^0 F. (2500 kpa at 20^0C). Containers shall be of high-strength alloy steel construction and conform to NFPA 2001.

Containers shall be actuated by parallel—wired initiators through a Agent Release Module (ARM). located at each agent container,

Each container shall have a pressure gauge and low—pressure switch to provide visual and electrical supervision of the container pressure. The low—pressure switch shall be wired to the control panel to provide an audible and visual "Trouble" & alarm in the event the container pressure drops below 272 psi (1875 kpa). The pressure gauge shall be color coded to provide an easy, visual indication of container pressure.

Agent storage containers shall be provided with a reliable means, other than

weighing, of determining the agent weight within the storage container during normal routine service. The device used shall be a Liquid Level Indicator and shall not require any additional space when the container is installed.

Each container shall have a pressure relief provision that automatically operates when the internal temperature exceeds I50^{0}F. (66^{0}C).

Engineered discharge nozzles shall he provided, within the manufacturers guidelines. to distribute the FM—200 agent throughout the protected spaces, The nozzles shall be designed to provide proper agent quantity and distribution.

Nozzles shall be available in pipe sizes 3/8" thru 2.0" (BPS 10mm thru 50mm). Each size shall be available in 180° and 360° distribution patterns.

Ceiling plates, can be used with the nozzles to conceal pipe entry holes through ceiling tiles.

Distribution piping, and fittings, shall be installed in accordance with the manufacturer's requirements, NFPA 2001 and approved piping standards and guidelines. Qualified individuals using good, accepted practices and quality procedures shall install all distribution piping. All piping shall be adequately supported and anchored at all directional changes and nozzle locations.

Alt piping shall be reamed, blown clear and swabbed with suitable solvents to remove burrs, mill varnish and cutting oils before assembly.

All pipe threads shall be seated with Teflon tape pipe sealant applied to the male thread ONLY.

5.0 FIRE PROTECTION FOR TRANSFORMERS

Fire Protection

Transformer s generally contains the largest quantity of combustible substance located in a substation. Therefore, special attention should he given to their location, relaying and fire protection. Fires in oil-insulated transformers result principally from breakdown of insulation. This may be caused by overloads, switching or lightning surges, gradual insulation deterioration, Low oil level, moisture or acid in the oil, or failure of an insulating bushing. Arcing that follows an electrical breakdown can burn through the tank or vaporize the oil, creating pressure sufficient to force the cover or rapture the tank. A considerable amount of burning oil may be expelled over the large area, and intense fire may follow.

Water Spray Fixed System

The most common type of extinguishing agent employed to protect power transformers and reactors is water. A water spray system is a special fixed pipe system connected to a reliable source of water and equipped with discharge nozzles to provide a specific water discharge pattern and distribution over the surface or area to be protected. This system shall be provided for the protection of power transformer and reactors.

General

The supplier shall design, supply, install, test and commission a complete and reliable water spray system.

The installation shall complete in all respects and include a water storage tank, fire

pumps, controllers, heat activated detectors and sprinklers, valves, nozzles, water pipe work, instrumentation and alarm facilities and any other equipment necessary for satisfactory operation of the system. A fire department connection shall also be provided.

System Design

The system shall be capable of extinguishing the single biggest fire risk in the project.
Water shall be delivered to the risk at no less than:

For 132 kV and below 10.2 lpm/rn^2 of water.
For 220 kV substation 21.0 lpm/in^2 of water

Calculated on the surface of the regular shaped prism four sides and top which the risk could be exactly accommodated. The system shall be hydraulically calculated and approved prior to the installation.

For risk taking the form of appurtenances or which are elevated (e.g. transformer cooler fins, conservator tanks or similar raised tanks) and where such risks, because for size or position, are given their own prism the surface area must then include the underside or bottom.

Deluge Valves

Deluge valve shall be either controlled hydraulic or electrical actuation. Basis of selection shall be explained and supported by technical data. In any case manual mechanical actuation shall be provided.

Deluge valve shall be located as near as possible but, outside the protected transformer/reactor and provided with isolating values on both inlet and outlet sides. Visual and audible devices shall be provided at each protected area.

The system should be designed so that the water discharge will not cause a flashover. This is recommended to avoid spurious tripping cause by false operation of the water-extinguishing system.

Heat sensing devices located around the perimeter of transformer shall actuate deluge valve. Isolating valves arid Non-Return valves shall be provided in the discharge pipes wherever necessary.

Consideration should be given to the automatic tripping of the transformer and its pumps and fans upon activation of the water system. For general design and guidance refer to NFA 15.

Water Supplies

The water supply for the water spray system shall be reliable fire protection supply. Such system shall be: Horizontal Split Case Fire Pump Set.

Water supply shall be enough for the next operation to have an established fire protection while waiting for replenishment. A reliable method replenishing the supply shall be provided. An underground concrete tank suitable for the system is desired accordance with civil project division requirement.

The underground tank shall be size for minimum occurrence of 10 minutes discharge time. The bidders shall submit suitability calculations for system, for size of the underground water tank for satisfactory fire protection of Transformer and /Reactors.

Piping System

The piping system is connected to the water tank through an automatically actuated valve (one each for each transformer/reactor room), which initiates a pump running to supply through a specific gravity valve the flaw of water to the nozzles. The nozzles used through out the installation shall be as per manufacturer recommendation. For effective water coverage, nozzles shall be distributed in upper and lower rings. Pipe shall be galvanized steel pipe, Sch40, ASTM A53 Grade B or approved equal, exposed parts shall be painted red.

FIRE PUMPS

Pumps shall be listed for fire protection use and chosen on the basis of water supply available. The electrically driven fire pumps shall be connected to a reliable power source.

Supplier shall provide and install a complete fire pump set, which shall serve the water spray system.

The fire pump shall be fully automatic package unit consisting of Electric Motor driven pump to act as duty pump, and Diesel Engine driven pump to act as standby pump and Electric motor driven Jockey pump.

The scope of work include design, supply, shop testing, commissioning of the fire Pump Set. All the equipment's shall be suitable in all respects for the local climatic conditions.

The pump shall be designed to deliver 150 % of the rated flow capacity at not less than 65% of the rated head, in conformance to NFPA *20.* (Standard for the Installation of Centrifugal Fire Pumps)

GENERAL

The fire pump shall be provided with a membrane type pressure tank with a minimum capacity of 200Ltr. to minimize the number of time the start of the pump and to maintain the system under pressure all the time. However, the system shall be such that in case any demand is required, the Jockey pump should start due to pressure drop in the system through pressure switch. In case the water demand exceeds the supply capacity of Jockey pump the Electric pump should start through the pressure switch to meet the Water demand. In the event of power failure the Diesel engine should start through a pressure switch provided for it. The diesel pump should have both facilities to stop automatically arid manually,

The pumps shall be fitted with mechanical seals, pressure switches that will individually start the pumps, The main and stand—by pump shall be connected to a remote alarm panel. Each pump shall be fitted with automatic air release valve. Discharge pressure gauge + valve, and suction compound pressure/vacuum gauge + valve. The pump sets shall be manufactured, assembled, tested and supplied by an approved Manufacturer.

Fire Pump Set shall be of Horizontal Split—Case Pump Centrifugal type in accordance with NFPA 20 and ANSI requirements, capable of delivering the scheduled duties. The appropriate flow rate for engine and pump cooling shall be added to the net duties given.

CONSTRUCTION

The pump casing shall be of extra heavy cast iron, with minimum tensile strength of 30,000 lbs and shall be split parallel to the shaft. Bearing housing supports, suction and discharge flanges shall be cast, bored and machined integrally with the lower half casing. Upper and lower half casings shall be dowelled and bolted together. Removable upper half casing must permit inspection or removal of the entire rotating assembly without disturbing the piping. Flanges shall be No.125 ASA flat Face Suction and No.250 ASA Flat Face Discharge.

The impeller shall be of Bronze enclosed single opposed suction type both statically and hydraulically balanced. The impeller shall be keyed to a steel (416 Stainless steel) shaft. The shaft shall be protected by; (416 Stainless steel) (ceramic coated 416 stainless steel) (316 steel) sleeves with a gasket joint between it and the impeller for protection against shaft corrosion. The sleeves will be positive drive by means of a key and with an external shaft sleeve nut set screwed to the shaft for a reduction in shaft wear.

The pump shall be equipped with Bronze renewable throat bushings, casing rings, and inter stage channel ring to reduce casing wear and maintenance costs. The casing rings and channel ring shall be hold by Anti-rotational pins to permit easy reinstallation and reduce down Time, impeller wear rings are optional and will be of Bronze material. The rotating element shall be mounted in (Grease) (Oil) lubricated ball bearings (when temperatures rise above 225^{0}F. Water jackets shall be added). Heavy cast split glands shall be furnished on each stuffing box design for easy removal for packing inspection and maintenance. Various mechanical seals can also be installed, Heavy fabricated steel base (with drip lip) to mount the pump and driver shall be furnished. Flexible shaft coupling shall be furnished to connect the driver pump. Coupling shall be enclosed in (standard) coupling guard.

MOTOR

The main pump set shall be provided with a direct drive totally enclosed 2900 rpm Standard Motor wound for a 415 volt 3 phase 50 Hz. supply with class "F" insulation complete with flexible coupling and mounted with motor alignment jacking points.

Motors to be NEMA Design B squirrel cage induction type (drip—proof) with (1.15) with (1.0) service factor and suitable for operation on (230/4lSvolt, 3Fhase, 50hz. power supply). Motor size shall be sufficient to prevent overloading at operating conditions or at the lowest listed head conditions whichever point requires greater horsepower. Following installation, grouting and connection of all piping pump and motor must be checked for alignment in accordance with standards of the ill.

The stand-by pump shall be driven by a diesel engine of the four-stroke compression-ignition mechanical injection type. It shall be directly connected to the pump shaft via flexible couplings and mounted on a galvanized and painted steel base complete with the starting batteries and fuel tank of sufficient capacity for 6 hours running at full load. Cooling of the engine shall be via the pumped firewater, which will pass through a water heat exchanger to drain. The engine shall be manufactured
by a well known international firm specialized in this field and be complete with all exhaust piping, insulation and be complete with all exhaust piping, insulation and silencers.

DIESEL ENGINE

The engine shall be water cooled type and shall be according to BS 5306 and

incorporating components such as twin drive belts, fire resistant fuel pipes, close governor control (4.5% drop) and 13.5, guarding. The diesel engine fuel tank shall have a capacity equal to 1 Gallon/Horse power + 5 % Volume for Expansion + 5% volume for sump. According to the power out put of the engine, the electrical system shall have either 12V DC or 24V DC. The Diesel engine is having the following facilities.
Oil pressure switch should be for low oil pressure indication, alarm or stop engine through control.
Engine temperature switch for high engine temperature indication, alarm or to stop the engine through Control.

Fuel solenoid (electrically operated) in order to stop the engine with a switch or Control.

Stopping lever to stop engine by pulling this lever manually,
Starter motor and solenoid are powerful starter motor and solenoid relay, which are fitted on the engine.
Alternator for charger battery, tachometer, indicators, etc.
Air releasing pumps to release the air from fuel line to engine. The diesel engine shall be provided with the following:

Lubricating System
Exhaust System.
Cooling System
Fuel System
Pump Circulating System

Each pump with its engine or motor shall be assembled and tested as a packaged-unit complete with its own starter panel, etc.

JOCKEY PUMPS

The jockey pump shall be capable of a duty of scheduled duties. Each pump shall be of the high efficiency vertical multi-stage type direct driven by a 2900 rpm totally enclosed electric motor with class "F" insulation and wound for a 415 volts 3 phase 50 Hz. Power supply.

FIRE PUMP SET CONTROLLER

Each pump set shall have its own individual control panel complying with requirements of the relevant. N.F.P.A. 20 requirements, with each having a pressure switch connected to the fire main header via a 15 mm diameter tube.

All pressure switch pipe works shall he arranged with a test valve and an upstream drain valve assembly. The Diesel and Electric Pumps shall also be fitted with a black flow bypass and non return valve to allow either or both pumps to operate even if the test valve is inadvertently left isolated.

The enclosures shall be mild steel and powder coated red panels. Control switches. indicators and motors shall he fitted on the doors of the controller.

MAIN PUMP CONTROLLER:

The Main Pump Controller shall have the following facilities:
Door interlocked isolator switch,
Fuses

Contactors for star delta starting.
Overload relay to protect the motor for overloading.
Control relays.
SFT fuses for control.
indicators for power on, pump run, trip etc.
A meter to show the motor running current.
Selector switch for hand off auto mode, etc.
Anti condensation heater.
Neutral Link.
Break Glass Manual Start push button and stop push button (if required).

STANDBY PUMP CONTROLLER:

The standby pump controller shall have the following facilities:

A charger in order to keep the battery always charged a meter shall be provided to show the charging status.
The charger ON/OFF switch shall be provided on the panel door and Voltmeter shall be fitted on the door to
Show the battery status.

Timer for starting pulse: With this timer, cranking is adjusted to the required time.
Timer for off delay: It helps to avoid immediate ON and OFF of the engine.
Control Fuses.
Control Relays.
Indicators for DC healthy, pump run, pump trip fail to start etc.
Emergency push button shall provide on the dour Lu stop the engine in emergency condition.
Hand off auto selector switch
Relays for low oil pressure engine temperature.
Tachometer
Hour run meter
Break glass manual start switch.
Audible warning device

JOCKRY PUMP CONTROLLER:

The Jockey Pump Controller shall have the following Facilities:
Door interlocked isolator switch.
Starter (Star delta for above 4.0 KW motors) for Jockey Pump Motor
Overload protection.
Control fuses,
Indicators for run, trip, power on.
I land off auto selector switch etc

Terminals are provided in all panels for easy cable termination.
All of the pumps can run either manually (by turning the selector switch to hand mode) or automatically. In auto mode, the pumps will run automatically due to pressure fall discharge line and it will stop automatically when the pressure reaches to the set point. Pressure switches provided on the discharge manifold have to be settled to the required points for this function.

ANCILLARY EQUIPMENT

The installation shall be complete with all necessary valves, pressure gauges,

alarms, proving and testing equipment etc, as required by the NFPA —20 rules.

The pump set shall be equipped with:

A pressure Relief Valve should be UL/FM approved. The valve opens quickly to relieve excess pressure in the system and maintains a constant pressure in the fire pump discharge, regardless of flow rate through out the system. It should contain pilot system to maintain a fixed relief pressure with high accuracy and dependability, eliminating the typical leakage and dependability, eliminating the typical leakage and jamming problems found in mechanical, spring—Loaded relief valves.

Flow Meter Unit shall be provided on the discharge line in order to check the capacity of the pump set. This unit shall have the following components and specifications.

PROPELLER shall be magnetically coupled with the drive mechanism through the sealed oil filled gearbox to eliminate water entering the meter assembly. The propeller shall be conical shaped three bladed propellers.

BEARING in propeller shall be water lubricated ceramic sleeve and spindle bearing system with a ceramic/stainless steel spindle.

INDICATOR - TOTALIZER shall be mechanically driven by the meter mechanism and features a ful14 diameter, 250 degree sweep dial with a six digit, straight reading type total size and sweep test hand.

CHANGE GEARS shall be easily exchanged in the field when changing the dial or when re calibrating for different pipe sizes

INDICATION PANEL

The MEP sub—Contractor shall provide a dedicated indication panel for the complete installation, which shall have the following facilities;

Schematic diagram showing locations of all major items of plant. i.e. pumps, control valves, section valves, electric alarm pressure switches, etc. Each item shall be clearly engraved in Arabic and English.

Each main pump shall have the following indications:

Amber Lamp for fault alarm,
Red Lamp for fire alarm.
Green Lamp for correct system status

The Jockey pump shall have the following indications:

Green Lamp for pump running.
Amber Lamp for fault alarm.

Each control and sectional valve shall have the following indications:

Green lamp for valve open
Amber Lamp for fault alarm, valve

Each electric alarm pressure switch shall have the following indications

Amber Lamp for fault alarm.
Red Lamp for fire alarm.

WATER SUPPLIES

Water storage facilities shall be provided to suit the given hazard rating which shall

be calculated on the maximum water flow and time at this flow rate as indicated by NFPA-20 regulations.

Water tanks shall be provided with a 1.5mn x 1,5m x l.0m deep suction pit to prevent pump cavitations and to make full use of the stored volume.

APPROVAL

Upon completion of the systems, the specialist contractor and contractor shall furnish the client a certificate of approval from legally constituted authorities having jurisdiction, or in lieu there of, a certified copy of the same.

OPERATING INSTRUCTIONS

Upon completion and approval of the systems, the contractor shall provide an experienced Engineer to instruct the client's operators in all details of operating and maintaining the system. The MEP sub-contractor shall provide three (3) sets of type written operation instructions, parts list and service manuals for all equipment, wiring diagrams, control diagrams and test reports suitably bound.
Drain valves, test valves, control valves, shall be fitted with approved enameled signs indicating their use.

RECORD DRAWINGS AND MANUALS

The contractor shall hand over prior to the completion of the works the record drawings and manuals in accordance with contract specifications and requirements.

6.0 FIRE EXT1NGUISHER

Portable Type C02 fire extinguisher containing minimum of 6 kgs.C02 Gas. Fitted with a long discharge horn approximately one meter hose hooked to the body intake of extinguisher with plastic handle, complete with wall bracket and hook shall he provided.

Extinguishers shall be mounted on walls the base of the extinguishers shall be about 50 cm. from floor level and the top not more than 1.5 mtr. each of these locations on the wall shall be marked as "Fire Point" in English and Arabic. The extinguisher shah be painted black.

The location of extinguisher shall be in such way that the travel distance for portable extinguisher shall not exceed 15 meter adjacent to normal entrance /exit doors. Operating instructions shall be located on the front of the extinguishers — other labels and markings shall not be placed on the front. AU instructions marks shall be written both in Arabic and Eng1ish. Method of operation shall be by "seize and squeeze" by grasping extinguisher handles, moving safety pin and squeezing together, the extinguisher will operate by releasing handle controllable discharge is possible.

The minimum number of extinguishers to be provided shall not be less than as shown below

Control Room 3 No.

Oil Tank Room	2 No.	
Telecommunication Room	1	No,
Switchgear Room	3	No.
GIS Room	4	No.
Battery Room	1	No.
Any Additional Room	1	No.
Spare Extinguisher	1 No.	

If any basement rooms additional extinguisher shall be provided, number shall he decided with it size.

7.0 Mobile Fire Extinguisher

One 5Okgs. Wheeled type Dry Powder Lire extinguisher shall be provided. The delivery hose shall be hard-rubberized high pressure non-collapsible type fitted with control type nozzle, The length of delivery hose shall not be less than 5 mtr, The spherical type of extinguisher is not acceptable. Operation instruction shall be either pictorial type in both Arabic and English language.

8.0 General hydrant System for Outside Areas

In addition to the fixed water spray equipment for the transformers there shall be individually controlled hydrant valves, fixed suitable operational position at ground level, enabling alt points of the substation to be covered. The minimum number for hydrant valves to be provided shall be two.

The hydrants shall have 65mm. outlets. And shall be fitted with instantaneous coupling with *plug* chain

Each hydrant valves shall be provided with weatherproof steel cabinet containing:

Foam making nozzle and branch pipe
3% AFFF foam concentrate compound
A quality light synthetic fiber hose 65mm x 30 meters not rubber lined, jacketed hose which be proofed against mildew and bacterial attack and shall offer protection against acid alkalis and oils.
Each hose nozzle shall be supplied with light alloy instantaneous couplings in accordance with requirement of BS 336

9.0 GENERAL FIRE SAFETY REQUIREMENT IN BUILDING

Building Construction — The following fire safety requirements must be included in the civil design and construction of the building,

The substation building including building walls, partition walls between transformers and all individual rooms are to be designed and constructed according to approved fire ratings appropriate to standard.

Each room inside the substation such as control room, GIS room, battery room, telecom room, etc. are to be considered as fire compartments.

From the point of fire—safety, compartmentalize is regarded as means of breaking ~p total building volume into small cells where, with an efficient protection system, lire will remain localized and be suppressed. To prevent fires from Spreading one compartment to another compartments shall be made structurally sound enough to withstand full fire exposure without major damage and that boundaries be capable of acting as non—conducting heat barrier.

Smoke Control and Ventilation

Adequately planned ventilation system and systematic removal of smoke, heat and toxic gases from building must be included in basic concept of building design as follows.

Air Conditioning System

The A.C equipments shall have a link connection between fire alarm system and the air—handling unit. The operation being that when the fire alarm is actuated, the A.C system and all its supply fans arc shut down and the exhaust air shall still be moved directly to the outside without re—circulation to other sections of the building by controlled ventilation.

Removal of Smoke after Fire

Natural or mechanical ventilation for the removal of products of combustion should be provided in the control room, switchgear room. CIS room. battery room etc.
Panel or sky windows or any other approved methods *in* exterior wails, which can be opened remotely from approved locations, such windows and panels and their control shall be clearly identified.
In rooms other than one fitted with FM *200* Suppression System, mechanical air handling equipment may be designed to accomplish smoke removal under fire condition, he return and exhaust air shall be moved directly to outside without re—circulation to other sections of the building. For details of electrical requirements and installations refer to electrical specification of civil works of the substation.

10. Cable Trenches and Cable Holes Protection

Cable Trenches

Fire barriers of approved material are to be provided to protect cable fire spreading from one compartment to another compartment of the building. All trenches should be covered with steel plates or approved fire retardant material, which could be removed for inspection and repair or erection works.

Cable Holes

All cable holes are to be with approved fire resistant material. which can be removed iii case of any repair or erection work.

Control House Cable

The cable used in substation control house should not readily propagate a fire.

Emergency Exits

in the event of fire or emergency there should be clear, unobstructed and safe means of egress to outside, These should allow for safe egress in an emergency from all parts of the substation. Every means of egress. so arranged that possibility of any one fire blocking all of them is minimized.

The doors should open outwards and be clearly marked "EXIT" in Arabic and English. They should be equipped with anti panic bars.

Exit Signs

At every required exit doorway and wherever otherwise required to clearly indicate the direction of egress, an exit sign at least 150mm high in both Arabic and English with letters not less 20mm wide, shall be provided.

Safety Equipment

Adequate safety equipment shall be supplied as follows

Instrument for measuring the percentage of Oxygen concentration in the Basement and the detection of the toxic and flammable gases.
Instrument for homogenous breathing
Instrument for First Aid and Rescue Equipment

711.0 GENERAL REQUIREMENTS

General

This specification indicates the scope and type of work required. Any item of materials, equipment not specifically mentioned in the specification hut incidental or required to complete installation and proper operation of the system described, or reasonably implied in connection with safety and fire protection of the substation, shall be furnished by the contractor as if called for in detail in the specification, All equipment and materials furnished tinder this specification shall conform to
National Fire Protection Association (NFPA) standards or any other codes or standards, *which* ensure an equal or higher quality of equipment than NFPA standards. The name of manufacturer and serial number shall appear on all major components,

The bidder shall state in his proposal for every instance from designing to commissioning, alt regulations codes and standards which we intends to follow giving full identification of each regulation, code and standards, It is preferable that any system or equipment provided by the vendor shall have a well reputed local agent having a permanent establishment so that any spare parts required could be easily obtained even after the expiry of contractor warranty period.

Any deviation by the contractor from a regulation, code or standard stipulated by the contractor in his proposal shall advise in due time to the client and fully supported. Failure to comply with any of the above requirements by the contractor shall entitle the owner to either reject partly or totally the components or equipment as applicable, or to impose on the contractor to follow any international regulations, codes and standards at no additional cost.

Documents & Drawing for Verification

The fully detailed plan proposed by the vendor for the fire protection of the substation, comprising of simple layout plan showing detectors, control panels, etc. and all other system requirements as given in the specification, is to be submitted together with technical details, catalogues. etc. with initial tender proposal.

The contractor shall submit shop drawing for erection, etc., for all fire protection system during construction period but before the erection work, f or approval by owner.

As Built Drawings and Manuals

Upon completion of the installation and prior to final inspection, the Contractor shall

furnish four copies of "As Built: drawings. In addition the contractor shall furnish four copies of a manual giving complete instructions for the operation, inspection, testing and maintenance of the system including wiring diagrams.

Quality of Work

The contractor shall perform all his construction, erection and services in a manner and of quality presently employed by the industry for the classification of work performed and considered as first class to accomplish this and he shall use materials of highest quality, perform tests and to carry out a constant coordination and critical inspection program.

The owner reserves the right to place his inspector to inspect the contractor's performance; The owner will not interfere with contractor's performance of work. However, the owner reserves the right to reject any and all work, material or equipment which seems to inferior or poor *quality* or not in conformance with contract.

Acceptance Test (All 1tems)

Upon completion of work and prior to provisional and final acceptance of the installations of any system, the contactor shall subject the system in the presence of the owner representative, to all test required by the appropriate NFPA standards.

The following tests, aside the recommended test procedure by the manufacturer fur transformer fir protection system shall be conducted:

Hydraulic test in accordance with NFPA- 13.

Actual water discharge test at designed pressure *per* protected area.

Actual heat test of at least thermostatic detector per protected area.
Plow rate test through permanently installed flow meters in pump house,

The contractor shall provide all connection. Kit or equipment necessary fur conducting the tests. The contractor shall give one—week advance notice in writing to the owner.

Training

The contractor will provide on the job training *in* the use of appropriate fire protection system installed to nominated staff of the owner.

The demonstration for commissioning test will not be considered as training.

Warranty

General warranty conditions of Owner as laid down in the turnkey contract for substation would apply also for fire protection system. This specification, however, shall be reviewed from time to time in the light up to date requirements and other development in the field of fire protection technology.

Records	Retention Time

Appendix

HSE-M1-P6

PRESSURE AND LEAK TESTING

PRESSURE AND LEAK TESTING

Department	Document Type	Document Title
HSE	PRESSURE AND LEAK TESTING	PRESSURE AND LEAK TESTING

Issue Approval	
Prepared By	**Approved By**
Bahaa Eddin Weld Ali *Sr.Safety Engineer*	Dr. Mohammad Al-Sulaity *Manager, HSE*
Signature:	**Signature:**

Issue Record

Issue No.	Date	Reason for re-issuing Procedure
0.0	14/10/2004	First issue of the Procedure.
1.0		
2.0		
3.0		
4.0		
5.0		

Review Frequency : Yearly.

Table of Contents

Contents	Page
Title Page	1
Document Control & Issue Record Page	2
Table of Contents	3
Purpose	4
Scope	4
Responsibilities & Authorities	4
Abbreviations & terminology	5
General Strength Testing	6
Strength Testing	6
Leak Testing	6-7

1. Purpose

The purpose of this part is to summaries the methods used for pressure / leak testing and gives advice on the precautions necessary to avoid conditions likely to result in danger. The advice given is limited to general principles and does not detail precise procedures. Written procedures shall be in place prior to any pressure / leak testing is preformed.

Pressure tests are applied to certain items of equipment, e.g. pipelines, vessels, etc., to ensure that each item is suitable for the proposed service.

Pressure testing carried out using a liquid, usually water, as the pressurizing medium (hydraulic testing) is the least dangerous method and shall be used wherever practicable.
Pressure testing using gas, or air as the pressurizing medium (pneumatic testing) is potentially very dangerous and shall only be carried out when the use o hydraulic testing is not possible.

2. Scope

The purpose of this part is to summaries the methods used for pressure / leak testing and gives advice on the precautions necessary to avoid conditions likely to result in danger. The advice given is limited to general principles and does not detail precise procedures. Written procedures shall be in place prior to any pressure / leak testing is preformed.

Pressure tests are applied to certain items of equipment, e.g. pipelines, vessels, etc., to ensure that each item is suitable for the proposed service.

Pressure testing carried out using a liquid, usually water, as the pressurizing medium (hydraulic testing) is the least dangerous method and shall be used wherever practicable.
Pressure testing using gas, or air as the pressurizing medium (pneumatic testing) is potentially very dangerous and shall only be carried out when the use o hydraulic testing is not possible.

3) Responsibilities & Authorities

Testing shall only be performed under the direct supervision of Kahramaa Line Supervisors.

1) Abbreviations & terminology

COMPETENT INSPECTION PERSONNEL	for inspecting equipment who have such practical and theoretical knowledge and actual experience of the type of equipment to enable them to carry out the examination
STRENGTH TESTING	the application of an applied load, greater than the max load generated in service but less than that which would cause physical damage, to obtain demonstrable proof that the equipment could safely withstand the service load e.g. hydraulic or pneumatic pressure tests, dead- weight loads, etc.
LEAK TESTING	the application of a pressure differential to detect leaks at such places as expanded, riveted or bolted jaunts, valve seals, welded seams and defects in the material e.g. vacuum test, search gas tests, air tests, and water or service fluid tests.

2) GENERAL

All personnel involved with testing shall be aware of , and trained in, the procedures to be implemented, and familiar with the hazards associated with the activity.
The equipment under pressure shall not be approached for close examination until a reasonable period of time has clapped. The pressure at which the equipment can be approached for close examination shall be specified in the test procedures.
The maximum and minimum temperatures permitted during the test must be determined.
Equipment shall not be subjected to any form of shock loading such as hammer testing during pressure testing operations.
Test equipment must be in sound condition, properly fitted and must be of the correct pressure rating for the job.
Calibrated pressure gauges must be fitted to equipment under test to ensure over pressurizing does not take place and de- pressurizing is completed prior to opening up.
Prior to pressuring, the equipment to be tested must be thoroughly examined e.g. for isolation, drains closed, vent open/ shut as required etc.

3) STRENGTH TESTING

No personnel other than those directly involved in the testing shall be allowed in the test area that must be cordoned off to prevent unauthorized entry. Warning signs are to be strategically posted on equipment being tested and at the perimeter of the test area.
Controls / gauges must be at a safe distance from the equipment to be tested and gauges clearly visible to the operator controlling the pressure.
Strength testing should never be done against closed valves, but only against blinds.
Safety valves of adequate size, properly set, seated and marked with the set pressure, shall be installed in the test supply line to prevent the test pressure from being exceeded.
It shall be established that the fittings used are of the correct specification.
All hot work i.e. thermal cutting, welding, etc. shall be completed and the system mechanical completion certificate shall be made available prior to testing.

4) LEAK TESTING

Leak testing is performed to find leaks. Therefore you must assume that the test medium will leak out of the system being tested. Consequently, wherever possible, the contractor shall use a non- hazardous fluid for the leak test, usually nitrogen or water.
Leak testing either by pressure or vacuum is carried out

- Prior to commissioning equipment that has been out of service.
- As a regular confirmation of the functional integrity and availability of standby or emergency equipment.

Consideration must be given to the possibility of the test pressure leaking past the valves isolating the test section. Precautions to be taken could include

- Opening vents / drains to prevent a pressure build up
- Monitoring pressure gauges on the non-tested sections
- Periodically venting the non-tested sections

The leak test pressure shall be applied gradually in stages, and the equipment shall be checked for leaks at each stage.

Records	Retention Time

Appendix

HSE-M1-P7

WELDING AND FLAME CUTTING

WELDING AND FLAME CUTTING

Department	Document Type	Document Title
HSE	WELDING AND FLAME CUTTING	WELDING AND FLAME CUTTING

Issue Approval	
Prepared By	**Approved By**
Bahaa Eddin Weld Ali *Sr.Safety Engineer*	Dr. Mohammad Al-Sulaity *Manager, HSE*
Signature:	**Signature:**

Issue Record

Issue No.	Date	Reason for re-issuing Procedure
0.0	14/10/2004	First issue of the Procedure.
1.0		
2.0		
3.0		
4.0		
5.0		

Review Frequency : Yearly.

Table of Contents

Contents	Page
Title Page	1
Document Control & Issue Record Page	2
Table of Contents	3
Purpose	4
Scope	4
Responsibilities & Authorities	4
Abbreviations & Terminology	5
GENERAL SAFETY PRECAUTIONS	6
PROTECTIVE CLOTHING AND EQUIPMENT	6
FUME AND GAS RISKS IN WELDING AND CUTTING OPERATIONS	6-7
PREVENTION OF IFRE AND EXPLOSIONS	8
CYLINDER FITTINGS AND ANCILLARY EQUIPMENT	9-10
SAFETY FEATURES THAT MUST BE INCORPORATED IN GAS BURNING /WELDING EQUIPMENT	10
ELECTRIC ARC WELDING/BURNING	10-11
ELECTRODE HOLDERS	11
WELDING LEADS	11
EARTHING AND BONDING	12
STRAY CURRENTS	12

ATTACHMENT

OPTICAL FILTERS FOR ARC RADIATION-A

1. Purpose

The information contained in this part is designed so as to ensure that those personnel responsible for welding and flam cutting are fully aware of precautions to take.

2. Scope

Important factors for the safe execution of electric and gas welding, cutting, brazing. soldering operation are:-

i. Properly trained personnel
ii. Equipment well maintained and functional
iii. Good ventilation and lighting
iv. A tidy work area
v. Adherence to good work practices and safety procedures.

Welding, burning or other operations that generate heat or sparks, e.g.abrasive cutting, in restricted areas shall be carried out under a hot work permit.

3. Responsibilities & Authorities

Line supervisor shall ensure that welding, cutting and other operations that generate heat or sparks, e.g. abrasive cutting, in restricted area shall carried out under a Hot Permit.

4- Abbreviations & Terminologies

LTEL : Long Term Exposure Limit

5- GENERAL SAFETY PRECAUTIONS

All vessels and equipment on which welding, cutting, brazing and soldering work is carried out, must be either free from flammable gases and vapours, and cleaned of all traces of liquid, wax or solid hydrocarbons.
Consideration should be given to the build –up of toxic or flammable gases when vessels and tanks are being welded or burned on the outside, and suitable precautions taken.
Before cutting test holes must first be drilled and gas tests taken.
Ignition of oxy –acetylene or propane torches must only be made using the " Gas Lighters" which are supplied for this purpose.

6. PROTECTIVE CLOTHING AND EQUIPMENT

Personnel engaged in welding, cutting, chipping and grinding operations must wear the appropriate protective clothing/equipment provided, e.g. goggles, face shields, welding helmets, welding screens, gloves, leather aprons etc. other personnel in the vicinity who could be affected by this work shall also wear the required protective clothing /equipment.
Gloves or gauntlets made of leather or some other non-ignitable material are required for shielding the hands and arms from sparks and heat radiation of the welding arc. Sleeves of similar material should be used in addition to gloves if gauntlets are not worn.
The necessity for protective clothing against sparks and pieces of hot metal, depends upon the position of the arc in reference to the welder's body. For some classes of welding, e.g. where the welder is standing at a bench, the head screen and gauntlets may well provide sufficient protection. A thick apron of leather or other suitable material may be needed if the welder is sitting at his work position, where molten metal may fall upon his thighs and legs. If the arc is above the level of his shoulders or overhead, complete protection for head, arms and upper part of the body is necessary.
Apart from eye flash, another common cause of eye injury is the chipping away of slag that covers the weld when coated electrodes are used. In these circumstances a helmet with a double screen should be used, the inner consists of a clear safety glass window, while the adjusted to bring either or both screens into use.
Alternatively, clear glass safety goggles may be worn in conjunction with the use of a hand screen.

7- FUME AND GAS RISKS IN WELDING AND CUTTING OPERATIONS

Welding, cutting, brazing, etc. operations can produce mixtures of fumes and gases, the composition of which depends on the welding temperature, are intensity , electrode material and the gas mixture being used. Many of the fumes and gases produced are toxic.

Where gases/fumes are produced, they must be effectively disposed of either by natural ventilation or forced mechanical extraction ventilation the aim being to draw a way the gas/fume from the operator suitable respiratory protection should be available as a back up to the ventilation system employed in case of inadequate air mixing, or the failure of he forced ventilation system.

Examples of such fumes and gases and how they are produced are as follows

a. Fumes are derived from the volatilization of the electrode and its coating, from the parent metal by grease, paint, etc.

i. The fumes consist of considerable quantities of very fine particles from the electrode coating. The coatings are varied and the particulate given off will depend upon their composition, such as iron oxides, silicates, ferromanganese, and carbonates of sodium, potassium, calcium, magnesium, etc.

ii. The inhalation of many freshly formed metallic oxides, e.g. zinc, chrome, nickel, copper, manganese, etc. may lead to a general illness called " metal fume fever". The most common cause met by welders and others is work on zinc galvanized materials, more particular in confined space situations.

iii. Metal Fume fever is characterized by raised temperature, aching muscles, shivering and sweating. These symptoms develop a few hours after exposure to the fumes and normally disappear after approximately 24 hours.

iv. Cadmium fume, however, is dangerous even when operations take place in open air, Where the welding or cutting of cadmium alloys or cadmium coated materials takes place, suitable respiratory protection must be worn.

b. Gases evolved during welding and cutting may be produced from:-

- Normal atmospheric gases, e.g. nitrogen oxides and ozone.
- Shielding gases, e.g. carbon monoxide from carbon dioxide.
- External Sources.

Some examples are:-

NORMAL ATOMSPHERIC GASES

i. Nitrogen oxides " long term exposure limit " (LTEL), is 5 PPM or 9 mg/m^3 are frequently formed by the combination of atmospheric oxygen and nitrogen by heat of the electric arc or gas torch. In open air or workshop welding, the LTEL is unlikely to be exceeded . within confined spaces a dangerous concentration could rapidly build up, especially with an oxy-gas torch.

ii. Ozone LTEL 0.1 PPM or 0.4 mg/m^3 is formed in small quantities with coated rods in both electric and gas welding. Where gas shielded welding is used, significant amounts of ozone can be formed due to the higher amperage required. Ozone is formed by the action of the ultra-violet light rays on the atmospheric oxygen up to one meter away from the welding arc.

SHIELDED GASES

i. Carbon monoxide LTEL 50 PPM or 55 mg/m^3 is mainly produced when inert gas shielded welding is carried out using carbon dioxide. The ore common source of carbon monoxide is the effect of heat on carbonaceous coatings such as paints, varnishes, etc. on the parent metal being worked upon.
ii. Inert gas welding, especially within a confined space, leads to the reduction of the oxygen content of atmospheric air.

EXTERNAL SOURCES

Phosgene LTEL 0.1 PPM or 0.4 mg/m^3 mainly formed by the action of heat on chlorinated hydrocarbons. Normally encountered when materials that have been sufficiently dried, e.g. decomposition of vapours of trichloroethylene.

Note
As stated trichloroethylene, a commonly used degreasing agent, can decompose during welding (or any heat) to form toxic gases of hydrogen chloride and phosgene, hence the need for degreased material to be a dry state.

Hazards due to the parent metal being worked upon, e.g. lead, copper, cadmium, coblat, etc. from the foregoing paragraphs, it is essential that ventilation and respiratory protection be seriously considered when work of this nature is being carried out.
Where hardened deposits are found on the equipment, welding or cutting must not be started until the general nature of the deposits are established.

8- PREVENTION OF FIRE AND EXPLOSIONS

Welders and helpers must, at all times, be alert to the dangers of fire and explosion. Within restricted areas, no welding or cutting may be done without a hot work permit, and the conditions laid down on that permit must be strictly observed.
Welding booths and screens must be of a fire resistant construction and the interior surfaces should be such as to minimize the reflection of dangerous rays. There shall be means for thorough ventilation.
Work must be screened to prevent sparks from flying outside the immediate welding area and all combustible material must be removed if there is danger of ignition.

When working at a height, precautions must be taken to prevent welding rods and spent stubs from falling. Non/combustible screens must surround the work area to prevent scatter of sparks and hot metal, particular attention being paid to the area immediately below the welding area.
An active fire watch shall be maintained by a nominated person. Whose duty consists of fire watching. This person shall be provided with suitable portable fire extinguishers, and in addition fire blankets and a pressurized fire hose may be provided as necessary depend in on location/site conditions.
Following cessation of work, the work area and any adjacent areas that may be affected shall left in a safe condition.
No fuel or oxygen gas cylinders shall be taken into any confined space. Cylinders, hoses and fittings must be checked for leaks, especially from hoses and fittings within a confined space.
Blowpipe and hoses must not be left in vessels or enclosed spaces, when they are not in use, e.g. after use, during a meal break or over-night.

A very small leak of any gas or oxygen, particularly acetylene, from a torch over such a period can make the atmosphere in the vessel dangerous, where this can no be done, the oxygen and acetylene connections must be disconnected at the cylinders situated out side the vessel. merely closing the valve is not a disconnection.
Work permits must contain the requirement for the testing of the atmosphere for gas and oxygen enrichment following breaks in gas welding operations in confined spaces.
The blowpipe from any oxygen, propane or acetylene cylinder, when alight, must not be hung on the cylinder or regulator.
Welders must never coil hoses around their body when welding.

Whenever equipment is to be left unattended, gas cylinder valves should be shout, electrical power for welding switched off, and any diesel driven welding sets shutdown.

9- CYLINDER FITTINGS AND ANCILLARY EQUIPMENT

Copper in contact with acetylene is liable to form the dangerous explosive copper a cetylid. Therefore, where fittings have to be made up for acetylene supply systems, it is most important that copper of copper-rich alloys of less than 70% copper is used. Where fittings are silver soldered, the solder should contain no more that 40% silver and 20% copper.
Valve and fittings should be kept scrupulously clean, and care taken to ensure no grit or foreign matter is allowed to remain on them. This attention to cleanliness will avoid leaks and the possible build-up of dangerous concentrations of gas.
The use of lead washers or any kind of packing whatsoever in the valve joints is strictly forbidden, packing, particularly lead of copper, tends to get forced into the orifice, causing a blockage , its subsequent extraction is attended by grave risk.
Cylinder having faulty outlet valve connections. e.g. damaged threads, immovable valve spindles, must be returned immediately to stores with a note stating the cylinder number, nature of the fault and whether the cylinder is charged. Under no circumstances may the user of the cylinder attempt any repair what so ever.
Only standard valve keys may be used, and cylinder valves shall always be opened slowly by gently tapping the key. Cylinder valves shall always be closed when the cylinders are empty or not in use.
Keys with long leverage should never be employed to force a valve to close. If the valve leaks when closed it is usually due to grit and this can often be removed by opening the valve slowly and closing it sharply.

Note

Cylinders having leaking valves that cannot be shut off must be removed to a safe area away from any possible source of ignition and drainage systems (propane and butanes heavier than air) and allowed to vent off slowly until empty.
Only automatic pressure regulators and pressure gauges as recommended by the gas cylinder supplier shall be fitted to oxygen and fuel gas cylinders. The adjustable screw on the regulator must always be released before the cylinder is opened. The cylinder valve must be closed before the regulator is removed.
Only high – pressure blowpipes may be used with high – pressure equipment.

All blowpipes shall be dismantled and cleaned internally at regular intervals. Only the manufacturer's recommended tip cleaner, not a hard metal reamer, should be used for cleaning of altering the blowpipe tip.

Accumulated slag should be frequently removed during operation. The blowpipe tip should not be dipped into the molten metal or otherwise blocked up.
Only good quality hose shall be used. Lengths of hose are supplied with the ends firmly attached to nipples having screw unions suitable for connecting to standard regulators and blowpipes. Lengths of hose should be joined by the use of suitable connecting fittings, not jubilee clips. Faulty hoses must not be used.
Unnecessarily long lengths of hose should be avoided. Oxygen and fuel gas hose lengths should be the same.

Note

New hoses are frequently coated with French chalk during storage. Hoses should be blown through with air before being connected to cylinders and blowpipes, to prevent clogging of equipment.
When in use, hoses should be protected from damage, and laid out in such a manner as to avoid being a tripping hazard.
When changing a blow pipe or a gas cylinder, the supply of both gases shall be shut off.

10 - SAFETY FEATURES THAT MUST BE INCORPORATED IN GAS BURNING /WELDING EQUIPMENT

The following safety features must be incorporated

A. Pressure regulators that fitter the gas and provide a constant delivery pressure in accordance with BS 5741:1979 or equal standard.
B. Pressure regulators, which incorporate safety diaphragms that burst before the bonnet is blown off.
C. Pressure gauges with safety backs, which deflect the bursting, gases.
D. Hose check valve (non-return valves) which allow gases to the blowpipe, but not back from it.
E. Flashback arrestors which quench flash back flames and cut off the gas flow automatically, must be incorporated in both oxygen and fuel gas lines.

11 - ELECTRIC ARC WELDING/BURNING

A part from the hazard of fumes and gases, two additional hazards are introduces with electric arc welding, namely radiation from the welding arc, and electrocution. Adhering to simple yet effective safety rules can eliminate these hazards.
Radiation from welding arcs consists of ultraviolet light, infrared rays and visible light. Their effects can be easily remedied. The effects and the protection required are as follows:

a) Ultra-violet and infrared rays are irritating to the skin. producing a condition similar to sunburn. Protective clothing worn will adequately shield the welder.
b) Ultra-voile rays are extremely irritating to the conjunctiva and cornea of the eye, even short exposures to the welding arc produces a condition known as (arc eye) or (eye flash) . It normally appears a few hours after exposures, producing and watering of the eyes. With treatment,

the effect normally wears off after 24 hours. Eye protection must be worn incorporating suitable filters to overcome this problem.

c) Visible light form the arc is so intense that welder eye protection to view the work.

The welder and any helper must protect their eyes with the screens, goggles or spectacles provided. The work must also be effectively screened from other workers in the vicinity.
Regarding electrocution. defective equipment or improper wiring normally causes this. There is also the added danger when working at heights of falling as a result of electric shock.
All welding sets, cables, connectors and terminators must be maintained in good condition, and be of adequate capacity.
Electrical supply and earthling connections to welding transformers and generator sets, must be made inspected and maintained by an authorized/competent electrical person. Inspection of all trailing leads, form a circuit which includes protection sensitive to earth fault currents.
Where stationary transformers or generator sets are being used, a suitable switch must be mounted adjacent to the equipment in order that it may be isolated from the supply main.

12 - ELECTRODE HOLDERS

Electrode holders shall be provided with a handle of though insulating non-ignitable material with a guard disc of similar material between the hand of the operator and the projecting line portion.
A fully insulated holder or hook should be provided to accommodate the live electrode holder when not in use. The practice of laying the live electrical holder on gloves, face screen or hanging it up by the electric cable where it could come in contract with other equipment etc. is to be discouraged.

13 - WELDING LEADS

Portable transformers or generator sets having trailing leads, must be provided with interlocked fused switch sockets and plugs, protecting both trailing cable and equipment.
All welding leads and returns must consist of flexible tough rubber covered cables connected where necessary, by approved cable couplers. All leads shall be properly terminated and lead cable couplers and terminations must be of adequate current carrying capacity.
Welding leads and trailing electrical cables must be inspected daily for any damage. In the case of worn cable sheaths, or flattened badly linked cables, the affected part should be cut out and the cable made good using proper cable couplers.
To avoid long lengths of power cables the machine must be sited as close as possible to the power supply points.
A welding return lead must be provided from the neutral terminal of each phase of an AC welding transformer or the negative terminal of a DC generator to the work piece must be made by firmly bolting or clamping as near as possible to the point at witch welding is to take place.

Where more than one operator is working from the same welding machine, the polarity of each welding lead and welding return must be the same.

When two or mort leads are being used in a confined area, the corresponding leas must be paired, and as far as possible, the crossing of pairs with one another or with any single lead must be avoided.
In instances where welding leads trail near tanks or sumps containing hydrocarbons, additional lengths of cable must be added to the circuit to circumvent the danger area.
Cables should be allowed free ventilation, e.g. they should not coiled up when use.

14 - EARTHING AND BONDING

For all AC welding transformers, the transformer low voltage winding must not be earthed but the transformer case must be effectively bonded to an earthling system adjacent to the equipment.
For all AC driven DC welding generators no earth connection must be applied to either pole of the DC welding output. The machine frame must be effectively bonded to earth.
The work piece must be bonded to earth by means of a heavy section conductor having suitable clamped or bolted connections.
For engine driven Dc welding generators, no earth connection must be applied to the generator out put terminals.
Under no circumstances shall pipelines or structures be used for earthling purposes.

15 - STRAY CURRENTS

Welding return leads must always be used to prevent uncontrolled welding currents passing back from the worksite to the generator through the structure and /or plant items. This could give rise to sparks in a hazardous area, or cause
damage to bearings in machines etc. and particular attention should be paid to welding returns when welding on pedestal crane boons, that currents cannot pass though main slew bearings.
Where butt welding of two items is taking place e.g. butt ends of pipe, both items must be connected to the welding return. Bonding may be effected by the use of mechanical clamps or securely attached spring clips.

ATTACHMENT-A

OPTICAL FILTERS FOR ARC RADIATION

Welding process	Approximate Rang of welding Current (in amperes)	Filter (s) E.W.
Manual Metal Arc (MMA)	Up to 100	8 9
	100 – 200	10 11
SUBMERGED Arc (SA)	Up to 100	10 11
	Over 200	12 13 14
Tungsten Inert Gas (TIG)	Up to 15	8
	15 – 75	9
	75 – 100	10
	200 – 250	11
	250 – 300	12 13 14
Metal Inert Gas (MIG) Metal Active Gas (MAG) (Including Argon and Carbon Dioxide Shielded)	Up to 200	10 11
	Over 200	12 13 14
Flux Cored Arc Welding Including Gas Shielded	Up to 100	8
	100 – 300	9
	Over 300	10 11 12 13 14

Records	*Retention Time*

Appendix

HSE-M1-P8

HANDLING / STORAGE/ USE & DISPOSAL OF GAS CYLINDERS

HANDLING / STORAGE/ USE & DISPOSAL OF GAS CYLINDERS

Department	Document Type	Document Title
HSE	HANDLING / STORAGE/ USE & DISPOSAL OF GAS CYLINDERS	**HANDLING / STORAGE/ USE & DISPOSAL OF GAS CYLINDERS**

Issue Approval	
Prepared By	**Approved By**
Bahaa Eddin Weld Ali *Sr.Safety Engineer*	Dr. Mohammad Al-Sulaity *Manager, HSE*
Signature:	**Signature:**

Issue Record

Issue No.	Date	Reason for re-issuing Procedure
0.0	14/10/2004	First issue of the Procedure.
1.0		
2.0		
3.0		
4.0		
5.0		

Review Frequency : Yearly.

Table of Contents

Contents	Page
Title Page	1
Document Control & Issue Record Page	2
Table of Contents	3
Purpose	4
Scope	4
Responsibilities & Authorities	4
Abbreviations & Terminologies	5
GENERAL IDENTIFICATION CODE	6
SAFE TRANSPORT AND HANDLING	6-7
STORAGE	7-8
DISPOSAL OF CYLINDERS	8
CARE IN THE USE OF CYLINDERS	8
VALVES, REGULATORS AND GAUGES	9
HOSES AND TORCHES	10-11

ATTACHMENT

BS 349C CYLINDER COLOUR CODES-A

1. Purpose

The safe handling, storage , use and disposal of compressed gases is only obtained through strictly following laid down procedures, which if implemented will ensure a safe working environment for those personnel directly involved in the work and those in the immediate vicinity.

2. Scope

The information contained in this part is designed so as to ensure that those personnel responsible for the handling, storage, use, and disposal of compressed gases in cylinders are fully aware of the precautions to take.

This is achieved through:-

- Ensuring only those cylinders which comply with the relevant standards are provided, which are easily identified by the colour coding in force.
- Ensuring precautions are in place to enable the safe transportation and storage of cylinders.

3. Responsibilities & Authorities

It is Line Supervisor Responsibilities for ensuring the safe handling, storage, use and disposal of compressed gases.

4-ABBREVIATIONS & TERMINOLOGIES

LPG : Liquefied Petroleum Gases

5-GENERAL IDENTIFICATION CODE

All gases contained in cylinder are identified by the color or combination of colors painted on the cylinder, the color code used must conform to the British standard specification No's 349 and 1319.

BS349Ccolur coding charts shall be prominently displayed at all stores and locations where gas cylinders are regularly used. (see Attachment A).
As a further means of distinguishing between flammable and non-flammable Gases, the outlets of industrial gas cylinder valves feature screwed 5/8 in BSP thread:-

- Right – hand for oxygen and non-flammable gases.
- Left – hand for acetylene, hydrogen and flammable gases

All filled cylinders shall be examined on arrival to ensure that cylinders are correctly color- coded in accordance with the above BS specification, have been tasted and the date stamped within the past two years.
Cylinders not easily identifiable are not to be accepted and shall be returned to the supplier immediately.
Serial numbers of all cylinders shall be recorded, together with gas identification and dates of issue.
No alteration to the coloring of cylinders is permitted.
Cylinders must only be charged with the gas as indicated by the color coding of the cylinder, under no circumstances must the cylinder be changed from one gas to another.
Cylinders returned for refilling must be accompanied by a written statement indicating:-

- Identification No's
- Cylinder is empty
- Defects (if any)

If a valve is found to be defective it shall be verified by being thoroughly examined by the maintenance mechanical section, labeled defective and returned to the supplier.

6-SAFE TRANSPORT AND HANDLING

Only purpose- designed transport shall be used when possible. Preference is to be given to open vehicles or trailers.

Passengers shall not travel in the same compartment of the vehicle where cylinders (empty or full) are stored for transportation.
Cylinders must be secured, vertical, valves shut and free from leaks.
Cylinders must not project over the sides or rear of the vehicle.
Traveling with equipment attached to the cylinders is prohibited. Protective valve caps are to be fitted where provided.
Drivers shall be properly instructed in the safe handling, loading and transport of cylinders and dealing with emergencies.
Vehicles carrying flammable gas cylinders must carry suitable fire extinguishers and prominently display the relevant warning signs. " No Smoking " and " No Naked Lights" signs.
Cylinder shall not be lifted with magnets or chains. A flat band sling may be used to lift one cylinder at a time provided it is correctly adjusted to prevent slippage.
If more than one cylinder has to be hoisted, a properly designed and certified cradle with chain/ wire suspension shall e used and each cylinder securely fastened.

Cylinders shall never be lifted by their valve cap or guard.

Cylinders shall not be rolled. Purpose built trolleys with the cylinders chained / Secured shall be used for moving the cylinders on the ground.
Oil, grease or other readily combustible substances must be prevented from coming into contact with cylinders of oxygen, their valves or fittings to prevent the risk of explosion.
Fork left trucks may be used to load or off load cylinders onto or from vehicles, by means of a purpose built cradle on which the cylinders shall be mounted.
Cylinders of different gas shall not be mixed together in the same container when being transported.
Oxygen cylinders shall not be transported together with a acetylene or any other flammable materials.

7-STORAGE

Storage of gas cylinders shall be in accordance with " The Highly flammable Liquids and liquefied Petroleum Gases Regulation 1972: No 917 " (UK) and the relevant " Codes of Practice " for compressed gases, as outlined below.

Storage areas shall be purpose-built compounds in the open air, fenced to a height of 2m. The fence shall be made of non-combustible material and shall not inhibit natural ventilation.
Storage areas shall be clearly identified, with the names of the gases stored.
Cylinders should be protected from direct sunlight. Tarpaulins or any other cover must not be used in direct contact with the cylinders.
Cylinders are not to be placed on materials that are likely to cause corrosion of the cylinder base.
No sources of ignition are allowed in storage compounds where compressed flammable gases are kept.
Lighting, instruments, switches and junction boxes in storage compounds containing combustible gas cylinders are to be to class 1, Div.2 standard.
Storage compounds for flammable gases shall have at least two means of exit at opposite ends of the storage area. Gates or doors shall open outwards and shall be open able from inside the store even when locked from the outside.
Suitable fire fighting equipment shall be provided, and in the event of a fire the cylinders shall, if possible, be removed to a safe location.
For quantities of flammable gases less than 300 Kg a lockable wire cage in the open air with a single gate is a adequate, provided there is no risk of persons becoming trapped in the enclosure.
Full and empty cylinders shall be kept a part and " FULL " and "EMPTY" notices displayed accordingly.
Different categories of gas cylinders (toxic, flammable, etc.) shall be segregated and notices displayed accordingly.
Oxygen and oxidants shall not be stored with flammable gases such as acetylene or LPG, but in separate stores/storage compounds at least 6 meters away.
Acetylene and LPG cylinders must never be stacked horizontally in storage or use.
Cylinders shall normally be stored upright and secured so that they will not fall.
Where cylinders contain gases, which permit the storage of cylinders in a horizontal position, large wedges should be used at the end of the stack. Large cylinders shall be placed at the bottom of the stack and the stack shall not be more than 4 cylinders high.

Personnel must not smoke, wear oil- contaminated clothes, or have any naked light in any place where flammable compressed gases are stored (or where oxygen is stored). " No Smoking " and " No naked Light " signs shall be used.
Cylinders shall be kept in good condition, grit, dirt, grease or water shall be prevented from entering them. Storage arrangements shall ensure adequate stock turn- around. Checks for general condition of the cylinders and leakage shall be made.
Storage compounds must have appropriate warning signs located so that persons entering and working adjacent are aware of the gases stored and the safety precautions to be applied.

8-DISPOSAL OF CYLINDERS

Unwanted or empty cylinders shall be returned to suppliers for reuse. Damaged cylinders shall also returned to suppliers or similar for re-cycling.

9-CARE IN THE USE OF CYLINDERS

Cylinders shall not be used as rollers supports or for any other purpose than to contain the gas as supplied.
When in use cylinders shall, whenever possible, be clamped vertically in a suitable trolley . if removed from the trolley they shall be secured to prevent toppling.
Cylinders must not be allowed to come into contact with electrical apparatus, especially arc welding tools, or live wires, since arcing may be set up which will heat or damage the cylinders.
Cylinder must be kept clear from sparks, flames or slag from welding or cutting operations.
Every effort shall be made to avoid leakages. Tests shall always be made with soapy water and a brush and NEVER by means of a naked flame.
In a confined space all gases are potentially hazardous, whether they are toxic and/or flammable, asphyxiating or, as in the case of oxygen, capable of increasing the risk of fire. The importance of good ventilation cannot therefore be over stressed.
Taking cylinders into confined spaces shall be avoided where ever possible. Only hoses and torches shall be taken in and cylinders left outside. Neither hoses, torches or cylinders when they have to be taken inside the confined space shall be left unattended inside the confined space during meal or other breaks.
Personnel shall not lubricate any valve or fitting.
Joint fittings or piping made of copper shall on no account be used with acetylene. Acetylene shall never be allowed to come into contact with copper or any alloy containing more than 70% copper.
The main cylinder valve shall always be shut off when work has to be stopped for more than a few minutes or when the cylinder is empty.
Cylinders shall be removed from working areas and put back into the store at the end of the working period.

10-VALVES, REGULATORS AND GAUGES

Valves shall always be opened slowly. The main cylinder valve closes is a clockwise direction. Irrespective of whether the cylinder contains a fuel gas or anon- combustible gas.

An open valve shall be left a half turn back from full open so that movement to the back stop indicates the valve is open.
The valve should be closed clockwise sufficient to stop the gas flow, but not wrenched shut.
If the valve spindle is too stiff to open by hand or is damaged or broken, the cylinder shall be returned to the supplier.
Cylinders shall not be moved from place to place with regulators and hoses fitted, unless a proper trolley or carrier is used. The main cylinder valve shall always be kept shut during tan sit and valve protection guards or caps shall be fitted.
Needle valves shall never be used in place of a regulator .
Use needle valves for fine adjustment only downstream of the pressure regulator.
Welding or cutting apparatus shall not be used unless automatic pressure regulators are fitted to oxygen and fuel gas cylinders.
The adjusting screw for regulating the outlet pressure shall be set to zero prior to fitting a pressure regulator onto a full cylinder.
Cross-threaded connections shall never be forced, and worn threads, jointing compound or tape shall not be used.
Pressure gauge threads shall be checked for wear or defects prior to work on the cylinder assembly head.
Where cylinders are connected to manifolds or headers, the equipment must be properly designed and installed , and fitted with one or more pressure regulators.
No attempt must be made to interchange regulators. Each is designed for use with a specific gas and should be market accordingly.
Only pressure gauges recommended by the manufacturer shall be used. If the gauge attached to a regulator is defective the complete regulator shall be exchanged.
Gauges for oxygen shall be marked " OXYGEN" and must not be tested for leaks with oil-always, with soap and water.
Gauges used to show content of oxygen, nitrogen and hydrogen cylinders shall have a maximum dial reading of not less than 225 bar (3260 lb./in^2).
Gauges used to show the contents of acetylene cylinders shall have a maximum dial reading of not less than 40 bar (530lb./in^2).

11-HOSES AND TORCHES

Only hose that conforms to BS5120 shall be used to connect the torch to the gas cylinders.

Hoses shall conform to the accepted color coding set out in BS 3212 and BS 5120. in particular the following colors apply:-
Blue – Oxygen
Red - Acetylene
Orange – propane
Lengths of hose shall be supplied with ends firmly crimped to nipples having screwed unions suitable for connecting to standard regulator outlets and torch inlets. Makeshift connections shall on no account be used.
Lengths of hose shall be kept as short as possible. Hoses shall only be joined using approved coupling, which shall be dismantled when the job is complete.
Non-return check valves shall be fitted to each hose at the torch.
Flashback arrestors designed to quench the flash back and release pressure shall be fitted to both fuel gas and oxygen regulators.
Flash back arrestors shall be tested and replaced in accordance with the manufacture's instructions.
Cut-off valves shall also be incorporated for automatically shutting off the gas supply.
Hoses shall not be dragged around sharp corners or placed where they can be run over by vehicles.
Hose connections, hoses and torches shall be inspected at least daily before use, damaged / defective hoses shall not be repaired, they shall be replaced/ renewed.
Torch nozzles shall be examined regularly. Blocked nozzles should be cleaned as recommended by the manufacturer or be exchanged by the equipment supplier.
Cylinders shall not be used to support the work, nor shall the torch flame be allowed to come into contact with the cylinder.
The torch, when alight , shall not be hung on the cylinder or the regulator, and shall never be left burning unattended.

Attachment-A

BS 349C CYLINDER LOLOUR CODES

Gas		Ground colour of cylinders	Colour of bands
Name	**Symbol**	**Nominal**	**Nominal**
Acetylene	$C_2 H_2$	Maroon	None
Air	-	Grey	None
Ammonia	NH_3	Black	Red & Yellow
Argon	A	Blue	None
Carbon Dioxide for temp.use	CO_2	Black	None
Carbon Monoxide	CO	Red	Yellow
Chlorine	CL	Yellow	None
Coal Gas	-	Red	None
Ethylene	$C_2 H_4$	Violet	Red
Ethylene Oxide	$C_2 H_4 O$	Violet	Red & Yellow
Helium	He	Brown	None
Hydro Cyaric Acid	-	Blue	Yellow
Hydrogen	H	Red	None
Methane	CH_4	Red	None
Methyl bromide	CH_3 BR	Blue	Black
Methyl Chloride	CH_3 CL	-	
Inflammable Flammable	- -	Green Green	Red None
Neon	NE	Brown	Black
Nitrogen	N	Grey	Black
Oxygen	O	Black	None
Phosgene	$COCL_2$	Black	Blue & yellow
Propane	-	Red	None
Sulphur Dioxide	SO_2	Green	Yellow
Sulphur Hexa Fluoride	SF6	Green	None

Records	Retention Time

Appendix

HSE-M1-P9

LABORATORY SAFETY

LABORATORY SAFETY

Department	Document Type	Document Title
HSE	LABORATORY SAFETY	LABORATORY SAFETY

Issue Approval	
Prepared By	**Approved By**
Bahaa Eddin Weld Ali *Sr.Safety Engineer*	Dr. Mohammad Al-Sulaity *Manager, HSE*
Signature:	**Signature:**

Issue Record

Issue No.	Date	Reason for re-issuing Procedure
0.0	14/10/2004	First issue of the Procedure.
1.0		
2.0		
3.0		
4.0		
5.0		

Review Frequency : Yearly.

Table of Contents

Contents	Page
Title Page	1
Document Control & Issue Record Page	2
Table of Contents	3
Purpose	4
Scope	4
Responsibilities & Authorities	4
Abbreviations & Terminologies	5
PROTECTION OF PERSONNEL	6
STORAGE AND HANDLING OF CHEMICALS	6
VENTILATION	6
FIRE FIGHTING EQUIPMENT	6
DISPOSAL OF WASTE	6
SAFETY PROCEDURES	6-7
BE PREPARED FOR EMERGENCIES	7

1. Purpose

The purpose of this part is to ensure

2. Scope

Design of laboratories for electrical area classification, ventilation systems, fire protection, waste disposal, etc. may be found in the national fire protection association (NFPA) standard no. 45, fire protection for laboratories using chemicals. The following regulations, however, are restricted to the hazards, which are more typical of chemical laboratories.

3. Responsibilities & Authorities

The Line Supervisor responsibility to ensure that all employees who come into contact with laboratories are fully aware of the hazards and precautions to take in order to ensure that safe systems of work are achieved.

4-ABBREVIATIONS & TERMINOLOGIES

NFPA : National Fire Protection Association

MSDS : Material Safety Data Sheet

5-PROTECTION OF PERSONNEL

The protection of laboratory personnel is particularly important due to the handling and presence of hazardous chemicals.
Personnel protective equipment shall be provided and used as per the requirement contained in part no **4**of this manual.
Safety showers, eye, and face washers or fountains shall be provided at all laboratories for immediate use of personnel accidentally contacting acid or caustic materials. An audible alarm shall alert personnel in the area that a shower or fountain has been activated. Source of water shall not be exposed to the sun, resulting in extreme discomfort when used.

6- STORAGE AND HANDLING OF CHEMICALS

The quantity of hazardous chemicals and substances, e.g. fuming acids, flammable liquids and gases, whether of samples or reagents within a laboratory shall be as small as practicable and stored in enclosed metal cabinets. Flammable solvents stored in drums shall be located outside the main building. The control of substances hazards to health, as contained in part no **19** this manual shall be complied with.

7- VENTILATION

Where flammable vapours may be released, a ventilation system shall be installed to prevent the accumulation of hazardous vapours. As a minimum, the ventilation system shall meet the requirements of NFPA 45 . six to eight air changes per hour are usually recommended.

8- FIRE FIGHTING EQUIPMENT

Extinguishers shall be located in obvious and readily accessible positions and shall be inspected and tested at regular intervals. All laboratory staff shall be instructed in the use of the various types of extinguishers provided and the types of fires. Which they are suitable.
Extinguishers shall be recharged immediately after use, even if only part of the contents have been used. Means shall provided for reporting any outbreak of fire, and personnel shall be made aware of the system. A manually operated alarm system is recommended.

9- DISPOSAL OF WASTE

A special drainage system provided with vapour seals shall be installed and used for the disposal of flammable liquid. The disposal of other waste materials shall be made with care and subject to their nature.

10- SAFETY PROCEDURES

It may seem that working safely in a lab requires a great many precautions. But most of these precautions are either engineering controls like ventilation or procedures that are basically common sense.
Speaking of common sense, one of the most important ways to prevent accidents while doing your job is simply to be alert. If you spot anything that is or might be unsafe ,or just doesn't seem " right" , report it immediately so that any problems can be corrected.

Another essential part of common sense lab safety is personal hygiene. When you work in a lab, these hygiene practices should be habits that are apart of your routine:-

a. Don't eat, drink, smoke , chew gum, or apply cosmetics in areas that contain lab chemicals.
b. Wash hands before any of these activities.
c. Don't store handle food , beverages, or utensils in lab chemical storage areas or in refrigerators that also use for chemicals.
d. Don't drink from lab glasses.
e. Always wash areas of exposed skin carefully before you leave the lab.
f. Don/t use mouth suction to pipette or start a siphon.
g. Don't smell or taste chemicals.

Housekeeping is another area where common sense procedures go a long way toward keeping lab safe.
Accidents are a lot less likely when the work area is clean and uncluttered, with all chemicals and equipment properly labeled and stored. Don't store materials, even temporarily , in hall ways or on the floor where people could trip over them. Never block exits or emergency equipment.

11-BE PREPARED FOR EMERGENCIES

No matter how careful you are, work that involves hazardous chemicals always has the potential for accidents. If there is an emergency , whether it's a hazardous exposure, a spill, afire, etc., it's important that you know who to contact and what to do.

The names and phone numbers of people to contact in an emergency are located (location).
Any spill should be leaned up promptly and properly by people who know what they are doing.
Fire extinguishers are located.
Your evacuation route in case of an emergency is (explain).
If anyone is, by some chance, exposed to hazardous chemical, take a appropriate first aid action promptly.
Check the MSDS for the substance involved for instructions.
In most cases , you will probably follow these procedures:-
For eye contact, go to the eyewash located (location) immediately, flash eyes with water for at least 15 minutes and then get medical attention.
For swallowing, check the MSDS.
For inhalation, get to fresh air and get medical attention.
For skin contact, wash the affected area immediately and thoroughly with water remove contaminated clothing and dispose of it properly, then get medical attention.

Records	Retention Time

Appendix

HSE-M1-P10

Scaffolding

Scaffolding

Department	Document Type	Document Title
HSE	scaffolding	scaffolding

Issue Approval	
Prepared By	**Approved By**
Bahaa Eddin Weld Ali *Sr.Safety Engineer*	Dr. Mohammad Al-Sulaity *Manager, HSE*
Signature:	**Signature:**

Issue Record

Issue No.	Date	Reason for re-issuing Procedure
0.0	14-10-2004	First issue of the Procedure.
1.0		
2.0		
3.0		
4.0		
5.0		

Review Frequency : Yearly.

Table of Contents

Contents	Page
Title Page	1
Document Control & Issue Record Page	2
Table of Contents	3
Purpose	4
Scope	4
Responsibilities & Authorities	4
Abbreviations & Terminology	5-6
MATERIALS STANDARD, INSPECTION AND RECORDING 5.1 STEEL TUBES AND FITTINGS 5.2 ALUMINIUM TUBING 5.3 SCAFFOLD BOARDS	7
STANDARD SCAFFOLDS (ATTACHMENT F) 6.1 FIRM FOUNDATION 6.2 JOINTED STANDARDS AND LEDGERS 6.3 FIXING OF LEDGERS TO STANDARD AND TRANSOMS, OR PUTTOGS TO LEDGERS 6.4 BRACING 6.5 STABILITY 6.6 SAFE WORKING P;ATFORMS 6.7 SAFE LADDER ACCESS (SEE ATTACHMENT-G)	7-8-9
ERECTION, ALTERATION AND DISMANTLING 7.1 ERECTION 7.2 ALTERATION 7.3 DISMANTLING	9-10
INSPECTION, MAINTENANCE AND REGISTERS	10
TAGGING SYSTEM (SCAFFTAG PROCEDURE) –SEE ATTACHMENTS H,I,J	11
SPECIAL SCAFFOLDS 10.1 TOWER SCAFFOLDS (ATTACHMENT – G)	12
RELEVANT CODES AND STANDARDS	13

Form

SCAFFOLD INSPECTIONS

Attachment –B : SCAFFOLD FITTNGS
C: SCAF FOLD FITTNGS
-D: THROUGH TIE FOR INDEPENDENT TIED SCAFFLOD
E: INDEPENDENT TIED SCAFFOLD – COLUMEN BOX TIE
F: STANDARD SCAFFOLDS –INDEPENDENT & PUTLOG

1. Purpose

Where work cannot safely be done from the ground or from part of a structure, then scaffolding must be provided, unless the use of a ladder or other means of support, such as a mechanical access platform is appropriate, however ladders can only used for work of short duration.

2. Scope

The information contained in this part is designed so as to ensure that scaffolds are designed, erected, maintained and inspected, and will provide a means of access and working place which shall be as safe as those found in existing structure and on permanent structures. This is achieved through :_

- Ensuring scaffold materials used are up to the relevant standards, are inspected by a qualified inspector prior and during use and the result recorded to ensure accountability.
- Ensuring " scafftag " system is in use, where by all scaffolds are inspected by a qualified inspector prior to use for their stability, loading and suitable for the work to be alteration or adverse weather conditions.

3. Responsibilities & Authorities

It is Line Supervisor Responsibilities to ensure that scaffolds are designed, erected, maintained and inspected in a safe manner.

4- Abbreviations & Terminologies

Base plate	A metal plate with a spigot for distributing the load from a standard or raker or other load bearing tube.
Bay	The space between the center lines of two adjacent standards along the face of a scaffold
Brace	A tube placed diagonally with respect to vertical or horizontal members of a scaffold and fixed to them to afford stability.
Brace coupler	A coupler used for fixing braces, which may be a right angle coupler or any other coupler of sustaining a safe working load of 5KN.
Brick guard	A metal or other fender filling the gap between the guard-rail and to board, and sometimes incorporating one or both of these components.
Check coupler or safety coupler	A coupler added to a joint under load to give additional security to the coupler(s) carrying the load.
Competent scaffolder	A trained, qualified, and skilled person with assigned duties to perform scaffold erection, alteration, dismantling, or staging in a safe manner. His tasks are performed under the supervision of a foreman scaffolder.
Coupler	A component used to fix scaffold tubes together.
Foreman scaffolder	A trained, qualified, and experienced person with assigned duties, but not limited to , the supervision of scaffold erections, alteration, dismantling, or staging in a safe manner.
Guardrail	A member incorporated in a structure to prevent the fall of a person from a platform or access way.
Joint pin	An expanding fitting placed in the bore of a tube to connect one tube to another coaxially.
Ledger	A longitudinal tube normally fixed parallel to the face of a structure in the direction of the larger dimensions of the scaffold. It acts as a support for the putlogs and transoms and frequently for the tie tubes and ledger braces and is usually jointed to the adjacent standards.
Lift	The assembly of ledgers and Tran sours forming each horizontal level of a scaffold.
Parallel coupler	A coupler used to join two tubes in parallel.
Putlog	A horizontal tube with a flattered end, to rest in or on part of the brick work or structure.
Putlog coupler	A coupler used for fixing a putlog or transom to a ledger, or to connect a tube used only as a guard-rail to a standard.
Reveal pin	A fitting used fro tightening a reveal tube between two opposite surfaces.
Reveal tube	A tube fixed between two opposite surfaces by means of a threaded (expanding) fitting or by placing it across an opening in structure to form an anchor to which the scaffold may be tied.

Right angle coupler	A load-bearing coupler used to join tubes at right angles.
Scaffold	A temporary structure which provide access, or from which person work, or which is used to support materials, plant or equipment.
Scafftag	Is a simple means of indicating whether or not a scaffold is safe to use and at the same time provides various other information to help prevent overloading ,etc.
Sleeve coupler	An external coupler used to join one tube to another coaxially.
Sole plate	A timber, concrete or metal spreader used to distribute the load from a standard or base plate to the ground.
Standard	A vertical or near vertical tube, which carries the scaffold's weight and loads imposed to the supporting structure.
Swivel coupler	A coupler used for joining tubes at an angle other than a right angle.
Tie or tie assembly	The components attached to an anchorage, or the structure, or framed around a part of it, or wedged or screwed into it with a tie tube . used to ensure the scaffold to the structure.
Toe board	An up stand at the edge of a platform, intended to prevent materials or operatives feet from slipping off the platform.
Transom	A tube spanning across legers to form the support for boards or units forming the working platform or to connect the outer standards to the inner standards.
Universal coupler	A load- bearing coupler used for connecting two tubes together at right angles or in parallel.
Working platform	The deck from which operations are carried out .

5- MATERIALS STANDARD, INSPECTION AND RECORDING

5.1 steel tubes and fittings

- All steel tubing, couplers and fittings used for scaffolding shall conform to British standard specification no BS 1139 or acceptable equivalent.
- Tubes shall be straight, free from cracks, splits, surface flaws and other defects. The ends of the tubes shall be cut clean and square.
- All couplers and fittings shall be properly oiled and maintained. Nuts shall have a free running fit on their bolts. Bolts with worn or damaged threads shall be replaced.

5.2 aluminum tubing

- aluminum tube shall not be mixed with steel tube or steel fittings due to different loading and the fact that steel fittings could crush aluminum tube.
- Aluminum tube shall not be used if bent more than 15 mm in any 3m length.
- Aluminum tube shall not be straightened, the straight parts of the tube may be cut out and reused, but the remainder shall be disposed of.
- Aluminum tube shall not be heated by welding or flame cutting etc.

5.3 scaffold boards

- all scaffold boards shall comply with British standard specification no BS 2482 or acceptable equivalent.
- Standard boards are normally 225 mm wide and 37 mm thick.
- Boards shall not be painted or treated in any way, which shall conceal defects in them.
- The ends of all scaffold boards shall be bound and protected by metal hoops.
- Boards shall not be split up more than 300 mm from the end with the metal hoop fixed and shall not be decayed or warped by more than 12mm .
- The parts affected may be cut out to obtain shorter boards that shall also comply with BS2482 or acceptable equivalent.

6-STANDARD SCAFOLDS (ATTACHMENT F)

Un sheeted scaffolds up to 50 m high may be constructed without being specifically designed, provided they comply with the requirements outlined below and do not carry greather loads. Or have greather bay lengths than those specified in BS5973 or acceptable equivalent.
Where sheets are to be added to a scaffold to afford protection to operatives or the work, the scaffold shall be specifically designed with consideration given to the wind forces to which it will be subjected.
When a temporary roof is to be fixed to the top of an access scaffold, the scaffold and its attachment shall be specifically designed.

6.1 firm foundation

all scaffolds shall be erected on affirm level and consolidated base. No excavation should be carried out near to any scaffolding supports.
Base plates shall be used below each standard on surfaces where there is the possibility of standards deforming the surface.

On surfaces which shall be penetrated by base plates which support standards, sole plates of timber shall be used beneath the base plates in order to achieve a greather distribution of the load.

Sole plates shall be at least 35mm thick and 219 mm wide. The sole plate area beneath any one standard shall be at least 1.000 cm^2 but, if the ground is soft or has been disturbed, this area shall be increased to 1.700 cm^2>

6.2 Jointed Standards and Ledgers

a mixture of longer and shorter tubes shall be used when constructing long ledgers or tall standards.
Joints is completed scaffolds shall not occur in adjacent standards in the same lift and joints in adjacent ledgers shall not occur in the same bay.
Joints in standards shall be made either with joint pins or with sleeve couplers, and shall be positioned near ledgers.
Joints in ledgers shall be made with sleeve couplers and shall be positioned at a distance not more than one third of the span between adjacent standards.

6.3 Fixing of Ledgers to Standard and Transoms, or Putlogs to Ledgers

ledgers shall be fixed to standards with right angle couplers.
Transom shall be fixed adjacent to every standard in every lift of a scaffold by means of right angle couplers.
Intermediate board-bearing tubes may be fixed to ledgers by putlog couplers.

6.4 Bracing

bracing shall be in the form of ledger or cross bracing and longitudinal or façade bracing.
Ledger bracing shall be positioned at alternative standards in a scaffold and each brace shall run form a ledger in one lift to the diagonally opposite ledger the lift above.
Longitudinal bracing shall be in the form of a zigzag arrangement of tubes running from the bottom to the top of the scaffold between a pair adjacent standards.
Or
A continuous tube running from the bottom to the top of the scaffold at an angle of between 35 and 55 to the horizontal.
Or
Individual tubes running from the bottom to the top of the scaffold between a pair of adjacent standards, all sloping the same way.
Bracing assemblies shall be fixed along the face of the scaffold at intervals not exceeding 30m.

6.5 Stability

The prevention of inward and outward movement of a scaffold shall be achieved with ties to the façade at a number of points.
Only one tie shall be temporally removed and this shall be replaced before removing another.
Ties shall be staggered in location wherever the building surface permits.
Tie working loads:
Box, lip or through ties ------ 6.25 KN

Reveal ties ---------- 3.5 KN
Drilled in anchor ties ----------6.25 KN or as recommended manufacturer
Each tie assembly for sheeted scaffolds shall have at least a 12.5 KN capacity.

6.6 Safe Working Plat forms

all boards that make up the platform shall rest squarely and evenly on correctly spaced transoms, and be secured to prevent accidental displacement.
All boards shall be of the same thickness.
Each board shall have at least three supports unless its thickness or span is enough to prevent sagging under load.
The maximum spacing is related to board thickness:-

Board Thickness	Spacing
32mm	0.990
40mm	1.520
51mm	2.590
63mm	3.250

No board shall overhang its end support by more than four times its thickness, the minimum overhang shall be at least 50 mm.
Where men have to sit at the edge of the platform between the structure, the gap between the platform and structure shall not exceed 300mm.
Guardrails and toe boards shall be positioned at every edge from which a person is liable to fall more than 2m.
Guardrails shall be fixed on the inside of standards at a height of between 910mm and 1.15m above the level of the platform.

An intermediate guardrails shall be fitted midway between the guardrails and the top of the toe board on all working platforms from which person may fall a distance of 2 meters, except for platforms used only for the passage of persons.

Toe boards shall be fixed on the inside of standard and shall be at least 150mm high.

The distance between guardrails and toe boards shall not exceed 765mm.

6.7 Safe Ladder Access (see Attachment-G)

Access ladders shall stand on firm and level bases at an angle of 4 units vertical to 1 unit horizontal (that is 75° to the horizontal) , they shall be secured by their stiles to the platforms to which they give access to prevent movement.
Ladder clamps or lashings shall be used to secure ladders in place.
Ladders shall project at least 1m above the landing place, having one rung level with or slightly above the landing.
Ladders shall be placed inside a scaffold wherever possible, and landing places shall be provided at vertical intervals of no more than 9.0m.
The edges of landing places shall be provided with guardrails and toe boards.
The opening in landings, through which the ladders pass, shall not exceed 500 mm in width.

7-ERECTION, ALTERATION AND DISMANTLING

Erection, alteration and dismantling of a scaffold shall only take place by competent scaffolders under the supervision of the foreman scaffolder.

Scaff tag holders of warning notices stating " Prohibition – scaffold incomplete-do not use " (see tagging system and scaff tag procedure section 8- and attachments H,I,J) shall be attached to all approved access points of a scaffold which are incomplete and not for use during erection, alteration and dismantling.

7.1 Erection

The erection sequence of a scaffold shall ensure that at no time will the scaffold reach an unstable condition.
Ties shall be fixed in place as erection proceeds, not when the caffold is complete.

7.2 Alteration

All modifications to existing scaffolding shall be carried out in such a way that the stability of the scaffolding is not impaired.
Supplementary components shall be added before those which have to be removed are taken away .
If standards are to be removed in order to provide access, additional standards shall first be fixed to both sides of the proposed opening so that the total number of standards in the scaffolds is never reduced.

7.3 Dismantling

Prior to dismantling a scaffold, the scaffold shall be inspected and a safe procedure for dismantling is established by the foreman scaffolder.
During dismantling, no component, the removal of wich would endanger the scaffold, shall be removed until steps have been taken to compensate for its removal . No items shall be thrown to the ground-lowering by hand only.
If dismantling has reached the stage at which a critical member has to be removed, the stability of the scaffold shall be ensured by fixing a similar component in place lower down the scaffold.

8-INSPECTION, MAINTENANCE AND REGISTERS

Prior to erection, the foreman scaffolder, in charge of the works, shall inspect the ground area upon which the scaffold is to be positioned, and shall inspect all equipment which shall form any part of the scaffold staging, means of access, work platform and lifting gear, Such inspections shall also be required daily during use.
The foreman scaffolder shall appoint a competent scaffolder (s) to be solely responsible for maintenance works on scaffolds and staging.
Prior to persons being allowed to use scaffolds or staging or where they are altered, adjusted or subjected to rain or heavy winds, and thereafter at least every seven days, the qualified inspector shall inspect the scaffold inclusive of peripheral equipment.

On satisfactory inspection the inspector will sign and date the reverse side of the scafftag status (see attachment –I) and shall record his findings in the " Scaffold Inspection Register ' (attachment – A)

9-TAGGING SYSTEM (SCAFFTAG PROCEDURE) –see attachments (H,I,J)

Scaffold under construction

During construction the foreman scaffolder or competent scaffolder must fix scafftag holders to all approved access points to the scaffold.

When the scaffold is incomplete, the scafftag holder showing the international prohibition symbol and the script " **DO NOT USE SCAFFOLD**" will be showing (see attachment – H) > The information will apply to all personnel not involved in the scaffold construction. All the scafftag holders and inserts should be weatherproof.
Construction Complete:-
When construction is complete the scaffold is inspected to ensure compliance with statutory legislation and codes of practice. If satisfied the qualified inspector completes the green faced scafftag,which means the scaffold is **" SAFE FOR USE "**
The status scafftag contains the following data:
(see attachment –I)

i. Date erected, with name competent scaffolder.
ii. Maximum loading in KN/m^2 or in Kg/m^2 , (see the table below for different types of scaffold and typical loads)
iii. Date inspected, with name and initials of qualified inspector.

Type of scaffold and typical load

Type of scaffold	Use of scaffold	Scaffold loading per m^2	Typical load
Very light duty	Inspection access and painting	75Kg	1man + tools no materials
Light duty	Power cleaning, painting, light engineering.	150Kg	2 men + tools no materials
General purpose	Light engineering e.g. welding or electrical	200 kg	2 men + 175 Kg materials
Heavy duty	Heavy engineering e.g. large pipe work or structural	250 Kg	2 men + 250 Kg of materials
Special purpose	To be stated on design drawings		

On alteration or modification

On going inspections will need to be carried out every seven days or after adverse weather conditions to confirm the scaffold is safe for use to comply with statutory requirements.

On satisfactory inspection the qualified inspector will sign and date the reverse side of status scafftag and update the scaffold inspection register.

If the scaffold is found un safe at any time, the status scafftag to be removed from holder and be replaced by the prohibition insert **" DO NOT USE SCAFFOLD"** and remains in that new situation until remedial works have been carried out and the scaffold is satisfactory re-inspected **" SAFE TO USE "** or the scaffold is dismantled.

It is the responsibility of scaffold user to ensure the scaffold is showing " **SAFE TO USE**" and within the inspection dates. Any scaffold found not to have a scafftag in place, overdue inspection or in the prohibition state must be reported for revivification.

10-SPECIAL SCAFFOLDS

All scaffolds over 50m high and all sheeted scaffolds over 25m high, together with hanging , bridging, birdcage, truss- out, slung, cantilever scaffolds, hoist towers, loading bays and protection fans, shall be designed by a competent civic engineer in accordance with the requirements of British standard specification No BS 5973 or acceptable equivalent.
The engineer shall provide a written erection and dismantling procedure together with the scaffold drawing and his design calculations.

After erection and prior to work commencing up on the scaffold, the engineer shall inspect the scaffold with the foreman scaffolder and the qualified inspector who shall approve the scaffold and record his inspection in the " scaffold inspection register " and Tag" the scaffold.

10.1 Tower Scaffolds (Attachment –G)

Scaffold towers shall only be erected and used on firm level ground.
Static towers shall have metal base plates under the standards, and , unless the foundation is concrete, the load shall be spread by timber sole plates.
Wheels, or castors, on mobile towers shall not be less than 125 mm in diameter. Castors shall be fixed into the base of the standards and be fitted with brakes that cannot accidentally be released.
Where joints in standards are necessary, they shall be made with sleeve or parallel couplers.
Ledgers and transoms , at right angles to the standards, shall commence not more than 150 m from the bottom to provide a firm base clear of the castors.
Lifts shall not exceed 2.7m on static or mobile towers .
Bracing shall be fixed to ledgers and transoms with right angle couplers in the forms of :-
Plan bracing, i.e. diagonally at the base and working platform, and also at alternative lifts.
Diagonal bracing in zigzag fashion to the full height of the tower on all four sides.
The maximum height to which a static or mobile tower shall be erected is calculated be low.
The second figure is each ratio represents the smaller of the tow base dimensions of the tower.

Type of tower	Height/ base ratio
Static tower used indoors	4:1
Static tower used outdoors	3.5:1
Mobile tower used indoors	3.5:1
Mobile tower used outdoors	3:1

Maximum height of tower scaffolds
The maximum height established shall be the height to the working platform, not to the guardrail.

The maximum freestanding height for mobile towers shall be 9.6m and , for static towers, 12m.
Where the maximum free-standing height or the maximum recommended height to the base ratio requires to be exceeded or the tower is likely to be exposed to appreciable wind loading, the scaffold shall be tied to the structure it is serving , or designed to ensure stability by means of ground anchors, guys or krentlege.
A Ladder for access purposes shall be lashed vertically to one of the narrow sides inside the base area, with the foot resting on an additional transom.
A ground standing ladder shall be prohibited on mobile towers.
The ladder shall extend at least 1,00 m above platform level to provide handhold at the stepping off point.
A ladder or trestle shall not be placed on the top platform to extend the height of the tower.

Mobile towers shall have their castors turned outwards to provide maximum base dimensions and the brakes locked "on" when the scaffold is in use.
Mobile towers shall be moved only by pulling or pushing at the base.
No one should be on any part of the scaffold whilst it is being moved.
Working platforms shall be clear of persons and materials before towers are moved.

11-RELEVANT CODES AND STANDARDS

British standard specification No BS1139: Metal scaffolding
British standard specification No.BS2482: specification for timber scaffold boards.
British standard specification No BS5973:Code of practice over access and working scaffolds and special scaffold structures in steel.

Form-1

Name of contractor

---

address of site ----------

---

work commenced Date

SCAFFOLD INSPECTIONS

Location and description of scaffold, etc. and other plant or equipment inspected	Date of inspection	Result of inspection state whether in good order	Name and signature of person who made the inspection

Short check – at each inspection check that your scaffolding does not have these faults:

		week 1	2	3	4
FOOTINGS	Soft and uneven no base plates no side boards undermined				
STANDARDS	Not plumb joined at same height wrong spacing damaged				
LEDGERS	Not level joint in same bays loose damaged				

		week 1	2	3	4
BRACING FAÇADE AND LEDGER	Some missing loose wrong fittings				
PUTLOGS AND TRANSOMS	Wrongly spaced loose Wrongly supported Wrongly fittings loose Damaged				
COUPLINGS	No check couplers Wrong space Wrong coupling Week support				
BRIDLES					

		week 1	2	3	4
Ties	Some missing loose				
Boarding	Bad boards Trap boards Incomplete Insufficient Supports				
GUARD & RAIL TOE BOARD	Wrong height loose Some missing				
LADDERS	Damaged Insufficient length Not tied				

Attachment –B : SCAFFOLD FITTNGS

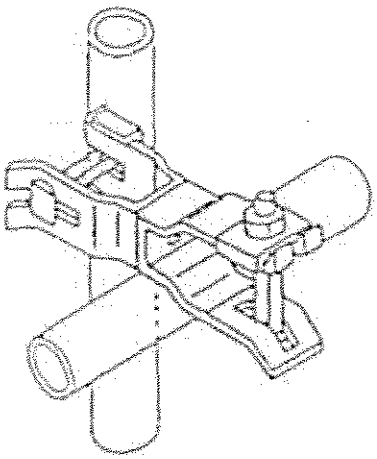

SWIVEL COUPLER

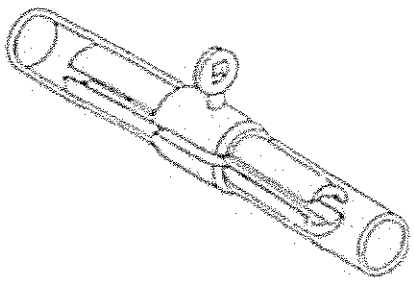

JOINT PIN

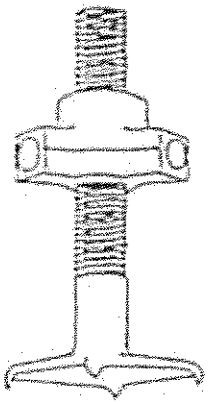

REVEAL PIN

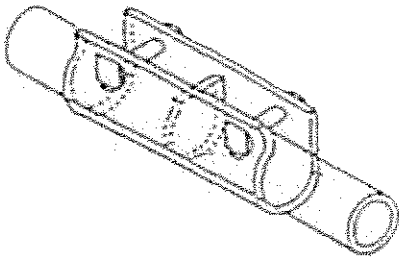

SLEEVE COUPLER

Attachment-C: SCAF FOLD FITTNGS

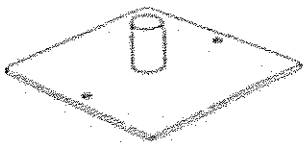

BASE PLATE

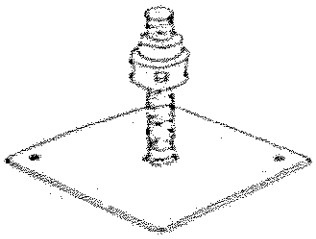

ADJUSTABLE BASE PLATE

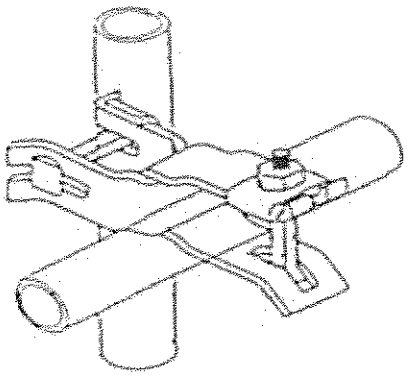

RIGHT-ANGLE COULPER

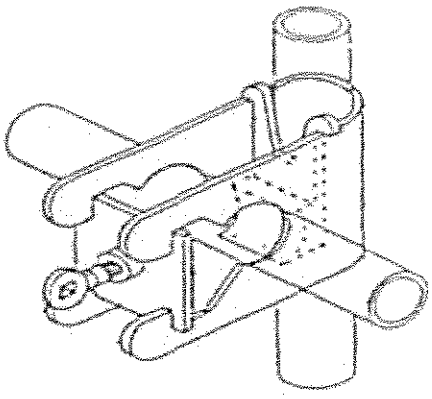

UNIVERSAL COUPLER

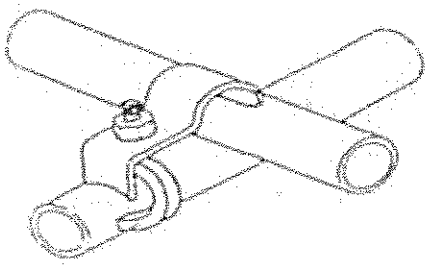

PUTLOG COUPLER

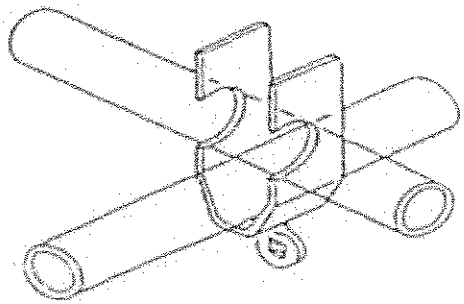

BRACE COUPLER

Attachment-D: THROUGH TIE FOR INDEPENDENT TIED SCAFFLOD

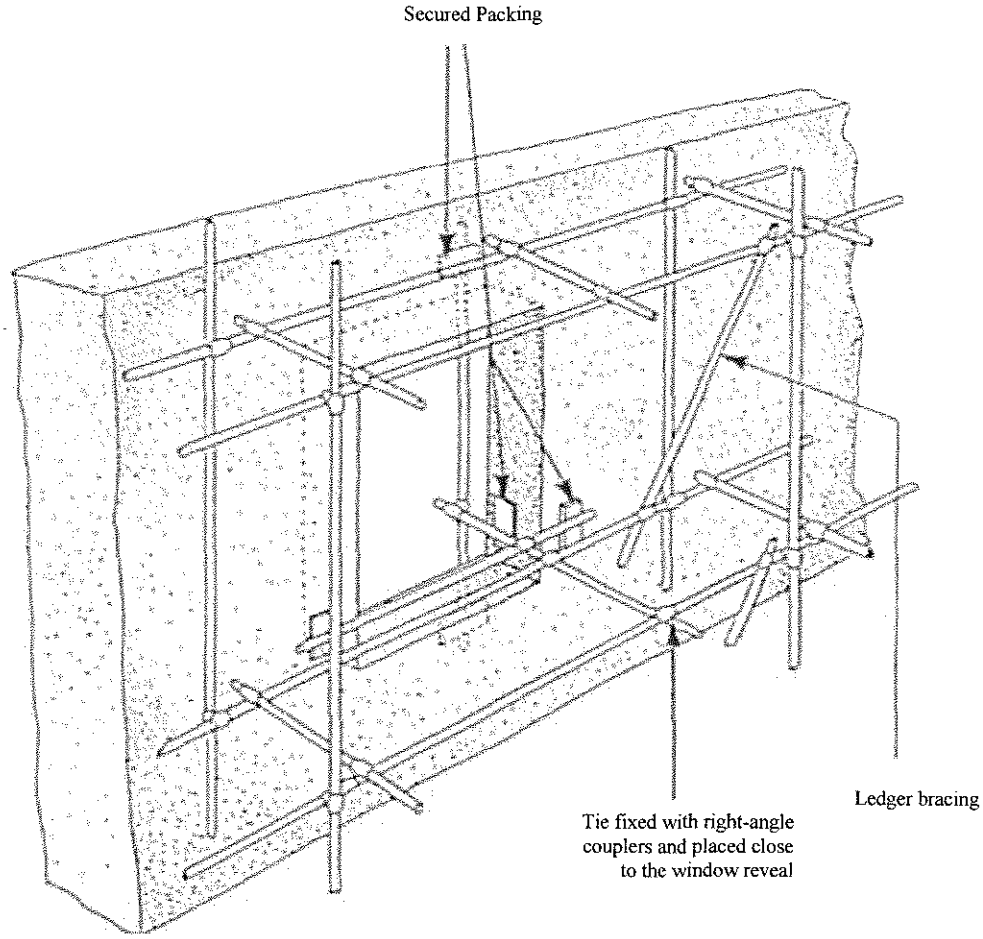

THROUGH TIE FOR INDEPENDENT TIED SCAFFOLD

Attachment-E: INDEPENDENT TIED SCAFFOLD – COLUMEN BOX TIE

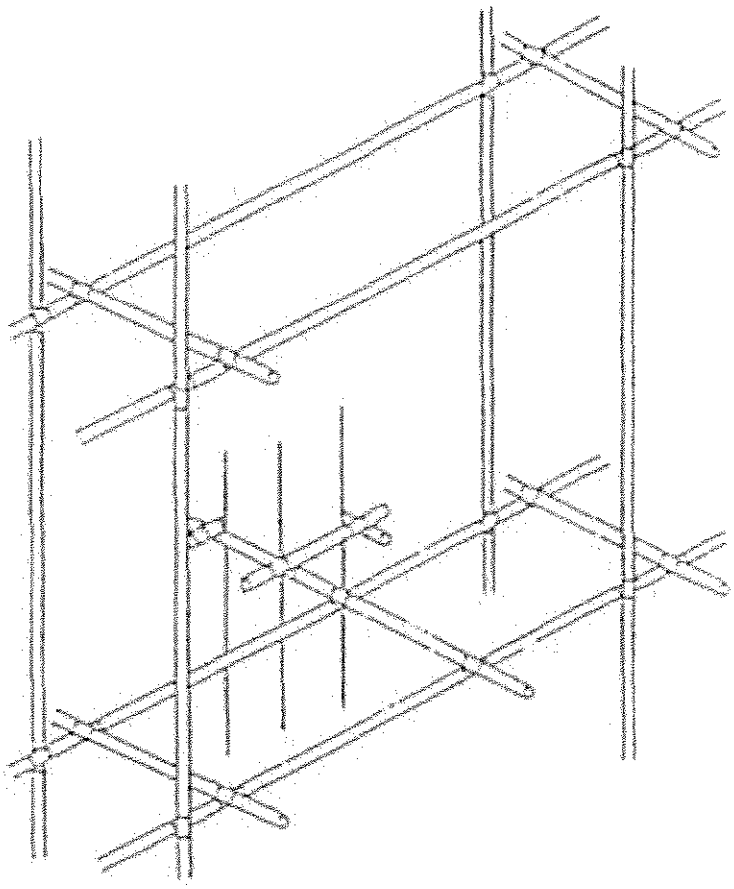

INDEPENDENT TIED SCAFFOLD : COLUMN BOX TIE

Attachment –F: STANDARD SCAFFOLDS –INDEPENDENT & PUTLOG

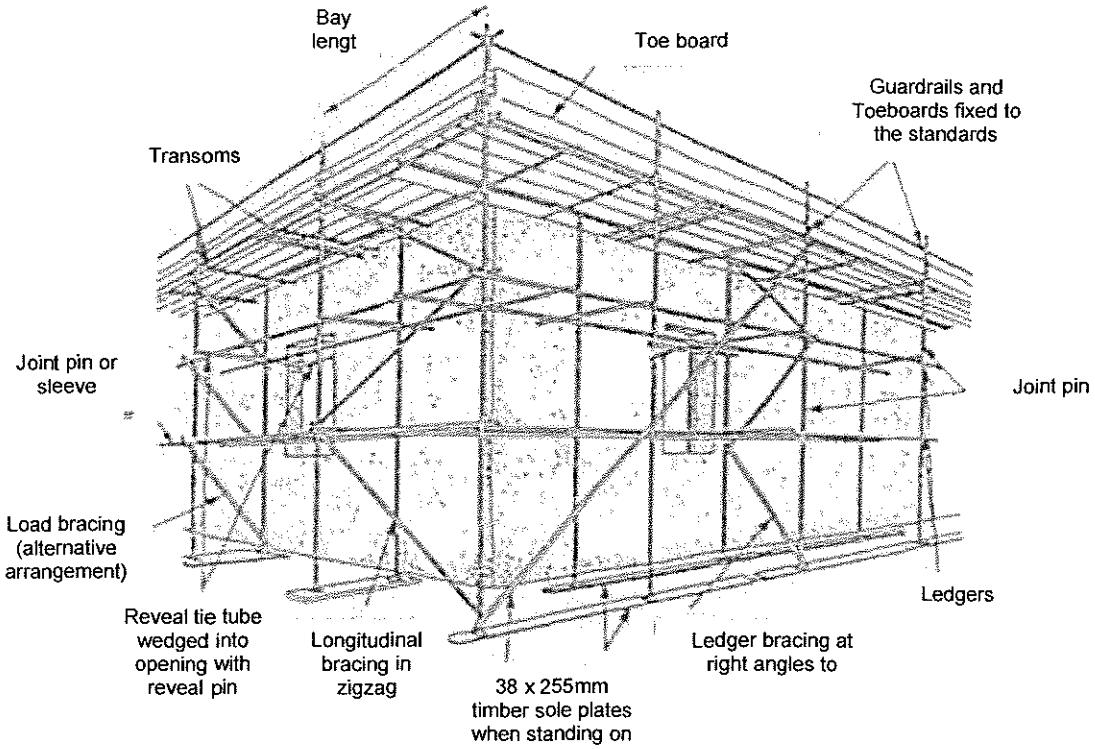

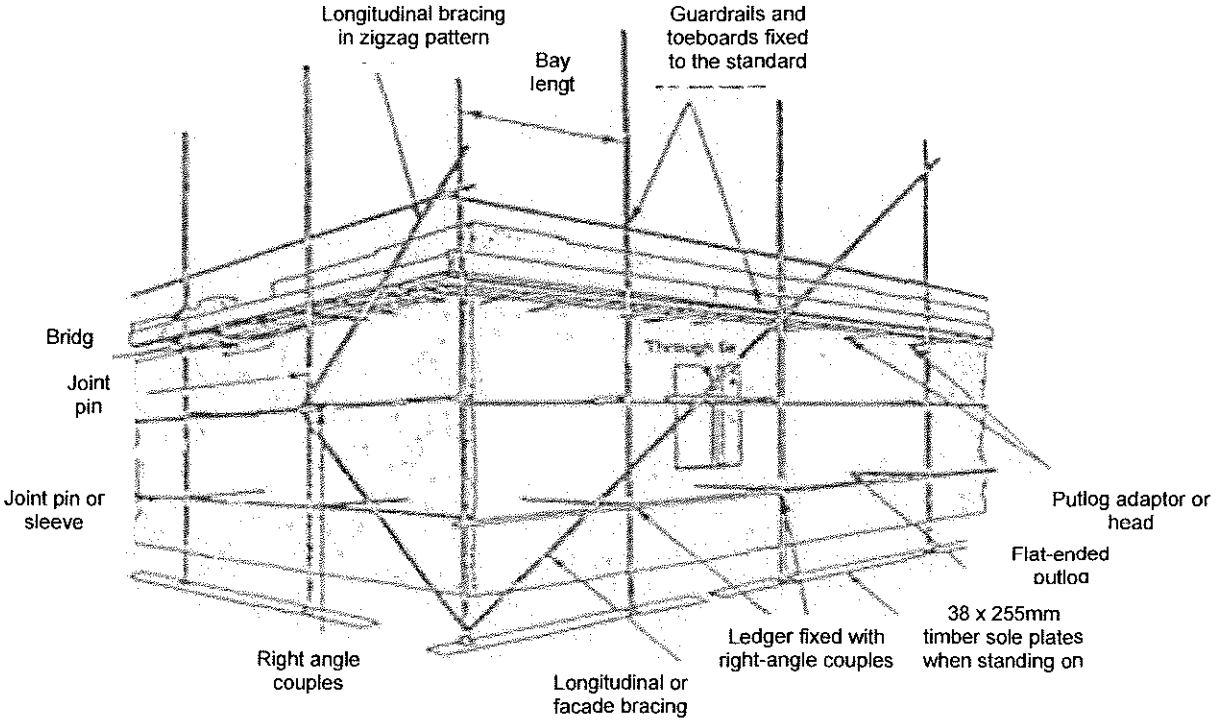

Attachment –G:

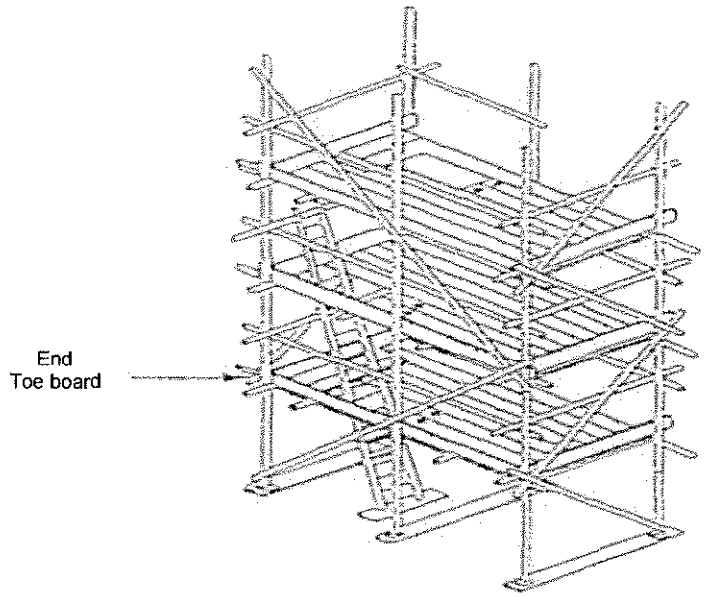

LADDER ACCESS TOWER

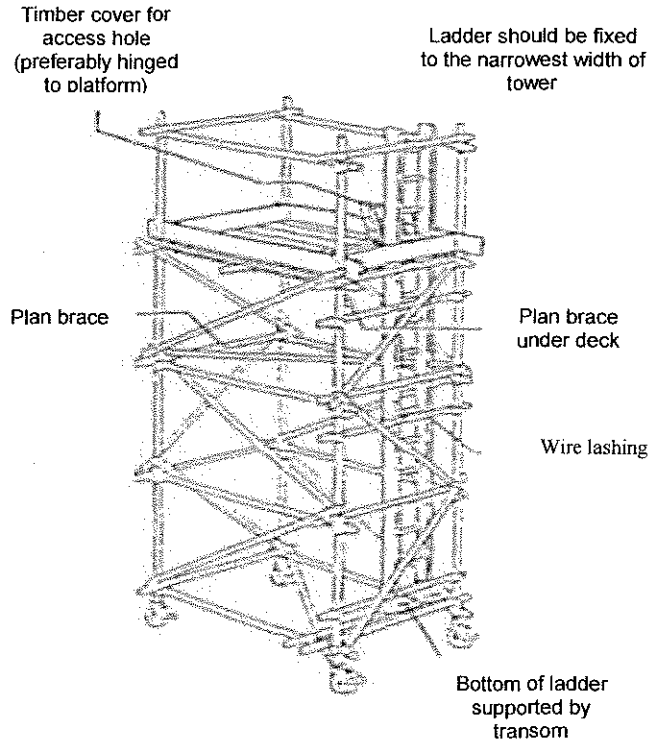

MOBILE TOWER SCAFFOLD

Attachment –H : SCFFOLDING

Scafftag Holder

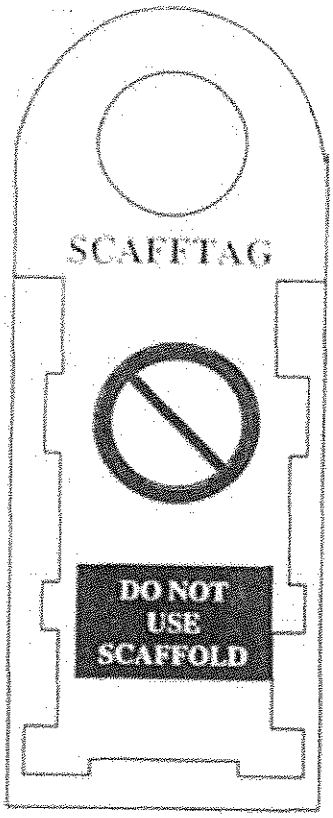

Prohibition Insert

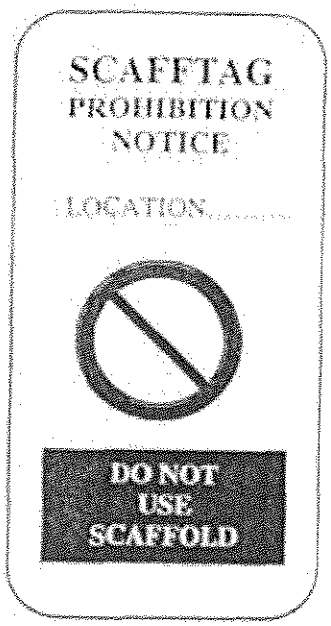

Attachment –I: STATUS INSERTS

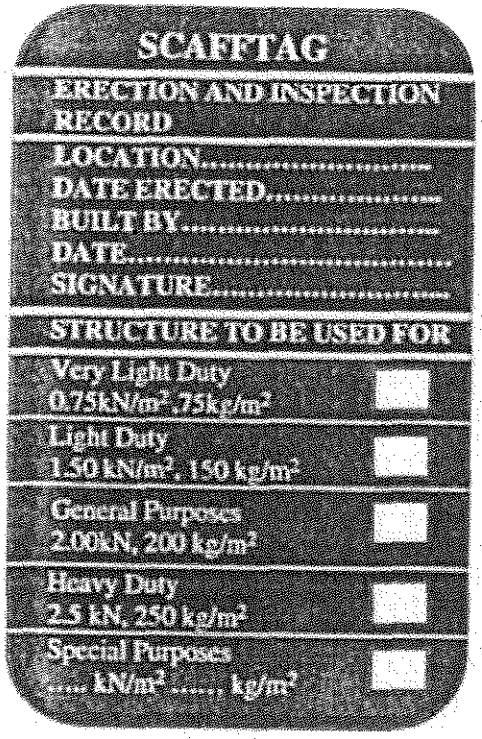

FACE

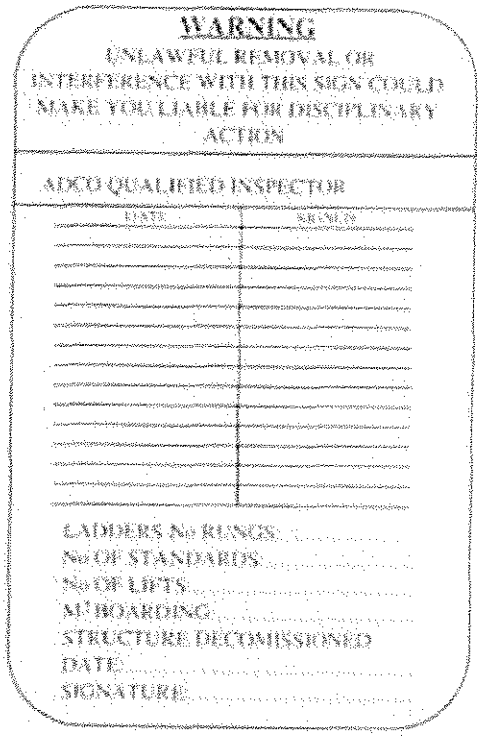

BACK

Attachment –J:

TYPICAL FOLW SCHEME FOR ERECTING SCAFFOLD AND SCAFFTAG PROCEDURE

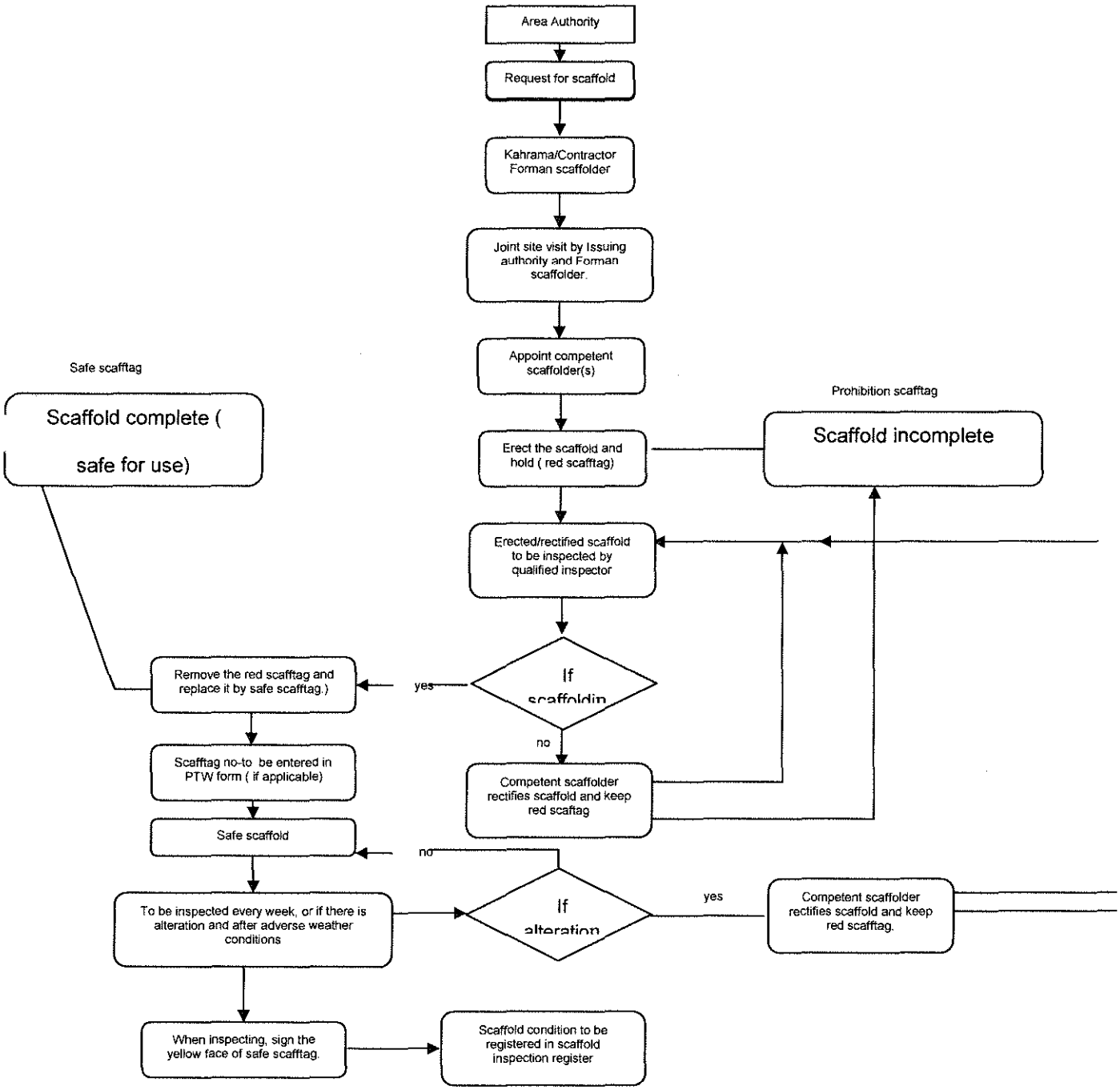

Attachment –I: STATUS INSERTS

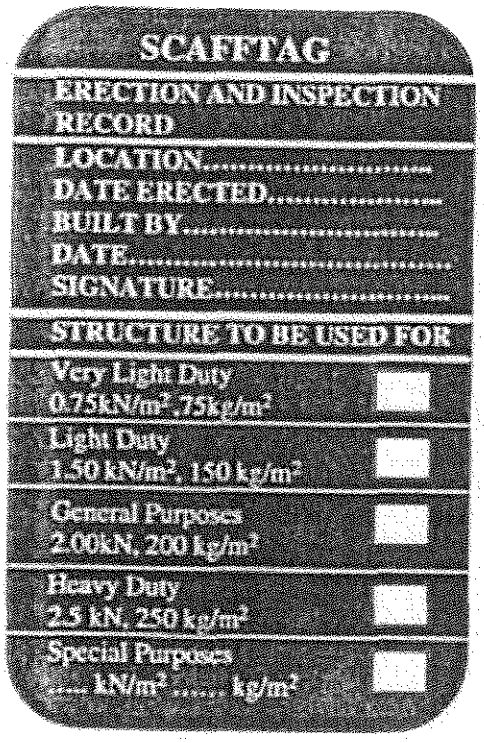

FACE

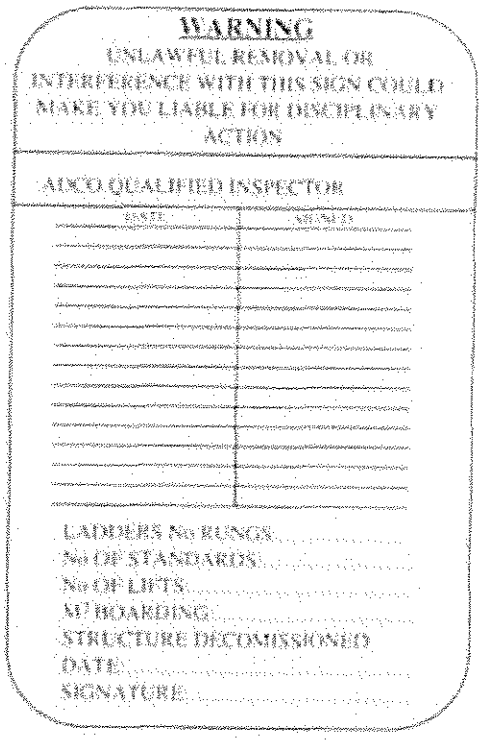

BACK

Records	Retention Time
SCAFFOLD INSPECTIONS HSE-P10/F1	**3 years**

Appendix

HSE-M1-P11

SAFE ERECTION OF STRUCTURES

SAFE ERECTION OF STRUCTURES

Department	Document Type	Document Title
HSE	SAFE ERECTION OF STRUCTURES	SAFE ERECTION OF STRUCTURES

Issue Approval

Prepared By	Approved By
Bahaa Eddin Weld Ali *Sr.Safety Engineer*	Dr. Mohammad Al-Sulaity *Manager, HSE*
Signature:	**Signature:**

Issue Record

Issue No.	Date	Reason for re-issuing Procedure
0.0	14/10/2004	First issue of the Procedure.
1.0		
2.0		
3.0		
4.0		
5.0		

Review Frequency : Yearly.

Table of Contents

Contents	Page
Title Page	1
Document Control & Issue Record Page	2
Table of Contents	3
Purpose	4
Scope	4
Responsibilities & Authorities	4
Abbreviations & Terminologies	5
PLANNING	6
SITE PREPARTION 6.1 ACCESS ON TO THE SITE 6.2 MOVEMENT ON THE SITE 6.3 STORAGE AREAS	6-7
DELIVERY , STACKING AND STORING 7.1 PLANNING 7.2 UNLOADING 7.3 STORING 7.4 STACKING AND DE- STACKING	7-8
LIFTING AND HANDLING	9
MEANS OF ACCESS AND WORKING PLACES 9.1 ACCESS ALONG BEAMS	9-10
EDGE PROTECTION 10.1 LEADING EDGE 10.2 HOLES IN FLOORS	10-11
SAFETY HARNESSES AND NETS	11

1. Purpose

The erection of structures can be both difficult and dangerous. Accidents occur during the erection process or because of instability during erection and whilst handling , lifting and transporting materials. The information contained in this part is designed so as to ensure that those personnel, who are involved in the erection of structures, are provided with a safe system of work.

2. Scope

Safe erection of structures is achieved through:-

- Ensuring erection work is well planned in the form of method statements.
- Ensuring site preparation is such that access is unobstructed, storage area is allocated and personnel are trained in the safe erections of structures.

3) Responsibilities & Authorities

A structural supervisor shall be responsible for safe erection of structures

4-Abbreviations & Terminology

Structural supervisor	A person who has undergone training and has a minimum of five years experience in supervising structural steel erection operations.
Method stateme	A written document detailing a safe system of work for particular task.
Fall arrest device	A mechanical device, when used in conjunction with a safety harness permits greater freedom of movement. In the event of a fall, they restrict the drop, thereby reducing the load imposed upon the body on sudden arrest.
Steel Podgier	A tool used for aligning the holes in steel members to the corresponding holes in the steel members to the corresponding holes in the steel members to which it is to be connected.
Erector	Operative assigned duties in the erection of structural steel who has undergone a safe erection of structures training course.
Girder grip	A device that is attached to the girder for securing the safety harness, achieved by the provision of additional holes at specific points on the steel.
Safety harness	A certified body harness complying with BS1397 or the equivalent, used to limit the distance of a fall and thereby minimize the risk of injury.
Safety net	A certified net complying with BS3913 or the equivalent, used to prevent injury to falling persons. These nets are not to be used as debris nets for the protection of falling tools or materials.
Leading edge	Unprotected edges at height above 2m which are created as work progresses for example, by the construction of floors made from precast concrete units.
Lanyard	A certified nylon rope complying with BS1397 or the equivalent used as an attachment from the safety harness which shall limit the fall to a maximum of 1.2m.

5-PLANNING

The preparation of a written method statement setting out the proposed erection schedule is an important part of planning for a safe system of work. The extent of detail in a method statement shall depend upon the size and /or the complexity of the work.

A structural supervisor who shall be responsible for the planning for safe erection of structures shall be appointed.

The structural supervisor shall provide a detailed written method statement prior to commencing erection on site.

The method statement shall be prepared sufficiently in advance of construction to allow for its safe implementation.

The structural supervisor shall review and update the method statement as necessary so that it remains current. The method statement shall be distributed to all those concerned with the supervision of the erecti

The method statement shall address the following

- Workforce/ supervision
- The effect of the erection sequence on stability, where this is critical, the sequence shall be stipulated.
- Realistic assessment of loadings at all stages of construction.
- The provision of safe access, egress and working places. Including the provision of attachment points for all devices prior to the steel work being put into position.
- Ease of connecting components, e.g. by the provision of landing cleats, which allow a beam to be safely located whilst suspended from crane, and cut out the need to align manually by podgier.
- Equipment, plant, lighting and P.P.E including fall arrest systems.
- Safe handling, lifting, storing, stacking and transportation of components, depending on their size, shape and/or weight.
- Identifiable lifting points and components weights.
- For sub-assemblies, overall weight and lifting points.

6-SITE PREPARTION

6.1 Access on to the Site

A site check shall be made for hazards and special features, ensuring that:

- suitable unobstructed safe access with good all round visibility is provided for delivery vehicles, cranes and other plant.
- Any delivery requirements which may pose access problems, because of the curvature and gradients of roadways, are taken into account.
- The structural stability of adjacent buildings will not be affected.
- There will be no risk of contact with overhead services.
- Underground services will not suffer damage.

6.2 movement on the site

in planning and preparing for movement about the site at ground level the following shall be taken into account:

- The need to provide good pedestrian access, e.g. by providing clear and clean access ways, there by avoiding tripping hazards and slippery footways.
- The need to exclude personnel from areas where they would be at risk due to work in progress over head.
- The likely movement patterns and working locations of lorries and plant, particularly heavy equipment such as cranes, where stability is vital.
- The projected use of access equipment, which could include power-operated mobile work platforms, tower scaffolds and ladders.
- The need to ensure that access routes are not impeded by other site activities such as the excavation of trenches.

6.3 storage Areas

Areas shall be allocated for the stacking and storing of components, these areas shall be clearly shown on site plans. These areas shall be:

- Clear of obstructions, reasonably level, and of adequate size.
- On ground which is capable of withstanding the loads imposed by the stored materials and plant used in the area.
- Sited away from hazards such as overhead power lines.
- Arranged so that clear access and sight lines are provided and maintained between stacks of components.
- Provided with artificial lighting and weather protection where appropriate, to aid handling.

7-DELIVERY , STACKING AND STORING

7.1 Planning

The delivery of materials to site shall be planned:

- So that arrival times coincide with site requirements.
- To coincide with the availability of sufficient numbers of personnel and suitable cranes to ensure safe unloading.
- To allow components to be erected directly from the delivery lorry, where appropriate, and particularly if site storage is limited,

7.2 Unloading

When unloading delivery vehicles it shall be ensured that:-

- They are stable at all times.
- Components have not been damaged during transportation to the site.
- All components, loose fittings, erection packs and fasteners shown on the loading lists are present.
- Adequate lighting is available, especially for deliveries which may be made when there is insufficient light.
- Lifting or slinging points are present and correctly marked, particularly for unusually shaped components, heavy components or sub-assemblies, special lifting attachments or brackets may be required.

- The weights are clearly marked on all members, bundles of components and sub-assemblies of one tone or over.
- Unwanted rotational movement of long components or sub-assemblies is prevented by using guidelines fixed near the ends of the load.

At the time of unloading , any damaged or incorrectly manufactured components or omissions from the loading lists shall be recorded to avoid any adverse effects on safe erection.

7.3 Storing

To enable components to be readily accessible for erection in accordance with the erection scheme in the method statement, the following shall be considered:-

- Whether they are required for immediate use or have to be stored for future use.
- A method of storage to be adopted which allows for retrieval in the order required.
- The provision of clearly designated storage areas from which components required for stability purposes, e.g. bracing, can be retrieved readily.
- The provision of a separate area for the storage of components which can be handled manually.

Arrangements shall be made for the possible need to retrieve components for activities prior to erection such as:-

- Connecting together at ground level to form sub-assemblies.
- Planned on –site preparation such as surface treatment or adding connections.
- Remedial work following damage or on-site modifications.
- Quality control inspection.

7.4 stacking and de-stacking

Any stack of materials, whatever its size , shall be made in such a way that it can be de-stacked safely,

Matters that shall be taken into account when stacking or de-stacking components shall include:-

- Stacking in a way which will ensure that there is no risk of collapse sliding or distortion.
- Enhancing stability of the stack by ensuring the supply and use of adequate numbers of timber packing pieces, battens and wedges, which shall be of suitable size and strength and positioned in lines vertically throughout the stack.
- The safety of personnel on the stack by ensuring that if access at height is required (e.g. to fix or remove lifting slings), operatives are provided with a safe means of access and safe place of work.
- Avoiding injury due to trapping when handling

To aid erection, all components shall be stacked on suitable timber battens and packing pieces so that:-

- They are not brought into contact with the ground, thereby preventing deposits which could present slipping hazards.
- Slings can be positioned easily around components for later handling.

8- LIFTING AND HANDLING

Safety during lifting and handling requires careful consideration of all aspects for the methods and systems to be used.
When relating to the use of cranes the following shall be undertaken:-

- Organize the appropriate number and type of cranes, bearing in mind that the choice could be limited if cranes are to be hired locally.
- Confirm that the designated sitting positions for cranes can be achieved, with suitable hard standing provided.
- Check for the presence of hazards or development which may have altered the site since the original plans were made.
- Appoint a crane co-ordinator to co-ordinate the complete lifting operation and requirements of part no **13**of this manual-lifting operation, which shall be trained in the principles of " manual handling"

9- MEANS OF ACCESS AND WORKING PLACES

In choosing a particular method of access or working place to give protection against falls, the following shall be considered:-

- Ground conditions, a greater variety of access aids can be used if suitable hard standing or floor slabs are provided.
- Any permanent access routes, such as stairways, that can be erected as construction progresses.
- Height and accessibility of connections.
- The number of times access is required, including any supervision and inspection
- The Type of activity, tools to be used , and how long it will take.
- Maneuverability required around connections by erectors, materials and equipment, and their proximity to other site activities.
- The availability of, and the clearances required for, any plant or equipment to be used.
- The need to move access ways as the job progresses to form the shortest possible safe route.
- Any abnormal site conditions (e.g. unloading restrictions, limited hours of working, likely prevailing wind conditions etc.)

Depending on the method chosen it may be necessary to prepare structural components in advance of erection, possibly during manufacturer. For example extra holes in components may be needed for use with a girder grip attachment for safety harnesses or fall arrest devices.

The surface of working platforms, gangways and runs shall be large enough and strong enough to carry the required loading of men, tools and materials.

Wording platforms and means of access may be part of the permanent structure or may include scaffolds, lightweight staging, purpose built platforms, mechanical access devices, or some other temporary platform, gangways or runs. Ladders may be used in certain circumstances.

The working platform or means of access shall comply with part **12**of this manual-access, egress and working at height.
Where it is impracticable to provide any of the above systems, securely fixed safety harnesses shall be used, o safety nets erected.

9.1 Access along beams

"Walking the top surface" of beams or girders shall not be permitted unless these is an effective continuous running line or anchorage to which a safety harness can be attached to prevent people falling.

Where the flange or surfaces of beams or girders are being used repeatedly d a means of access, edge protection which includes guard-rails and toe- boards shall be provided on either side to prevent persons falling more than 2m.

"Beam straddling" where access if of short duration and the size of beam allows on erector to conveniently sit astride the top flange with hand and foot hold, then this form of access will be permitted provided:

- An " I " beam is used
- The erector's sole and heel of each foot can rest on the bottom flange and both hands can be used to grip either side of the top flange.
- Secure foothold is available for both feet and can be used in conjunction with the handhold position without losing co-ordination.
- The top flange or surface does not reach higher than the erector's waist.

10-EDGE PROTECTION

Edge protection that is provided shall be capable of preventing people from falling. When assessing the type of edge protection to use, the following shall be taken into account:

- When and where it is to be constructed and removed , particularly with respect to height and any clearance necessary.
- Whether it will be removed frequently.
- The particular application and the space available, e.g. whether it is for the edge of a large area or for an independent walkway.
- How easily operatives and equipment can reach the point of construction.

When edge protection is to be fixed to structural components every effort shall be made at the planning stage to ensure that as much as possible is fitted at ground level before erection.

Subsequent erection shall be taken into account so that edge protection does not restrict these activities. If walkways and edge protection are not joined together, arrangements shall be made to ensure that the two do not separate.

Where scaffolding tubes and fittings are, only structural load bearing components shall be used. The edge protection shall be checked before use and on adaily basis. Freestanding edge protection shall not be able to slide or overturn. Counterweights if required for stability shall be clearly marked and information regarding the spacing of the frames and the necessary counter-weights shall be kept on site.

Clamped edge protection shall be rigid and securely fixed , and the part of he structure to which is clamped shall be capable of resisting and likely imposed loads.

10.1 leading edge

The leading edge shall be protected with a barrier every time work. Ceases or is left unattended. The barrier may be proprietary, purpose built, or constructed from scaffolding, shall provide rigid restraint, and may be;

In dependent static barriers which do not overturn and which incorporate rigid guard-rails.
Free standing, with crossed scaffold tubes supporting tubing forming a scaffold barrier, this type of barrier is not counterweighted, and may not be stable enough to resist overturning if anyone fell against it. It is not suitable as a guard-rail immediately adjacent to an open edge, but could be set at least 2m back to limit the extent of the working edge to prevent anyone approaching the edge.
Fixed to columns in advance to provide protection at the side of the advancing edge. Fiber rope shall not be used, but tensioned steel wire rope is acceptable.

10.2 Holes in Floors

Where any hole is left in a floor through which a person may fall more than 2m , guard-rails and toe-boards shall be installed or, alternatively, install covers which are strong enough for the purpose and secured and marked "Danger Hole Below"

11- SAFETY HARNESSES AND NETS

all personnel who are involved in the erection of the structure shall wear a full body harness at all times where there is the possibility of falling more than 2m.
training shall be provided to erection personnel in the use and maintenance of safety harnesses and fall arrest systems. Maintenance should be carried out by a qualified person.
The lanyard of the harness shall be attached to the structure or other fixing points as high as possible above the working position to limit the height of any fall. Methods of attachment shall include:

- Looping the lanyard around a structural member, and fastening the hook back onto the lanyard. The use of such a choke hitch's is dependent on the overall size of the frame member encompassed by the loop of the lanyard or on the thickness of the extremities of the member which may be small enough to cut the lanyard if a fall occurs.
- Where frame members are too big to allow lanyards to be choked around, a wire rope (minimum diameter 16mm) can be secured around the member (preferably at ground level prior to erection) and the lanyard then attached to the wire rope itself.
- Using a proprietary girder grip device, these can be inserted into a suitably sized hole in the structural frame work and locked to give a secure anchorage. This use is dependent on there being a spare correctly sized hole and it must therefore be included at the detailing stage.
- The use of safety net may be used in addition to safety harnesses, the erection and dismantling sequence of the safety net shall be taken into account.
- Nets shall be fitted as close to the working surface as possible, and shall not be lower than 6m below the work. The initial sag of the net shall be 1/4 to 1/5 of the span of the net and a clearance of 2m below the initial say is required in case of a fall

Records	Retention Time

Appendix

HSE-M1-P12

ACESS, EGRESS& WORKING AT HEIGHT

ACESS, EGRESS& WORKING AT HEIGHT

Department	Document Type	Document Title
HSE	ACESS, EGRESS& WORKING AT HEIGHT	ACESS, EGRESS& WORKING AT HEIGHT

Issue Approval	
Prepared By	**Approved By**
Bahaa Eddin Weld Ali *Sr.Safety Engineer*	Dr. Mohammad Al-Sulaity *Manager, HSE*
Signature:	**Signature:**

Issue Record

Issue No.	Date	Reason for re-issuing Procedure
0.0	14/10/2004	First issue of the Procedure.
1.0		
2.0		
3.0		
4.0		
5.0		

Review Frequency : Yearly.

Table of Contents

Contents	Page
Title Page	1
Document Control & Issue Record Page	2
Table of Contents	3
Purpose	4
Scope	4
Responsibilities & Authorities	4
Abbreviations & Terminologies	5
ACCEESS/EGRESS 5.1) Gangways, Including Runs and Ramps 5.2) Minimum Width of Gangways 5.3) Batters (an artificial, uniform steep slope) 5.4) Stairs 5.5) Portable Ladders	6-7
OPENINGS, CORNERS, BREAKS, FLOOR EDGES & OPEN JOISTS	8
ROOF WORK	8-9
WIRE ROPE EDGE PROTECTION	9
SAFETY HARNESSES	9-10
TRESTLES 10.1) Design, Loading and Dimensions 10.2) painter's folding trestles 10.3) Steel Extending Trestles	10
MOBILE ELEVATING WORK PLATFORMS (MEWP	10

1. Purpose

The purpose of this procedure is to ensure that a safe means of access/egress is provided and maintained at all times. Where work is required to be performed at height which cannot be reached from the ground, means must be provided to safely raise the workers to a working level from which the job can be completed safely.

2. Scope

The minimum criteria for design of Access / Egress facilities so as to allow prompt escape of occupants form buildings or work, where desirable, into safe areas within buildings.

3. Responsibilities & Authorities

It is management's responsibility to ensure that all employees are provided with safe access/ egress to their place of work at all times and when working at height protection methods are in place to ensure work can be performed with minimal risk to the employee concerned.

4- Abbreviations & Terminologies

ACCESS/ EGRESS	A safe means of entering and exiting a place of work.
WORKING AT HEIGHT	Where persons may fall a distance of tow meters or more.
MEWP	Mobile elevating work platforms

5-ACCESS/ EGRESS

Access/egress to all working places shall be clear, free of obstruction and the use of any such access/egress shall not give rise to additional hazards, e.g falling debris on demolition sites, vehicular hazards on earth moving sites. Access/ egress routes shall be clearly defined and/ or marked out.

5.1) Gangways, Including Runs and Ramps

These way be necessary to afford access/egress between working places at different levels in an elevated position or across excavations, etc.
The following shall be followed:-

- Material used in the construction of any gangway shall be in good condition.
- The access/egress shall be constructed so that it is well able to support the loads being imposed upon it.

5.2) Minimum Width of Gangways

- 430 mm if used for the passage of persons only.
- 600 mm if used for the passage of material.

Any slope on a gangway shall not be greater than 1 vertical in 1.5 horizontal.
Where the slope of a gangway is such that persons way be likely to slip, and in any case where the gangway slope exceeds 1 vertical to 4 horizontal, stepping laths shall be used to provide a firm foothold. The laths shall extend over the full width of the gangway, with a gap of not mot more than 100mm, to allow free movement of wheelbarrows.
Gangways shall not be allowed to become slippery.
Guard – rails and toe- boards shall be provided where persons can fall more than 2 m.

5.3) Batters (an artificial, uniform steep slope)

Consideration shall be given to the provision, of suitable access across batters. Such an access extensively used by persons carrying material, and without suitable provided, is likely to become slippery.
A scaffold handhold at a height of between 910 mm and 1.15m shall be provided at the site of the access.
Steps shall be cut into the batter, but on shallow betters, where material providing a firm foothold (e.g, blinding) is used, steps shall not be necessary .

5.4) Stairs

where person can fall more than 2m from the step edges of the stairway , a double guard-rail , i.e one fixed at a height of between 910 mm and 1.15m and another fixed halfway between the upper guard – rail and the stairs, shall be provided.
Where persons cannot fall more than 2m , one edge of the stairway shall be provided with a scaffold handhold at a height of between 910 mm and 1.15m.

5.5) Portable Ladders

Ladders shall be inspected on daily bases before use , and those with missing or damaged rungs or damaged strings shall not be used . To permit the inspection , ladders shall not be painted. Where it is possible to cut off the damaged part of the Ladder, the shortened good part may be used. Home made Ladders shall not be used. Ladders shall be erected at a working angle of approximately 75° to the horizontal, i.e one unit out of the base for every four units of height.

Ladder shall rest on a firm level base. If it is intended to rest the Ladder on an uneven bade or stairways etc, then a leveling device shall be used, Lose packing shall not be used ,

Where possible , all ladders shall be secured near the top , (to prevent the base slipping sideways or twisting) by lashing or clamping each stile to a convenient secure anchorage. If it is not possible to secure by this method ladders shall be restrained by the following means;-

- Spreader arms attached to top of ladder.
- Securely anchored near its base.
- Person "Footing" base of ladder whilst in use. An intermediate tie rope be necessary to prevent swaying on long ladders.

Ladders shall extend at least 1m above the stepping off point.

Ladders shall be placed so that there is a clear space behind each rung to permit the secure placing of a persons feet.

A resting plat form shall be provided at vertical of 9m, where persons can fall more than 2m from these platforms, then guard – rails and toe – boards shall be provided.

If a ladder protrudes through a working platform, then the opening shall be as small as possible , and in any case 500 mm maximum width.

Suitable access to a working place shall be provided at the stepping off point , Persons shall not be requires to climb over or through guard- rails and toe – boards. Be kept as small as possible.

Single board runs to lasers shall not be used.

Ladders that are used to gain access to scaffold platforms, working places to scaffold platforms, working places , etc. shall be single pole ladders . Extension ladders or aluminum ladders shall not be used.

Aluminum , wooden and extension ladders may be used where the ladder is used as a working place. Aluminum ladders, however, must never be used where electrical hazard exist.

Consideration should also be as the type of ladder when handling hazardous chemicals.

When using an extension ladder, the overlap of rungs of any tow adjacent sections shall be as follows:-

Length of ladder :-

- Less than 5m 1½ rungs
- Between 5m & 6m 2½ rungs
- Over 6m 31/2 rungs

Only one person shall be permitted on a ladder at any one time, another person shall always foot a ladder when anyone is climbing a ladder which is not secured at its top.
Ladder shall not be used to support working platform other than that, which is supplied with the ladder limpet system.

Important Note

A ladder shall only be used as a workplace after careful consideration that it is suitable for the purpose.
Tools and materials shall not be carried by persons ascending or descending ladders except that tools may be carried in purpose designed pockets or special belts (waist belt), provided they do not impair movement.
A person working on or from a ladder shall always have both feet on the rungs and a secure handhold. If the work to be done necessitates the use of both hands, safety harness clipped to a secure anchorage shall be used.

6-OPENINGS, CORNERS, BREAKS, FLOOR ED GES & OPEN JOISTS

Where any person can fall a distance of more than 2 m, guard- rails and toe- boards shall be fitted at the open edge.
The height of the guard – rail shall be between 910mm and 1.15m with the toe-board being a minimum of 150mm high. The gap between the top of the toe – board and the guard- rail shall not exceed 765 mm.
An intermediate guard- rail shall be fitted mid way between the guard – rail and the top of the toe – board on all platforms, except those used merely for the passage of persons.
Opening through which persons can fall more than 2m shall be guarded as above or covered over. The covers shall be of adequate strength, secured in position and bear a notice indicating the purpose of the cover i.e. "' Danger Hole below'" .
Where work is being carried out from open joisting where persons can fall more the 2m, the joists shall be boarded over , and guard- rails and toe-boards shall be fitted.

7-ROOF WORK

Flat roofs (i.e. 10° or less pitch) from which persons can fall more than 2m. shall be provided with guard – rails to a height of between 910 mm and 1.15m and toe- boards minimum of 150 mm.
The gap between the top of the toe- board and the guard- rail shall not exceed 765mm.
Sloping roofs (i.e. more than 10° pitch) from which persons can fall more than 2 m shall be guarded in similar fashion or an external scaffold provided.
However, where work from a flat or sloping roof in not extensive (i.e. total duration of the activity less than one hour) and is of light nature. It may be possible for persons to work from crawling ladders with a safety harness attached.
On sloping roofs that are likely to become slippery, and in all cases when the pitch exceeds 30° crawling ladders shall be provided, secured , and used.

Where work on roofs containing fragile material is undertaken:-

- warning notices shall be displayed i.e. (Danger Fragile Roof)
- suitable and sufficient number of ladders and crawling boards spanning the purlins, shall be provided and used.
- Scaffold boards shall not be used as platforms on such material.

Walking on purlins, sheeting bolts etc. Shall not be permitted.

8-WIRE ROPE EDGE PROTECTION

During erection of structural frames, as an alternative to tube and fitting edge protection, a wire rope system may be used , taking into account the following points:-

- The edge protection system is designed for the particular contract, correctly installed and tested by a competent person, and maintained.
- Only tested wire rope 10 mm diameter shall be used.
- Wire rope shall be attached at two points to columns of stanchions, at approximately 450 mm and 900 mm height.
- Connection to the structure shall be by means of bolted eyes in stanchions, eyes on plates bolted to concrete columns, eyes and rings welded to steelwork, or temporary re- usable fittings. The fixing shall be strong enough to resist the end force in the wires.
- The degree of tautness in the wire shall be such that, under an impact force (assumed to be 1.25kn), deflection of the wire shall not allow a person to fall between the wire and open edge, (normally limited to 100 mm)
- Wire ropes shall be checked daily and re-tensioned by a competent person using screw jacks, bottle screws etc. as required. Such checks and work conducted shall be recorded in the daily long and signed.

9-SAFETY HARNESSES

When a working platform cannot be provided, fitted with guard- rails and toe – boards as per section 5 , full body safety harnesses shall be used where persons can fall more than 2m.
All harnesses shall be in good condition and inspected prior to use, and comply with BS1397 or the equivalent.
Fixing points shall be establish such that, persons have free movement without the need to constantly un dip the harness. A running line is recommended where free movement is required.
When the foregoing distance do not permit sufficient range of movement, then approved and certified inertia reels may be used , provided that the maximum free fall distances are not exceeded.
Employees shall be provided with full body harnesses used in conjunction with safety lanyards, for attachment to anchorage points. Harnesses may be built into lightweight carrier suits.

Freedom of movement must be provided, but when the combined effects of the position of the anchorage, the length of the lanyard of any webbing limits the drop to a maximum of 2m.

10-TRESTLES

10.1) Design, Loading and Dimensions

A trestle scaffold shall only be erected on affirm level surface with each stile or foot properly footed.
A trestle scaffold shall not be used where person would be liable to fall more than 4.5m from the working platform.
The maximum loading on a trestle scaffold shall not exceed 72kn/m2.
Folding trestles shall only be used for a one- tier platform. Fixed trestles used for more than one tier shall be braced to give firm support.

10.2) painter's folding trestles

Hinges shall be checked to ensure they are not broken, rusty or loose, prior to use.
Hinges shall be of the self-locking type to limit, the angle to which the trestles can be opened.
Timber trestles shall be checked to ensure they are not cracked or split, that cross bearers are through tenoned and double wedged, and that check and tie rods are fitted, prior to use.
Timber trestles shall not be painted.

10.3) Steel Extending Trestles

Trestles shall be checked to ensure that they are not twisted or damaged and that all four feet rest evenly on the ground prior to use.
Adjustable crossbars shall be supported by purpose – made steel fixing pins, which shall be chained to the trestle to prevent loss.

11- MOBILE ELEVATING WORK PLATFORMS (MEWP)

Mobile elevating work platforms (MEWP) e.g. scissor lifts, hydraulic platforms, cherry pickers etc. shall only be operated by persons who have been trained in there usage by the manufactures/ suppliers representative.
Where MEWP'S are fitted with outriggers or stabilizers, these shall be used in accordance with the manufacturers' instructions.
The safe working load shall be prominently displayed other MEWP.
All dangerous parts of the equipment at ground level, shall be securely fenced / guarded.
The work platform on MEWP'S shall be fitted with guardrails and toe boards.
MEWP'S shall not be used for travel with the platform raised unless specifically designed to do so.
MEWP'S shall not be used as lifting appliances.

Records	Retention Time

Appendix

HSE-M1-P13

Lifting Operations

Lifting Operations

Department	Document Type	Document Title
HSE	Lifting Operations	Lifting Operations

Issue Approval	
Prepared By	**Approved By**
Bahaa Eddin Weld Ali *Sr.Safety Engineer*	Dr. Mohammad Al-Sulaity *Manager, HSE*
Signature:	**Signature:**

Issue Record

Issue No.	Date	Reason for re-issuing Procedure
0.0	14/10/2004	First issue of the Procedure.
1.0		
2.0		
3.0		
4.0		
5.0		

Review Frequency : Yearly.

Table of Contents

Contents	Page
Title Page	1
Document Control & Issue Record Page	2
Table of Contents	3
Purpose	4
Scope	4
Responsibilities & Authorities	4
Abbreviations & Terminology	5
Planning	6-7-8
Inspections, Tests and Examinations	8
Records of inspections , test and examinations	8
Setting up cranes	9
Operation of cranes	9-10
Automatic safe load indicators	11
Use of lifting gear	11-12
Signaling	12-13
Hoists	13-14

Form

1- Lifting Appliances

2-Automatic Safe Load Indicators

3- Hoists Used For Carrying Persons

ATTACHMENT

D: Crane Signals

1) Purpose

The purpose of this part is to ensure that all employees who participate in lifting operations are fully a ware of their responsibilities and act in a manner that will ensure safe lifting operations.

2) Scope

Safe systems of work are an integral part of any lifting operation , whether it is a simple, repetitive or complex operation that is required to take place. To ensure safe lifting operations this is achieved through :-

- Ensuring lifting operations, hoists and lifting gear are certified and fit for purpose .
- Ensuring lifting operations are planned and control so that a safe system is provided and maintained .

3) Responsibilities & Authorities

Through the implementation of the rules contained in this part, Line Management responsibility is to provide a safe system of work .

4) Abbreviations & Terminologies

LIFTING APPLIANCE	A crab, winch, pulley block or gin wheel used for raising or lowering and a hoist, crane, sheer legs, excavator, drag line, piling frame, aerial cableway, aerial ropeway or overhead runway .
LIFTING GEAR	A chain sling, rope sling or similar gear, and a ring , link, hook, plate – clamp, shackle, swivel or eyebolt.
HOIST	A lifting machine, whether worked by mechanical power or not, with a carriage , platform or cage, the movement of which is restricted by a guide or guides, but dose not include a lifting appliance used for the movement of treks or wagons on a line or rails .
SAFE WORKING LOAD (SWL)	The relevant safe working load required to be specified in records in records of test and examinations and to be marked on the lifting appliance, lifting gear, etc.
Multiple lift	lifting operations, involving the use of more that one crane .
CRANE COORDINATOR	A person who is appointed to be responsible for the organization and control of lifting operations.
LIFTING SUPERVISOR	A person who has undergone training and demonstrated sufficient partial experience in supervising lifting operations.
BANKS MAN / SLINGER / SIQNALLER	A person who has undergone training in banking, slinging and signaling of lifting operations .
THIRD – PARTY INSPECTION AUTHORITY	A Qatar registered crane and lifting equipment inspection agency, approved by Kahramaa .

5) Planning

5.1) CONTROL

A crane & Co–ordinator shall be appointed who shall be responsible for the organization and control of lifting operations. The crane co–ordinator shall carry out the following duties:

- Make an assessment of each lifting operation .
- Plane each operation and select the most suitable lifting appliance, gear and equipment .
- Consult, co-ordinate and gain approval form the relevant departments prior to lifting operations taking place .
- Ensure that inspection and maintenance procedures are in effect for the selected plant and equipment and up to date test and thorough examination certificates are available at the work location .
- Ensure that procedures exist for incident and defect reporting .

5.2) WRITTEN PLANS

The crane co–ordinator shall provide written plan for lifting operations which shall include details of the equipment to be used , together with safe working loads , the general precautions to be taken, availability of telephones, first aid equipment etc.

5.3) WEIGHT OF LOAD

The crane co–ordinator shall determine the weight and centre of gravity of the load to be lifted . In the absence of this information from the supplier, the weight of the load shall be determined either by weight binge, load cell or accurate calculation .
The weight of the block and of any lifting gear to be used shall be included in the total weight to be lifted.

5.4) SIMPLE OPERATIONS

Simple operation do not require elaborate planning . A note of the weight to be lifted and the maximum radius that must be used from the centre of rotation of the crane shall be sufficient .
Information on the height to or from which the load is to be handled and an explanation of the slinging arrangements shall also be included in the planning of simple operations .

5.5) REPETITIVE OPERATIONS

Straight forward repetitive operations will require to be planned one only . The lifting supervisor shall monitor the operations to ensure no changes occur that requires a revision of the method of work .

5.6) COMPLEX OPERATIONS

More complex operations will require more detailed planning and preparation .
The plan and method statement shall be accompanied by drawings, sketches or photographs in order to make completely clear to the personnel concerned how

the operation is to be handled and correct sequence in which the work is to progress .

5.7) TANDOUR / MULTIPLE OPERATIONS

Multiple or tandem lifting operations, involving the use of more than one crane , require the most detailed and careful planning .
Every crane involved in multiple and tandem lifting shall be de-rated by 25%.
Due to the complexity and stress involved in tandem multiple lifting, this practice is not recommended.

5.8) ACCESS

Access for both the lifting equipment and the load to be lifted is considered at the planning stag . the following matters shall be included:

- The suitability of public roads for the movement of large cranes and large loads .
- The widths of entrances to allow the passage of large loads without interrupting the movement of other traffic .
- Sufficient space shall be available in which to erect mobile cranes for the work and space to accommodate the maximum length of jib to be erected , together with sufficient space for movement of the auxiliary crane .
- Arrangements for closing the area during the erection of the carne , the lifting operation and the subsequent dismantling of the crane, so as to completely exclude all personnel, other than those immediately connected with the operations .

5.9) GROUND CONDITIONS

The crane co–ordinator shall ensure that the ground conditions both in relation to access and the load, which will be imposed during the erection and operation of the crane, are capable of with standing the pressure .

5.10) OVER HEAD POWER LINES OTHER OBSTUCTIONS

At all stages during the progress of a lifting operation, from planning through to completion, the crane co–ordinator shall
ensure that precautions are in place to a void overhead power lines and other overhead obstructions . The overhead protection shall be placed at least 1.5 jib lengths on lengths side of the power line .
Arrangements to ensure clearance from obstructions shall include due allowance for the tendency of crane jibs to" bob up and down " both during the lifting operation and when traveling .
As a general rule, a minimum clearance from overhead power lines of 6 meters is required to be maintained at all times .
When it is necessary for lifting appliances to pass under power lines , warning notices shall be placed on either side of the road or track and an overhead barrier, supported on goal posts and provided with bunting shall be erected to ensure that jibs are brought below the danger level before passing under the lines.

6) INSPECTIONS, TESTS AND EXAMINATIONS

The following inspections, tests and examinations of cranes, lifting appliances and lifting gear shall be undertaken by third–party inspection authority:

- No crane shall be allowed to work unless there are current records of tests and examinations. To be current, records must show that the crane has been tested and thoroughly examined satisfactory within the previous 12 months (or since the last substantial alteration or repair that could effect its stability).
- After each erection of crane or lifting appliance or after adjustment of the arrangements, the anchorage or ballasting arrangements shall be tested .
- The automatic safe load indicator shall be tested and examined before the crane is taken into use after erection, or alteration, which night effect the operation of the indicator .
- Pulley blocks, gin wheels etc . shall be tested and thoroughly examined before first use and there after thoroughly examined every 12 months .
- All wire ropes, chains and lifting gear shall be tested and examined before first use. test and examination shall be repeated for all chains and lifting gear, which have been altered or repaired. Additionally all ropes and lifting gear shall be thoroughly examined every six months.
- All hoists shall be tested and thoroughly examined before first use and after substantial alteration or repair, they shall also be thoroughly examined every six months.

Additionally , passenger hoists shall be tested and thoroughly examined after re – erection and each time the height of travel is altered .

7) RECORDS OF INSPECTIONS, TEST AND EXAMINATIONS

Copies of all records, tests and examinations is connection, shall be made available prior to lifting operations taking place.
Every lifting appliance and all its working gear, including automatic safe load indicator, and all gear used for an choiring shall be inspected at least every seven days. This inspection shall be carried out by the lifting supervisor who shall record his findings in "Lifting operations register" on the day of inspection (attachment A). This register shall be kept on site and be available for revision.
The test and examination of the automatic safe load indicator on jib cranes and mobile jib cranes before the crane is taken into use shall be recorded in " Lifting operations register " (Attachment) by an approved third – party inspection authority.
The test and examination of passenger hoists before first use, re – erection and each time the height of travel is altered shall be an approved third – party inspection authority.

8) SETTING UP cranes

8.1) Mobil cranes

The lifting supervisor shall check the setting up of outriggers and ensure the ground upon which the outriggers are to bear have sufficient good material beneath in order to give an acceptable ground bearing pressure.
Either good quality timber rail way sleepers or similar laid tightly side by side to form an even surface or alternately purpose made steel bearers as material for load distribution under outriggers shall be used.
The lifting supervisor shall ensure that there are no underground pipes, culverts, excavations etc. which way weaken ground under the weight of the crane.
The lifting supervisor shall inspect the outriggers before commencing any lifting and again frequently during the lifting operation. If necessary, stop the operation and re – movement.

8.2) Crawler cranes

The lifting supervisor shall ensure that crawler cranes are set on a level, horizontal base and that the ground upon which the machine is standing is solid and able to with stand the load .
The erection of the main boom and / or fly jib on crawler cranes, and the strut jibs on mobile cranes shall be carried out strictly in accordance with the manufacturer's instructions and under the supervision of the lifting supervisor .

8.3) TOWER CRANES

Before the erection or dismantling of a tower crane, a method statement shall be prepared before the work commences.
Tower cranes shall always be erected by experienced personnel under the direction of a supervisor with sufficient technical knowledge and experience of the type of crane.
The commissioning of the crane before use, including any testing required shall be carried out by an approved third – party inspection authority.
The procedures involved vary from manufacturer to manufacturer and as such all work involving the setting up of tower cranes shall be in accordance with the manufacturer's instruction .

9) OPERATION OF CRANES

Crane operators shall have satisfactorily completed a " crane operators " course run by an approved Third – party inspection authority.
Copies of training certificates shall be kept for record purposes.
Banks man / slingers shall be carried out by experienced personnel.
All cranes shall be fitted with the crane signal chart as per attachment D.

9.1) GENERAL PRECAUTIONS

During lifting operations, no person shall be positioned beneath the load, hoist or jib.
Similarly, loads shall not be slewed over the heads of personnel.
During lifting operations no load shall be slewed over any vessel, pipe or container containing hydrocarbons or other flammable or hazardless material.
No lifting appliance shall be left unattended with a suspended load.
After completing a lift, all slings shall be hooked back to the hook to avoid catching on obstructions.

If the automatic safe load indicator (ASLI) is activated during lifting operations, the operator shall not carry on with the lift, but shall return the load to its original position.
Where a lifting appliance has a traveling or slewing motion, a clearing of at least 1m shall be provided between the lifting appliance and any adjacent fixture. If this is not possible, the access shall be barricaded off to prevent personnel access.
The hoisting mechanism on a crane shall only be used for direct raising or lowering operations.
Crane jibs shall not be worked at a radius greater than specified on the test certificate.
All cranes shall be marked clearly with their maximum safe working loads.
If the lifting radius can be varied, a sign shall be displayed inside the cab showing the safe load at each radius.
Except for testing purposes, lifting appliances shall not be used for loads greeter than the specified safe working load.

9.2) SIMPLE AND REPETITIVE OPERATIONS

The lifting supervisor may in the case of simple or repetitive operations delegate some of his duties to another person, e.g. the driver and / or banks men. The lifting supervisor shall however still remain responsible for the lifting operation.

9.3) COMPLEX OPERATIONS

In the case of complex operations, the lifting supervisor shall be in attendance throughout the operation in order to anticipate untoward occurrences and to take any necessary action.

9.4) TANDEM / MULTIPLE LFTS

In the case of tandem and multiple lifting, the total operation shall be supervised by the lifting supervisor.
The banks men shall relay the signals given by the lifting supervisor and shall not originate their own, unless, in an emergency .

9.5) CARRIAGE OF PERSONS BY CRANE

Any crane used for the carriage of persons shall be one of a type where the controls function on the " dead man's handle " principle.
The personnel basket in which the personnel are to be lifted shall be purpose built, tested and certified by an approved third – party inspection authority, the maximum load clearly warred and at least 910mm deep. It shall not be obstructed by tools or other materials, and shall be prevented from spinning or tripping.
All personnel whilst inside the personnel basket shall wear full safety harness which shall be connected via a 1 tone sling to the hook .

9.6) LIFTING OF CONTAINER SKIPS

Only container skips, which have been designed and manufactured for crane use, shall be used. These shall be tested and marked to indicate their safe working

load and certified by an approved third – Party inspection authority and properly maintained.
Container skips shall be periodically and thoroughly examined. Strict control shall be exercised in the loading of skips, ensuring that the weight to be carried does not exceed the safe working load and that load is bevel and evenly distributed .

10) AUTOMATIC SAFE LOAD INDICATORS

All jib cranes with a safe working loading (SWL) of over one tone shall be fitted with an automatic safe load indicator (ASLI) to warn when the crane is being overloaded and is at risk of overturning.
ASLI's shall be set in accordance with the cranes rigged condition and manufacture's instructions. Only an approved third – party inspection authority shall be permitted to make ASLI adjustments and test its operation in order to sign " lifting operations register " (Attachment B) .

11) USE OF LIFTING QEAR

In addition, all banks men and slingers shall be instructed by the lifting supervisor to visually inspect every item of lifting gear daily when in use, or before being taken into use, and ensure up to date certification in place.
All lifting gear shall be color coded with a permanent paint. Any lifting gear that does not carry the agreed safety color code shall not be used.
A chart showing the safe working load of all the chains, slings and lifting gear in use shall be posted in areas where regular lifting operations are conducted.

11.1) SLINGS

When multi – leg slings are used, the included angle between the two widest spaced legs shall not exceed the angle which marked on the sling as that the SWL is rated. This is normally 90 but, occasionally, a maximum of 120.
When hooking back on bundles of materials, pipes etc., the hook shall not be hammered down to tighten the load as this, be sides damaging the hook, will cause an angle in excess of 120 between hook and chain or rope, and a corresponding over load on the chain or rope.
Bundled material shall be ordered " Securely bundled " or be bonded and secured or site. Timber packing shall be used for packing to prevent slippage or alternately " choker " slings shall be used.
Lifting chains, and wire rope slings shall bear a metal tag specifying the safe working load (SWL) affixed by the manufacturer.

11.2) HOOKS

Only " C " hooks fitted with safety catches or the proprietary safety hook is used i.e. where the safety catch itself is attached to the supporting sling and the hook is hinged from the catch.
The load on the hook shall be applied only at the buttoner of the circular part of the hook, whatever type of hook is in use.
In such censes where two eyes from spread slings are required to be brought back on to one hook , they shall be first brought into a shackle that in turn shall be hung freely from the hook.

11.3) SHORTENING AND JOINING CHAINS

Chains shall be jointed only by means of approved devices and never by bolts, wires etc. Where it may be required to shorten the chain, then the sling shall be supplied with shortening clutches, which shall be used in accordance with the manufacturer's instructions.

11.4) UNSLINGING

When a load is landed, provision shall made to ensure there is sufficient room underneath it to with draw the slings, without dragging them or farcing them away from their position, since this will damage the slings and wake them unfit for use.

11.5) ABUSE

Slings shall only be used for slinging the loads for which they are designed in a proper manner. In particular, slings shall never be used for toning vehicles .

11.6) CHECKING SLINGING

After initially lifting the load off the ground, the banks man or slinger shall check his slinging to ensure that the slings are not slipping or liable to slip, and that load remains slung at the intended angle.

12) SIGNALING

Authorized banksman, also known as slingers or signalers who shall have sufficient experience and undergone training in the control, slinging and signaling of lifting operations shall be appointed.
The banks man shall be fit, with particular reference to good eyesight, hearing and reflexes and shall be a person of sufficient stature to enable him to handle the often very heavy items of slinging equipment which may be used.
Signals shall be given to crane drivers only by authorized persons i.e. the banks man, who may also be known as the slinger or signaler.
Hand signals shall be given strictly in accordance with the well – established code shown in attachment D.
The banks man shall wear a high visibility waistcoat to enable the driver both to see the signals clearly and be reassured that the person giving them is authorized.
If radio are to be used as the form of communication between banks man and driver, they shall be maintained in first class condition and the person using them shall speak clearly, distinctly and in a common agreed upon language.
Bad language be strictly avoided when using radios.
Once a banks man has been appointed, strict discipline shall be imposed to ensure that no other person gives signals to the driver for any move other than the emergency stop.

13) HOISTS

13.1) ENCLOSURE

At all points where persons are liable to be struck by the moving platform or cage, the hoist way shall be protected by an enclosure. where access is required, gates shall be fitted.
The enclosure shall be at least 2M in height, but where there is a possibility that materials may fall out of the hoist way from the hoist platform, the hoist way shall be enclosed with mesh to its full height.
Every gate in the host way of a passenger – carrying hoist shall be fitted with inter locks, which shall ensure that the gate can only be opened when the hoist cage in stationary and level with it.
If shall not be possible to move the hoist cage away from a level until the gate has been closed .

13.2) ERECTION & DISMANTLIG

The erection and dismantling of hoists shall be performed under the supervision of the lifting supervisor who shall ensure that the erection personnel work strictly in accordance with the manufacturer's instruction for the hoist. These instructions shall be on site for the duration of the hoist erection, use and dismasting.

13.3) OPERATORS

An authorized person shall be appointed as the operator of a hoist who shall be trained in its use.
The hoist operating rope, lever or other controls shall be so positioned that the hoist can only be operated from one point.
That point shall be manned by the one person authorized to operate the hoist.

13.4) LOADING

Every horst cage and plat from shall be marked clearly with it's safe working load, and the persons charged with the responsibility of loading and unloading hoists shall have a good knowledge of the weight of items that they are placing on the platform.

13.5) GOODS HOISTS

The use of goods hoists for the carriage of persons shall be prohibited and a notice to this effect shall be displayed. Personnel access is permitted solely for loading and unloading the hoist platform.

13.6) PASSENGER HOISTS

Passenger hoists are permitted to carry goods provided that the total load of passengers and Goode does not exceed the rated safe working load of the machine.
The Operator of a passenger hoist shall be instructed that, whenever he leaves his post, he shall remove the key from the controls and take it with him.

Form-1

Name of contractor

Address of site ----------

Work commenced Date ----------

LIFTING APPLIANCES

Aerial cableways, aerial ropeways, crabs, cranes, draglines, excavators, gin wheels, hoists, overhead runways, piling frames, pulley blocks, sheer legs, winches.

Description of lifting appliance and means of identification	Date of inspection	**Result of inspection** (including all working gear and anchoring or fixing plant or gear, and where required the automatic safe load indicator and the derricking inter locks) **State whether in good condition**	Name and signature of person who made the inspection

HSE-P13/A-A	Issue:0	00/0/0000

Form- 2

Name of contractor

Address of site ----------

Work commenced Date ----------

AUTOMATIC SAFE LOAD

INDICATORS

Description of lifting appliance and means of identification	**Date of test**	Type of automatic safe load indicator	**Operation of indicator State whether indicator operates correctly**		Name and signature of person who made the inspection
			Hoisting &lowering	**Derricking , lifting or when radius varied**	

HSE-P13/A-B	Issue:0	00/0/0000

Form-3

Revision 0

Name of contractor

Address of site ----------

Work commenced Date ----------

HOISTS USED FOR

CARRYING PERSONS

Description of Crane and identification	Maximum height of travel of the cage as tested (meters)	Date when last erected or height of travel last altered	Date of test an examination	Result of test and examination State whether in good order	Name and signature of person who carried out the test and examination

HSE-P13/A-C	Issue:0	00/0/0000

Attachment – D: Crane Signals

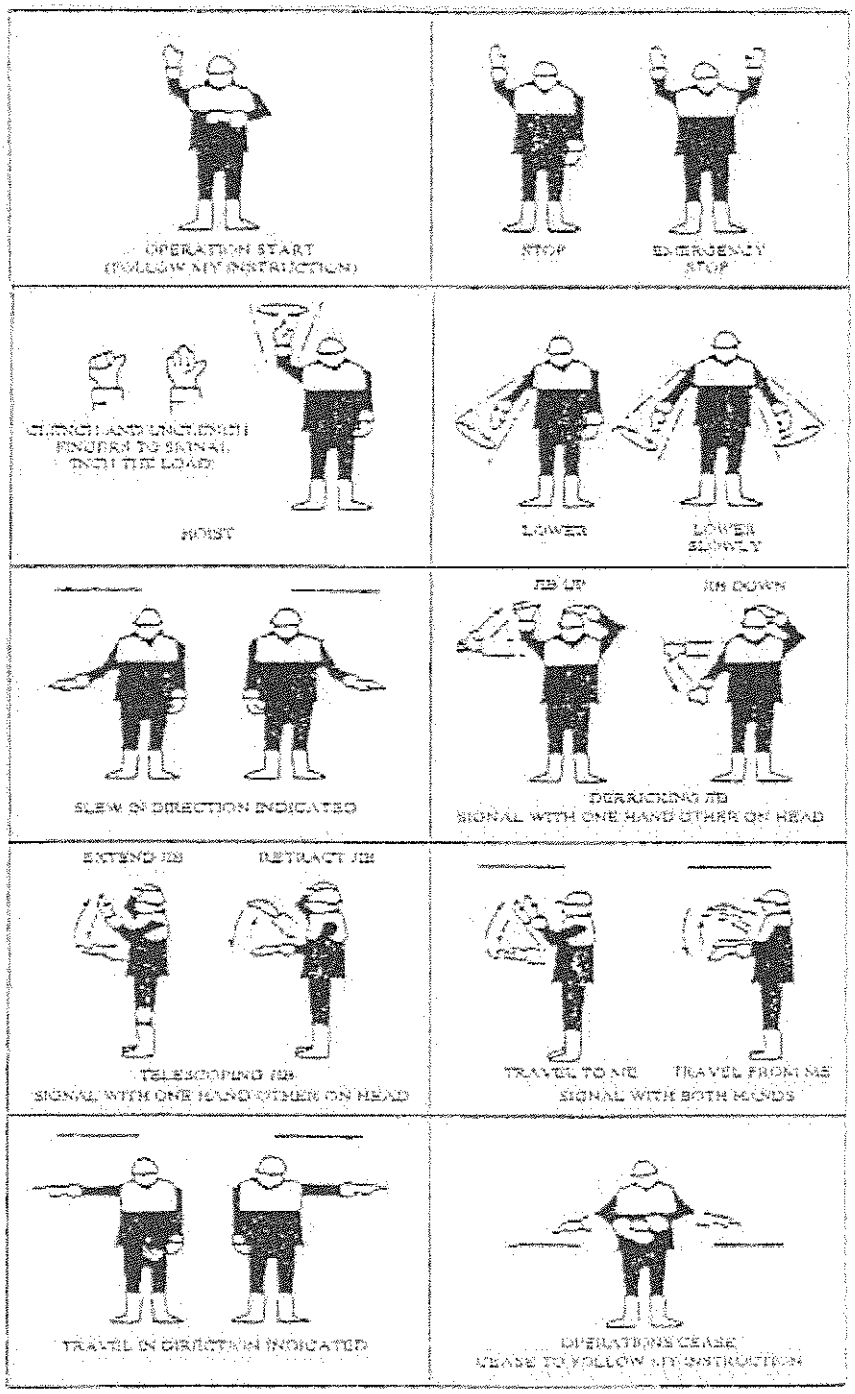

Records	Retention Time
LIFTING APPLIANCES HSE-P13/F-1	3 years
AUTOMATIC SAFE LOAD HSE-P13/F-2	3 years
HISTS USED FOR HSE-P13/F-3	3 years

Appendix

HSE-M1-P14

EXCAVATION

EXCAVATION

Department	Document Type	Document Title
HSE	EXCAVATION	EXCAVATION

Issue Approval	
Prepared By	**Approved By**
Bahaa Eddin Weld Ali *Sr.Safety Engineer*	Dr. Mohammad Al-Sulaity *Manager, HSE*
Signature:	**Signature:**

Issue Record

Issue No.	Date	Reason for re-issuing Procedure
0.0	14/10/2004	First issue of the Procedure.
1.0		
2.0		
3.0		
4.0		
5.0		

Review Frequency : Yearly.

Table of Contents

Contents	Page
Title Page	1
Document Control & Issue Record Page	2
Table of Contents	3
Purpose	4
Scope	4
Responsibilities & Authorities	4
ABBREVIATIONS & TERMINOLOGIES	5
BEFORE WORK STARTS	6
UNDERGROUND OBSTRUCTIONS	6
GENERAL PRECAUTIONS	6-7-8
ACCESS AND EGRESS	8
EDGE PROTETION, MARKERS AND FIXED LIGHTING	8
BACKFILLING	8
HYDRAULIC / TIMDER SHORING FOR TRENCHES	8
CROSSING PIPELINES	9
CROSSING HIGH VOLTAGE ELECTRICAL OVERHEAD TRANSMISSION LINES	9
AREAS OF ARCHAEOLOGICAL AND HISTORICAL INTEEREST	10

Form-1

Excavation Inspections

ATTACHMENT A

MAXIMUM ALLOWABLE SLOPES

ATTACHMENT B

SOIL CLASSIFICATION SYSTEM

1) Purpose

The information contained in this part is designed so to ensure that personnel who are involved in excavation work, or who may come into contact with such work, are provided with a safe working environment.

2) Scope

In carrying out an excavation, the soil conditions can vary widely, often in short distances. No soil, whatever its nature, can be relied upon to support its own weight for any length of time. Therefore, unless an excavation cab be battered to a safe slope, the sides will need supporting to prevent the possibility of collapse.

A safe working environment achieved through:

- Insuring all excavation work is planned well ahead prior to any excavation work taking place, ensuring any required protection shoring systems are provided and used.
  Insuring any underground obstructions that are in the area are clearly identified and precautions put is place to avoid accidental contact with the obstructions

3) Responsibilities & Authorities

All aspects and materials of an excavation operation, including the shoring, shall be inspected by a trained, qualified line supervisor to ensure that there is no danger of collapse.

4) Abbreviations & Terminologies

Excavation	Any man - made cavity, leveling, clearing or depression in the earth's surface, including its sides, walls, and faces, formed by earth removal and producing unsupported earth conditions by reason of the excavation.
Trench excavation	A narrow excavation made below the surface of the ground. In general, the depth is greater than the width, but the width of a trench is not greater than 4.5 meters (15 feet).
Protective systems	Methods used to protect employees from cave – ins, from materials that could fall or roll into the excavation onto the workers or from coupes of adjacent structures. Protective systems include supports, sloping and benching, shields and other means to protect workers.
Shoring	Hydraulic, timber or mechanical systems that support the sides of an excavation, designed to prevent cave – ins.
Hydraulic shoring	A per – engineered support system of hydraulic cylinders (cross – braces) used with vertical rods (uprights) or horizontal rods designed specifically to support sidewalls of an excavation to prevent cave – ins.
Benching	A method of protecting employees from cave – ins by excavating the sides of an excavation to from one or a series of horizontal steps, with a vertical rise between steps.
Sloping	A method of exacting in which the sides of an sides of an excavation are laid back to a safe angle to prevent cave – ins. (The safe angle required varies with different types of soil, exposure to the elements and superimposed loads. There is no single angle of repose. Soil classification must be identified to select safe sloping and benching methods). (see Attachment B and C).
Trench boxes	A structure that is able to with stand the forces imposed on it by cave – ins, and in the process, protects employees the structure.

4) Before work starts

In order to begin excavation work with minimum risk to men, plant and equipment and to enable the work to proceed without interruption, the following factors shall be considered before the job starts:-

- Size and purpose of the excavation.
- Nature of the ground including the proximity of made – up ground.
- Stability of adjacent structures.
- Position of underground obstructions such as pipes, electric cables, and other utilities.
- Position of underground of archaeological and historical interest (in known areas).
- Weather and soil moisture conditions, especially high water table.
- Sources of soil vibrations (highway traffic, machinery, etc).
- Adjacent roads and footpaths.
- Method of excavation.

Consideration of these factors will indicate the safety measures that must be implemented to proceed with the job and whether the sides of the excavation can be sloped and benched to a safe angle or whether other protective systems will be required. It is important to provide adequate and suitable protective system for use whenever excavation work is to be carried out to a depth of 1.2 meters (4 feet) or mars.

Excavation work to a depth of less than 1.2 meters (4 feet) may be also require protective systems.

A Hot / Cold work permit and excavation certificate shall be obtained prior to excavation work commencing in a restricted area. For excavation work outside a restricted area, only an excavation certificate is required.

5) Underground obstructions

Whenever the presence of underground pipes, cables, or structures is known or suspected, mechanical excavators shall not be used until all such obstructions have been exposed by hand digging.
Mechanical excavators shall not be used within 3meters (10 feet) of any such obstruction and including, well heads and exposed pipes. In certain and special circumstances, this critical distance way be evaluated, modified, and supervised by an authorized and qualified person. Pneumatic breakers shall only be used where necessary to break concrete or other hard surfaces.

6) General precautions

6.1) Shoring protective systems

As soon as an excavation reaches a depth of 1.2 meters (4 feet) suitable shoring shall be installed or the sides sloped back to a safe angle. Shoring may be of timber or any other suitable material, such as steel sheet piling.

The determination of the angle of slopes, benches, or the choice and design of other protective systems shall be based on evaluation of pertinent factors such as:

- Type of soil.
- Depth of cut.
- Possible variations in water content of material while the excavation is open.
- Anticipated changes in materials from exposure to air, sun, or water.
- Loading imposed by structures, equipment, overlying material, or stored material.
- Vibrations from equipment, blasting, traffic, or other sources.

Excavation shall not be sloped at an angle greater than one and one – half horizontal to one vertical.

All excavations shall be inspected subsequent to any rain.

A qualified and authorized person shall design the shoring system. The system design shall meet accepted engineering requirements according to the above pertinent factors. Materials used shall be in good serviceable condition, and timbers shall be sound, free from large or loose knots, and of proper dimensions.
Temporary crossings for personnel shall be provided over any trench in access of 1.5m in depth.
Portable trench boxes may be used for the protection of personnel in lieu of a shoring system or sloping.
Temporary crossings should be at least 600m wide and provided with handrails.
Trench boxes shall be designed, constructed and maintained to provide protection equal to or greater than the sheeting or shoring required.
All pits, trenches and excavations shall be roped off and provided with suitable warning signs.

6.2) Inspection

All aspects and materials of an excavation operation, including the shoring, shall be inspected by a trained, qualified, and designated person every day prior to use, to ensure that there is no danger of collapse.
Excavations that are open for 7 days or more shall be inspected in addition to the above every 7 days and the results recorded in the " Excavation inspection register " (see Attachment A).

6.3) Clearance

In order to provide a safe footing at the edge, and to prevent spoil falling into an excavation, a clear space at least 1m (3 feet) wide shall be maintained on all sides.

6.4) Mechanical excavator

Workers shall not be permitted to work underneath or in places where they could be struck by any part of a mechanical excavator. During mechanical excavation operation, workers are instructed to communicate with the site supervisor or the designated person on all the work celestials prior to all activities. A complete sit assessment must be performed, and adequate precautionary measures must be in place when pipelines, electrical cables, etc. are in the vicinity.

6.5) Walk ways

When employees, equipment, or embers of the public are required or permitted to cross over an excavation, a close planked bridge of walkway with standard guardrails shall
be provided and kept clear of excavated materials or other tripping hazards. No footpath shall be undermined unless properly shored.

7) Access and egress

Safe means of getting into and out of an excavation shall be provided at intervals not exceeding 7.5m (25 feet). Ladders shall conform to the requirements set out in part 11 in this manual. Scaffolding, be placed at an angle of 75 degrees, and extend at least 1.0m (3feet) above the stepping off point. Ladders shall be securely fixed.

8) Edge protection, markers and fixed lighting

Whenever it is necessary to place or operate power shovels, derricks, trucks, materials, soil banks or other heavy objects on a level above and near an excavation, the side of the excavation shall be sheet – piled, shored, and braced as necessary to resist the extra pressure due to such superimposed loads.

When mobile equipment is utilized or allowed adjacent to excavations, substantial stop logs or barricades shall be installed. If possible, the grade should be away from the excavation. If men or vehicles are in the vicinity after dark, fixed warning lights shall be used to mark the limits of the work.

Excavations up to a depth of 2m shall be barricaded off by means of warning tope. Excavations of a depth of 2m or moor or where other dangers exist e.g. water, shall be provided with rigid barriers and require a confined space entry certificate.

9) Backfilling

Backfilling and removal of trench supports shall be accomplished first by backfilling up to a level allowing for the removal of the lower braces. A nether layer of backfill shall be positioned in the trench to the next layer of braces
to be removed. Removal of trench supports shall progress together with the backfill from the bottom of the trench. In unstable soil, ropes shall be used to pull out the jacks or braces from above after employees have cleared the trench.

All excavations shall be backfilled and consolidated, and the surface shall be left in good condition as soon as is practicable.

10) Hydraulic / Timber shoring for trenches

Hydraulic / Timber shoring shall be provided as a method of protection against cave – ins in trenches that do not exceed 6.1m (20 feet) in depth. Shoring for trench depths exceeding 6.1m (20 feet) shall be purpose designed.

11) Crossing pipelines

The field manager shall be given a minimum of 7 days advance notice of the intention to excavate in the vicinity of existing pipelines.

Prior to excavation work, a hot / cold work permit together with an excavation certificate shall be issued, for any work within 30m on each side of any exposed oil or gas pipeline.

Restrict personnel and vehicles to cross trunk lines and flow lines by recognized and established tracks.

In the event that no established tracks exist the following temporary crossings shall be constructed:-

- **Buried lines:-** Cover with a minimum 600mm depth of sand and 300mm of compacted gatch. Sand and gatch shall be leveled to a minimum 900mm above original grade level.
- **Surface lines**:- Cover with a minimum 900mm depth of clean, aggregate - free sand and 450mm of competed gatch. Sand and gatch shall be leveled to a minimum of 1350mm cover over flow line.

All routes of buried pipelines in the vicinity of the proposed excavation shall be accurately established prior to the excavation taking place.

Excavate by hand shovel only within a horizontal distance of 3meteres from any oil or gas pipelines.
Provide adequate support for excavated pipe line.
Where permanent hard top roads are proposed to cross existing pipelines, installing approved reinforced concrete culverts shall protect these pipelines.

New buried pipelines and other services shall cross beneath existing buried pipeline with 1m minimum vertical separation.

12) Crossing high voltage electrical overhead transmission lines

The field manager shall be given a minimum of days advance notice of the intention to excavate in the vicinity of existing overhead lines.

Prior to excavation work, a Hot/Cold work permit together with excavation certificate shall be issued for any work within 30m on either side of an electrical transmission line.

Do not excavate within 10m of an overhead line support pole.

Restrict vehicle passage to recognized and established track crossings. A Hot/Cold permit shall be issued for any heavy vehicles that have to pass or work beneath overhead lines.

Vehicles passing parallel to the overhead lines should maintain a minimum clearance distance of 30m from the lines.

13) Areas of archaeological and historical interest

The Qatar archaeological survey shall be notified by the Kahramaa before excavation starts in known areas of archaeological and historical interest. An archaeological expert may be required to observe excavation work in sensitive areas.

Should Kahramaa uncover artifacts and structures of potential archaeological and historical interest during excavation, work shall stop and the appropriate divisional manager informed immediately.

Work shall not re – commence until instructions are received from the Kahramaa representative.

Form-1 Revision: 0

Name of contractor

Address of site ----------

Work commenced Date ----------

Excavation Inspections

Location and description of excavation	Date of inspection	**Result of inspection State whether in good**	Name and signature of person who made the inspection

HSE-P14/F1	Issue:0	00/0/0000

Attachment A–

MAXIMUM ALLOWABLE SLOPES

MAXIMUM ALLOWABLE SLOPES

SOIL OR ROCK TYPE	MAXIMUM ALLOWABLE SLOPES (H:V) FOR EXCAVATIONS LESS THAN 20 FEET DEEP
STABLE ROCK	VERTICAL (90%)
TYPE A	¾ :1 (53%)
TYPE B	1 (45%)
TYPE C	1 – ½ :1 (43%)

NOTES:

1. Numbers shown in braches next to maximum allowable slopes are angles expressed in degrees from the horizontal.

2. A short term maximum allowable slope of 1/2H : 1V (63%) is allowed in excavations in Type A soil that are 12 feet (3.67m) or less in death. Short – term maximum allowable slopes for excavations greater than 12 feet (3.67m)in depth shall be 3/4H : 1V (53%).

3. Sloping or benching for excavation greater than 20 feet deep shall be purpose designed by the CONTRACTOR and submitted to the Kahramaa REPRESENTATIVE for review/approval.

Attachment – B

SOIL CLASSIFICATION SYSTEM

A method of categorizing soil and rock deposits as types A,B and C in decreasing order of stability. Soil type is determined by analysis of the soil's properties and how it performs under exposure to the elements and superimposed loads.

Type A:
Cohesive soils with an unconfined compressive strength of 1.5 ton per square foot (TC) (144kpa) or greater are classified as type A. example of cohesive soils are clay, loam. Cemented soil is Type A. however, no soil is Type A if one or more of the following conditions are true:

- the soil is fissured
- the soil is subject to vibration from heavy traffic, pile driving, or similar effects.
- The soil is part of a sloped, layered system where the layers dip into the excavation on a slope of four horizontal to one vertical (4H: IV) or greater.
- The material is subject to other factors that would require it to be classified as a less stable material.

Type B:
Soils classified as Type B are :

- Cohesive soils with an unconfined compressive strength greater than 0.5 tsf
(48 kpa) but less than tsf (144 kpa).
- Granular cohesion-less soils including angular gravel (similar to crushed rock),silt, silt loam, sandy loam and in some cases, silty clay loam and sandy loam clay.
- Previously disturbed soils except those, which would otherwise be classed as Type C soil.
- Soil that meets the unconfined compressive strength or cementation requirements for Type A, but is fissured or subject to vibration.\dry rock that is not stable
- Material that is part of a sloped, layered system where layers dip in to the excavation on a slope less steep than four horizontal to on vertical (4H: IV) but only if the material would otherwise be classified as Type B.

Type C:
Soils classified as type C are :

Cohesive soils with an unconfined compressive strength of 0.5 tst (48 kpa) Or less.

Granular soils including gravel. And loamy sand.

- Submerged soil or soil from which water is freely seeping
- Submerged rock that is not stable

Material in a sloped layered system where the layers dip into the excavation or a sloped of four horizontal vertical (4H: IV)

Records	Retention Time
Excavation Inspections HSE-P14/F1	3 Years

Appendix

HSE-M1-P15

Demolition Operations

Demolition Operations

Department	Document Type	Document Title
HSE	Demolition Operations	Demolition Operations

Issue Approval	
Prepared By	**Approved By**
Bahaa Eddin Weld Ali *Sr.Safety Engineer*	Dr. Mohammad Al-Sulaity *Manager, HSE*
Signature:	**Signature:**

Issue Record

Issue No.	Date	Reason for re-issuing Procedure
0.0	14/10/2004	First issue of the Procedure.
1.0		
2.0		
3.0		
4.0		
5.0		

Review Frequency : Yearly.

Table of Contents

Contents	Page
Title Page	1
Document Control & Issue Record Page	2
Table of Contents	3
Purpose	4
Scope	4
Responsibilities & Authorities	4
General considerations and precautions	6
Hand demolition operation	6-7
Demolition ball	8-9
Pusher Arm	9-10
Deliberate collapse by means of wire rope	10

1) Purpose

An accident in all phases of demolition operations is much more likely to be fatal than in any other construction work. The main causes of accidents in demolition have been established as premature collapse of buildings and structures, and falls from working places and access routes.
The purpose of this part is to ensure that demolition and all its associated work are planned at an early stage to enable personnel to well informed and aware of all the dangers involved and decide on the safest method of work

2) Scope

2.1) Preparation and planning

2.1.1) Demolition survey

Prior to demolition a detailed and comprehensive survey shall take to specifically identify removal of salvaged equipment, mounted equipment and machinery, structural problems and risks associated with flammable substances, and substances hazardous to health and the environment.
The survey shall take into account any adjoining properties likely to be affected by the works.
A method statement shall be produced which shall indicate the precautions to combat the hazards, protect workers and remove hazardous materials, together with the preferred demolition procedure, following the demolition survey.

2.1.2) Method statement

A detailed method statement shall be produced, prior to work starting.
The method statement shall identify and their solutions, and from a reference for the site supervision. The method statement shall be easy to understand, shall be known to all levels of supervision and employees involved in the demolition, and shall include such matter as:

- The sequence and method of demolition or dismantling of the building or structure with details of personnel access, working platforms and machinery requirement.
- Specific details of any pre - weakening of structures which are to be pulled down or demolished with explosives.
- Arrangements for the protection of personnel and the public and the exclusion of unauthorized persons, with details of areas outside the site boundaries that may need to be controlled to improve safety during critical aspects of the work.
- Details of the removal or making safe of electrical and other services and drains.
- Details of temporary services available or required to be used.
- Details of methods for dealing with flammable materials which may have been retained or deposited as residue in process machinery, pipe work or storage.
- Details of methods to establish the presence of substances which may be hazardous to health and the environment, the methods to be used for their disposal and any necessary protective equipment.
- Arrangements for the control of site transport used for the removal of demolition debris.

- Identifying persons with responsibilities for control and co - ordination of safety arrangements.

3) Responsibilities & Authorities

Through the implementation of the rules contained in this part, Line Management responsibility is to provide a safe system of work .

4) General considerations and precautions

4.1) Protection of the public

A fence shall be erected enclosing the demolition operation. The fence shall not be less than 2m high and shall not be capable of being easily climbed. Access gates shall be secured outside working hours. Warning signs shall be installed along the fence.
At sites where it may not be reasonably practicable to erect a perimeter fence, excavations shall be fenced, vehicles and plant shall be effectively immobilized and electricity supplies shall be isolated or enclosed in locked compounds.
Outside of working hours, ladders which provide access from the ground to the first landing place shall be removed and stored in a secure area.
Where necessary, debris fans and façade nothing shall be provided to prevent persons being accidentally struck by falling objects. Debris funs shall not be used as a means of access or allowed to become loaded with debris.

4.2) Services

The demolition survey shall have noted the location of all known services on and adjacent to the site whether they are overhead or underground. The erection of hoardings and fences shall be planned with due regard to existing services buried near their footings and in such a manner as to maintain access at all times to fire hydrants, valves, jointing chambers etc.

4.3) Temporary Electrical service

Temporary electrical services shall be installed in compliance with part No.**18**– Electrical safety contained in this Manual.

4.4) Flammable Materials

Prior to working on tanks, pipe work and other such plant, isolate any plant that may conation flammable waterfalls shall be isolated. Any residual flammable material in the plant shall be rendered safe.

4.5) Asbestos

Where demolition work exposes or is likely to expose any person to asbestos, part No.**20**Asbestos control contained in this manual shall be complied with.

4.6) Other Substances Hazardous to Health

Where the demolition may expose employees to substances hazardous to health, part No.19control of Substance Hazardous to health contained in this manual shall be complied with.

4.7) Sequence of Demolition Operation

The sequence of operation shall be established to clear the accumulated debris on a regular basis so that floors
will not become overloaded and horizontal pressure on walls are avoided.

4.8) Controlled Areas and safe distances

The method statement shall set out areas affected by each phase of the work, to which access will need to be controlled. Restrictions and control shall be necessary during:

- The dropping of debris.
- Pre - weakening activities.
- Deliberate collapse or pulling over of buildings.

During debris dropping, a radius of 6w, or half the drop height (whichever is the greater), shall be used to determine the restricted area to be kept clear.
Similarly, a space of 6w minimum width from the face of the building to be demolished is allowed for the operation of cranes, grabs, balling machines, pusher arms and similar equipment. If wire rope pulling is used, a distance of three – quarters of the exposed length of pull rope shall be allowed on either side of the rope and also behind the winch or pulling vehicle.

5) Hand demolition operation

Buildings and other structures shall generally be demolished in the reverse order to which they were constructed.

Where work cannot be done safely from the ground or from part of a building or structure, scaffolding shall be provided and maintained in a safe condition.
Where material is to be allowed to fall freely to the ground then the height of fall shall not exceed half the available horizontal distance, or 6m, whichever is the greater, unless sufficient, protection is made available to adjacent buildings, general public and site personnel.
Where material would other wise be dropped from a structure into over to which site personnel or numbers of the public may have access, then chutes shall be used.
Chutes shall be so positioned that all material will fall into the skip or other containers.
Chutes shall be totally enclosed and shall be constructed so that there is no projection inside which way cause a blockage of material.
When there is a risk of material ricocheting from skips, particularly as they become full, additional screens shall be fixed to the skips to contains such material.
Excessive debris shall not be allowed to build up on floors against lower walls or other parts of a building structure.
When only a portion of a building or structure is to be demolished, the stability of the remaining part shall be checked during and after demolition.
At all times, walls and supporting numbers shall be left in a stable condition.

Regular clearing operations shall be carried out.
Where sheeted scaffolders are provided to contain flying debris or dust the wind loading on the scaffold shall be taken into account.
Competent scaffolders shall only remove the ties securing and scaffold to the building or structure. As the building is demolished, scaffolds shall be reduced to the extent necessary to ensure the excessive scaffolds do not remain unsupported as the building height is reduced.
Checks shall be made to ensure that the structure to which the scaffold is tied is strong enough to provide a suitable anchorage during the period that the tie is required.
Care shall be taken to support beams or columns whilst they are being cut.
Members (beams) way spring, due to the removal of restraints. Each member shall be lowered to the ground.
When using mobile access platforms etc, refer to part No.**12**access, egress, and working at height.

6) Demolition ball

The size and use of a demolition ball shall be in accordance with the erne manufacturer's recommendations.
An anti - spin device shall be used on the hoist rope in conjunction with the ball attachment, all of which shall be inspected twice daily and replaced as necessary.
The cab of the appliance shall be robust enough to with stand impact from flying debris, the cab windows shall be of shatter proof glass with the added protection of a suitable steel mesh.
The machine shall be used on firm, level ground and the operator shall be fully trained and experienced in the use of such equipment and techniques in demolition operations.

Three techniques using this method may be used

- **Vertical Drop:** using this method the ball is suspended above the building or structure and the brake released, allowing the ball to fall freely on to the building or structure.

- **Swinging in line with the jib:** An additional rope is attached to the demolition ball from a second drum on the crane, and used to pull the ball forwards towards the machine.

- The pulling rope is released allowing the ball to swing outward in line with the jib striking the building or structure. The secondary rope is used to control the limit of swing of the ball.

Slewing jib: This technique can impose excessive stresses on the machine and jib that must be suitably rated for the purpose and the ball attached to a secondary rope.

Factors which impose high operational stresses on the jib area:-

- Angle of slew – which must never exceed a total of 30%.
- acceleration of slew.
- Rate of checking slewing motion.
- Weight of ball.

- Height at point of impact.

Jib derricking for the purpose of swinging the ball shall not be permitted.
A crane shall have a current four – year test and twelve – month thorough examination certificate, as per the requirements set out in part No.**13**lifting operations.
A mobile carne shall have a radius load indicator fitted. If arcane has a maximum safe working load of more than 1tone it shall be fitted with an approved automatic safe load indicator. When a crane can be safely converted for balling operations and it is proposed to use it with demolition ball not exceeding 1 tone in weight, the crane shall be de – rated to a maximum safe working load of 1 tone or less by certification.
The automatic safe load indicator shall be disconnected to prevent it being damaged. The automatic safe load indicator shall be reconnected and the crane re – rated when it is returned to normal crane age duties with a safe working load exceeding 1 tone. This shall be performed in accordance with HSE Rules and conditions part No.**13**lifting operations.
When balling operations are carried out, personnel thoroughly conversant with the technique shall only do it.
Demolition ball methods shall not be used on buildings or structures where the only of the Jib would exceed 60° to the horizontal.
Where mobile cranes are used for demolition operations using a demolition ball, they shall be restricted to free fall vertical drop only.
Demolition ball methods shall not be used on parts of buildings or structures in excess of 30m in height.
Where there are attached buildings, the structure to be demolished shall be first be detached by hand methods so that there is a clear space of not less than 1m between adjoining buildings and the building to be demolished.
Care shall be taken to avoid the ball becoming trapped. If this happens, attempts shall not be made to free it by dragging or lifting actions, as this may over load the crane.
Personnel shall not be in the vicinity of the designated restricted area when work has commenced using demolition ball methods.
If material is to be allowed to fall freely and as a result may damage adjacent property or ricochet into arrears where numbers of the general public and site personas may have access, then steps shall be taken to contain such material by the provision of temporary screens, etc.
If there are no such screens then horizontal clearance of half the height of fall shall be maintained.

7) Pusher Arm

The equipment shall only be used in accordance with manufacturer's recommendations. The cab of the appliance shall be robust enough to with stand impact from flying debris, the cab windows shall be of shatter proof glass with the added protection of a suitable steel mesh grill. A deflector plate shall be fitted at the lower end of a pusher arm to prevent debris hitting the cab.
Operators shall be fully trained and experienced in the use of the machine.
The machine shall be used on firm, level ground. If terraces of debris are to be used to enable the machine to gain height, it is essential that the terraces be consolidated in order that the machine can be maintained on a level axis during operation.

Sufficient room shall be maintained for the machines to operate safely paying particular attention to the maintenance of a 2m minimum slewing clearance.
The height of the building to be demolished shall first be reduced by hand or other suitable method, to a level at which the machine can safely operate.
If the structure is attached it shall be separated from adjacent buildings by hand methods before work beings with the pusher arm.
On no account shall the point where the pusher arm is applied to a wall being demolished, be more then 600mm below the top of the wall.
The fall of debris shall be in the direction away from the machine.
If material is allowed to fall freely. and as result may damage adjacent property or ricochet into areas where members of the general public or site personnel may have access, then steps shall be taken to conation such material by the provision of temporary screens, etc.
If there are no such screens, than a horizontal clearance of half the height of the fall shall be maintained.

8) Deliberate collapse by means of wire rope

Structures shall be completely detached before work commences.
Only steel wire rope with a diameter of not less than 13mm shall be used.
The rope shall be inspected at least twice daily to ensure its strength has not been affected by damage or wear, and shall be replaced as necessary.
All sharp edges, which come into contact with the wire rope, shall be protected by packing or other means.
The wire rope shall be firmly attached at both ends by positive means e.g. shackles, eyes, etc
The tension shall be applied gradually, snath loading shall not be permitted. where a number of pulls are to be made, several wire ropes of sufficient length shall be attached prior to the first pull.
Where personnel are involved in securing wire ropes around buildings or structures, safe means of access and egress into working places shall be provided and maintained.
When the pulling operation commence, no personnel shall be in the area of the winch or tracked vehicle, closer than the operational length of the rope.
Any winch used for pulling operations shall be secured.
The cab of the appliance shall be robust enough to with stand impact from flying debris, the cab windows shall be of shatter proof glass with the added protection of steel mesh grills. winch operators shall have similar protection.
Wire rope puling methods shall not be used on masonry structures exceeding 21m in height.
The length of wire rope shall be at least equivalent to twice the height of the billing.

Where any pull has not achieved collapse, alternative methods shall be used. Under these circumstances, further work shall not continue until a method statement has been approved

Records	Retention Time

Appendix

HSE-P16

PLANT & MACHINERY

PLANT & MACHINERY

Department	Document Type	Document Title
HSE	PLANT & MACHINERY	PLANT & MACHINERY

Issue Approval	
Prepared By	**Approved By**
Bahaa Eddin Weld Ali *Sr.Safety Engineer*	Dr. Mohammad Al-Sulaity *Manager, HSE*
Signature:	**Signature:**

Issue Record

Issue No.	Date	Reason for re-issuing Procedure
0.0	14/10/2004	First issue of the Procedure.
1.0		
2.0		
3.0		
4.0		
5.0		

Review Frequency : Yearly.

Table of Contents

Contents	Page
Title Page	1
Document Control & Issue Record Page	2
Table of Contents	3
Purpose	4
Scope	4
Responsibilities & Authorities	4
MAINTENANCE / INSURANCE / INSPECTION	5
DUMP TRUCKS, TRACTORS AND TRAILERS	5
VEHICLES WITH TIPPING BODIS	6
FORKLIFT TRUCKS	6
TRANSPORTATION OF EARTHMOVING VEHICLES	6-7
CRAWLER TRACTORS (DOZERS)	7
SCRAPERS	7
360° EXCAVATORS	7
BACKHOEE LOADERS	8
TRENCHERS	8
LOADING SHOVELS	8
GRADERS	9
PLANT RECOVERY	9
MACHINERY	9-10

1. Purpose

The purpose of this part is to ensure plant and machinery is well maintained and used only for the work for which it was designed, by personnel who have been trained in the procedures and functions relevant to the specific piece of equipment. The use of plant mobile / heavy and machinery poses a number of risks for operations and persons in the immediate vicinity, as such clear safe work procedures are paramount in ensuring safe systems of work are provided and maintained .

2. Scope

The purpose of this part is to ensure plant and machinery is well maintained and used only for the work for which it was designed, by personnel who have been trained in the procedures and functions relevant to the specific piece of equipment. The use of plant mobile / heavy and machinery poses a number of risks for operations and persons in the immediate vicinity, as such clear safe work procedures are paramount in ensuring safe systems of work are provided and maintained .

This is achieved through:

- Ensuring operators have been trained in and hold the appropriate Qatari driving license for the plant to be drivers and operators.
- Ensuring plant is maintained in accordance with the manufacture's recommendations.

3. Responsibilities & Authorities

Through the implementation of the rules contained in this part, Line Supervisor responsibility is to provide a safe system of work .

4) MAINTENANCE / INSURANCE / INSPECTION

All heavy plant shall be serviced and maintained in accordance with manufacture's recommendations .
Copies of insurance, service, and main Terrance records shall be kept for record purposes.
All mobile / heavy plant shall be provided with warning flasher beacons and used during operation.
The manufacture's specifications as to permitted load and weight shall be complied with.
All mobile / heavy plant equipment to be provided with high visibility reflective indicators and warning sighs as appropriate.

4.1) Safety Check

operators shall conduct a daily inspection by utilizing a check list consisting of , but not limited to , the following items :-

- Fuel
- Water
- Oil
- exhaust system
- Tier pressures and conation
- wheel nuts
- Efficiency of light / horn / reversing, light / reversing, alarm / direction, indicator / flashing, beacons / windscreen, wipes / washers etc
- Batteries – secure, clean, corrosion free and with adequate electrolyte condition

Defects, damage, or other conditions considered by the operator as being likely to cause unsafe driving operations and conditions shall be reported to the immediate supervisor in order to take the appropriate and necessary measures.

5) DUMPTRUCKS, TRACTORS AND TRAILERS

Passengers shall not be permitted to ride any dump trucks, tractor or in any trailer.
" No passenger " signs shall be clearly displayed on all dump trucks, tractors and trailers.
The operator ensure that the machine is maintained in a satisfactory condition and notify his immediate supervisor of any defects – paying particular attention to " vehicle safety checks ".
Trailers shall not be towed on public roads unless the trailer fitted with the regulation plate displaying the registration towing vehicle . the operator shall be trained and authorized, with the appropriate and valid license.
After completion of the towing operation, trailer brakes shall be applied or wheel chocks used prior the disconnecting the trailer. on articulated trailers, the loch mechanism of the support leg shall be fully engaged before the tow vehicle is disconnected. Persons shall stand well back during his operation.

6) VEHICLES WITH TIPPING BODIES

No person shall enter the space beneath the raised body of a tipping vehicle. where this is necessary, for maintenance or repair, the body shall be securely blocked and supported.
When loads are being discharged, additional care shall be take if forward / reverse movement is necessary to dislodge loose material.
In no circumstances shall tipping vehicles be driven with the body in the raised position.

7) FORKLIFT TRUCKS

Forklift trucks (e.g. rough terrain mast type and telescopic jib) shall only be operated by trained and authorized persons.
Inspection and maintenance shall be carried out as required by the machine's manufacturer and shall include a recorded weekly check, six monthly thorough examination, in addition to examination after an accident , major repair of modification.
The six monthly thorough examination shall be carried out by an Kahramaa approved third party inspection authority. A copy of the test certificate shall be kept for record purposes.
If a load obstructs forward vision, the truck shall be driven in reverse (except when going uphill).
When negotiating the inclines , the load shall be kept " uphill ". If driver's vision is obscured, a banks man / flagman shall be provided.
The speed of the lift truck shall be appropriate to the circumstances, but on uneven surfaces and rough ground, the vehicle shall be driven at low speed with particular attention to breaks and edges of floor slabs and excavations.
Loaded lift trucks shall be moved with the forks kept as low as possible, taking into account the load and ground conditions. "Mast type vehicles" shall be tilted backwards. Particular attention shall be paid to overhead obstructions.
Unloaded lifts trucks shall be driven with the forks approximately 150mm off the ground.
Forklift trucks shall not be left unattended with the forks raised.
The machine shall not be used as a crane, unless the correct fittings are used as recommended by the manufacturer.

8) TRANS PORTATION OF EARTHMOVING VEHICLES

The machine operator shall be responsible, under the direction of the transporter driver, for the safe loading and off – loading of the machine.
The loading and off – loading area shall be large enough to allow for the movement of the machine, without striking obstructions or causing hazards to others.
The transporter shall be on firm level ground, correctly position, and its brakes engaged .
Any ramps shall be secured and long enough to keep the ramp angle low.
To prevent tipping, the transporter may need to be blocked. Any packing placed below the transporter deck shall be thick enough to prevent tipping. but not so thick that it would jaw in position during loading.
Before loading, the driver shall check the machine's transmission, clutch, brakes and steering, to ensure they are in correct working order.
When loading and unloading, the machine shall be lined up with the ramps, so that it shall not be necessary to turn the machine whilst on the ramps.

Loading and unloading shall be at the slowest possible speed particularly at the point of balance.
Careful movement of the machine is necessary on the transporter in order to centralize it etc.
The machine upon being loaded prior to removal from sit shall have its brakes engaged, be securely lased and loose items secured.

9) CRAWLER TRACTORS (DOZERS)

These machines shall be fitted with audible reversing alarm which are to be maintained in good working order .
Strict controls and supervision of both machine and nearby activities shall be under taken. The machine operator and persons working in the vicinity of the machine shall be made aware of each other's activities and work boundaries.
When clearing material from the top of a " soft fill tip or stockpile, a mound of material just back from the edge shall be provided , to act as a safety barrier. The machine shall approach the edge at right angles.
When traveling, the dozer blade shall be kept as low as possible, to allow maximum operator vision and machine stability.
If the machine is used for clearing scrub, or work where material, or objects could fallen the cab, then driver's cab shall be protected.

10) SCRAPERS

Motorized scrapers are essentially high – speed movers of soil, requiring well – maintained haut roads for efficiency and safety.
The haut road shall be sufficiently wide to accommodate the traffic using it.
If haul roads cross, and the amount of traffic warrants it such crossings shall be manned or contoured by lights.
A lateral distance of 25m minimum shall be maintained between working scrapers.

When working on gradients:

- Bowls shall be carried low at all times.
- Bowls shall not be over full.
- Turns shall be made uphill where possible or where necessary downhill with the bowl scraping on the ground surface.

When traveling, the bowl shall be high enough to avoid collision with the ground or any objects.

11) 360° EXCAVATORS

All excavators shall undergo a thorough examination at least once every twelve months by and Kahramaa approved third – party inspection authority. A copy of the test certificate shall be kept for record purposes.
360° excavators shall not be used for raising and lowering loads suspended from the bucket except in strict accordance with the manufacturer's specifications.
At all times a clear once of at lest 600mm shall be maintained between any part of the machine, particularly the ballast weight and the nearest obstruction . If this is not possible the area shall be fenced off.

No person may enter within the working radius of the machine without the knowledge of the operator.
Excavator buckets or loads shall not be slewed directly over personnel or vehicle cabs. Vehicles shall be loaded over the side or rear and material shall not be dropped from an unnecessary height. The manufacturers recommended bucket size shall not be exceeded.
Persons shall not remain on a vehicle that is being loaded with loose materials.
Overhangs shall be avoided at a high workface .
The wheels or tracks of the machine shall be at 90 to the workface, to enable quick withdrawal if necessary.
When operating on a gradient, the bucket shall not be extended too for in the downhill direction and travel shall be undertaken with extreme caution, to ensure the machine's stability.
Tires on wheeled excavators shall be in good condition and correctly inflated.
Outriggers, when fitted, shall be used when the machine is excavating.

12) BACKHOE LOADERS

In addition to the previous precautions the following shall apply:

- When the front shovel is being used, the backhoe attachment shall be in the travel position, with safety locking device in place.
- When operating the backhoe in poor conditions, the outriggers tend to sink, therefore, frequent stability of the machine.
- Backhoe loaders shall not be used for raising and lowering loads suspended from the bucket except in strict accordance with the manufacturer's specifications .

13) TRENCHERS

Trenching machines shall be fitted with a safety " slip clutch " on the digging mechanism, which stops the drive when an obstruction is encountered.
The operator shall manually disengage the digging mechanism, before attempting to remove the obstruction.
Turning of the machine, whilst clogging, shall be done cautiously.

14) LOADING SHOVELS

All loading shovels shall be fitted with an audible reversing alarm , which shall be maintained in good working order.
The tires of wheeled machines shall be in good condition and correctly installed.
The bucket shall be carried low when traveling.
When traveling up gradients, the load and bucket shall lead.
Harsh braking shall be avoided particularly when the bucket is loaded.
Loading shovels shall not be used for raising and lowering loads suspended from the bucket except in strict accordance with the manufacturer's specifications.

15) GRADERS

All graders shall be fitted with an audible reversing alarm, which shall be maintained in good working order.
Although designed for use on slopes, such works can be hazardous in wet conditions.
When working on a road used by other traffic, the blade shall display clearance flags that help to warn other vehicles of the width of the blade.
When working on a side hill road, the blade shall be angled towards the outer edge.
When scarifying across a slope, the blade shall be positioned across the machine to provide protection against tipping.

16) PLANT RECOVERY

The following rules are observed for plant recovery:

- Only one person shall give instructions .
- All persons shall be clear of tow ropes under load . The recovery vehicle shall have cab protection , in case of whiplash from a broken rope .
- Persons shall never be allowed to work beneath a machine when it is jacked up, unless suitable other means are used to supplement the machines own jacks or attachments.
- Any munch rope used shall be at right angles to the drum, and there shall always be a minimum of two full turns of rope on the drum.
- Obstructions shall be cleared using tools and not hands.
- Careful a assessment of load carrying capacity of chain and wire ropes used for towing shall be made. Such chins and ropes shall not be subsequently used for lifting operations.

A careful check shall be made of all recovery equipment to ensure that it is correctly applied, prior to attempting the recovery.

17) MACHINERY

All dangerous parts of machinery, including non – powered machinery shall be securely guarded or fenced, unless they are so placed or constructed as to be as safe as if they were so guarded.
Where a fixed or interlocked guard in not possible another a acceptable method is provision of an automatic safety device, which prevents the operator from lowing into confect with the dangerous part of the machine.
All guards shall be substantially constructed, properly maintained, and kept in position whilst the dangerous part is in motion or use.
The machine controls shall be positioned for safe and easy access by the operator and clearly identified.
Handles, hand wheels and levers shall be positions and spaced for handling, with ample clearance from other parts of the machine.
Braking systems, where provided, shall be maintained in good working order.

Persons operating machinery shall be trained. Training shall cover the following points:

- The legal requirements of machine safety.
- An outline of machine hazards and likely injuries.
- An outline of machine safeguards , the use and operation of guards.
- Use of personal protective equipment where applicable.
- The need for good housekeeping around the machine.
- The use of any necessary ventilation equipment.
- The need for adequate lighting.
- Any electrical, pneumatic or hydraulic hazards which way exist, and the precautions to be taken.
- How to assess equipment prior to routine use.

Records Retention Time

Appendix

HSE-M1-P17

PAINTING

PAINTING

Department	Document Type	Document Title
HSE	PAINTING	PAINTING

Issue Approval	
Prepared By	**Approved By**
Bahaa Eddin Weld Ali *Sr.Safety Engineer*	Dr. Mohammad Al-Sulaity *Manager, HSE*
Signature:	**Signature:**

Issue Record

Issue No.	Date	Reason for re-issuing Procedure
0.0	14/10/2004	First issue of the Procedure.
1.0		
2.0		
3.0		
4.0		
5.0		

Review Frequency : Yearly.

Table of Contents

Contents	Page
Title Page	1
Document Control & Issue Record Page	2
Table of Contents	3
Purpose	4
Scope	4
Responsibilities & Authorities	4
Abbreviations & Terminologies	5
LEAD PAINT : LIMITATIONS	6
PERSONAL PROTECTIVE EQUIPMENT (PPE)	6
FIRE PROTECTION	6
STORAGE	7
PAINTING BOOTHS	7-8
WORK PRACTICES	8

1. Purpose

The precautions contained in this in this part are designed so as to ensure a safe working environment for all persons involved in the use of paints and coatings.

2. Scope

Paints and coatings may contain a wide range of toxic, corrosive and flammable chemicals, there fore, only those chemically and formula suited to the activities shall be used, while considering the following:

- Utilizing at all times suitable alternatives to paint containing lead.
- Minimizing the use of paints containing any toxic solvents, which require special handling and respiratory or other personal protective devices in their utilization.

3. Responsibilities & Authorities

Through the implementation of the rules contained in this part, Line Supervisor responsibility is to provide a safe system of work

4) ABBREVIATIONS & TERMINOLOGIES

PPE	PERSONAL PROTECTIVE EQUIPMENT
LEL	Lower Explosive Limit
TLV	Threshold limit value
NFPA	National Fire Protection Association

5) LEAD PAINT: LIMITATIONS

Paints or coatings containing lead or zinc (or any other heavy metal) in any new solicitor shell not be used, whether industrial, domestic or in administrative buildings.
As it is hard to tell if old paint is lead based or not, wet stripping or wet sanding shall be used to remove all paints or coatings. Dry sanding shall never be used.
Metal surfaces which have been determined as being previously painted with a lead based paint, shall not be cut or welded without the use of full respiratory protection.

6) PERSONAL PROTECTIVE EQUIPMENT (PPE)

At all times the specific instructions supplied with the paint or coating regarding the use of PPE shall be adhered to. See part No. **19**– control of substances hazardous to health contained in this manual.
The level of respiratory protection supplied shall be acceptable to the type paint or finish being used, its method of application (hand or spray applied) and the ventilation in the place of application.
Safety goggles conforming to BS 2092.2 or an equivalent shall be worn for all spray-painting operations and when brush applying paints where the danger of splashing - exists. At all times, PPE selection is determined by the line

supervisor according to the operation individual tasks, and potential exposures.
Where the paint vapor contains eye irritants and ventilation is limited, a full face mask with positive pressure air shall be worn.
All painters shall wear long sleeved, long legged clothing and gloves to minimize the hazards of skin contact. Gloves shall be adequate for, and resistant to, the paint, coating or solvent being used.

7) FIRE PROTECTION

"NO SMOKING" and "flammable" safety signs shall be prominently displayed in all areas where they store, handle or use flammable paints, coatings and associated solvents.
All potential sources of ignition shall be kept – away from areas where flammable paints, coatings and their associated solvents are stored, handled or used.
Adequate ventilation shall be provided in all areas where paints, coatings and associated solvents are stored, handled or used, in order to prevent the build up of vapors to above the Lower Explosive Limit (LEL).
Dry powder fire extinguishers and foam fire extinguishers shall be readily available prior to operations where paints, coatings, and associated solvents are present.

8) STORAG

Specific stores for paints, coatings and their associated solvents shall be provided. Such stores shall be situated in a safe area, away from active areas, where hot work may take place where ever possible paint storage shall be located on a permanently supervised site and outside the battery limits of operational station and areas.
Stores shall be of a fire resistant construction and shall conform to the guidance of handling and storage as laid down in the following codes of practice :

a. NFPA 30
b. NFPA 303

The guidance detail the minimum standard of fire resistance required for purpose built stores which shall generally conform to 4 hours firs resistance. In addition, the guidance details the maximum permitted quantities of flammable and combustible liquids permitted in both purpose built stores and fireproof cabinets.
The store shall be ventilated and kept protected from the direct sun light or any other heat source to prevent a build up of temperature within the store.
Open containers of paint, or other substances shall not be stored in paint stores. Partially used containers of paint or thinners remaining unused at the end of the day shall be resealed, cleaned and returned to the store. Stored. Flammables and combustibles must be kept away from any ignition source at au times.
No more than one day's supply of paint shall be removed from the store to the workplace at any time. Any paint moved to the workplace and not in direct use shall be maintained in a fireproof locker, cupboard or bin.
Dispensing or decanting of material from one container to another shall not take place within the store but shall be in the open air away from hazardous areas of operation.

In the event of spillage, procedures shall be available to effect the clean up and prevent environmental hazards, resulting from such spill.

9) PAINTING BOOTHS

Dedicated painting booths shall be provided in facilities where painting is regularly performed. They shall be designed such that any vapor, mist or overspray is contained within the booth, and presents no hazard to persons working outside.
Painting booths shall be of fire – resistant construction, and subject to rigorous cleaning to prevent the build – up of solid paint residues.
These painting booths shall conform to the guidance laid down within NFPA-303 paint removal & painting and NFPA-33 spray Application using Flammable & combustible Materials.
Painting booths shall be supplied with adequate ventilation, both fresh air supply and contaminated air extraction, for the elimination of vapors in the air is maintained below their TLV (Threshold limit value).
Extraction fans shall be ducted to exhaust safely, away from ignition hazards, and occupied working areas. They shall be fitted with filters such that the exhaust poses no threat to personnel or the environment.
All paint spraying devices shall be electrically bonded to the item being sprayed.
All electrical fittings, lighting and appliances within the booth fittings, Lighting and appliances within the booth shall conform to the requirements in part No.19 Electrical safety contained in this Manual.

10) WORK PRACTICES

All personnel performing painting or coating work shall be trained for the work and be aware of the hazards of the particular materials being used.

Care shall be taken that painting activities at no time pose a threat to other persons in the area, who are not directly involved in the activity. Barriers and warning signs shall be provided around the painting.

Strict attention to cleanliness shall be observed in all painting and disposed of in accordance with part No.**19**– Control of substances hazardous to health contained in this manual.

Foodstuffs shall not be brought into or consumed on premises where paint is stored, handled or used. Neither shall utensils or receptacles that could be used for the storage or consumption of food or drink be permitted.

Solvents shall not be used for cleansing the skin. Special skin cleansers shall be provided together with skin creams to prevent excessive drying.

Records	Retention Time

Appendix

HSE-M1-P18

ELECTRICAL SAFETY

ELECTRICAL SAFETY

Department	Document Type	Document Title
HSE	ELECTRICAL SAFETY	ELECTRICAL SAFETY

Issue Approval	
Prepared By	**Approved By**
Bahaa Eddin Weld Ali *Sr.Safety Engineer*	Dr. Mohammad Al-Sulaity *Manager, HSE*
Signature:	**Signature:**

Issue Record

Issue No.	Date	Reason for re-issuing Procedure
0.0	14/10/2004	First issue of the Procedure.
1.0		
2.0		
3.0		
4.0		
5.0		

Table of Contents

Contents	Page
Title Page	1
Document Control & Issue Record Page	2
Table of Contents	3
Purpose	4
Scope	4
Responsibilities & Authorities	4
Abbreviations & Terminologies	5-6
A – GENERAL	7
1. ADMISSION TO generating, Switching & Sub-Stations	
2. Duties of Employees & Other	7
3. Issue of Rules	7
4. Variation of Rules	7
5. Definitions	7
B – OPERATING PROCEDURES	7-8
6. Switching	
7. Earthing	8
8. Loading Instructions to Generating Stations	8-9
9. Telephone & Radio Massages	9
10. Failure of supply	9
11. Dangerous occurrences & Accident	9
C-SAFETY RULES	9-10
12. General Safety Precautions	
13. Access to high-Voltage Enclosures & apparatus	11
14. Eathing	11-12
15. Permit – to – Work and sanction – for – Test	12-13-14
16. limitation-of-Access	14
17. Work in sub – Stations & switching stations containing exposed Live Conductors	15-16
18. Work on Remotely or Automatically Controlled Equipment	16
19. Work on High – Voltage Apparatus other that metal – Clad switchgear Spouts, Cables or Overhead lines	16-17
20. Work on metal – clad switchgear Spouts	17
21. Work on High – Voltage & Work on High – Voltage	18-19-20
22. Testing of High – Voltage Apparatus	20
23. Work on High – Voltage Equipment & Ancillary Apparatus Containing Sulphur Hexaflouride (SF 6) Containing	20
24. Work on High – Voltage Equipment Operated by or Containing Compressed Air	21
25. Work on Oil Tanks	21-22
26. Fire Protection equipment	22
27. Rules for work Medium & Low Voltage Apparatus, Conductors & Equipment	22-23-24
28. Low Voltage Installations	24-25

1. Purpose

The purpose of this part is to ensure the safety personnel engaged in the operation and \ or maintenance of Kahramaa electrical systems and apparatus.
They indicate the minimum safety precautions that shall be carried out at all time and are written to be applicable

2. Scope

The main key to preventing danger and injury from electricity is to employ competent persons. These persons shall have the technical know ledge and experience to understand the hazards, which may arise during the work and the precautions to be taken.
Care is necessary to ensure that the correct apparatus is used and that it is capable of operating safety under the worst and most hazardous conditions liable to be encountered

3) Responsibilities & Authorities

Through the implementation of the rules contained in this part, Line Management and Supervisor responsibility is to provide
a safe system of work.

4-Abbreviations & terminology

Additional Earths	an earth connection of approved type which is applied issue of a Permit – to – work or Sanction – for – test (for example an earth applied at the point of work).
High – Voltage Apparatus	any apparatus, equipment and conductors which are normally operated at a voltage exceeding 1000 volts .
Medium – Voltage Apparatus	any apparatus, equipment and conductors which are normally operated at a voltage exceeding 250 volt but not exceeding 1000 volts.
Low – Voltage Apparatus	any apparatus, equipment and conductors which are normally operated at a voltage not exceeding 250 volts.
Approved	sanctioned by the Director Electricity Network or by his authorized deputy.
Authorized Person	a competent person appointed in writing by the Director Electricity Network to carry out specific operations and work on the KAHRAMAA. 's system in accordance with his certificate of authorization.
Caution Notice	a portable notice in approved from attached to apparatus or its control equipment, conveying a warning against interference with the apparatus.
Certificate of Authorization	a certificate given to a competent person confirming that he has proved himself capable of carrying out the duties he is expected to perform, and defining the limits of his Authorization
Circuit Main Earth	an approved earth connection which is applied on the instruction of System Control Engineer before the issue of a Permit-to-Work or Sanction-for-Test.
Competent Person	a person over 21 years of age who has sufficient technical knowledge and experience to enable him to avoid danger.
Danger	a risk of loss of life, bodily injury, or damage to health from the attached to apparatus when live calling attention to the danger of approach to, or interference with, the apparatus.
Dead	at, or about, zero potential with respect to earth and disconnected from any live system.
Earthed	connected it the general mass of earth is such a way as to ensure an immediate discharge of electricity energy without danger.
Limitation of Access	a form, given and signed by an Authorized Person to a Competent Person in charge of work other than work on high voltage apparatus, defining the limits of the area within which the work is to be carried out.
Live	Electrically charged.
Permit-to-Work	a form of declaration signed and given by a Senior Authorized Person to a person in charge of work to be carried out in high-voltage apparatus, for the purpose of making known to that person exactly what apparatus is dead; isolated from all points of supply and feed back, and connected to earth, and on which it is safe to work. A Permit-to-Work may also be issued to a person in charge of work above ground level in proximity to live high-voltage apparatus.

Sanction-for-Test	a from of declaration signed and given by a Senior Authorized Person to a Senior Authorized Person in charge of testing of high-voltage apparatus for the purpose of making known to such person exactly what apparatus is to be tested and the conditions under which testing is to be carried out.
Senior Authorized Person	an authorized person whose letter of authorized permits such person to issue and cancel Permit-to-Work and Sanction-for-Test cads.
Switching	The operation of switchgear and isolators other methods of making or breaking a circuit.
System Control Engineer	An Engineer appointed by the KAHRAMAA., whose duties are to ensure maximum safety at all time, to personal and equipment on the KAHRAMAA.'s system and who is on duty for the purpose of controlling generation, transmission, and distribution of electricity within the State.
Working Party	person working under the immediate supervision of a Competent Person or Authorized Person.

A-General

1. Admission to generating switching station and sub-station

No person shall enter any generating, switching or sub-station wholly or partly occupied by the **KAHRAMAA**, without the authority of a responsible official of the **KAHRAMAA.**

2. Duties Of Employees & Others

The rules must be familiar to all employees who may be concerned with **KAHRAMAA's** high-voltage equipment and must and must be strictly observed. Employees of contractors and others having occasion to operate or work on the **KAHRAMAA's** equipment, are also required to be familiar with these rules, and to observe them.

3. Issue of Rules

(a) A copy of these rules shall be supplied to all persons concerned with the control, operation or maintenance of the **KAHRAMAA's** high-voltage equipment and each recipient shall sing a receipt for his copy which shall be keep in good condition
(b) A copy of the rules shall be kept available for reference at all grid and primary sub-station at which **KAHRAMAA's** equipment is installed

4. Vriation of Rules

In exceptional circumstances these rules may be varied to such extent as may be authorized in writing g by the **KAHRAMAA's** Director Electricity Networks Dept. or on his behalf by an Engineer authorized by him in writing to do so.

5. Definitions

Refer to the ABBREVIATIONS & TERMINOLOGIES.

B- OPERATIN PROCEDURES

6. Switching

6.1 operation of Circuit Breaker and Insulators

a) No high-voltage switching or associated operations shell be carried out without the sanction of the system control engineer, except in cases of immediate danger or person or apparatus.
b) When the system control engineer requires high-voltage switching to be carried out, he shall communicate directly with the authorized person who is to carry out the switching. In the absence or failure of direct communication facilities the message may be relayed by a competent third party, Rule 9 being observed.
c) Switching or operations to system Control Engineer's instruction, or with his consent, shall be carried out without undue delay, and all switching operations, whether to the system Control Engineer's instruction, or with his consent or with his consent, or when there is immediate danger to life or equipment, shall be reported to the system control engineer as soon as possible after each operation. The circumstances of an occurrence necessitating any emergence switching shall be reported at the same time.

d) Should any equipment show signs of distress or faulty operation, the circumstances shall be reported immediately to the system control engineer and the equipment shall be examined before further operation.
e) When any person received instructions regarding work on, or the operation of, high-voltage apparatus, he shall report any object to the carrying out of the instructions to the system control engineer who shall than have the matter in investigated and, if necessary referred to higher authority.

6.2 Recording of Switching.

A records of all high-voltage switching and relay operations shall be entered in the appropriate station or substation log. The system control engineer shall record in his log the time and particulars of all high-voltage switching and relay operations carried out to his instructions or with his consent.

7. Earthing.

7 .1 Circuit Main Earths.

No high-voltage earthing switch shall be operated or circuit main earth connection attached or moved expect on the instruction of, or with the consent of, the system control engineer, and then only by a senior Authorized Person or competent person acting under his immediate supervision. Each operation shall be reported to system control engineer as soon as possible after completion, and where applicable the location of each connection to earth shall be recorded on the Permit-to-work or sanction-for test card.

7.2 Recording of Earthing.

The system control engineer shall record in his log book the time of application and the location of all Circuit Main Earth connections and the tome of their remove.

8. loading Instructions to Generating Stations

8.1 Load Allocation.

a) The allocation of load to the KAHRAMAA's generating stations is the responsibility of the system control engineer, and will be varied by him from time to time as required by system conditions.
b) The out put of any privately owned generating plant in connection with whose operation the KAHRAMAA. has entered into an garmented will also be supervised by the system control engineer to extent required by the relevant agreement.
c) Any person receiving instruction from the system control engineer regarding station loading voltage adjustment, frequency control and associated matters shall carry out the instructions without undue delay and where necessary shall report the system control engineer
d) Where there is any object to, or difficulty in carrying out the system control engineer's instructions, he shall be notified of the circumstances and will then investigate the matter, referring if necessary to higher authority

8.2 Recording of Loading Instructions

The system control engineer shall record in his log the time and nature of all loading and associated instructions issued by him, and may add such explanatory notes as he deems to be necessary or useful.

9. Telephone & Radio Messages

Every telephone or radio message relating to operation of the high-voltage system shall be writing down by its sender and receiver without alteration or abbreviation (other than those approved), together with a record of the receiver to the sender exactly as written to ensure that it has been accurately received and understood.

10. failure of supply

A failure of supply, from whatever cause, to or from any part of the KAHRAMAA.'s high-voltage system shall be immediately report to the system control engineer
During failure of supply all apparatus, equipment and conductors of the circuit(s) affected shall be treated as being alive.

10. **Dangerous Occurrences and Accidents**

All dangerous occurrences and accident on the KAHRAMAA.'s high-voltage system shall be reported immediately to the system control engineer who shall immediately pass on the relevant information to the Director, electricity network dep. Or his deputy, confirming in writing as soon as possible.

C. Safety Rules

12. General Safety precautions.

12.1 work on High-voltage apparatus

No person shall carry out work of any description(including maintenance, repairs, cleaning and testing) on any part of high-voltage apparatus unless this part of the apparatus is:

a) Dead ;
b) Isolated, and all practicable steps have been take to lock off live conductors;
c) Efficiently connected to earth at all points of disconnection of supply to the apparatus or between such point(s) of work. these earth should be applied in an approved manner.
d) Screened where necessary to prevent danger and caution and danger notices fixed.
e) Released for work by the issued of a Permit-to-work or sanction-to-test and unless such person.
f) Is fully conversant with the nature and extent of the work to be done.

It is the duty of the person issuing the Permit-to-work or sanction- to-test to satisfy himself that the foregoing provisions are complied with.

Provide that, if the clearances specified in Rule 17 (1) are maintained, work may be carried out on structures above ground level under section 'A' of a Permit-to-work, or at ground level under a Limitation-of-access and the provisions of Rule

12 (1) (a), (b) and (c) need not apply. Making live or dead by signal or per-arranged understanding after an agreed interval of time is forbidden.

12.2 Interference with Conductors

Not person shall touch the insulation which covers or supports any conductor subject to high-voltage unless the conductor is dead, isolated and earthed.

12.3 Fixing of Notices & Screens.

Work shall not be carried out on any high-voltage apparatus which has been made dead and earthing until caution notices have been attached at all points where such apparatus can be made live. Danger notices shall also be attached to or placed adjacent to the live apparatus and at the limits of the zone in which work may be carried out. Caution notice, danger notices, barriers and screens shall be fixed and moved only by or under supervision of an Authorized Person.

12.4 Safety Locks (Distribution)

a)Safety locks preferably differing from standard locks of the system, shall be used to lock off all switches at points where the circuit on which work is to be energized. The keys for such locks shall be kept in a key safe, if provided, or in some other safe place preferably in the possession of the Senior Authorized person in charge of the work

b)When the circuit on which work is to carried out is controlled only by fuses and links, the fuses, links and carries shall be removed and kept in the custody of the Senior Authorized person responsible for issuing the permit-to-work or in some safe place.

12.5 Danger Envelopes.

Danger envelops will be provide for reception of keys which secure switches, barriers, spout shutters, lock-out equipment or other similar devices provide for the protection of men working under a permit-to-work or Section-for-test. The Danger envelope will be locked in a key cabinet, if available, until it is again required to restore the circuit to normal service.

12.6 Work on Towers & High Structures.

All person while at work on towers, poles and high structures shall make proper use of their safety belts and no man shall work alone on any tower or high structures.

13.Access to High-Voltage Enclosures & Apparatus

13.1 Enclosures Containing High-Voltage Apparatus.

Barriers in generating stations or substations (including plates on access ladders) cutting off access to enclosures within a station, chambers, cubicles or cells containing live high-voltage apparatus shall normally be kept locked. The keys

controlling the locks shall be kept in a box or cupboard, and shall be removed only by an Authorized person for the purpose of obtaining access to the high-voltage apparatus. No person except an Authorized person, or person acting under his immediate supervision, shall have access to any enclosure, chamber, cubicle or cell in which a live conductor is exposed.

a) Underground Chambers.

Smoking is strictly profited in all underground chambers except where it is specifically permitted. No person shall enter, and exposed flames are prohibited in, any such chamber unless adequate precautions have been taken (e.g., use of suitable natural or forced ventilation) and the consent of an Authorized person obtained. Where dangerous fumes are liable to be present these precautions shall include testing for gas by means of an approved detector. Where one or more person are required to work in an underground chamber where dangerous fumes are liable to be present, an extra person shall keep in duty outside the chamber and such person shall keep in touch with the work or workers inside the chamber. If necessary by an Authorized person approved Breathing Apparatus shall be worn and a rescue line attached to a person entering a confined space.

b) Towers & Gantries.

Gates and devices to prevent climbing of towers and gantries shall always be kept locked expect when opened under the instruction of an Authorized person..

14. Earthing

14.1 Equipment for earthing

when high-voltage apparatus is to be discharged and earthing, it shall be done:

a) by the use of earthing switches or special apparatus where provided, or,

b) where not provided means. When a circuit breaker is used to make the earth connection, than the tripping feather shall be rendered in operative before closing, and if practicable the mechanisms shall be of an approved type and of adequate current carrying capacity.
Earthing devices shall be examined for at least quarterly and always immediately prior use. By an Authorized person.

14.2 Procedure for The Use Portable earthing Devices.

a) Earthing devices shall be connected to the earth system before being secured to the phases. The earthing connection shall only be secured to the phases by means of an earthing pole or other approved apparatus and care must be taken to ensure that good connection is made.
b) Earthing devices shall not be applied in any cell or compartment in which there is danger of accidental contact of the devices with exposed metal, live at high-voltage.
c) When removing earthing devices they shall be disconnected from the phases first by means of an earthing pole or other approved apparatus, and the earth system last.

14.3 Earthing Metal-Clad Switchgear.

For the purpose of earthing metal-clad switchgear approved appliances only shall be used. The instruction of the hand or any tool into the contact spots for this purpose is forbidden.

Before work is carried out on the with draw able portion of truck or mea;-clad switchgear, the provisions of Rule 12(1) (a) and (b) shall first be complied with. The apparatus shall then be:-

a) Checked by means of an approved voltage indicator, the indicator itself being tested immediately before and after the verification.
b) Discharged to earth ; and
c) Efficiently connected to earth (such earth to remain connected unless the apparatus is bodily removed from its normal live position and is disconnected from all possible sources of supply).

15. Permits-to-work & Sanctions-for-test.

Purpose

the purpose of the Permit to work system is to ensure that a safe working environment is achieved by providing management control over the various activities which may have hazardous interactions the system provides a formal and controlled process that identifies and communicates risks and hazards associated with planned activity , and ensures that appropriate precautions and measures are implemented so that the job can proceed and be completed safely .It is important to note that a permit to work is not a permission to carry out a hazardous job , but is an essential on how to carry out a hazardous job safely and in a managed and controlled way.
The procedure has three key features:

- It allows those responsible for overall site safety to be aware of the various hazardous activates and to take a systematic overview privities to be set for conflicting work tasks.
- It limits the potentially harmful effect of the actions of the person doing the work by specifying safety precautions and setting limits to the duration and extent of the work.
- It encourages formal and careful attention to safe systems of working by requiring the signature of specified individuals who must confirm that all hazardous have been identified and effective precautions taken.

Inevitably, the permit to work system will not meet every work situation precisely , and special regulations may have to be issued to deal with exceptional cases.

SAFETY STANDARDS

The permit to work procedure contains the safety standards acceptable to Kahramaa. The standards may be increased at the discretion of the Area Authority or issuing Authority of necessary, but not decreased.
Deviation from the rules and regulations in the permit to work procedure may be necessary in an emergency, but the safety of personnel, the environment and property must not
be jeopardized. Once the emergency is contained, the rules and regulations in the PTW procedure must be re-applied.

All persons involved in the permit to work process understand that it is not the work permit itself that ensures that work is carried out safely but the control over the work and the precautions taken. Other necessary elements, as follows, contribute to safe working :

- Good communications between all involved personnel
- Detailed planning for work
- Systematic identification and communication of hazards and risks
- Effective implementation of required precautions and close supervision of the work.
- A skilled, trained and dedicated workforce.
- Regular auditing of the permit system.

15.1 Arrangements for Issue.

a) A permits-to-work and Sanctions-for-test shall be issued only with the consent of the system control Engineer, who shall retain in his custody a copy of each transmission permits-to-work and Sanctions-for-test issued. In the case of a distribution permits-to-work or Sanctions-for-test he shall retain record of their issue.
b) Work shall not be carried out by any person on high-voltage apparatus or proximity to any such apparatus where technical knowledge or experience is required to avoid danger until a permits-to-work or Sanctions-for-test has been signed and the card copy handed by a senior Authorized person to the person in charge of the work. the senior Authorized person shall ensure that the person receiving the permits-to-work or Sanctions-for-test fully understands its contents. The person in charge of the work shall then sign the card copy and its original and retain the card copy in his possession until he has signed the clearance and returned it to the senior Authorized.
c) The person in charge to whom a permits-to-work is issued shall be a competent person and the work shall be carried out under his immediate supervision. In the case of an overhead line with all conductors dead, immediate supervision shall be deemed to include the area between additional earth as defined in rule 21(2) (b).
d) No person holding a permits-to-work or Sanctions-for-test may leave the site of the work while work is in progress.
e) A permits-to-work shall be issued to the person in charge of each independent working party.
f) Only one Sanctions-for-test may be issued on high-voltage apparatus at any one time and under on circumstances may a permits-to-work be in force on any high-voltage apparatus within the points of isolation specified on a Sanctions-for-test.

15.2 precautions during progress of work.

a) the apparatus isolated and earthed for work under the terms of a permits-to-work must remain so until the permits-to-work is cancelled.
b) Should work for which a permits-to-work or Sanctions-for-test has been issued be such that the apparatus may be put into commission before its completion, then each time the work is suspended the permits-to-work or Sanctions-for-test shall be cancelled.
c) Apparatus isolated and earthed for testing, and in connection with which the system control engineer has given to the senior Authorized person a

Sanctions-for-test and approval for the operation of switches, isolators, earthing switches and earth connections for test purposes within the isolated sections, comes under temporary control of the Senior Authorized Person.

He may, without further reference to the system control Engineer, operate it in accordance with these Rule.
He may remove the earth and make it live from a testing supply. He will be responsible for co-coordinating all such operations on the isolated equipment and for ensuring safety during teats.

15.3 procedure for clearance and cancellation after issue.

After work for which a permits-to-work been issued has been completed (or suspended by a senior Authorized Person), the person in charge of the work shall sign the clearance. He shall then immediately return the card to a Senior Authorized Person who shall then obtain the consent of the system control engineer and cancel the permit-to-work.
After work, for which a Sanctions-for-test has been issued, has been completed, the senior Authorized Person shall sign the clearance with the exceptions noted and shall then obtain the consent of the system control engineer to cancel the Sanctions-for-test.

16. Limitation-of-Access.

16.1 Arrangement for issue.

a) Limitation-of-access will be issued by an Authorized Person without reference to the system control engineer.
b) A limitation-of-access will be issued to a contractor's representative who is in charge of work in high-voltage compound, the work being such as will not require the issue of a permit-to-work under Rule 15 (1) (b). the Limitation-of-access will be sign by an Authorized Person and the card copy hand to the person in charge of the work. the Authorized Person issuing the Limitation-of-access shall ensure that the person in charge of the work fully understands its contents. The person in change of the work will then sign the card copy and its original and retain the clearance and returned it to the Authorized Person.
c) The person in charge to whom the Limitation-of-access is issued shall be a competent person and the work shall be carried out under his immediate supervision.
d) No person holding a Limitation-of-access may leave the site of the work while work is in progress.
e) A Limitation-of-access shall be issued to a person in charge of each independent working party.

16.2 procedure for clearance and cancellation.

After work for which a Limitation-of-access has been issued has been completed (or suspended by an Authorized Person) the person in charge of the work shall sign the clearance. He shall then immediately return the card to an Authorized person who will cancel the Limitation-of-work.

17. Work in Sub-Station & Switching stations Containing Exposed Live Conductors.

17.1 Safety Clearances to Live Conductors.

When work is to be carried out in a sub-station in which there are exposed live high-voltage conductors, then, unless the whole equipment is dead, the section which is to be made dead for work to be carried out shall be defined as far possible by the use of barriers, notices, or roping arranged so that the minimum clearance form the nearest exposed live conductor to ground level or to any platform or access way which may be required to used shall be:

Rated Voltage	Clearance
Not exceeding 6.6K V but	2.57 M (8ft 5in.)
Exceeding 6.6KV but not Exceeding 11KV.....	2.59 M (8ft 6in)
Exceeding 11KV but not Exceeding 33KV.....	2.74 M (9ft 0in)
Exceeding 33KV butt not Exceeding 66KV.....	2.94 M (9ft 9in)
Exceeding 66KV but not Exceeding 132KV....	3.43 M (11ft 3in)
Exceeding 132KV but not Exceeding 275KV.....	3.57 M (15ft 0in)

The area to be defined at ground level shall only be that in which work is to be carried out.
If the work is such that these clearances are not sufficient to avoid danger, other suitable arrangements shall be made to provide the requisite degree of safety.

17. 2 Use of ladders & Long Objects.

a) Ladders shall be of an approved type and of no greater length than is required for the work involved.
b) Ladders and other objects shall not be used without the permission of a senior Authorized person. The movement and erection of such ladders and objects shall be carried out only under the direct supervision of the competent person in charge of the work and when moved at ground level they shall be carried only in the horizontal position and as near ground as practicable.
c) All portable ladders within sub-stations or switching when not in use shall be securely locked to a suitable anchorage.

18. Work on Remotely or Automatically Controlled Equipment.

17.2 Before work is carried out on remotely or automatically controlled equipment such as circuit breakers, isolators, tap changing gear, or air compressors, the automatic or remote control feather shall first be rendered inoperative.

17.3 Before any work is commenced on protection, control, or indication circuits the system control engineer must be informed and precautions taken to prevent any mal-operation.

19. Work on High-Voltage Apparatus Other Than Metal-Clad Switchgear Spouts, Cable or Overhead Lines.

Before any person is allowed to carry out any work on, or repairs or modifications to, or cleaning of, any high-voltage apparatus other than metal-clad switchgear spouts, cables, and overhead lines, the following operations shall be carried out in strict sequence.

a) The apparatus shall be made deal.
b) The apparatus shall be isolated from all points of supply, including voltage and auxiliary transformers and common neutral earthing equipment from which the apparatus may become alive.
c) Caution notices shall be attached at all points where the apparatus can be made live.
d) The apparatus shall then be:

i Checked to ensure that it is not live, where practicable, by means of an approved voltage indicator the indictor itself bring tested immediately before and after the verification.
ii Efficiently connected earth at all points of isolation from the supply, including points of isolation from the common neutral earthing equipment where applicable, or between such points and the points of work.

e) Circuit breakers, isolators, spout shutters, control handles and safety devices, shall be locked in position by the keys provided for the propose which shall then be placed in a Danger envelope.
f) TRANDMIDDION ONLY
If work is such that operations (a) to (e) have to be carried out at more than one station the Authorized Person at each stations shall place the keys involved in a Danger envelope and lock the envelope in a key cabinet until he receives instructions from the system control Engineer to restore the equipment to normal service.
g) A permit-to-work or sanction-for-test shall then be issued.
h) Unless the circuit main earths through which the apparatus is connected to earth are close to and visible from the point of work, the apparatus shall be efficiently connected to the earth by means of additional earth at the point of work. the application of additional earths is not required where these earths coincide with the circuit main earth.
i) Earthing may be removed under the terms of a Sanction-for-test after which they shall be immediately replaced or noted under the "exceptions" when clearing the Sanction-for-test.

20. Work on metal-Clad Switchgear Spouts.

20.1 Bus-Bar Spouts & Bus-Bar Voltage Transformer Spouts.

When work is carried out on bus-bar spouts, the following operations shall be carried out in strict sequence:

a) The section for bus-bar on which work is to be carried out shall be made dead and shall be isolated from all points of supply.
b) The isolated arrangements shall be locked so that they cannot be operated and the shutters of live spouts locked shut.
c) Where practicable the bus-bars shall be checked by means of an approved voltage indicator to verify that they are not live, the indicator itself being tested immediately before and after the verification. The checked with the voltage indicator shall be done on the plane to be earthed with the circuit main earths and also on the panel on which work is to be carried out.
d) Caution notice shall be attached at all points where the apparatus can be made live and Danger notices attached to all adjacent live apparatus.
e) The bus-bars shall be earthed with approved earthing equipment at a panel other than that at which work is to be carried out, on the isolated section of bus-bars. For the purpose of earthing metal-clad switchgear approved appliances only shall be used. The insertion of the hand or any tool into the bus-bars and feeder spouts for this purpose is forbidden.
f) The operations set out in Rule 19 (e), (f) and (g) shall be carried out
g) Work on spouts shall then be done under the personal supervision of a Senior Authorized person, who notwithstanding the requirements of Rule 12 (1) and Rule 15 (2) (a) shall remove the earths at the point of work and prove each spout dead by means of an approved voltage indicator, before it is worked on, the indicator itself being tested immediately before and after the verification. If the earth that can be spouts and are circuit main earths, then while work is in progress on other work shall be carried out on the circuit connected to those spouts. In all other case the requirements of Rule 12 shall apply.
h) When the spouts are connected to an overhead line on which there is any likelihood of dangerous induced voltage, additional earths shall be efficiently connected at the nearest point to the point of work where access to the conductors can safety be obtained.
i) Earths may be removed the under the terms of a Sanction-for-test after which they shall be immediately replaced or noted under the "exceptions" when clearing the Sanction-for-test.

21. Work on High-Voltage Cable & Overhead Lines.

21.1 High-Voltage Cable

The provisions of Rule 19 shall apply to work on high-voltage cable and in addition the following precautions shall be taken:

a) No person, after receiving a Permit-to-Work or Sanction-for-test shall work on, or in any way interfere with, any high-voltage cable until personally instructed at the point of work by a Senior Authorized Person.

b) When any high-voltage cable is in be cut or joint opened a Senior Authorized Person shall satisfy himself that the cable has been made dead and identified before allowing work to proceed.
c) When work is to be carried out on cable circuits in proximity to other live circuits and on cable circuits with fully insulated metallic sheaths, special precautions should be taken to avoid danger from induced voltage. Where special conditions exist the work shall be carried out in accordance with the KAHRAMAA code of practice

21.2 Overhead lines with all conductors dead

The provisions Rule 19 shall apply to work on high-voltage overhead lines and in addition the following precautions shall be taken:

a) All person while working on towers, poles and high structures shall make proper use of their safety belts and shall be in visual range of a second person. Before any pole is climbed it shall be sounded. No pole badly impaired by decay or damage shall be climbed until it has been securely guyed and if necessary splinted, and then only by on person.
b) At each station involved at Authorized Person shall personally check the identity if the circuit at the point of isolation and report the system control engineer.
c) TRANSMISSION ONLY. Each person who may have to climb a tower shall be provided with a wristlet marked with the circuit designation of the line on which work is to be carried out and shall wear it in such a manner that wearer. The person who will be in charge at each tower shall be provided with a green flag and shall place the green flag in a suitable position before allowing any man to ascend the tower.
d) The conductors shall be efficiently connected to earth by the earthing party at the poin (s) of work or at the adjacent tower in each said of the point (s) of work but in on case shall earths be more than two spans apart. In addition, if conductors are to be broken they shall be connected to earth at each said of, and on the same tower as the point of work where the break is to made. These earths shall be applied before the beak is made and shall remain in position until the conductors are reconnected or until work is complete.

21.3 Double Circuit Overhead Lines with one Circuit Live:

Where work similar to that covered by 21 (2) has to be carried out on double circuit overhead lines with one of the circuits live, the provisions of Rule 21 (2) shall apply, and the following additional precautions shall be taken:

a) After placing in position the green flag, which shall fit the socket on the dead side of the tower, and before any other person is allowed access to the tower, the earthing party under the supervision of the Competent Person at the point of work shall climb tower on the dead side, and shall efficiently connect to earth each individual conductor on the side. They shall then affix red pennants to the cross arms supporting the live conductors at the tower body. The conductors shall remain in position, throughout the progress of the work, and the earth and pennants shall be removed by the Earthing Party only after have descended the tower

on completion of the work. while affixing or removing the earths and red pennants, the Earthing Party shall under observation by another person at ground level.

b) Work on a tee-off tower shall only be carried out in the presence of a Senior Authorized Person, and special cars shall be taken at terminal and angle towers.

21.4 Towers Carrying Live Conductors.

Work above the anti-climbing devices on towers carrying live conductors shall be permitted only under the following conditions:

a) The work shall be carried out under the terms of a Permit-of-work and from within the body of the tower.
b) Before anyone is allowed to start work, the Component Person in charge at each tower shall define the are to be worked in by removable barriers, notice boards, roping or pennants arranged to less than following distances from any live conductors:

Rated Voltage	Clearances
Up to 33Kv..	2.74 m (9 ft 0 in.)
Exceeding 33k V but not exceeding 66k V	2.97 m (9 ft 9 in.)
Exceeding 66k V but not exceeding 132k V	3.43 m (11 ft 3in)
Exceeding 132k V but not exceeding 275k V	3.35 m (15ft 0in)

While defining the working area the Competent Person in charge shall observation by another person at ground level.

c) No man shall work in such a manner that his arms or any toll extend beyond the limits defined in subparagraph (b), and no tool greater in length than 0.3 meters (12 inches) shall be taken up a tower.
d) Upon completion or cessation of the work the Competent Person in charge shall inform all members of the working party that it is no longer safe to work upon the tower and shall remove the barriers, notice boards, roping or pennants defining the working areas. While removing the all barriers etc. the Competent Person shall be under observation by another person at ground level.

21.5 Adverse Weather Conditions.

a) In the event of a near approach of a lightning storm all work on overhead lines shall case immediately and the System Control Engineer informed.
b) No person alone shall patrol an overhead line across country when visibility is dangerously impaired for any reason.
c) If overhead lines are to be patrolled during the hours of darkness suatble lighting equipment shall be provided.

22. Testing of high-Voltage Apparatus.

a) When any high-voltage apparatus is to be subject to voltage before being connected to the high-voltage system the Senior Authorized Person responsible for applying the test voltage shall ensure that such apparatus is adequately guarded to prevent danger and that Danger notice are attached in conspicuous positions during the period the apparatus may be subject to voltage. All cable shall be discharged before and after the application of the test voltage .
b) Temporary conductors used for testing purposes shall be of adequate size and easily visible.
c) Test connections shall not be applied in a cell or compartment in which there is any exposed metal live at high-voltage. (This rule dose not exclude the use of approved voltage indicators or approved devices for phasing out circuits).

23. Work on High-Voltage Equipment & Ancillary Apparatus Containing Sulphur Hexaflouride (SF6) Gas.

a) For any equipment containing sulphur hexaflouirde gas the KAHRAMAA code of practice must be available at the point of work stating the method dealing with the gas and associated compounds. The apparatus shall bear an approved notice stating that it contains sulphur hexaflouride.
b) In addition to the requirements of Rule 19 and rule 24 the following special precautions shall be taken when any work involves access to any part of the equipment which is, or has been in contact with the gas associated compounds.

i. The apparatus shall be isolated from all sources of the supply of gas purged in accordance with the KAHRAMAA code of practice and the associated receiver(s) and pipe work left open to atmosphere.
ii. The vales shall be locked by safety locked and the keys shall be placed in the appropriate Danger envelop.
iii. Caution notices shall be attached to the valves
iv. The work shall be carried out under a Permit-to-work.

c) Approved protective clothing, respirators, eye shields and safe handling equipment shall be provides and used where danger may arise from the gas or associated compounds in accordance with the KAHRAMAA code of practice.

24. Work on High-Voltage Equipment Operated By or Containing Compressed Air.

24.1 Work Other Than Maintenance Testing or Operational Testing & Adjustments.

Work other than maintenance testing or operational testing and adjustments on high-voltage equipment operated by or containing compressed air shall be carried out only under the following conditions:

a) High-Voltage Apparatus after having been isolated

shall be earthed buy an Authorsied Person in accordance with the provisions of Rule 19

b) i. The valves controlling the supply of air to the equipment shall be closed and the air released from the associated receivers and pipe work which shall be left open to the atmosphere;
   ii. The valves shall be locked in position and the keys retained by the Senior Authorized Person, and Caution notice applied.
   iii. A Permit-to-Work or a Sanction-for-Test shall be issued to the person in charge of the work.

24.2 maintenance Testing.

maintenance testing on high-voltage equipment operated by, or containing compressed air shall only be carried out (a) under the terms of a Sanction-for-test, or (b) under the direct supervision of a Senior Authorized Person under the terms of a Permit-to-Work. The provisions Rule 24 (1) shall apply before the Sanction-for-Test or Permit-to-Work is issued. The Permit-to-Work may be the one issued to a Competent Person under the terms of Rule 24 (1), but under no circumstances will there be more than one Permit-to-Work issued on the high-voltage equipment. The Senior Authorized Person shall ascertain from the System Control Engineer that on other Permit-to-Work has been issued on the apparatus other Permit-to-Work under which the maintenance testing is be carried out.

24.3 Operational Testing & Adjustments.

Operational testing and adjustment on equipment in service operated by containing compressed air, may be carried out under the direct supervision of a Senior Authorized Person, in which case the provisions specified under Rule 12 (1) shall apply.

25. Work in Oil Tanks

a) No person shall enter a vessel which has been emptied of oil or any other inflammable substance until a Senior Authorized Person is satisfied that all dangerous vapors have been expelled.
b) Smoking and exposed flames are prohibited in the vicinity of open vessels containing or which have contained oil ore any other inflammable substance until the precautions specified in (c) have been taken.
c) Work on such vessel involving the application of heat is forbidden until all practicable steps have been taken to prevent fire or explosion either by the removal of the inflammable substance and any fumes or by rendering them non-explosive and noninflammable

26. Fire Protection Equipment.

26.1 Automatic Control

a) Before work or inspections are carried out in any enclosure protected by automatic fire extinguishing equipment the automatic control shall be rendered inoperative and the equipment left on hand control and a notice to his effect shall be attached.

b) The automatic control shall be restored immediately after the person engaged on the work or inspections have withdrawn from the protected enclosure.
c) The rendering inoperative of the automatic control and the placing of Caution notice shall be noted on any Permit-to-Work issued for the work in the protected.

26.2 General

Contact with some chemicals used in fire protection equipment may be dangerous, and in such case notices to that effect shall be displayed adjacent to the equipment. Portable fire fighting equipment shall not be used on electrical apparatus has been disconnected from supply.
Portable CO_2 , dry chemical powder extinguishers may be used in the vicinity of live electrical apparatus provided that in the handling of the extinguishers the safety clearances specified in Rule 17 (1) are maintained. After the discharge of portable CO_2 or dry chemical powder extinguishers in a confined space, the operator shall level the space until the precautions set out in (d) have been taken.
After any fire, or after the discharge of CO_2 or dry chemical powder extinguishers in an enclosed space, the space shall be thoroughly ventilated before entry or suitable berating apparatus shall be worn if entry is necessary before the gases have been cleared.
Automatic fire protection and alarm systems (i.e. FM-200, Foam, water spry systems) shall be provided in all new and existing sub-stations.For additional details, refer to Part 6 (Fire Safety Philosophy).

27. Rule for work on medium & Low Voltage Apparatus, Conductors & Equipment.

27.1 Precautions to be Taken Before Working on Medium & Low Voltage Systems.

The consequents of shock or serious burans from short circuit associated with medium and low voltage system may be serious or, in some circumstances consumers, fatal. Whenever practicable, conductors and equipment shall be done while they are dead.

a) Apparatus must always be made dead whenever this dose not materially inconveniences consumers. the connecting of services either overhead or underground does not normally necessitate making the distribute dead to work on.
b) When working dead medium and low voltage apparatus suitable precautions shall be taken by screening or other means to avoid danger from inadvertent contact with live conductors within the working zone.
c) Caution notices shall be securely fixed on all switchgear controlling the apparatus which has been made dead and on which work is proceeding. Danger notice shall work be attached (where applicable) on or adjacent to live apparatus and at the limits of the zone on which work may be carried out.
d) It is not always possible to make dead or earth Medium and low Voltage Apparatus. All work on medium and low voltage apparatus must be carried out as if it wee live unless it is proved dead.

e) When working on live medium or low voltage apparatus suitable precautions shall be taken by screening or other means to avoid danger from inadvertent contact with live conductors or earthed metalwork.
f) Work on live Medium or low Voltage apparatus, conductors or equipment shall be undertaken only by a Comp tenet Person

27.2 Work on Medium or Low Voltage Cable.

a) Difficulties are sometimes experienced in the identifications of underground cables. The armoring may not be a safe guide in distinguishing between high and low voltage. Where more than one cable exists on a route it shall be the responsibility of the Engineer in charge of the worked to positively identify the cable to be worked upon. In the case of any uncertainty the cables shall be made dead.
b) When work is to be carried out on dead medium voltage cable, it shall be from all points of supply and caution notices affixed. All practicable steps shall be taken to prevent the cable being made live inadvertently, including locking off of any switchgear and the removal of any fuses or links. Keys, fuses or links shall be kept in a safe place. The circuit shall be proved dead by means of an approved indictor, the indicator itself being tested immediately before and after the verification.
c) Where is to be carried out on live cable only one conductor should be bared at a time and rubber gloves or a rubber mat shall be used in addition to any rubber with insulating material and the metallic sheath shall be bonded across with an approved insulated conductor before cutting to ensure the continuity of the electrical circuit through the sheath. No man shall work on a live cable unaccompanied
d) When work is to carried out on auxiliary cables, which may be subjected to induced voltage from adjacent High-Voltage circuits, additional precautions to prevent danger from these voltage shall be taken in accordance with the special issued by the Director Electricity Network Dep. KAHRAMAA.

27.3 Work Medium & Low Voltage Overhead Lines

a. GENERAL

All person while at work on towers, poles and high structures shall make proper use of their safety belts and shall be in visual range of a second person. Before any pole is climbed it shall be sounded. No pole badly impaired by decay or damage shall be climbed until it has been securely guyed and if necessary splinted, and then only by one person.

b. ADVERSE WESTHER CONDITIONS

i) In the event of a near approach of a lightning storm all work on overhead line shall case immediately.
ii) No person alone shall patrol an overhead line across country when visibility is dangerously impaired for any reason.
iii) If overhead lines are to be patrolled during the hours of darkness suitable lighting equipment shall provided.

c. WORK ON MEDIUM OR LOW VOLTAGE OVERHEAD LINES

Before work is commenced on bare medium or low voltage overhead lines which have been made dead, the conductors including the neutral shall be short circuited and where practicable earthed.
If the Competent Person in charge, together with the working party leaves the line at any time, so that the part pf the lines on which work progress is out of sight of such person shall verify that the local earths are in position before work is restarted on the line.
Where work on live medium or low voltage overhead lines is carried out with the approval of the director Electricity Network Dep. KAHRAMAA. the following precautions in addition to those of Rule (27) shall be observed .
Work on a live overhead line shall be carried out by a Competent person and rubber gloves shall be worn
In addition he shall make proper use of his safety belt when working and a second person must be in attendance near the pole on which the Competent Person is working.
The removal or replacing of fuses or links mounted on poles may be carried out by a Competent Person unattended.

28-Low Voltage installations

28.1 Electrical Installations Standards / Codes

The following relevant regulations and codes shall be adhered to by the CONTRACTOR in addition to the requirements as set out in these rules:

- I.E.E regulations for electrical installations
- Electrical safety code issued by the Institute of Petroleum

28.2 Workshops & Stores

Cable installations shall be so arranged as to prevent the need for long trailing cables. Socket outlets shall be located as near the working point as possible.
The electrical circuits of cable installations are to be completely enclosed in earthed metal, so that any damage to the installations shall cause a direct fault to earth, resulting in the circuit fuse blowing or an alarm sounding. Cable installations in workshops &stores shall be of the following types;

- Cable encased in steel conduit \ trunking
- Mineral insulated, copper clad cable(MICC)
- Steel wired armored cable.
- Cable trays (pvc, Galvanized, etc) will be applied when ever multi cables run will be installed.

The principle of enclosing circuits in earthed metal shall be used for fittings which are metal clad. Light fittings shall have earthed wire guards fitted.

28.3 Offices and Domestic Buildings

Plastic conduits or surfaced- run cable and insulated fittings shall be permitted i.e. the cable installation need not be metal –clad.
Extension cords shall not be used on any permanently installed office equipment. Where used for temporary installations, extension cords shall be fitted an independent earth conductors, a male plug on one end a female socket on the other.

The routing of extension cords shall be in accordance with workplace activities, and kept away from any areas where the cord could be at risk, of cause a hazard to personnel.
Leads shall be of an adequate length , and routed such that they do not represent a trip hazard to occupants of the office .
Electrically powered equipment shall be switched off and disconnected from the electrical supply prior to any cleaning of adjustment by non- specialized personnel.
All faults such as cracked plugs, frayed or damage leads or faulty wall sockets shall be reported immediately and the equipment shall not be used until repaired. Competent, trained persons shall perform all repairs.

28.4 Bath rooms\ Toilets

Wiring within bathrooms / toilets shall be restricted to the minimum possible and kept out of reach.
Surface wiring systems shall not employ metallic conduit metal trunking or exposed earthing of bonding conductor. Water heaters shall be permanently connected to the electricity supply through a double pole linked switch, is separate from and within easy reach of the heater. The wiring from the heater shall be directly connected to that switch without plugs and sockets.

28.5 Outdoor Installations

All out door cable installation shall be weather proof. Only galvanized steel conduit, MICC, or Armored cable shall be used for out door cable installations temporary lighting shall be restricted to 110volts only.
If additional lights are frequently required, light fittings shall be permanently

28.6 Tents

Electrical installations normally are not provided for tents. If approved, they shall not exceed 25 volts single phase with center point earthed

Records	Retention Time

Appendix

HSE-P19

Control of Substances Hazardous to Health (COSHH)

Control of Substances Hazardous to Health (COSHH)

Department	Document Type	Document Title
HSE	Control of Substances Hazardous to Health (COSHH)	Control of Substances Hazardous to Health (COSHH)

Issue Approval	
Prepared By	**Approved By**
Bahaa Eddin Weld Ali *Sr.Safety Engineer*	Dr. Mohammad Al-Sulaity *Manager, HSE*
Signature:	**Signature:**

Issue Record

Issue No.	Date	Reason for re-issuing Procedure
0.0	14/10/2004	First issue of the Procedure.
1.0		
2.0		
3.0		
4.0		
5.0		

Review Frequency : Yearly.

Table of Contents

Contents	Page
Title Page	1
Document Control & Issue Record Page	2
Table of Contents	3
Purpose	4
Scope	4
Responsibilities & Authorities	4
Abbreviations & Terminologies	5
5- TRAINING	6
6- General	6-7
7- Health surveillance	7
8- Disposal of chemicals	7

ATTACHMENT

A1 To A11 (SUBTANCES CLASSIFIED AS HAZARDOUS

1. Purpose

The purpose of this part is to ensure protection to the health and safety of employees and other in the vicinity, including members of the public, from the harmful effects of working with substances hazardous to health is provided and to minimize the impact of such work on the environment.

2. Scope

The information contained in this part assist management and employees in ensuring that they are fully aware of these risks and the precaution that will need to be taken this is achieved through:-

- Ensuring employees are trained in the use and storage of hazardous substances enabling them to be fully aware of the risks involved and precautions to be taken.
- Ensuring assessments are wade to determine the risks to health and environment and precautions are in place.

3. Responsibilities & Authorities

The responsibility for ensuring compliance with these rules & conditions, both in respect of his own employees, those of his sub – contractions and any other person liable to be affected by his operations, shall rest with the divisional manager / Head of dept.

Material data sheets for substances in use shall be kept and provided to employees who come in to contact with substances hazardous to health.

Employees are responsible for making proper use of all control measures including using personal protective equipment, personal hygiene facilities etc. and report defects immediately to their supervisor.

4-ABBREVIATIONS & TERMINOLOGIES

MEL	A maximum exposure limit
OES	occupational exposure standard
Time weighted average(TWA)	This refers to the concentration of airborne toxic materials which have been weighted for a certain time duration, usually 8 hours.
Maximum Exposure limits (MEL)	This refers to the maximum concentration to which workers can be exposed for a short period of time (15 minutes) for only four times throughout the day with at least one hour between exposures.
COSHH	Control of Substances Hazardous to Health

Substances harmful to health – shall wean

- Any toxic, harmful, corrosive or irritant substance.
- Any substance for which a maximum exposure limit (MEL) or occupational exposure standard (OES) has been set.
- Substantial quantities of any dust.
- Micro – Organisms.
- Any substance creating a comparable hatred.

5) TRAINING

Persons administering these rules & conditions shall receive training to the standard of which must be approved by the Health, Safety & environment department.

Personnel using hazardous substances shall receive formal training in the safe handling and use of such substances. Records of such training shall be available on site for inspection.

The information required by employees, or others on site who may be affected by the us of hazardous substances includes:

- The nature and degree of risks to health from exposure, that is the assessment results.
- The control measures adopted, the reasons for them their use.
- Reasons for the use of personal protective equipment.
- The monitoring arrangements where appropriate, including results where MEL is exceeded.
- Where appropriate the purpose and arrangements for health surveillance and access to individual records.

Instruction shall enable workers to know and understand what they should do and the precaution required at all stages of the operation, including emergency situations.

6) General

The basis of the control of Substance hazardous to health (COSHH) is for an assessment of the risks to health and environment arising from work with any

particular substance or combination of substances to be wade.

The main elements of an assessment are

- Identification of the hazardous substance involved.
- Determination if the work present a risk of exposure.
- Determination of the degree of exposure .
- Decisions on the action needed to prevent or control risks and if monitoring and / or health surveillance are needed. present precautions need to be reviewed.

Most suppliers provide adequate information through packaging labels and data sheets for substance identifications. where such information is inadequate, the supplier shall be contacted.

After gathering information on the substance, the risk of exposure shall be considered by looking at working methods and practices. Exposure can arise through direct work. Indirect exposing to non – involved personnel can arise through, for example, the drift of sprayed paints by an adjacent user.

Following assessment steps shall be taken to determine the measures required to prevent or control exposure according to the risks, monitoring or health surveillance.

Where all possibilities of prevention are exhausted then one or more combinations of control measures shall be considered. Before resorting to personal protective equipment every attempt shall be wade to adopt any of the following, (but personal protective equipment may be

necessary on a temporary basis where other measures are not technically feasible at present to adequately control exposure):

- Use of plant (e.g. by enclosure) or working methods (e.g. by wet methods) to minimize exposure to hazardous substances, in particular in the form of dusts and fumes.
- Local exhaust ventilation (on portable on fixed plant), this can be applied often with enclosure.
- Blower and extraction ventilation, in confined or other enclosed spaces.
- Adequate levels of general / dilution ventilation.
- Reduction of the number of employees in an area. this may well involve the re - phasing of particular work.
- Reduce employees period of exposure.
- Prohibit clearing of work area by wet or vacuum methods.
- Prohibit eating, drinking or smoking in contaminated areas.
- Provision of good hygiene facilities for washing, eating and storage of clothing.

This is particularly important in the control of ingestion and skin contact risks.

Personal protective equipment shall be capable of controlling exposure and comply with the standards detailed in part – **4** of this manual – personal protective equipment.

7) Health surveillance

The aim of health surveillance is to protect employees health by early detection of adverse effects of exposure to hazardous substances, it may also serve to check on the adequacy of control measures.

The need for surveillance shall be considered as part of the assessment. surveillance is appropriate where a disease or adverse effect may be reacted to exposure, and it is likely that this could arise in the circumstances of the work, and there are valid techniques for detecting the disease or effect.

8) Disposal of chemicals

Chemicals shall be disposed off is such a manner as specified by Kahramaa Department of Health, Safety & Environment.

Attachment A1

Part 20 Control of Substances Hazardous to Health COSHH Attachment A1

Attachment A – SUBSTANCES CLASSIFIED AS HAZARDOUS

Substance	8 – Hour - TWA		10 Min TWA	
	PPM	Mg/m3	PPM	Mg/m3
Acetaldehyde	100	150	180	270
Acetic Acid	10	25	15	37
Acrylaylamide	-	0.3	-	-
Acrylonitrile	-	4	-	-
Acetone	750	1780	1000	2375
Acrolein	01	0.25	0.3	0.8
Aluminum fumes (as Al)	-	5	-	-
Aluminium metal & oxide	-	5	-	-
Aluminium salts, soluble	-	2	-	-
Aminodimethylbenzene	2	10	10	50
Ammonia	25	17	35	24
Amosite	4 hour TWA 0.2 (fibers / m)		10min.TWA 0.6 (fibres / ml)	
Analine	2	10	5	20
Antimony & compounds (as Sb)		0.5	-	-
Arsnic &compounds, except AH3 (as As)		0.1		
Arsine (AH3)	0.05	0.2	-	-
Asbeslos	: see Amosite, Crocidolite and Chrysolite.			
Asphalt petroleum fumes	-	5	-	10
Attapulgite, inhalable	-	10	-	-

Attachment A2

Substance	8 – Hour - TWA		10 Min TWA	
	PPM	Mg/m3	PPM	Mg/m3
Azote (nitrogen)	ASPHYXIANT			
Barium sulphate respirable dust	-	2	-	-
Benzene*	5	15	-	-
Bromine	0.1	0.7	0.3	2
Bromochloromethean	0.1	0.7	0.3	2
Bromoethane	200	890	250	1300
Bromomethane	5	20	15	60
1,3 Butadiene *	10	22	-	-
N – Butane	600	1430	750	1780
Butane 1-o1	50	150	50	150
Butane 2-o1	100	300	150	450
Butane 2 – one	200	590	300	885
2 – Butoxythanol *	255	120	-	-
N – Butyl acetate	150	710	200	950
Cadmium & Cadmium Copds. Except CdS*	0.05	-	-	-
Cadmium oxide fume (as Cd) *		0.05	-	0.05
CdS pigments respirable dust (as Cd) *	-	0.04	-	-
Calcium carbonate total inhalable dust	-	10	-	-
Calcium carbonate respirable dust	-	5	-	-
Calcium hydroxide	-	5	-	-

Attachment A3

Substance	8 – Hour - TWA		10 Min TWA	
	PPM	Mg/m3	PPM	Mg/m3
Calcium oxide	-	2	-	-
Calcium silicate total inhalable dust 10	-	10	-	-
Calcium silicate , repirable dust	-	5	-	-
Carbaryl (ISO)	-	5	-	10
Carbofuran (ISO)	-	0.1	-	-
Carbon, respirable	-	5	-	-
Carbon inhalabel	-	10	-	-
Carbon black	-	3.5	-	7
Carbon disulphide*	10	30	-	-
Carbon monoxide	50	55	300	330
Carbon tetrachloride	0.5	30	-	-
Cement , inhalable dust	-	10	-	-
Chlorine	0.5	1.5	1	3
Clorodbenzene	75	350	-	-
Chlorodifluoromathane	1000	3500	-	-
Chloroform	2	9.8	-	-
Chloromethane	50	105	100	210
Chromium	-	0.5	-	-
Chromium (11) compounds (as Cr)	-	0.5	-	-
Chromium(111) compounds (as Cr)	-	0.5	-	-

Attachment A4

Substance	8 – Hour - TWA		10 Min TWA	
	PPM	Mg/m3	PPM	Mg/m3
Chromium (VI) compounds (as Cr)	-	0.05	-	-
Chrysolite	0.5 (fibers/ 4Hour TWA)		1.5 (10 Min. TWA)	
Copper, fume	-	0.02	-	-
Copper, dusts and mists	-	1	-	2
Crocidolite	0.2 (fibers/ml, 4 Hour TWA)		0.6 (10Min.TWA)	
Christobalite total inhalable ust	-	0.15	-	-
Christobalite respirabe dust *	-	0.05	-	-
Cumene	50	245	75	365
Cyanides except HCN, (CN) 2, CICN as – CN	-	5	-	-
Cyclohexene	300	1015	-	-
1.2 – Diaminoethane	10	25	-	-
Diatomaceous earth Natural, esp. Dust	-	1.5	-	-
Dibromoethane *	0.5	4	-	-
o – Dichlorobenzene	-	-	50	300
P - Dichlorobenzene	75	450	110	675
1,1- Dichloroethane	200	810	400	1620
1.2- Dichloroethane	10	40	15	60
1,1- Dichloroethylene	10	40	-	-
Dichlorofluoromethane	10	40	-	-

Attachment A5

Substance	8 – Hour - TWA		10 Min TWA	
	PPM	Mg/m3	PPM	Mg/m3
Dichloromethane *	100	350	-	-
Dichlorophenol	0.5	-	-	-
Diethanolamine	3	15	-	-
Diethylamine	10	30	25	75
Diethyl ether	400	1200	500	1500
Diflorochloromethane	See Chlorodifluoromethane			
Difluorodibromomethane	100	860	150	1290
Divanadium pent oxide:	See vanadium pentoxide			
Ethane:	Asphyxiante gas			
Ethylene dibromide *	See Dibroethane			
Ethanol	1000	1900	-	-
Ethanolamine	3	8	6	15
Ether	400	1200	500	1500
2- Ethoxyethanol *	10	37	-	-
2- Ethoxyethyl acetate *	10	54	-	-
Ethyl alcohol	1000	1900	-	-
Ethylene	200	-	-	-
Ethylene Dichlorodie	See 1,2 - Dichloroethane			
Ethyl ether:	See Ether			
Ethylating dichloride	See 1,1 - Dichloroethane			
Ethyl mercaptan	0.5	1	2	3

Attachment A6

Substance	8 – Hour - TWA		10 Min TWA	
	PPM	Mg/m3	PPM	Mg/m3
Fenthion	-	0.1	-	-
Fibrous glass dust	-	10	-	-
Fofmaldehyde (formalin) *	2	2.5	2	2.5
Formic acid	5	9	-	-
Furmic (2-Furaldehyde)	2	2	10	40
Gasoline	300	900	500	1500
Gatch, total inhable	-	10	-	-
Gatch, respirable	-	5	-	-
Gluteraldehyde	-	-	0.2	0.7
Glycerol mist	-	10	-	-
Gypsum total inhalable dust	-	10	-	-
Gypsum respirable	-	5	-	-
N - Heptane	400	1600	500	2000
Hexane, all somersexc.n-H	500	1800	1000	3600
n-Hexane	20	70	-	-
Hydrazine	0.1	0.1	-	-
Hydrogen Cyanide (HCN)	-	-	10	10
Hydrogen Sulphide	10	14	15	21
Hydrogen chloride	-	-	5	7
Hydrogen fluoride (Hydrofluoric acid)	-	-	3	2.5
Hydroguinonc	-	2	-	4

Attachment A7

Substance	8 – Hour - TWA		10 Min TWA	
	PPM	Mg/m3	PPM	Mg/m3
Iron oxide, fume (as Fe)	-	5	-	10
Isocyanates, all *	-	0.02	-	0.07
Isopropyl Benzene:	See Cumene			
Lead and compounds, except TEL (as Pb) *	-	0.15	-	-
Limestone total inhalable dust	10	-	-	-
Limestone, respirale dust	-	5	-	-
Liquefied petroleum gas	1000	1800	1250	2250
Malathion (ISO)	-	10	-	-
Manganese fume (as Mn)	-	1	-	3
Manganese and compounds	-	5	-	-
Man made mineral fibres *	-	5	-	-
Mercaptoacetic acid	1	5	-	-
Mercury alkyls (as Hg)	-	0.01	-	0.03
Mercury and compds. Exc. Hg alkyls (Hg)	-	0.05	-	0.15
Methane:	Ashphyxiant gas			
Methanol	200	260	250	310
2- Methoxyethanol *	5	16		
2- Methoxyethyl acetate *	5	24		
Methyl alcohol	200	260	250	310
Methylene chloride	-	-	-	-

Attachment A8

Substance	8 – Hour - TWA		10 Min TWA	
	PPM	Mg/m3	PPM	Mg/m3
Methyl isocyanate	-	-	-	-
Methyl mercaptan	00.5	1	-	-
Methyl parathion	See parathion methyl			
Mevinphos (ISO)	0.01	0.1	0.03	0.3
Mica total inhalable dust	-	10	-	-
Mica, epirable dust		1	-	-
Naptha	-	-	-	-
Naphthalene (coal tar)	-	3	6	-
Nickel carbonyl	See Tetracarbonyl Nickel			
Nickel and compounds	-	0.1-0.5	-	0.5
Nitric acid	2	5	4	10
Nitric oxide	25	30	35	45
Nitro benzene	1	5	2	10 Sk
Nitrogen dioxide	3	5	5	9
Nitrogen monoxide	25	30	35	45
Nitrous oxide	5	-	-	-
n-Octane	300	1450	375	1800
Oil mist mineral	-	5	-	10
Orthophosphoric acid	-	1	-	3
Oxalic acid	-	1	-	2
Ozone	0.1	0.2	0.3	0.6

Attachment A9

Substance	8 – Hour - TWA		10 Min TWA	
	PPM	Mg/m3	PPM	Mg/m3
PCBs	-	0.5	-	-
Parafin wax, fume	-	2	-	6
Parathion (ISO)	-	0.1	-	0.3
Parathion methyl (ISO)	-	0.2	-	0.6
Pentane, all ismers	600	1800	750	2250
Pentane – 2 – one	200	700	250	875
Pentane – 3 – one	200	700	250	785
Phenol	5	19	10	38
Phosgene	0.1	0.4	-	-
Phosphine	-	-	0.3	0.4
Phosphoric acid	See Orthophosphoric acid			
Plaster of paris total inhalable	10	-	-	-
Plaster of parspirable dust	-	5	-	-
Polychlorinated biphenyls (PCBs) See PCBs				
Potassium hydroxide	-	-	-	2
Propane	Asphyxiate Gas			
Propanel,2 diol T.Vap & part.	150	470	-	-
Particulates	-	10	-	-
n-propanol	200	500	250	625
Propan 1-o1	200	500	250	625

Attachment A10

Substance	8 – Hour - TWA		10 Min TWA	
	PPM	Mg/m3	PPM	Mg/m3
Propan 2 – o1	400	980	500	1225
Propylene:	Asphyxiant gas			
Quartz, crystalline total inhal dust	-	0.3	-	-
Quartz, respirable dust	-	0.1	-	-
Silica, amorphoustotal inhalable dust	-	6	-	-
Silica, Amorphos, respirable dust	-	3	-	-
Silica, crystalline (dust):	See Quartz, Cristobalite, Tridymite			
Silica, fused, total inhalable dust	-	0.3	-	-
Silica, fused respirable dust	-	0.1	-	-
Silica, respirable	-	0.4	-	-
Sodium hydroxide	-	-	-	2
Sulphur dioxide	2	5	5	13
Sulphric acid	-	1	-	-
Tetracarbonyl Nickel as Ni			0.1	0.24
Tetrachloroethylene	50	335	150	1000
Tetrachyllead (as pd)	-	0.1	-	-
TNT	See 2,4,6 - Trinitrooluene			
Toluene	50	188	150	560
Toluene disocyanate (TDI)	-	0.02	-	0.07
o- Toluidine	2	9	5	22

Attachment A11

Substance	8 – Hour - TWA		10 Min TWA	
	PPM	Mg/m3	PPM	Mg/m3
1.1.1- Tricloroethane *	3500	1900	450	2450
Trichloroethylene *	100	535	150	820
Tridymite total inhalable dust	-	0.15	-	-
Tridymite, rspirable dust	-	0.05	-	-
Trintine	250	-	-	-
2,4,6- Trinitrotoluene (TNT)	0.5	-	-	-
Urea	-	-	-	-
Vanadium Pentoxide inhalable dust,V	0.5	-	-	-
Vanadium pentoxide, rspirable dust	0.05	-	-	-
Vinylchloride	7	-	-	-
Wood dust (hardwood) *	-	5	-	-
Wood dust (soft wood)	-	5	-	-
Xylene, all isomers	100	435	150	650
Zinc oxide, fume/smoke	-	5	-	-

* All Possible precautions be taken and diligence exercised to achieve the policy objectives value.

- Asphyxiates are not chemicals hazardous to health, but they create hazardous conditions by reducing oxygen of the work place to such an extent that life cannot by supported.
- Oxygen content in such circumstances must not be allowed to fall below a minimum of 19.5%.

Records *Retention Time*

Appendix

HSE-P20

ASBESTOS CONTROL

ASBESTOS CONTROL

Department	Document Type	Document Title
HSE	ASBESTOS CONTROL	ASBESTOS CONTROL

Issue Approval	
Prepared By	**Approved By**
Bahaa Eddin Weld Ali *Sr.Safety Engineer*	Dr. Mohammad Al-Sulaity *Manager, HSE*
Signature:	**Signature:**

Issue Record

Issue No.	Date	Reason for re-issuing Procedure
0.0	14/10/2004	First issue of the Procedure
1.0		
2.0		
3.0		
4.0		
5.0		

Review Frequency : Yearly.

Table of Contents

Contents	Page
Title Page	1
Document Control & Issue Record Page	2
Table of Contents	3
Purpose	4
Scope	4
Responsibilities & Authorities	4
TYPES OF ASBESTOS	5
IDENTIFICATION OF ASBESTOS	5
SAMPLING FOR ANALYSIS	5
ASSESSMENT	5-6
CONTROL LIMITS/ACTION LEVELS	
9.1 CONTROL LIMIT	6
9.2 ACTION LEVEL	
RESPIATORY PROTECTIVE EQUIPMENT	6-7
PROTECTIVE CLOTHING	7
STRIPPING OPERATIONS	7-8
DECONTAMINATION UNIT	8
CONTROL AND DISPOSAL OF ASBESTOS WASTE	8
AIR MONITORING	8
REMOVAL OF ENCLOSURE	9
ASBESTOS CEMENT PRODUCTS	9
SELECTION & TRAINING OF PERSONNEL	10
HEALTH RECONRDS & MEDICAL SURVEILLANCE	10

ATTACHMENTS

EXAMPLE OF WORKING PROCEDURES –A

EXAMLE OF WORKING PROCEDURES –B

ASBESTOS LABL MARKING – C

Form

ASBESTOS REGISTRER FORM -1

1. Purpose

When inhaled airborne asbestos fibers represent one of the worlds most insidiously dangerous dusts. The purpose of this part is to describe typical work processes involving its use, and to outline precautions to be taken.

2. Scope

The information contained in this part refers to work with asbestos based thermal or acoustic insulation.

3. Responsibilities & Authorities

Through the implementation of the rules contained in this part, the Line Management responsibility is to provide a safe system of work.

4) TYPES OF ASBESTOS

There are three types of asbestos to found in common use, they are:

- **Chrysotile** – Commonly known as "white" asbestos.
- **Crocidolite** – Commonly known as blue asbestos.
- **Amosite** – Commonly known as brown asbestos.

5) IDENTIFICATION OF ASBESTOS

If the presence of asbestos is suspected, work shall not commence until identification of the substance has been made a safe system of work agreed. Identification of asbestos shall be obtained by the following methods:

- Representative sample and analysis at a laboratory;
- Reference to available plan and /or records showing what type of asbestos was used and installed;
- Information available from the supplier of the materials.
  If the suspected material is not analyzed, then it shall be treated as if it were crocidolite or amosite.

6) SAMPLING FOR ANALYSIS

Samples shall be taken from a sufficient variety of locations throughout the work place to ensure that any asbestos likely to be present is identified. Each sample shall have its location recorded against it.
Samples shall be placed in sealed double impervious containers. In most cases a double plastic bag of 5oo gauge will be satisfactory.
All containers shall be marked "asbestos samples – do not open / inhale dust".
When taking samples care shall be taken to create as little disturbance as possible. Any surfaces damage shall be sealed and contaminated surfaces cleaned.

Only trained, qualified, and designated employees in the areas of asbestos sampling, monitoring and general industrial hygiene are authorized to carry out sampling procedures. Appropriate personal protective equipment and clothing are required in accordance with Section 8 and 9 of this Part.

7) ASSESSMENT

Work shall not commence until an assessment has been made in Writing.
The assessment shall cover the following points:

- The type of work;
- The type of asbestos or the assumption that it is amosite or crocidolite, and the results of analysis;
- Details of expected exposure noting:
  -whether they are liable to exceed a control limit or action level;
  -if above a control limit, the exposure, so the appropriate respiratory protected equipment can be selected;
  -if exposure is intermittent, the frequency and duration of exposures;

-whether anyone other than employees may be exposed, and their expected exposure and what preventive measures will be taken to eliminate exposure;
-where applicable, results available from air monitoring.

The steps to be taken to control exposure and the release of asbestos to the environment.
Where applicable, procedures for the provision and use of respiratory protective equipment.
Procedures for the removal of all traces of asbestos waste from site.
In the case of demolition, asbestos shall be removed, where reasonably practicable before demolition begins.

8) CONTROL LIMITS / ACTION LEVELS

9.1 Control Limit

For asbestos consisting of or containing any crocidolite or amosite:

- 0.2 fibers/ml of air when measured as a time weighted average over any 4 hour period;
- 0.6 fiber/ml of air when measured as a time weighted average over any 10 minute period;

For asbestos consisting of or containing other types of asbestos but not crocidolite or amosite:

- 0.5 fiber/ml of air when measured as a time weighted average over 4 hour period;
- 1.5 fiber/ml of air when measured as a time weighted average over any 10 minute period.

9.2 Action Level

Refer to cumulative exposures to asbestos over a continuous 12-week period:

- For asbestos consisting of or containing any crccidolite or amosite 48 fiber-hour/ml air;
- For asbestos consisting of or containing any other type of asbestos but not crocidolite or amosite 120 fiber-hour/ml air;
- Where both type of exposures are encountered, a proportionate number of fiber-hour/ml of air.

The above figures show the upper limits of permitted exposure, however every effort shall be made to reduce levels where reasonably practicable.

9)RESPIRATORY PROTECTIVE EQUIPMENT

The choice of apparatus will depend upon the type and levels of dust likely to be encountered. Half mask and disposable respirators shall not be used as these are not approved for use in asbestos insulation removal where the asbestos is either crocidolite or amosite. Where crocidolite or amosite is present, High Efficiency Particulate Air (HEPA) respirators shall be used.
All employees shall be trained in the maintenance of respiratory protective equipment.

The respiratory protective equipment shall be:

- Well maintained;
- Suitable for both the work being carried out, and the wearer (for the fit and the achievement of a face seal;
- Cleaned by vacuuming before removal by the wearer;
- Cleaned, disinfected and checked by a competent person before another person uses it.

10) PROTECTIVE CLOTHING

Protective clothing shall be provided to and be worn by all persons entering the contaminated area. This shall consist of:

- Disposable dust proof overalls with a zip 'Verlo' type fastening, with an integral hood, elasticized cuffs and ankles;
- Suitable footwear: wellington or rubber boots will normally be worn for ease of cleaning.

For wet techniques, overalls and footwear shall be waterproof.
Sufficient spare sets of protective clothing shall be available.
Protective clothing shall be vacuumed before the wearer leaves the work area and the changing facilities.
Contaminated clothing shall not be worn outside the work area, or the decontaminated side of the changing facilities.

11) STRIPPING OPERATION

Stripping methods chosen shall be designed to minimize the creation of dust.
Where practicable the work area must be totally enclosed to prevent the escape of asbestos dust, and not impede emergency escape routes.
Existing plant and equipment in the work area shall be removed or covered/sealed in impervious sheets before work begins.
The enclosure material, normally 1000-gauge polythene, shall be maintained and visually inspected at the beginning of each work period. A smoke test will detect leaks.
Where practicable enclosed areas shall be provided with air extraction equipment, fitted with a high efficiency filter and clean pre-filter at the start of the job to create a negative pressure.
Air extraction shall continue throughout the work, during break and continue for at least one hour after the end of each shift.
Air extraction equipment shall be inspected weekly when in used and thoroughly examined every 6 months. Written records shall kept for inspection.
Only authorized personnel, wearing suitable protective equipment are allowed within the enclosure.
Warning notices depicting it as an asbestos work and respirator zone shall be posted at entrances to the area.
Slurry from "wet stripping" shall not pass directly into the drains. Filters in drain inlets shall be treated as asbestos waste. Electrical equipment shall be constructed so as not to be affected by wet technique.
All debris shall be cleared at the end of each work period. Damp area shall be allowed to dry before vacuuming.

12) DECONTAMINATION UNIT

A decontamination unit shall be provided consisting of three separated compartment:

- A clean area to store and dress into uncontaminated clothing;
- An area with shower and wash basin facilities supplied by hot and cold or warm water, soap and individual towels;
- A dirty area to remove and store contaminated clothing.

It shall be kept clean at all times and ventilated when in use. The ventilation shall be by a fan fitted with a high efficiency filter in the dirty end. There shall be airflow from the clean to dirty area.
Suitable containers for the collection of used respiratory equipment and protective clothing that is to be removed for disposal shall be provided.
The decontamination unit shall have direct access from the working area and be effectively sealed to the working area. Where this is not possible, then a transit working situation is to be established, (see attached examples of different working procedures).
No one is to bypass the decontamination process.

13) CONTROL AND DISPOSAL OF ASBESTOS WASTE

Prior to the start of removal or demolition of asbestos, site arrangements shall be made for the identified asbestos to be removed to the licensed unit to prevent long term storage on site. Accumulated material shall be removed regularly and placed in suitable containers. Containers must be sealed and cleaned before removal from the enclosure and kept in a suitable and clearly marked storage area if disposal is not immediate.
Containers shall be constructed and maintained to prevent any of contents escaping during handling. For loose material and smaller fragment double plastic bagging is suitable. Stronger container are necessary where the contents are liable to puncture plastic bags.
Large sheets of rigid insulation material shall not be cut up but wrapped in sheet plastic and placed in a sealed container.
Asbestos waste shall be labeled as shown on attached example. Where any waste contains crocidolite "Contain Crocidolite/Blue Asbestos and the warning 'DO not Inhale' shall replace the words 'Contains Asbestos'.
Bags containing loose/fibers waste shall be transported in an enclosed vehicle.

14) AIR MONITORING

A employee who is trained and has information to complete the task shall carry out air monitoring.
Results of any sampling shall be retained for a period of 5years and in the case of an individual 30 years. Records of such results shall be made available to the individual employees concerned.

15) REMOVAL OF ENCLOSURE

The following procedure shall be followed after asbestos removal work:

- Thoroughly vacuum the inside of the enclosure;
- If it is wet inside the enclosure, it must be allowed to dry out and be cleaned once again with the vacuum;
- A thorough visual inspection to be carried out, to establish it is clean, dry and free from any visible debris;
- Depending on the size of enclosure, an adequate number of disturbed air samples shall be taken;
- Sample results must be less than 0.01 fibers/ml.If results are in excess of that reading, then steps must be taken to identify the source of contamination;
- Dismantling of the enclosure can be carried out after the inner surface has been sealed.

16) ASBESTOS CEMENT PRODUCTS

Light work with hand tools on asbestos cement which is in good condition, shall not give rise to respirable fiber concentrations in excess of the control limit.
However, the procedures outlined below shall be adhered to when dealing with asbestos cement in the following circumstances

- Asbestos cement containing crocidolite or amosite;
- Asbestos cement which is brittle or has a powder surface;
- When using power tools;
- In demolition or removal where the sheeting breaks during handling.

Immediate work area to be cleared as much as possible, fixed objects to be covered with impervious dust sheets.
Barriers and warning notices "Respirator Area" shall be positioned.
The operative to wear an approved respirator and disposable overalls and overshoes.
The material shall be dampened down using water spray.
Fixing to be removed, where possible without damage to material.
Broken material shall be double wrapped or double bagged.
Whole material, where reasonable practicable, and wrapped material shall be placed in lockable skips and arrangements for disposal made.
Upon completion of work, area to be thoroughly cleaned.
Protective clothing removed and bagged and sealed for disposal.
Respirator removed, washed and disinfected.
Personal decontamination by washing hands and face.

17) SELECTION & TRAINING OF PERSONNEL

Persons with any medical disablement (whether physical or psychological) which would prevent them wearing protective equipment or working in an enclosed space, shall not be employed on asbestos stripping.

Persons with excessive facial hair, e.g. beard, may find difficulty in achieving a seal with respiratory equipment. This shall be considered before selection.
All persons shall be given adequate information, instruction and training before undertaking any work with asbestos and shall be supervised at all times.

18) HEALTH RECORDS & MEDICAL SURVEILLANCE

Any employee likely to be exposed to asbestos exceeding the action level shall have a medical examination, before such exposure takes place, and every two years thereafter while the exposure continues.
A health record shall be kept of any employee working with asbestos dust, which exceeds the action level. This record must be kept for 30 years after the last entry, and be available for inspection by the individual employees.

The health record shall contain the following information:

- Surname, Forename, Sex, Date of Birth, Permanent Address;
- Record types of work performed, its location where relevant, start and end dates, average duration of exposure in hours per week;
- A record of any previous work with asbestos by prior employment;
- Dates of medical examination

Attachment – A

EXAMPLE WORKING PROCEDURE 'A'

This is to be followed when decontamination units are placed adjacent to the point of work.

Starting work

- Enter door of unit marked "Clean End"
- Remove all outdoor clothing.
- Fit clean respirator.
- Pass through shower section without showering.
- Dress in following outfit, hooded overalls, Wellington boots and gloves.
- Pass through exit door at "Dirty End" to working area.

Leaving Work

- Remove all loose fibers from overalls, Wellingtons and respirator using vacuum.
- Enter the "Dirty End" of the decontamination unit.
- Remove all clothing except respirator, and store.
- Pass into shower with respirator on, shower head and shoulders thoroughly. Remove respirator face piece, hang up nearby, then continue to shower rest of body.
- Pass to "Clean End", with respirator and store it, dry and dress, and leave the unit.

Attachment – B

EXAMPLE WORKING PROCEDURE "B"

This procedure is to be adopted when the decontamination unit is not adjacent to the point of work. This situation is slightly different bearing in mind the worker may have to walk through the "Clean" zone to reach the unit.

Starting Work

- Enter door marked "Clean".
- Remove outdoor clothing.
- Fit clean respirator.
- Pass through shower section into "Dirty End".
- Dress into transit overalls.
- Pass through exit door and walk to multi-stage airlock.
- Enter clean stage of airlock and remove "Transit" overalls.
- Pass to "Dirty End" of airlock and dress in the following working outfit: hooded overalls, Wellington boots, gloves.
- Pass from airlock into stripping zone.

Leaving Work

- Remove all loose fibers from overalls, Wellingtons and respirator, using vacuum cleaner.
- Remove all clothing except respirator, and store.
- Pass to "Clean End" of airlock and put on "Transit" overalls previously worn.
- Walk to "Dirty End" of decontamination unit.
- Remove all clothing except respirator and store.
- Pass into shower with respirator on. Shower head and shoulders thoroughly then remove respirator face piece, hang up nearby, then continue to shower rest of body.
- Pass to 'clean End" with the respirator and store it, dry, dress and leave the unit.

Attachment - C

ASBESTOS LABEL MARKING

DANGER

CONTAINS ASBESTOS FIBERS.

AVOID CREATING DUST.

CANCER AND LUNG DISEASES HAZARD.

Form - 1

ASBESTOS REGISTER FORM

SHEET NO :……..…

Site		Date		
Samplers Name		Designation	Signature	
1 2				
Product Name	MESC *	Supplier	Propose of use	Approx. Qty.

Visual Description Of Product:

Condition Of The Product:

Area Of Application:

State whether the product is exposed to atmosphere or encapsulated, sealed:

Analysis:

Recommendations and priority:

MESC: Maximum estimated content

HSE-P15/F1	Issue:0	00/00/0000

Records	Retention Time
ASBESTOS REGISTER FORM HSE-P15/F1	

Appendix

HSE-M1-P21

Lead

Lead

Department	Document Type	Document Title
HSE	Lead	Lead

Issue Approval	
Prepared By	**Approved By**
Bahaa Eddin Weld Ali *Sr.Safety Engineer*	Dr. Mohammad Al-Sulaity *Manager, HSE*
Signature:	**Signature:**

Issue Record

Issue No.	Date	Reason for re-issuing Procedure
0.0	14/10/2004	First issue of the Procedure.
1.0		
2.0		
3.0		
4.0		
5.0		

Review Frequency : Yearly.

Table of Contents

Contents	Page
Title Page	1
Document Control & Issue Record Page	2
Table of Contents	3
Purpose	4
SCOPE	4
RESPONIBILITIES & AUTHORITIES	4
ABBREVIATIONS & TERMINOLOGIES	5
GENERAL DUTIES	6
CONTROL MEASURES	6-7
PROTECTIVE CLOTHING & EQUIPMENT	7-8-9
WORKING PROEDURES	9

1. Purpose

The purpose of the information contained in this part is to ensure that precautions are in place for any "work" from which lead arises.

2. Scope

Lead is produced, manufactured and encountered in a number of forms and used in a wide range of industries. Lead poisoning was one of the first health hazards at work to be recognized.

- In the form of Lead dust, fumes or vapor which are liable to be inhaled.
- In the form of lead power, dust, fumes or vapor which is liable to be ingested.
- In the form of lead compounds, (e.g. concentrates lead alkalis) which are liable to be absorbed through skin.

"Work" includes any of the following activities: handling, moving, storage, processing, repainting, maintenance, demolitions or removal.

3. Responsibilities & Authorities

Through the implementation of the rules contained in this part, the Line Supervisors responsibility is to provide a safe system of work.

3) Abbreviations & Terminologies

TWA	Time Weighted Average
TLV	Threshold limit value
RPE	Respiratory Protective Equipment

5) General Duties

The basic measure to protect employees from absorbing lead is the prevention of the escape of lead dust, fume or vapor into the workplace. The amount of lead, in the air, in the breathing zone of a worker, shall below the agreed lead in the air standard, which for most circumstances is specified in terms of an 8 hour Time Weighted Average (TWA).

An assessment of the work shall be made and where any assessment shows that exposure may be "significant" then air monitoring shall be carried out on a regular basis to check that control measures are working effectively, and the lead in air standard is not being exceeded.
The term "significant" means that the atmosphere contains in excess of half the lead in air standard (Threshold limit value) of 0,15 mg/m^3, i.e. 0,073 mg/m^3 in the case of tetraethyl lead, the lead air standard is 0,1 mg/m^3 for an 8 hour time weighted average (TWA).
The supervisor shall ensure that he protects not only his employees but others who are engaged on work in the vicinity where lead work is being carried out, and members of the public.
An assessment of the nature and degree of exposure to lead shall be made prior to the commencement of work.

An employee trained in lead assessments shall carry out the assessment.
Exposure to be considered shall be that of:

- The employees working with lead.
- Persons other than the employees working with lead but in an area which represents a possible exposure.
- Other persons, not employed, who may be affected by the work activity, e.g. persons living near the work place who may be affected by the emission of lead dust and fumes from the work place, and the families of persons exposed to lead at work, who may be affected by lead carried home on clothing and footwear.

Information, instruction and training shall be given to employees who are liable to be exposed to lead.
Regular monitoring checks and assessments of lead in air levels shall be carried out.
Respiratory protective equipment shall be provided to all employees who are liable to be exposed to a significant level of airborne lead.
Each employee who is liable to be exposed to a significant level of lead shall be provided with personal protective clothing.
Washing and changing facilities with separate storage facilities for both clean contaminated clothing shall be provided.

6) Control Measures

The exposure of persons working with lead shall be controlled at the source, as far as possible.
The following control measures shall be applicable:

Removal and Disposal

Where structures coated with lead paint need to be retained, the possibility of removing the paint shall be considered to prevent any further health risk.

Job Rotation
Those employees working with lead shall be rotated with working in other areas so as to limit exposure.

Mechanical Devices

The use of various forms of shears or croppers in demolition work to cut even substantial sections of structural steel, resulting in a reduction in exposure as compared with using flame cutting equipment. If this type of cutting equipment is excavator mounted, the cutting of steel can be undertaken with a reduction in exposure of employees to fume and lead dust, or to safety hazards from working at heights.

Local Exhaust ventilation

When power tools such as sanders and needle guns are sued to remove lead based paint from steel, and then a cowl shall be fitted over the tools, connected by flexible hoses to an air extraction system fitted with a suitable filter.

Enclosures

In circumstances where considerable quantities of lead dust and fumes may be generated (such as burning steel coated with lead based paint) and persons not engaged with the
work are working in close proximity, then the area shall be enclosed with tarpaulin sheets and install an extraction system with a filter.
N.B. if oxyacetylene burning is being used, then the tarpaulin sheets shall be flame proof.

Wetting

Lead emissions can be considerably reduced if wet sanding is used in the stripping of lead paint, as opposed to dry sanding.
Where large amounts of lead dust may have to be handled e.g. during demolition, then the dust shall be dampened with a fine mist spray and then soaked thoroughly before collection.

Hygiene

Persons working with lead shall be prohibited from eating, drinking and smoking at the work site.

7) Protective Clothing & Equipment

Protective clothing shall be provided for each employee engaged on lead work.The types of protective equipment to be issued are as follows

Overalls

As sufficient number of overalls shall be available to allow for either disposal or laundering.
In other that lead is not retained in the overalls, they shall not have any external pockets and to provide maximum protection, the overalls shall be close fitting at the ankles and cuffs, preferably elasticized and shall incorporate a hood.

Where tetraethyl lead is likely to be encountered, such as in the demolition of tanks that have contained lead based fuel, then overalls shall be impervious to it. Also if the work involves burning, welding or some other process where there is fire risk, then the overalls shall be flame proof.

Footwear

Only is situations where employees may have to walk through quantities of lead dust should it be necessary to wear protective Wellingtons, with the overalls being pulled down on the outside of the footwear.

Gloves

Gloves shall always be worn, not only to provide normal protection against abrasion and stain damage, but also limit the possibility of lead being trapped under nails and ingested with food. Where there is exposure to tetraethyl lead arising out of work in or on tanks having contained lead based fuel,
impervious gloves will be required to prevent absorption though the skin of the lead alkyls.

Respiratory Protective Equipment (RPE)

Where there is a risk of exposure to levels in excess of the lead in air standard 0,15 mg/m^3 T.W. A, respirators shall be worn.

RPE comprises of two types

- Breathing apparatus: defined as " apparatus enabling its users to breathe independently of the ambient atmosphere"
- Respirators: Defined as " a device in which the inhaled air passes through a filter medium to remove contaminants"

The respirator selected shall be for the particular task and circumstances. Approved respirator are given a performance value and respirator are given a performance value and a level of lead in air for which they are suitable. The manufacturer will specify the performance of different type of respirator.

The following is a guide to the equipment appropriate to the circumstances.

- Approved dust respirators: gives protection up to ten times the threshold limit value.
- Ori – nasal positive pressure respirator: up to twenty times the threshold limit value.
- Full – face piece positive pressure respirator with thigh efficiency filter: up to five hundred times the threshold limit value.
- Compressed air breathing apparatus with demand value: up to two thousand times the threshold limit value (particularly suitable in confined space and for use against organic lead compounds).

The following factors shall be used in determining the type of respirators to be used:

- The probable concentrations of lead in the air
- The physical characteristics of the wearer.
- The location and duration of the work e.g. hot work many require a respirator which provides a cool air feed to the wearer, or work at high

levels where access may be difficult, may require a respirator that provides good visibility.

8) Working Procedures

Before work commences a method statement shall be produced.

The following points shall be included in the method statement:

- A description of the works
- The likely level of exposure to lead in the probable duration of the works, determined by air sapling if required.
- The nature of personal protective equipment which shall be worn.
- The location and nature of the hygiene facility.
- The extent of decontamination required for particular work.

Prior to commencing work, written procedures outlining employees requirements shall be produced, which shall include:

- Not to eat, drink or smoke until they have thoroughly decontaminated themselves.
- To report as required for medical examination
- To report any defect in any item of personal protection or hygiene facility.
- To report to the supervisor any matter contained in the procedures that he does not understand or has not received sufficient training to undertake.

Records	Retention Time

Appendix

HSE-M1-P22

Occupational Health

Occupational Health

Department	Document Type	Document Title
HSE	Occupational Health	Occupational Health

Issue Approval	
Prepared By	**Approved By**
Bahaa Eddin Weld Ali *Sr.Safety Engineer*	Dr. Mohammad Al-Sulaity *Manager, HSE*
Signature:	**Signature:**

Issue Record

Issue No.	Date	Reason for re-issuing Procedure
0.0	14/10/2004	First issue of the Procedure.
1.0		
2.0		
3.0		
4.0		
5.0		

Review Frequency : Yearly.

Table of Contents

Contents	Page
Title Page	1
Document Control & Issue Record Page	2
Table of Contents	3
Purpose	4
Scope	4
Responsibilities & Authorities	4
Abbreviations & Terminologies	5
General	6
Health Education	6
First Aid	6-7
Manual Handling	7-8
Noise Control	8-9
Dust	9

1. Purpose

The purpose of this part is to ensure that employees enjoy the best possible good health whilst in and outside work and acquire habits of health living for the future.

2. Scope

To ensure that employees enjoy the best possible good health, this is achieved through:

- Ensuring employees undergo medical examinations prior to starting work and regular intervals throughout their employment with the Kahramaa.
- Ensuring employees are aware of and actively involved in the continuous health education program.

3. Responsibilities & Authorities

Through the implementation of the rules contained in this part, the Human Resources management and the Line Management responsibility to provide a safe system of work.

3) Abbreviations & Terminologies

First – Aid	A post accident strategy vital to prevent loss of life and future deterioration in health following accidental injury, or sudden illness, with the skilled application of accepted principles of treatment, using facilities and materials available at the time.

5) General

Every employee shall undergo a pre-employment medical examination.
A qualified medical practitioner who shall be informed of the type of work the man will undertake will conduct the examination.
The examiner will determine if the man is free from communicable disease and fit to perform the proposed work.

Records will be kept of such examinations if there is any medical reason why the person should not undertake the proposed work, he person shall be informed.

6) Health Education

The basis of any health education program aiming to improve health standards must be hygiene, both personal and in the environment. An acceptable standard of hygiene in domestic accommodation and on work sites can be done by strictly following the rules and conditions detailed in part no. **23** in this manual welfare standard.

Education and the provision of a high standard of washrooms and showers shall encourage personal hygiene.
Specific health problems arising from the use of substances harmful to health in the work environment are detailed in part no. **19** of this manual – control of substances hazardous to health.
Noise has two main characteristics, sound waves, with differing wavelengths and amplitude.
Really excessive noise, of the order of over 96 decibels, is obvious, but subtler, but no les damaging noise, can be quantified only by the expert use of instruments.
When undertaking particularly noisy operations, or operations in confined areas such as cofferdams, the noise levels shall be properly analyzed and take action accordingly. The use of individual ear protection is
sometimes necessary, but it should be the last resort when all other means of reducing noise have failed.
Protection of the eyes in industrial surrounding is essential, damage can result from foreign bodies or fluid bodies or fluids entering the eyes and from excessive light, sunlight, ultra violet light or infra red light.
Every effort shall be made to contain the source of the hazard by means of screen, removing men to a distance etc. In some case, electric are welding for instance, the use of personal pro9tective eye shielding is vital.

The natural resistance some employees have the wearing eye protection can be overcome by both educating them in the reasons they should wear it, and allowing them some choice in the type of eye protection they are given to wear.

7) First Aid

On every work site on which between 5 and 20 persons are employed persons are employed, a first aid box shall be provided and maintained which shall contain a sufficient quantity of first – aid materials and nothing else. The box shall be in charge of a responsible person whose name shall be clearly shown on the outside of the box. Every incident involving the provision of first – aid shall be recorded in writing. The record shall show:

- The name and work number of the person receiving the first aid.
- The date, time and place of the incident.
- Details of the injury.
- The name of the person making the report.

On sites on which over 20 persons are employed a first – aid room manned shall be provided, in the case of a site with between 20 and 50 persons employed, by a qualified first-aired.
When over 50 persons are employed a qualified nurse, with emergency room experience, shall man the first-aid room. The other duties of neither a first – aider nor nurse shall be such as to interfere with the primary function of administering first aid.
The first-aid room shall be provided to the following standard:

- The first-aid room shall be available at all times when employees are at work.
- The room shall be located so as to give access for vehicular transport to hospital.
- The room shall be maintained in a scrupulously clean condition, be adequately lighted and equipped to maintain a comfortable temperature.
- A sink with hot and cold running water, soap, nail brush and paper towels.
- Smooth, impervious worktops.
- A couch with a pillow and blankets.
- An adequate supply of sterile dressings.
- A clinical thermometer
- Clean garments for use by medical staff.
- A store for first-aid materials
- A lidded refuse container.
- A refrigerator.

8) Manual Handling

Many types of injuries result from poor manual handling, these injuries can be either external or internal. External injuries include cuts, bruises, crush injuries and lacerations

to fingers, hands, forearms, ankles and feet. Internal injuries, includes muscle and ligament tears, hernias (ruptures), prolapsed intervertebral discs, damage to knee, ankle shoulder and elbow joints. It is important to understand the damage that manual handling can cause in order to avoid such injury.

All employees, who undertake manual lifting as part of their work, shall undergo a manual handling safety-training course, which describes the injuries involved and the correct way to avoid such injury.

All employees, who undertake manual lifting as part of their work, shall undergo a manual handling safety – training course, which describes the injuries involved and the correct way to avoid such injury.

The following aspects of a load shall be determined prior to attempting to lift and or carry:

- Size, each load may be of the same size but not the same volume, therefore a different lifting technique may be required
- Shape, it is essential to carry a load at the point of balance, different shapes pose a different point of balance.
- Weight, shall be ascertained prior to attempting to lift or carry.
- Lack of rigidity, many materials in packed in sacks etc. The content of which has a tendency to shift, this causes the person carrying the load to become off balance causing strain to muscles and joints.
- Outside surfaces, shall be checked to determine if a sound grip is available or the surface is smooth or abrasive.
- Height, shall be determined from where the load is to be lifted and placed i.e. if the load is picked up at waist level but has to be placed at a height
- above head level, then this can cause strain when lifting.
- Ground and floor surface, shall be determined to void ships etc.
- Headroom whenever a person needs to carry a load and lower his head to gain access or egress this creates a top-heavy bending action which cause middle back and neck strain.
- Temperature and humidity, muscles used to be exercised up in cold weather prior to lifting.

The following below mentioned general rules for safe handling shall be followed:

- No one should attempt to lift any load beyond his capacity. If in doubt get assistance.
- Where mechanical lifting aids are provided, they should be used.
- Extra care should be take when lifting awkward shaped objects.

The following should occur at the moment a force is exerted to lift a load:

- Position the feet correctly. The feet should be placed hip – width apart to provide a large base. One foot should be put forward and to the side of the object, this gives better balance.
- Bend or " unlock" the knees and crouch to the load. The weight will then be safely taken down the spine and the strong leg muscles will do the work.
- Get a firm grip of the load. The load should be gripped by the root of the fingers and the palm of the hand.
- Extend the neck upward by tucking in the chin. This will automatically straighten the back when the load is lifted.
- Keep the arms close to the body. This reduces muscle fatigue.
- Use the leg muscles to lift the weight. Lift straight and smooth in one progressive movement.
- Hand protection should be worn when lifting rough or sharp loads.

9) Noise Control

9.1) General

Periodic noise level surveys shall be performed within areas of work.
A record of noise level surveys shall be kept with particular reference to their project and the equipment involved.
Hearing protection shall be required to be provided and used when noise level exceeds 85 dB over a period of 8 working hours.
Noise reduction should be at a source, only when it is impractical to reduce the noise at source, ear defenders shall be considered.
No person should be exposed to steady noise levels above 115 dB Irrespective of duration, or to impulse
noise levels above 135 dB, with or without ear protection.

9.2) Personal protective equipment

Either one of the following type of ear defenders which is approved to an international safety standard recognized by Kahramaa shall be provided and worn:

- Ear plugs (Rubber or expandable foam)
- Ear defenders
- Helmet mounted ear defenders

9.3) Plant and Equipment

Plant and equipment shall be fitted with manufactures approved noise reduction accessories.
Under no circumstances must noise reduction parts be removed from any plant or equipment.

10) Dust

The need for health surveillance will be dependent upon the type of dust and the amount of dust as identified by hygiene assessments. The commonest dusts which may be encountered within the healthcare setting are:

- Plaster of Paris wood dust building related dusts
- Surveillance will be along similar lines to those out lined for work with respiratory irritants.

Records	Retention Time

Appendix

HSE-M1-P23

Welfare standards

Welfare standards

Department	Document Type	Document Title
HSE	Welfare standards	Welfare standards

Issue Approval	
Prepared By	**Approved By**
Bahaa Eddin Weld Ali *Sr.Safety Engineer*	Dr. Mohammad Al-Sulaity *Manager, HSE*
Signature:	**Signature:**

Issue Record

Issue No.	Date	Reason for re-issuing Procedure
0.0	14/10/2004	First issue of the Procedure.
1.0		
2.0		
3.0		
4.0		
5.0		

Review Frequency : Yearly.

Table of Contents

Contents	Page
Title Page	1
Document Control & Issue Record Page	2
Table of Contents	3
Purpose	4
Scope	4
Responsibilities & Authorities	4
Construction of Buildings	5
Ventilation / Temperature	5
Lighting & Electrical Equipment	5
Water Supply	5-6
Toilet and Washing Facilities	6
Sewage disposal	6
General Requirements	6
Garbage / Refuse	6-7
Pest Control	7
Catering	7
Swimming Pools	7

1. Purpose

Accommodation provided for employees in the fields and remote locations may be permanent, semi permanent or temporary. The information contained in this Part is designed to:

- Protect the health and welfare of employees by maintaining a health living environment free from risk of disease or infection.
- Minimize damage to the environment resulting from disposal of waste products, whether solid or liquid, generated by residential coups.

2. Scope

Ensuring employees are provided with a healthy living environment whilst carrying out their work duties is of particular importance and every effort shall be wade to ensure this is achieved. Also, ensuring that contractors are abiding by the applicable environmental health, house keeping, and sanitation requirement during their work engagement at Kahramaa worksites and facilities

3. Responsibilities & Authorities

Through the implementation of the rules contained in this part, Line Supervisor responsibility is to provide a safe system of work .

4) Construction of Buildings

All structures shall be of sound construction and of suitable materials to be secure, safe and weatherproof.
Internally, walls and ceilings shall be constructed of durable materials and shall have lightly colored, smooth and easy to clean surfaces. The walls to a height of 1.2m in toilet rooms and 1.8m in shower rooms shall be impervious to water.
The floors of service buildings, shower / toilet blocks etc. shall have a smooth but non-slip, durable and easy to clean surfaces.
All openings to the outside shall have tight-fitting, self-closing doors ad glazed windows.
Fly - screen doors may be fitted to kitchen doors or to doors which are used frequently to prevent the entrance of insects and rodents.
No asbestos or paints containing lead shall be utilized in the building construction.

5) Ventilation / Temperature

The temperature in all habitable and other rooms, in which personnel live and work, shall be maintained at a level conductive to the healthful performance of the activity conducted in the area.
All habitable rooms shall be ventilated by means of natural or mechanical ventilation.
All bathrooms, toilet rooms, laundry rooms and similar areas shall be provided with a ventilation system connected directly to the outside.

6) Lighting & Electrical Equipment

The following table lists minimum lighting requirements:

Areas	**LUX required as measured 1.2m above floor**
Hallways	150
Stairways	150
Shower / Toilets Blocks	150
Dining Rooms	200
Kitchens	500
Sleeping Rooms	150
Common Area	150

Effective and suitable provision for emergency lighting, powered by a source independent from that of normal lighting shall be provided to sufficiently illuminate the means of escape.
All circuits serving electrical equipment shall be provided with earth leakage circuit breakers (ELCB) of max. 300 MA tripping leakage current.

7) Water Supply

An adequate supply of potable water shall be provided to the camp or offices which shall conform to the Kahramaa drinking water quality standard.
Potable water shall be distributed in a properly designed and constructed closed system.
Transported water shall be obtained from an acceptable Kahramaa approved source, delivered in a properly designed water tanker used only for this purpose, stored and distributed in an approved manner.
A non-potable water system is permitted only for purposes such as air-conditioning and fire protection. Note non -potable water shall not be used for washing or bathing.

Outlets of non-potable water shall be identified accordingly.
Water should be tested according to the Health, Safety & environment department at Kahramaa.

8) Toilet and Washing Facilities

Toilet and shower rooms shall be conveniently located at distance of not more than 50 m from the furthest habitable room and shall be assessable at all times.
Toilet and shower facilities shall be arranged to ensure privacy of the user. They and the rooms containing them shall be ventilated and lit, and be kept in a clean and orderly condition. Electrical bonding of water pipes in shower rooms and toilet facilities is required.
The number of wash hand basins required is 1 per 10 residents up to 100, ad 1 per 15 thereafter. Washing facilities shall be provided in the immediate vicinity of every sanitary convenience, whether or not provided elsewhere.
The number of toilets and showers required, is a minimum of 1 of each per 10 camp residents.
The number of urinals required is 1 per 25 camp residents.
Hot and cold or a tempered water supply shall be provided to all wash and basins and showers.

9) Sewage disposal

Sewerage will be designed, sized and installed to carry all wash and wastewater, sewage etc. Where a public sewer system is available, all plumbing fixtures & sewers shall be connected to it.
A holding tank may be used with the effluent being trucked to an approved sewage plant. Emptied excess water to the desert from these tanks shall not be permitted.

10) General Requirements

Floor space in sleeping rooms shall be not less than 4.5m^2 per occupant, calculated only where the ceiling height exceeds 2.1 m.
No cooking shall be undertaken in habitable rooms or rooms immediately adjacent to any habitable rooms.
Floors, hallways, walls, ceilings etc. shall be maintained I a sanitary condition. Each room shall be cleaned after each change of occupancy. Common areas shall be cleaned daily.
Hallways, entrance to fire escapes and stairways shall be kept free of obstructions.
Camp evacuation plan and designated assembly points shall be clearly defined and indicated.
Portable fire fighting units together with fire detection requirements as stipulated by the civil defense administration shall be provided in the camp.
Potential hazards on traffic routes used by vehicles shall be provided. Any signs used shall comply with the requirements for Traffic sign and the Highways code as statutorily required.

11) Garbage / Refuse

Wherever practicable, waste shall be segregated into burnable, non-burnable such as glass, plastic, metal etc. and reclaimable materials.

Garbage/refuse storage rooms, areas or enclosures shall be large enough to store the garbage/refuse containers that accumulate between disposal periods. The room shall be insect and rodent proof and shall be clean and maintained in good repair.
All garbage/refuse containers shall be made of durable, non-absorbent, easily cleanable materials that are impervious to insects and rodents. They shall be designed and constructed so that they do not leak and shall be provided with tight-fitting covers that must be kept in the closed position when not in use. Smaller containers shall be lined with heavy – duty plastic bags to minimize cleaning requirements and facilitate easy removal of contents.
Garbage and refuse shall be disposed off more frequently to prevent the development of odor and attraction of insects and rodents.
Garbage and refuse generated by the residents of field areas must be disposed off in the local municipality approved areas only.
Disposal of garbage effuse into open area in the desert shall not be permitted.

12) Pest Control

All buildings, structures and associated facilities shall be insect and rodent proofed, free of vermin before occupancy and shall be maintained free of insect and rodents.
No person shall place, leave, dump or permit to accumulate garbage, refuse or litter in any building or on any premises or
open site, in a manner that will afford food and harborages for insects and rodents.

13) Catering

Food shall be acquired, transported, stored, prepared, served etc. in compliance with the standards as specified in part -25 "catering services" in this manual.

14) Swimming Pools

Swimming pools shall be operated and maintained to meet the optimum requirements of the Kahramaa swimming pool water quality standard.

Attachment A

Kahramaa Drinking Water Quality Standard.

The aim of the standard is to reduce to a minimum those constituents of potable water that are known or suspected to be hazardous to the health and well being of the community.

1.) Bacteriological Quality Standard

Organism	Numbers/100ml

1.1) Treated water entering the distribution system

Faecal coliforms	00
Coliform organisms	00
Faecal streptococci	00

1.2) Potable water in the distribution system

Faecal coliforms	00
Coliform organisms	00
Faecal streptococci	00

1.3) Bottled water

Faecal coliforms	00
Coliform organisms	00
Faecal streptococci	00

A free clorine residual range of 0.2 to 0.5 mg/l (ppm) in the desirable standard for the potable water distribution system to reduce risk of bacterial growth and to provide an indication of the absence of post treatment contamination. This level shall be maintained even at the furthest points of the distribution system.

Attachment-B

Kahramaa Swimming Pool water Quality standard

The aim of the standard is to reduce to an acceptable minimum those constituents of swimming pool water that are known or suspected to e hazardous to the human and / or protect and maintain the beneficial effects to the facility and it users. Optimum range of chemical balance will be considered as the preferred standard.

Constituents (mg/l)	**Optimum Range**	**Minimum Limits**	**Maximum Limits**
Alkalinity	20-80	50	150
Bromine, residual #	1.0-3.0	1.0	3.0
Calcium Hardness	175-225	80	500
Clorine, residual #	0.5-1.5	0.5	1.5
Coliform Organisms	00-01*	00	01*
Copper (cu^{++}) #	0.2 – 0.7	0.05	1.0
Pathogens other than coliform	00 – 01**	00	01**
PH	7.2 – 7.6	7.2	8.2
Sliver $(AG^{+})^{+}$	0.1 -0.2	0.1	0.5
Gross alpha activity	0-0.1 Ba/l	00	@
Gross beta activity	00 – 1.0 BI/L	00	@

Bq /L –Becquerel Per liter

@ -Radioactivity levels must not exceed those of he natural waters of Qatar
# -When used as disinfectants, algaecide or fungicide.
* - Not to exceed one organism in 100 ml. more than 25% samples.
** - Biological indicators not to exceed one in 100 ml. in more than 30% of samples.

Records	Retention Time

Appendix

HSE-M1-P24

Office Safety

Office Safety

Department	Document Type	Document Title
HSE	Office Safety	Office Safety

Issue Approval	
Prepared By	**Approved By**
Bahaa Eddin Weld Ali *Sr.Safety Engineer*	Dr. Mohammad Al-Sulaity *Manager, HSE*
Signature:	**Signature:**

Issue Record

Issue No.	Date	Reason for re-issuing Procedure
0.0	14/10/2004	First issue of the Procedure.
1.0		
2.0		
3.0		
4.0		
5.0		

Review Frequency : Yearly.

Table of Contents

Contents	Page
Title Page	1
Document Control & Issue Record Page	2
Table of Contents	3
Purpose	4
Scope	4
Responsibilities & Authorities	4
Electrical Installations	5
Fire Protection	5
Furnishings and Fittings	5
Maintenance	6
Housekeeping	6
Discipline	6

1. Purpose

The purpose of this part is to highlight some of the risks that can be met and the precautions that will have to be taken to avoid accidents in the offices.

2. Scope

To avoid accidents in the offices, this is achieved through:

- Ensuring employees are provided with a safe and healthful workplace, secure environment, well ventilated work areas and with adequate illumination to ensure a stress free working environment.
- Ensuring employees are well trained in safe office work procedures, have competent and efficient supervision and receive HSE instruction and information relevant to their particular office functions.

3. Responsibilities & Authorities

Both line management and employees have certain duties placed upon them which they shall ensure are fulfilled.

Line Management shall

- Provide methods work that is safe
- Provide methods of working and equipment that are safe.
- Provide training, instruction, information and supervision.
- Provide means of safe handling, storage, use and transportation of equipment, materials and chemicals.
- Provide a safe working environment with good lighting, ventilation, safe passage ways , stairs and corridors.
- Brig to the notice of employees the contents of he corporation health, safety & environmental rules and conditions.

Employees shall

- Protect themselves and Co-workers who may be affected by their actions and behavior.
- Co-operate with line management in complying with Kahramaa HSE requirements.
- Use appropriately any personal protective equipment and / or clothing provided.

4) Electrical Installations

Extension cords shall not be used for any permanently installed office equipment. Where used for temporary installations, extension cords shall be fitted with and independent earth conductor a male plug on one and a female socket on the other.
Routing of such extension cords shall be accordance with workplace activities and kept away from any chemical processes or areas where the cord could be at risk, or cause hazard to personnel.
Leads shall be of a adequate length and routed such that they don not represent a trip hazard to occupants of the office.
Electrically powered equipment shall be switched off and disconnected from the electrical supply prior to any cleaning or adjustment by non - specialized personnel.
A system shall be in place so that all faults such as cracked plugs, frayed or damaged lead or faulty wall sockets are reported immediately by personnel and the equipment not used until repaired competent trained persons shall perform all repairs.

5) Fire Protection

All fire escape routes and exit doors, alarm points, exit signs and fire fighting equipment shall be kept readily accessible and clear of obstructions at al times.
All designated emergency exit doors shall be designed and constructed to open to the outside discharge zone. Designated exit doors must be marked from inside with a PUSH OR PULL signs in Arabic and in English.
Fire wardens and delights shall be appointed for all office buildings in adequate numbers in order to perform their drill and actual emergency duties effectively.
All personnel shall be familiar with the fire emergency and evacuation procedures, alarm systems, available equipment and their responsibilities of this policy, planned fire drill and periodic inspections shall be conducted to ensure this.
All flammable liquids, such ad photocopier toners, cleaning solvents etc shall be stored away from sources of heat and ignition or naked flame, in ventilated metal cabinets. Only quantities in direct use shall be brought into the workplace.
Empty containers and aerosols, which have contained flammable liquids, shall be disposed of forthwith in a secure lidded refuse container.
Displayed " No smoking" signs shall be respected.. Where smoking is permitted, cigarettes and used matches shall be disposed off only in designated ashtrays or sand containers. Ash and cigarette ends shall not be disposed off in office dustbins destined for general office waste disposal.
Appliances such as electric kettles, coffee percolators and electric heating rings are not permitted in normal office space, but shall be confined to designated cooling areas.

6) Furnishings and Fittings

Glass doors and full – length windows shall be fitted with reflective strips at close to eye height. Where the height of storage shelving requires their use, steps or self support
ladders shall be provided. Shelving shall be of a design and strength to carry the intended loads.
Storage cupboards for stationery and other flammable materials shall be metallic and when not in dedicated storage room, fitted with doors.
Loose carpets are not recommended in offices, as they represent a trip hazard.

7) Maintenance

Systems shall be in place to ensure:

- All electrical, fire fighting, lighting, plumbing and ventilation equipment and systems in an office space shall be inspected and maintained on a regular basis.
- All floor coverings, riles, carpets, metal divider or securing trips are regularly inspected and any loose or damaged items replaced or re-secured immediately.
- All workplace furniture is regularly inspected for broken or loose legs, castors, wheels, damaged or cracked Perspex or glass work-surfaces, non-functioning or ill-fitting drawers or doors. Any damaged items shall be replaced for repaired immediately.

8) Housekeeping

Good house keeping in the office environment shall be considered one of the primary defenses against accidents and injuries in the workplace, and therefore is the responsibility of all personal.
All passageways, exits, fire doors, break glass alarm points, fire fighting equipment, first aid stations and other emergency stations shall be kept clean and unobstructed at all times.
Adequate numbers of first aid kits with adequate supplies must be maintained appropriately and checked after each use routinely.

All small items such as waste paper bins, plant containers, etc. shall be positioned such that they do not represent a trip hazard.
Cabinet doors and file drawers shall be kept closed when not in use. When working with a filing cabinet, only one drawer at a time shall be opened.
Cabinets and shelving shall be loaded from bottom shelf upwards, and heavy items placed as low as possible. Al no time shall heavy or sharp objects be stored above eye level.
Cupboards and filling cabinets shall not have items indiscriminately stored on top of them.
Offices shall be regularly tidied and cleaned, wastepaper bins regularly emptied and recycling containers and floors regularly vacuum cleaned.
Laser printer cartridge, batteries, copiers toner and other cleaning solvents shall be disposed off and recycled as appropriate.

9) Discipline

Horseplay of any kind and any form of immodest behavior shall prohibited in the workplace.
Employees shall refrain form the following:

- Running in corridors.
- Pushing or crowding in entrances or stairways
- Standing in front of closed doors.
- Entering or exiting a room or building by any means other than the approved access routes or doors.

Records	Retention Time

Appendix

HSE-M1-P25

Catering Services

Catering Services

Department	Document Type	Document Title
HSE	Catering Services	Catering Services

Issue Approval	
Prepared By	**Approved By**
Bahaa Eddin Weld Ali *Sr.Safety Engineer*	Dr. Mohammad Al-Sulaity *Manager, HSE*
Signature:	**Signature:**

Issue Record

Issue No.	Date	Reason for re-issuing Procedure.
0.0	14/10/2004	First issue of the Procedure.
1.0		
2.0		
3.0		
4.0		
5.0		

Review Frequency : Yearly.

Table of Contents

Contents	Page
Title Page	1
Document Control & Issue Record Page	2
Table of Contents	3
Purpose	4
SCOPE	4
RESPONIBILITIES & AUTHORITIES	4
Construction & fittings	5
Lighting and electrical Equipment	5
Ventilation	5
Water supply	5
Food Handlers	5-6
Food Handling & Quality	6
Equipment & Surfaces	6
Equipment & Utensil Washing	6
Washing & Toilets Facilities	7
Smoking	7
Sewage Disposal	7
Refuse segregation, storage & disposal	7
Pest Control	8

1. Purpose

The purpose of this part is to ensure that the health and welfare of individuals who consume food produced, processed, prepared or otherwise handled by any food facility operated, contracted by or on behalf of Kahramaa is protected.

2. Scope

Food poisoning and food-borne diseases are probably the most common causes of illness. Whilst deaths from such illnesses are rare, symptoms can be unpleasant and may result in lost man-hours and affect critical business areas with lost production

3. Responsibilities & Authorities

Both line management and employees have certain duties placed upon them which they shall ensure are fulfilled.

4) Construction & fittings

The floors, walls and ceilings of all food premises shall be constructed of smooth impervious, durable, light coloured and easily cleanable materials that shall be maintained in a clean condition and good repair.
No asbestos or paints containing lead shall be utilized in the buildings construction.
Trapped floor drains shall be provided in floors that are water flushed for cleaning or that receive discharges of water or other fluid waste form equipment.
All fixtures attached to walls and ceilings shall be installed in such a way that does not obstruct or prevent cleaning and shall be easily cleanable and shall be maintained in good repair.
Kitchen and dining areas shall be air conditioned.
An insect-o-cutter shall be installed at the entrance to the kitchen to prevent flies, insects, etc. in the area.

5) Lighting and electrical Equipment

The lighting level shall be a minimum of 500 lux at all work surfaces in all rooms in which food is processed, prepared, served or stored, or in which equipment and utensils are washed. Emergency escape routes shall be clearly marked with appropriate signs and illuminated with emergency lighting.
All circuits serving electrical equipment shall be provided with earth leakage circuit breakers (ELCB) of max 300 MA tripping leakage current.

6) Ventilation

All rooms shall be provided with extraction fans providing adequate ventilation to keep them free of excessive heat, steam, condensation, vapours and fumes.

7) Water supply

Water shall be obtained, conveyed, treated, stored and distributed in a closed system. Only wholesome water conforming to the Kahramaa standard on drinking water Quality shall be sued in food premises see HSE Manual part **23** attachment(A) if a municipal; water supply is not available then transported water shall be obtained from an kahramaa approved dedicated water tanker, used for no other purposes, and contain a free chlorine residual of 0.5 mg/l (PPM).

8) Food Handlers

All food handlers shall be adequately trained on their specific duties and must possess a valid health certification. This requires health screening for hepatitis 'B' and 'C' nee employees shall be under the direct supervision of an experienced worker for an allocated period of time, as determined, before they resume full responsibility.
Food handlers shall be provided with catering uniforms that shall be regularly changed and cleaned.
Food handlers have a clean and presentable appearance that includes short hair and clean short nails.
No person shall work in a food establishment if he is infected with a disease in a communicable form, if he is a carrier of organisms that can cause a communicable disease, afflicted with a boil, infected cut or wound, or an acute respiratory infection.
All employees upon return form vacation shall undergo a medical examination, which shall include screening for hepatitis 'B' and 'C' prior to reporting to duty.

9) Food Handling & Quality

At al times during storage, preparation, display, transportation and serving, food shall be protected from contamination. Food handlers shall wear catering gloves whilst preparing or serving food. Food will be prepared, displayed and served with the least possible manual contact, with suitable utensils and on surfaces that have been cleaned and sanitized prior to use. Raw vegetables shall be washed thoroughly before being cooked. Those served raw shall be sanitized in a solution containing 50 – 100 mg/l (50-100 PPM) chlorine with a minimum contact time of 10 minutes.
The temperature of potentially hazardous foods shall be 7°c or below when refrigerated – 18°C or below when frozen and 63°C or above when in hot storage.
Wherever possible, hazardous food shall be thawed in refrigerated units so that the temperature of the food does not exceed 7° C.

10) Equipment & Surfaces

Equipment and utensils shall be made of and repaired with safe materials. They shall be corrosion resistant, non-absorbent, smooth, easily cleanable and durable and stored in sealed cupboards to prevent the ingress of dust etc.
Food contact surfaces shall be easily cleanable, smooth, free of breaks, open seams, cracks or other imperfections.
Floor mounted equipment, unless readily movable, shall be sealed to the floor or installed on raised platforms to facilitate cleaning.
Kitchenware and food contact surfaces shall be cleaned and sanitized after each use.
Cutting boards shall be sanitized by immersing in a 100 mg/l (PPM) chlorine solution overnight every night or by an alternative method, which must be shown to be as efficient.
Non-food contact surfaces of equipment shall be cleaned as often as necessary to keep equipment free of dirt and food debris.

11) Equipment & Utensil Washing

A sink shall be used to manually clean and sanitize submersible equipment or parts thereof and utensils. Sinks shall be large enough to permit complete immersion. Sinks shall have hot and cold running water.
Equipment and utensils shall be thoroughly washed in hot clean water containing a liquid detergent, at a minimum 50°c. They shall then be rinsed free of detergent.
After washing and rinsing, equipment and utensils shall be sanitized by means of soaking in hot water of 28°C for one minute or by means of immersion in hot water of 50°c Containing 50 PPM free available chlorine for a period of 5 minutes.
Dish washing machines shall be installed and maintained according to manufacturer's instructions and kept in good repair. Automatic detergent dispensers and wetting and maintained. After cleaning, all equipment and utensils shall be stored off the floor and allowed to air dry.

12) Washing & Toilets Facilities

Wash hand basins shall be located to permit convenient use by all employees. Sinks used for food preparation shall not be used for hand washing. Each wash hand basin shall be

provided with hot and cold running water, liquid hand cleaning detergent and a supply of disposable towels or an operational hand-drying device.
Toilets shall be conveniently located, of sufficient number and accessible at all times. Toilet facilities shall be kept clean and in good repair. No food, Equipment or utensils shall be stored in toilet rooms.

13) Smoking

Food handlers shall not engage in smoking while on duty and smoking is prohibited in all food rooms restaurants and messes. Rest areas may be provided for the benefit of smokers, but must take into consideration suitable extraction fan/ventilation arrangements to protect non-smokers from discomfort caused by passive smoking.

14) Sewage Disposal

Sewerage will be designed, sized and installed to carry all wash and wastewater, sewage etc. Where a public sewer system is available, all plumbing fixtures and sewers shall be connected to it.
Sewage shall be collected and treated prior to disposal. In no case shall sewage or liquid waste of any type be discharged until it has been properly treated.
If conditions are not suitable for provisions of a treatment. If conditions are not suitable for provisions of a treatment system, a holding tank may be used with the effluent being trucked to an approved sewage treatment plant.
Where a treatment system cannot provided, mobile treatment facilities shall be considered wherever possible.

15) Refuse segregation, storage & disposal

Wherever practicable waste shall be segregated into burnable, non-burnable such as glass, plastic, metal etc. and reclaimable materials.
Prior to removal from premises al refuse shall be stored in a manner that make it inaccessible to insects and rodents.
Refuse storage rooms. If used, shall be constructed of easily cleanable, non-absorbent materials, and be insect and rodent proof.
A facility shall be provided for cleaning refuse containers after they are emptied.
Refuse shall be kept in durable insect and rodent proof containers that do not leak and be provided with tightly fitting covers.
Refuse shall be disposed of often enough to prevent the development of odors and the attraction of rodents and insects.
Where waste refuse is burned on the premises, it shall be done by controlled incineration.
It is strictly prohibited to dispose of refuse into an open desert area. It shall be taken to an approved disposal area.

16) Pest Control

Effective measures intended to prevent the entrance and harborage of and /or eliminate the presence of, insects and rodents shall be utilized.
An adequate number of insect – o – cutter (ultra Violet – flying insect eradicators) Shall be fitted in all kitchen and dining areas.

Records	Retention Time

Appendix

HSE-M1-P26

HEALTH, SAFTEY & ENVIRONMENTAL Rules AND CONDITIONS FOR CONTRACTORS

HEALTH, SAFTEY & ENVIRONMENTAL Rules AND CONDITIONS FOR CONTRACTORS

Department	Document Type	Document Title
HSE	HEALTH, SAFTEY & ENVIRONMENTAL RULES AND CONDITIONS FOR CONTRACTORS	HEALTH, SAFTEY & ENVIRONMENTAL RULES AND CONDITIONS FOR CONTRACTORS

Issue Approval	
Prepared By	**Approved By**
Bahaa Eddin Weld Ali *Sr.Safety Engineer*	Dr. Mohammad Al-Sulaity *Manager, HSE*
Signature:	**Signature:**

Issue Record

Issue No.	Date	Reason for re-issuing Procedure
0.0	14/10/2004	First issue of the Procedure.
1.0		
2.0		
3.0		
4.0		
5.0		

Review Frequency : Yearly.

Table of Contents

Contents	Page
Title Page	1
Document Control & Issue Record Page	2
Table of Contents	3
Purpose	4
Scope	4
Responsibilities & Authorities	4
Kahramaa Health, Safety & Environment policy	5
CONTACTOR HEALTH, SAFETY &ENVIRONMENTAL (HSE) POLICY	6
CONTRACTOR HEALTH, SAFETY & ENVIRONMETAL (HSE) PLAN	6
COMPLIANCE WITH STATUTORY REGULATIONS	6
COMPLIANCE WITH KAHRAMAA RULES AND CONDITIONS	6
CERTIFICATION OF EQUIPMENT	6
SITE ENTRY	6
OPERATION OF VEHICLES	6-7
QUALIFICATIONS AND TRAINING OF PERSONNEL	7
EMPLOYEE DETAILS	7
PERSONAL PROTECTIVE EQUIPMENT	7
OCCUPATIONAL HEALTH AND HYGIENE	8
FIRE SAFETY	8
PERMIT TO WORK SYSTEM	8
ENVIRONMENTAL PROTECTION AND WASTE DISPOSAL	8
STOPPING OF WORK AND PROHIBITION OF UNSAFE PRACTICES AND ENVIRONMENTAL DAMAGING ACTS	8
INCIDENT AND HSE STATISTIC REPORTING	8-9
EMERGENCY RESPONSE	9
AUDIT, MONITORING AND INSPECTION	9
HEALTH, SAFETY & ENVIRONMENTAL MEETINGS/ INFORMATION	9

1. Purpose

The purpose of this Part to ensure the health and safety of contractor employees; and the contractor commitment to protecting environment.

2. Scope

The outlines of this part for contractors to comply with Kahramaa requirements for the duration of the contract.

3. Responsibilities & Authorities

The Line Supervisor in conjunction with the HSE department, appraise a contractors HSE performance.

1) Kahramaa Health, Safety & Environment policy

It is the policy of (Kahramaa) to conduct its activities with employees, contractors, and others associated, in such a way so as to give proper regard and foremost account to the health and safety of it's employees and to the conservation of the environment in all its operational areas.

Kahramaa will strive to prevent all accident, injuries and occupational illness and will make continuous efforts to protect the environment, through the active participation of every employee and contractor.

Kahramaa believes that good HSE performance is an integral part of its business and will treat HSE issues in the same way as other primary business objectives.

Kahramaa will on General HSE Aspects :

- Comply with or exceed all applicable laws and regulation and apply internationally recognized standards where local laws and regulations do not exist.
- Hold all levels of management, supervision and staff as line accountable for HSE issues and for the development of positive attitudes in themselves and those they supervise.
- Require contactors to apply HSE standard and practices compatible with our own.
- Undertake appropriate reviews and evaluations to measure HSE and identified standards and to ensure compliance with this policy.
- Provide appropriate HSE training to employees .
- Develop and maintain HSE emergency procedures in co-operation, when necessary with other operating companies, the local authorities and emergency services.

***ON HEALTH**

- Conduct activities in such a way as to avoid harm to the health of employees, contractors and those living in close proximity to the operation.
- Promote, as appropriate, the health of employees, both Kahramaa and contractors.

***ON SAFETY**

- Design facilities, establish practices, provide training and conduct operations in a manner that minimizes risks and hazards to workers, property and the communities in which it operates, consistent with best practices of the industry.

***ON ENVIRONMENT**

- Comply with all Rules and Regulations.
- Strive to progressively reduce emissions, discharges and wastes.
- Minimize the impact of our activities on the environment.
- Preserve sites of archaeological and historical interest in our areas of operation.
- Continuously improve the efficient use of energy and natural resources.

2) CONTACTOR HEALTH, SAFETY & ENVIRONMENTAL (HSE) POLICY

The contactor shall issue an HSE policy statement to Kahramaa's representative, which shall be dated and signed by the contactor's most senior representative.

The contractor shall bring this policy statement to the attention of all his personnel.

3) CONTRACTOR HEALTH, SAFETY & ENVIRONMETAL (HSE) PLAN

The contractor shall develop an HSE plan for the duration of the contract and shall provide the HSE plan to Kahramaa's representative in his bid package.

4) COMPLIANCE WITH STATUTORY REGULATIONS

The contractor shall carry out his work in accordance with statutory legislation including but limited to:

QATAR Labor Law No. 14 / 2004

5) COMPLIANCE WITH KAHRAMAA RULES AND CONDITIONS

The contractor shall at all time carry out his work in accordance with safety, environmental and loss prevention rules and condition in the attached appendices. The contractor shall ensure that all personnel under his control are aware of and follow the said rules and condition.

6) CERTIFICATION OF EQUIPMEN

The contactor shall ensure that all lifting tackle, lifting appliances, mobile work platforms and hoists under his control are in possession of current up-to-date certification to British standard specification or equivalent.

7) SITE ENTRY

The contractor shall obtain written permission from Kahramaa before the contractor starts work on site and before the contractor arranges for deliveries prior to work commencing.
The contractor's employees shall possess a valid security pass at all times while they are on Kahramaa premises.
The contractor's employees shall at all times act in a courteous manner when dealing with site security and shall cooperate fully with any instructions given to them.
Site security has the right to prevent entry/exit to the contractor's employees and if deemed necessary may confiscate the individual's security pass.

8) OPERATION OF VEHICLES

KAHRAMAA will not tolerate breaches of statutory or Kahramaa safe driving rules and as such any willful violations by the contractors personnel whilst on Kahramaa premises or on Kahramaa related business will result in Kahramaa having the right to require the immediate removal of any negligent driver and replacement with another person acceptable to Kahramaa.

9) QUALIFICATIONS AND TRAINING OF PERSONNEL

The contractor shall ensure that all personnel under his control regardless of position are given a HSE induction prior to arrival on site, and on arrival, a job orientation course. In particular, contractor drivers shall receive "Drivers Orientation" prior to commencing the driving cycle. The content of the HSE induction and the job orientation shall be approved by the Kahramaa's representative before being taken into use.
The contactor shall ensure that all personnel under his control regardless of position are given HSE training as specified by the Kahramaa representative.
The contractor shall ensure that all personnel are also trained is both general awareness of environmental issues and specific procedures aimed at avoidance of environmental damage.
The contractor shall submit to the Kahramaa representative an HSE training programmer for his personnel (including drivers) for the duration of the contract.
The contractor shall provide documented evidence of all HSE training and instruction given to personnel under his control to the Kahramaa representative, together with practical demonstrations of such training if requested.
The contractor shall ensure that all personnel are qualified in the particular job that they are performing and undergo further training to meet the needs of the working environment when specified by Kahramaa's representative.
The contractor shall provide copies of all qualification for personnel under his control prior to arrival on Kahramaa premises and shall if required by Kahramaa's representative, release his personnel at the contractor's expense to sit an examination to determine his competency.

10) EMPLOYEE DETAILS

The contractor shall provide to the Kahramaa representative prior to arrival on Kahramaa premises, a 24-hour contact facility in the event of an emergency.
In addition to the above, the contractor shall maintain a register of employee's next of kin details, which shall be made available to the Kahramaa representative upon his request.

11) PERSONAL PROTECTIVE EQUIPMENT

The contractor shall provide free of charge all personnel under his control with personal protective clothing and equipment, as required in connection with the safe performance of the work, which shall be maintained in good condition or replaced.
The contractor shall provide Kahramaa's representative with a list showing disciplines of employees under his control and personal protective equipment (PPE) identified, for review and approval prior to the contractor arriving on site.
The contractor shall ensure that all personal protective equipment under his control conforms to the Kahramaa Health, Safety & Environment Department specification and shall provide copies of the equipment literature to Kahramaa's representative for approval.

12) OCCUPATIONAL HEALTH AND HYGIENE

The contractor shall ensure that all necessary arrangements have been made to identify any hazardous exposures to his employees and that precautionary measures have been taken to protect personnel and the workplace.

Medical examinations for employees shall be provided by the contractor at the period specified in accordance with the " Qatar Ministry of Health Regulations".

13) FIRE SAFETY

The contractor's employees shall receive training in what to do in the event of fire and specialist staff will be nominated and trained to enable them to carry out specific function during an emergency evacuation. Information on instructions, training and identity of specialist staff will be disseminated to everyone throughout the organization by various communication means already mentioned.
The contractor shall provide fire extinguishers at all time and it should be maintained every six month.
The contractor shall ensure that all drawing, material and specification for fire fighting and alarm systems to be submitted for approval to Health, Safety & Environment Department.

14) PERMIT TO WORK SYSTEM

Kahramaa operates a "Permit to Work System "(PTW), which the contractor shall adhere to fully.
The contractor shall ensure that all personnel who are required to work under the Kahramaa Permit to Work system, undergo Permit To Work training performed by Kahramaa, prior to commencing work.
The contractor shall ensure that personnel are told of and understand the Kahramaa Permit to Work system and other arrangements that apply to the particular locations at which their personnel are to work.

15) ENVIRONMENTAL PROTECTION AND WASTE DISPOSAL

The contractor shall pay due regard to the environment by preserving air, water, soil, animal and plant life from adverse effects of the contractor's activities and shall provide to the Kahramaa representative the company Environmental Policy and detailed procedures for protecting and monitoring the environment.

16) STOPPING OF WORK AND PROHIBITION OF UNSAFE PRACTICES AND ENVIRONMENTAL DAMAGING ACTS

Kahramaa's representative shall have the right to suspend work being performed by the contractor at any time, if the Kahramaa representative deems that the contractor has or is about to violate statutory or Kahramaa health, safety or environmental rules and regulation. The cost of such stoppages of work in this regard will be borne by the contractor.

17) INCIDENT AND HSE STATISTIC REPORTING

The contractor shall promptly provide notification to the Kahramaa representative of any incidents that occur at the work-site of employees who have assigned duties on Kahramaa premises, regardless of their location at the time of such accident, in line with the Kahramaa procedure for the investigation and follow-up of incidents.

18) EMERGENCY RESPONSE

The contactor shall comply with Kahramaa Emergency procedures. The contractor may be requested during executing his work within Kahramaa premises and facilities to clear his equipment and employees from the scene of emergency event for his safety, and to avoid hindering rescue emergency activities.
The contactor shall be requested to attend training, drills or scenarios intended to be carried out in his area of work after liaison with the contractor administrator.

19) AUDIT, MONITORING AND INSPECTION

The contractor shall carry out regular inspection at no longer than seven-day interval, to cover his worksite. Copies of inspection reports shall be submitted to the Kahramaa representative. The contractor shall also carry out planned audits to review safety management and procedural aspects of his operation.
The contactor shall develop an annual HSE audit and inspection plan /schedule and shall also ensure an effective system is in place for monitoring the follow-up and implementation of inspection and audit action.
Kahramaa shall have right at any time to audit /inspect the contractor's facilities, procedures and safety management system. The contractor shall fully co-operate in such reviews and shall implement recommendation at his own cost where Kahramaa or statutory rules and regulations are contravened.

20) HEALTH, SAFETY & ENVIRONMENTAL MEETINGS/ INFORMATION

The contractor shall provide the Kahramaa representative with a plan showing the frequency of HSE meeting within its own organization, shall invite the Kahramaa representative to attend and shall provide copies of HSE minutes of meeting.
The contractor shall provide Kahramaa with a flowchart showing the flow of HSE information to all employees under his control and provide copies of such information to the Kahramaa representative when distributed.
The senior contactor representative on site or his immediate superior in his organization shall attend and actively participate in the Kahramaa contractors HSE meetings.

Records	Retention Time

Appendix

Qatar General Electricity & Water Corporation

SAFETY RULES

For the Control, Operation and Maintenance of the High Voltage Systems

First Edition 2005

Mogali

QATAR GENERAL ELECTRICITY & WATER CORPORATION
(KAHRAMAA)
STATE OF QATAR

SAFETY RULES

For the Control, Operation and Maintenance of the High Voltage System of the QATAR GENERAL ELECTRICITY & WATER CORPORATION (KAHRAMAA)

First Edition
2005

QATAR GENERAL ELECTRICITY & WATER CORPORATION
(KAHRAMAA)
STATE OF QATAR

SAFETY RULES

For the Control, Operation and Maintenance of the High Voltage System of the QATAR GENERAL ELECTRICITY & WATER CORPORATION (KAHRAMAA)

1st. General
2nd. Operating Rules
3rd. Safety Rules

OGEWC (KAHRA MAA) First Edition
(Modified edition of 1993 issued by Ministry of Electricity & Water)

Issue to .....(signed)
..... (date)

Serial No.....

QATAR GENERAL ELECTRICITY & WATER CORPORATION
(KAHRAMAA)
STATE OF QATAR

SAFETY RULES

For the Control, Operation and Maintenance of the High Voltage System of the QATAR GENERAL ELECTRICITY & WATER CORPORATION (KAHRAMAA)

1st. General
2nd. Operating Rules
3rd. Safety Rules

OGEWC (KAHRA MAA) First Edition
(Modified edition of 1993 issued by Ministry of Electricity & Water)

Issue to .....(signed)
..... (date)

Serial No.....

QATAR GENERAL ELECTRICITY & WATER CORPORATION
(KAHRAMAA)

SAFETY RULES

INDEX

A. General

1. Admission to Generating Stations, Switching Stations & Substations.
2. Duties of Employees & Others.
3. Issue of Copy of Safety Rules & Regulations.
4. Variation of Rules.
5. Definitions.

B. Operating Procedures

6. Switching
7. Earthing
8. Loading Instructions to Generating Stations
9. Telephone & Radio / GSM Messages.
10. Failure of Supply.
11. Dangerous Occurrences & Accidents.

C. Safety Rules

12. General Safety Precautions
13. Access to High Voltage Enclosures & Apparatus
14. Earthing
15. Permit-to-Work and Sanction for Test
16. Limitation of Access
17. Work in Substations / Switching Stations Containing Exposed Live Conductors.
18. Work on Remotely or Automatically Controlled Equipment
19. Work on High Voltage Apparatus other than Metal-Clad Switch gear Spouts, Cables or Overhead Lines.
20. Work on Metal-Clad Switchgear Spouts.
21. Work on High Voltage Cables & Overhead Lines.
22. Testing of High Voltage Apparatus.
23. Work on High Voltage Equipment & Ancillary Apparatus containing Sulphur Hexaflouride (SF6) Gas or Vacuum.
24. Work on High Voltage Equipment Operated by or Containing Compressed Air.
25. Work on Oil Tanks.
26. Fire Protection Equipment.
27. Rules for work on Medium & Low Voltage Apparatus, Conductors & Equipment.

REVISIONS

Each revision to the Safety Rules will be numbered and this table is provided so that you can record the revisions as they are received and fixed in your copy of the Rules. This will enable you to keep your copy up to date.

Revision No.	Rule No.	Page No.	Received Date

QATAR GENERAL ELECTRICITY & WATER CORPORATION
(KAHRAMAA)
STATE OF QATAR

SAFETY RULES

For the Control, Operation & Maintenance of the QGEWC's Extra High, High, Medium & Low Voltage Systems.

Preamble:

The following Rules for the Control, Operation and Maintenance of the QGEWC's High Voltage System are designed for the protection of the QGEWC's employees and others against injury in the course of their duties and to ensure the safe and efficient operation of the QGEWC's equipment.

The Rules must be strictly observed by all persons to whom this book is issued, and ignorance of them will not be accepted as an excuse for negligence of duty.

Any person who may have to operate the QGEWC's High-Voltage equipment shall be required to satisfy the Authorization Committee of QGEWC as to their adequate knowledge and understanding of Safety Rules and Regulations, code of practice, System Operation procedures and rules in so far, as they may be applicable to their jobs.

Any person in doubt as to the interpretation or application of these rules should refer to the Manager of his Department.

ESSA HILAL AL KAWARI
Director
Electricity Networks Affairs

Date November 2004

A. General

1. Admission to Generating Stations, Switching Stations and Substations :

No person shall enter any Generating Station, Switching Station or Substation wholly or partly occupied or owned by the QGEWC without the written permission of QGEWC's concerned Authority.

1.1 QGEWC:

Where 'QGEWC' is used in this Rules, it refers to **Qatar General Electricity & Water Corporation (KAHRAMAA).**

1.2 Safety Rules :

Where 'Safety Rules' is used in this Rules, it refers to Safety Rules for the Control, Operation and Maintenance of QGEWC's Extra High Voltage and High Voltage systems, unless otherwise specified.

1.2.a Policy :

QGEWC has prepared the Safety Policy Statement under the followings :

(i) Comprehensive Safety Rules, Procedures and Code of Practice relating to particular activities are issued or will be issued for general application in QGEWC networks. These policy documents must be observed by all the staff and by the Contractor's representative working at QGEWC sites.

(ii) In designated areas of particular hazard, competent persons who have authorization will be required to satisfy themselves that all necessary safety precautions have been carried out before authorizing the commencement of work.

1.3 "Shall" :

Where 'shall' is used in this Rules with no qualification, it will indicate a **mandatory requirement with no discretion permitted and no judgement to be made.**

1.4 "Shall, where practicable" :

Where "Shall" is qualified only by the word "practicable", a slightly strict standard is imposed. It means that where it is possible to achieve in the light of current knowledge and invention, but bearing in mind that the hazards associated with work to be undertaken, then the requirement must be met. One is not allowed to avoid the requirement on the grounds of difficulty, inconvenience or cost.

2. Duties of Employees & Others :

The Rules must be familiar to all employees who may be concerned with the QGEWC's High Voltage equipment and must be strictly observed. Employees of Contractors and others having occasion to operate or work on the QGEWC's equipment are also required to be familiar with these Rules and to observe them.

2.1 General Safety :

In addition to the Safety Rules / requirements specified in the Safety Rules for the Control, Operation and Maintenance of the high voltage system of QGEWC, for establishing safety of the system, the safety procedures at work shall also be achieved by maintaining general safety all the times, at and in the vicinity of the place of work. Before work or testing commences, it is the personal responsibility of the appropriate supervisor to satisfy himself that the Safety precautions are taken to establish General Safety at and in the vicinity of the work place. Subsequent to the commencement of work or testing, the person in charge of the work or testing shall continue to maintain conditions which ensure General Safety. This person shall also ensure that conditions of other work areas are not adversely affected by the activities for which he is responsible.

2.2 Additional Safety Rules, Code of Practice and Procedures :

In addition to the Safety Rules for the Control, Operation and Maintenance of the high voltage system, other associated Rules issued from time to time by QGEWC like Grid Code etc. shall be complied with.

2.3 Additional and Specified Instruction :

Additional instructions, like System Operation Memorandum (S. O. M.) explaining or adding to the Safety Rules are considered part of Safety Rules. Working on or testing of plants and apparatus to which these Rules can't be applied / or for a special reason should not be applied, should be carried out in an approved manner which shall be confirmed in writing. Approval shall be in writing by the Director, ENA or by his deputy authorized by the Director, ENA

3. Issue of copy of Safety Rules & Regulations :

(a) A copy of these Rules shall be supplied to all persons concerned with the control, operation or maintenance of the QGEWC's High Voltage equipment and each recipient shall sign a receipt for his copy which shall be kept as record at National Control Center.

(b) A copy of the Rules shall be kept available for reference at the Control Centers and all primary substations at which the QGEWC's high voltage equipment is installed.

4. Variation of Rules:

In exceptional circumstances these rules may be varied to such extent as may be authorized in writing by the QGEWC's Director Electricity Networks Affairs or his deputy authorized by him in writing to do so.

5. Definitions :

Additional Earth - An earth connection of approved type which is

applied after the issue of a Permit-to-Work or Sanction-for-Test (for example an earth applied at the point of work) and qouted as additional earth in the Permit-to-Work or Sanction for Test Card. This can be removed while the safety Document is in-force, without intimating System Control.

Apparatus -

Extra High Voltage Any apparatus, equipment and conductors which are normally operated at a voltage exceeding 66 KV and above._

High Voltage Apparatus Any apparatus, equipment and conductors which are normally operated at a voltage exceeding 1000 volts (to check IEC & other standard).

Medium Voltage Apparatus Any apparatus, equipment and conductors which are normally operated at a voltage exceeding 250 Volts but not exceeding 1000 Volts.

Low Voltage Apparatus Any apparatus, equipment and conductors which are normally operated at a voltage not exceeding 250 volts.

Approved Sanctioned by the Director Electricity Networks Affairs or by his authorized deputy in writing.

Authorized Person A competent person appointed in writing by the Director Electricity Networks Affairs to carry out specific operations and work on the QGEWC's system in accordance with his certificate of authorization.

Caution Notice A portable notice in approved form attached to apparatus or its control equipment, conveying a warning against interference with the apparatus.

Certificate of Authorization A certificate given to a competent person confirming that he has proved himself capable of carrying out the duties he is expected to perform and defining the limits of his authorization.

Circuit Main Earth (CME) An approved earth connection which is applied as per the instruction of the system control Engineer before

the issue of a Permit-to-Work or Sanction-for-Test and quoted in the Permit-to-Work or Sanction for Test as CME.

Competent Person A person over 21 years of age, who has sufficient technical knowledge and experience to enable to avoid danger to self or any employee or damage to QGEWC's property.

Contractor Representative A person, other than a person employed by QGEWC who is required to work on high voltage system on or in the vicinity.

Danger A risk of loss of life, bodily injury or damage to health from shock, burn or other cause arising from the Generation, Transmission, Distribution or use of electrical energy.

Danger Notice A portable notice, in approved form, attached to apparatus when 'LIVE', calling attention to the danger of approach to, or interference with, the apparatus.

Dead At or about zero potential with respect to earth and disconnected from all live system.

Earthed Connected to the general mass of earth in such a way as to ensure an immediate discharge of electrical energy without danger.

Limitation of Access A form signed and issued by an Authorized Person to a Competent Person in charge of work other than work on high voltage apparatus defining the limit of the area within which the work is to be carried out.

Live Electrically charged.

Permit-to Work - A form of declaration signed and issued by a Senior Authorized Person to a Competent person, in charge of work to be carried out on high voltage apparatus, for the purpose of making known to that person exactly what apparatus is dead, **isolated** from all points of supply and feed back, and connected to earth, and on which it is safe to work. A Permit-to-Work may also be issued to a Competent person in charge of work above ground level in proximity to live high voltage apparatus.

Sanction-for-Test - A form of declaration signed and issued by a Senior Authorized Person to a Senior Authorized Person in charge of testing of high voltage apparatus for the purpose of making known to such person, exactly, what apparatus is dead, isolated from all points of supply & feed back and connected to earth on which it is safe to carry out the test and what apparatus is to be tested and the condition under which testing is to be carried out.

Senior Authorized Person - An authorized person whose letter of authorization permits such person to issue and cancel Permit-to-Work and Sanction-for-Test cards. He is authorized to carry out switching / operation on QGEWC's EHV, HV apparatus / equipment.

Switching - The operation of switch gears and isolators and other methods of making or breaking a circuit.

System Control Engineer - An Engineer appointed by the QGEWC, whose duties are to ensure the implementation of Safety Rules and check for maximum safety at all times to personnel and equipment on the QGEWC's system and who is on duty for the purpose of controlling Generation Transmission and Distribution of Electricity within the State.

Working Party - Persons working under the immediate supervision of a Competent Person or Authorized Person.

B. Operating Procedures

6. Switching :

6.1 Operation of Circuit Breakers and Isolators :

6.1.a No high voltage switching or associated operations shall be carried out without the permission of the System Control Engineer except in cases of emergency and immediate danger to persons or apparatus.

6.1.b When the System Control Engineer requires high Voltage switching to be carried out, he shall communicate directly with the authorized person who is to carry out the switching. In the absence or failure of direct communication facilities, the message may be relayed by a competent third party, Rule 9 being observed.

6.1.c Switching or operations to the System Control Engineer's instruction, or with his consent, shall be carried out without undue delay and all switching or operations, whether to the System Control Engineer's instruction or with his consent, or when there is immediate danger to life or equipment, shall be reported to the System Control Engineer as soon as possible after each operation. The circumstances of an occurrence necessitating any emergency switching shall be reported immediately after the operation.

6.1.d Should any equipment show signs of distress or faulty operation, the circumstances shall be reported immediately to the System Control Engineer and the equipment shall be examined before further operation.

6.1.e When any person receives instructions regarding work on or the operation of high voltage apparatus, he shall report any objection to the carrying out of the instructions to the System Control Engineer who shall then have the matter investigated and if necessary, referred to higher authority by the concerned.

6.2 Recording of Switching :

A record of all high-voltage switching and relay operations shall be entered appropriately in the station Log. The System Control Engineer shall record in his Log, the time and particulars of all high-voltage switching carried out to his instructions or his consent.

Also all relay operations must be logged with the appropriate action taken thereon.

7. Earthing :

7.1 Circuit Main Earths (CME) :

No high-voltage earthing switch shall be operated or Circuit Main Earth (CME) connection attached or moved except on the instruction of, or with the consent of, the System Control Engineer, by a Senior Authorized Person or a Competent Person acting under his immediate and direct supervision. Each operation shall be reported to the System Control Engineer as soon as possible after completion, where the location of each connection to earth must be recorded on the Permit-to-Work or Sanction-for-Test card.

7.2 Recording of Earthing :

The System Control Engineer shall record in his Log Book the time of application and the location of all Circuit Main Earth (CME) connections and the time of their removal.

8. Loading Instructions to Generating Stations :

8.1 Load Allocation :

8.1.a The allocation of load to the GENERATING STATIONS / units (manual/AGC) is the responsibility of the System Control Engineer and will be varied by him from time to time as required by system condition, as stipulated in Grid Code.

8.1.b The out put of any privately owned Generating Plant with whom QGEWC has entered into an agreement, will also be supervised and controlled by the System Control Engineer to the extent stipulated by the relevant agreement.

8.1.c Any person receiving instructions from the System Control Engineer regarding station loading, voltage

adjustment, frequency control and associated matters shall carry out the instructions without undue delay and where necessary shall report the completion of the operations to the System Control Engineer.

8.1.d Where there is any objection to, or difficulty in carrying out the System Control Engineer's instructions, he shall be notified of the circumstances and will then investigate the matter, referring if necessary to higher authority.

8.2 Recording of Loading Instructions :

The System Control Engineer shall record in his Log the time and nature of all loading and associated instructions issued by him and may add such explanatory notes as he deems to be necessary or useful.

9. Telephone, Radio & GSM Messages :

Every telephone, radio & GSM messages relating to operation of the high-voltage system (including when relayed through a third party) shall be written down in full text by its sender and receiver without alteration or abbreviation (other than those approved), together with a record of the time of receipt. It **must be read back by the receiver to the sender exactly as written to ensure that it has been accurately received and understood to avoid any ambiguity on the part of the sender and receiver.**

10. Failure of Supply :

A failure of supply from whatever cause, to or from any part of the QGEWC's high-voltage system shall be immediately reported to the System Control Engineer.

DURING FAILURES OF SUPPLY, ALL APPARATUS, EQUIPMENT AND CONDUCTORS OF THE CIRCUIT (S) AFFECTED SHALL BE TREATED AS BEING ALIVE.

11. Dangerous Occurrences and Accidents :

All dangerous occurrences and accidents on the QGEWC's high-voltage system shall be reported immediately to the System Control Engineer who shall immediately pass on the relevant information to the Director, Electricity Networks Affairs or his Deputy confirming in writing as soon as possible. System Control Engineer shall also take immediate action to inform Security / Fire Officer, call Fire Brigade and Ambulance if required.

C. Safety Rules

12. General Safety Precautions :

12.1 Work on High Voltage Apparatus :

No person shall carry out work of any description (including maintenance, repairs, cleaning and testing) on any part of High Voltage apparatus unless that part of the apparatus is :-

a. Dead,

b. Isolated and all practicable steps have been taken to lock off live parts,

c. Efficiently connected to earth at all points of disconnection of supply to the apparatus or between such points and the point(s) of work. These earths should be applied in an approved manner,

d. Screened / or working area roped off where necessary to prevent danger and Caution & Danger notices fixed,

e. Released for work by the issue of a Permit-to Work or Sanction-for-Test and unless such person is fully conversant with the nature and extent of the work to be done.

It is the duty of the person issuing the Permit-to-Work or Sanction-for-Test to satisfy himself that the foregoing provisions are complied with.

Provided that if the clearances specified in Rule 17 (1) are maintained, work may be carried out on structures above ground level under Part 'A' of a Permit-to-Work or at ground level under a Limitation-of-Access and the provisions of Rule 12 (1) (a), (b) & c) need not apply. **Making live or dead by signal or pre-arranged understanding after an agreed interval of time is forbidden.**

12.2 Interference with Conductors :

No person shall touch the insulation which covers or supports any conductor subject to high voltage unless the conductor is dead, isolated and earthed.

12.3 Fixing of Danger & Caution Notices & Screens, Barriers, Flags etc.

Work shall not be carried out on any high voltage apparatus which has been made dead and earthed until Caution notices have been attached at all points where such apparatus can be made live. Danger Notices shall also be attached to or placed adjacent to the live apparatus and at the limits of the zone in which work may be carried out. Caution Notices, Danger Notices, Barriers, Screens and Flags shall be fixed and removed only by or under supervision of an Authorized Person.

12.3 Safety Locks (Distribution) :

a. Safety locks preferably differing from standard locks of the system shall be used to lock off all switches at points where the circuit on which work is to be carried out could be energized. The keys for such locks shall be kept in a key safe, if provided, or in some other safe place preferably in the possession of the Senior Authorized Person in charge of the work.

b. When the circuit on which work is to be carried out is controlled only by fuses and links, the fuses, links and carriers shall be removed and kept in the custody of the Senior Authorized Person responsible for issuing the Permit-to-Work, or in some safe place.

12.5 Danger Envelopes :

Danger envelopes will be provided for the reception of keys which secure switches, barriers, spout shutters, lock-out equipment or other similar devices provided for the protection of men working under a Permit-to-Work or Sanction-for-Test. The Danger envelope will be locked in a key cabinet, if available, until it is again required to restore the circuit to normal service.

12.6 Work on Towers & High Structures :

All persons while at work on towers, poles and high structures shall make proper use of their safety belts & helmets and no man shall work alone on any tower or high structure. All persons working on the towers and high structures shall be within the visual range of the PTW holder for the work.

13. Access to High Voltage Enclosures & Apparatus :

13.1 Enclosures Containing High Voltage Apparatus :

Barriers in generating stations or substations (including plates on access ladders) cutting off access to enclosures within a station, chambers, cubicles or cells containing live high voltage apparatus shall normally be kept locked and the key shall be kept in a box or cupboard and shall be removed only by an Authorized Person for the purpose of obtaining access to the high voltage apparatus. No person except an Authorized Person or a person acting under his immediate supervision shall have the access to any enclosure, chamber, cubicle or cell in which a live conductor is exposed.

13.2 Underground Chambers :

Smoking is strictly prohibited in all underground chambers except where it is specifically permitted. No person shall enter and exposed

flames are prohibited in any such chamber unless adequate precautions have been taken (e.g. use of suitable natural or forced ventilation) and the consent of an Authorized Person obtained. Where dangerous fumes are liable to be present, these precautions shall include testing for gas by means of an approved detector. Where one or more persons are required to work in an underground chamber and where dangerous fumes are liable to be present, an extra person shall be kept on duty outside the chamber and such person shall keep in touch with the worker or workers inside the chamber. If necessary, however, such person may enter the chamber from time to time although he shall not remain inside longer than necessary. If it is deemed necessary by an Authorized Person, approved breathing apparatus shall be worn and a rescue line attached to a person entering a confined space.

13.3 Towers & Gantries :

Gates and devices to prevent climbing of towers and gantries shall always be kept locked except when opened under the instruction of an Authorized Person.

14. Earthing :

Earthing devices shall be examined / checked for defects at least quarterly by the Competent Person in-charge for Tools and Plant and they shall be checked immediately prior to be used by the PTW holder for the work.

14.1 Equipment for Earthing :

When high voltage apparatus is to be discharged and earthed, it shall be done :-

a. By the use of earthing switches or special apparatus where provided, or

b. Where not provided by other approved means and when a circuit breaker is used to make the earth connection then the tripping feature shall be rendered in-operative before closing and if practicable, the mechanism shall be locked in the closed position. Earthing devices shall be of an approved type and of adequate current carrying capacity.

Earthing devices shall be examined for defects at least quarterly and always immediately prior to use by an Authorized Person.

14.2 Procedure for the Use of Portable Earthing Devices :

a. Earthing devices shall not be applied in any cell or compartment in which there is danger of accidental contact of the device with exposed metal part live at high voltage.

b. Earthing devices shall be connected to the earth system before being secured to the dead phases. The earthing connection shall only be secured to the phases by means of an earthing pole or other approved apparatus and care must be taken to ensure that good connection is made.

c. When removing earthing devices, they shall be disconnected from the phases first by means of an earthing pole or other approved apparatus and connection to the earth should be disconnected at last.

14.3 Earthing Metal-Clad Switchgear :

For the purpose of earthing metal-clad switchgear, approved appliances only shall be used. The insertion of the hand or any tool in to the contact spouts for this purpose is forbidden.

Before work is carried out on the withdrawable portion of truck type or metal-clad switchgear, the provisions of Rule 12.1.a & b shall first be complied with. The apparatus shall then be :-

a. Checked by means of an approved voltage indicator (the indicator itself being tested immediately before and after the verification).

b. Discharged to earth,

c. Efficiently connected to earth (such earth to remain connected unless the apparatus is bodily removed from its normal live position and is disconnected from the possible sources of supply).

15. Permits-to-Work & Sanction-for-Test :

15.1 Arrangements for issue :

a. Permits-to-Work and Sanction-for-Test shall be issued only with the consent of the System Control Engineer who shall retain in his custody a copy of each Transmission Permit-to-Work and Sanction-for-Test issued. In the case of a Distribution Permit-to-Work or Sanction-for-Test, he shall retain a record of their issue.

b. Work shall not be carried out by any person on high voltage apparatus or in proximity to any such apparatus where technical knowledge or experience is required to avoid danger until a Permit-to-Work or Sanction-for-Test has been signed and the hard copy handed by a Senior Authorized Person to the person in charge of the work. The Senior Authorized Person shall ensure the person receiving the Permit-to-Work or Sanction-for-Test fully understands its contents. The person in charge of the work shall then sign the card copy and its original and retain the card copy in his possession until he has signed the clearance and returned it to the Senior Authorized Person.

c. The person in charge to whom a Permit-to-Work is issued shall be a Competent Person and the work shall be carried out under his immediate supervision. In the case of an over head line with all conductors dead, immediate supervision shall be deemed to include the area between additional earths as defined in Rule 21.2.d.

d. No person holding a Permit-to-Work or Sanction-for-Test may leave the site of the work while work is in progress.

e. A Permit-to-Work shall be issued to the person in charge of each independent working party.

f. Only one Sanction-for-Test may be issued on high voltage apparatus at any one time and under no circumstances may a Permit-to-Work be in force on any high voltage apparatus within the points of isolation specified on a Sanction-for-Test.

15.2 Precautions During Progress of Work :

a. The apparatus isolated and earthed for work under the terms of a Permit-to-Work must remain so until the Permit-to-Work is cancelled.

b. Should work for which a Permit-to-Work or Sanction-for-Test has been issued be such that the apparatus may be put into commission before its completion, then each time the work is suspended, the Permit-to-Work or Sanction-for-Test shall be cancelled.

c. Apparatus isolated and earthed for testing and in connection with which the System Control Engineer has given to the Senior Authorized Person a Sanction-for-Test and approval for the operation of switches, isolators, earthing switches and earth connections for test purposes within the isolated section, comes under temporary control of the Senior Authorized Person.

He may, without further reference to the System Control Engineer, operate it in accordance with these Rules.

He may remove the earths and make it live from a testing supply. He will be responsible for coordinating all such operations on the isolated equipment and for ensuring safety, during tests.

15.3 Procedure for Clearance and Cancellation After Issue :

a. After work, for which a Permit-to-Work has been issued and has been completed (or suspended by a Senior Authorized Person), the person in charge of the work shall sign the clearance. He shall then immediately return the card to a Senior Authorized Person who shall then obtain the consent of the System Control Engineer and cancel the Permit-to-Work.

b. After work, for which a Sanction-for-Test has been issued and completed, the Senior Authorized Person shall sign the clearance with the exceptions noted and shall then obtain the consent of the System Control Engineer to cancel the Sanction-for-Test.

16. Limitation-of-Access :

16.1 Arrangement for issue :

a. Limitation-of-Access will be issued by an Authorized Person with consent of the System Control Engineer to a Competent Person.

b. A Limitation-of-Access will be issued to a QGEWC employee / Contractor's representative who is in charge of work in a high voltage compound, the work being such as will not require the issue of a Permit-to-Work under Rule 15.1.b. The Limitation-of-Access will be signed by an Authorized Person and the original copy handed to the person in charge of the work. The Authorized Person issuing the Limitation-of-Access shall ensure that the person in charge of the work fully understands its contents. The person in charge of the work will then sign the documents and retain the original copy in his possession until he has signed the clearance and returned it to the Authorized Person for cancellation.

c. The person in charge to whom the Limitation-of-Access is issued shall be a competent person and the work shall be carried out under his immediate supervision.

d. No person holding a Limitation-of-Access may leave the site of the work while work is in progress.

e. A Limitation-of-Access shall be issued to a person in charge of each independent working party who shall not hold more than one safety document at any one time.

16.2 Procedure for Clearance and Cancellation :

After work for which a Limitation-of-Access has been issued and completed (or suspended by an Authorized Person), the person in charge of the work shall sign the clearance. He shall then immediately return the original copy to an Authorized Person who will cancel the Limitation-of-Access with the consent of System Control Engineer.

17. Work in Substation & Switching Stations Containing Exposed Live Conductors.

17.1 Safety Clearance to Live Conductors :

a. When work is to be carried out in a substation in which there are exposed live high voltage conductors, then, unless the whole equipment is dead, the section which is to be made dead for work to be carried out shall be defined as far as possible by the use of barriers, notices, flags and roping arrangement so that the minimum clearance from the nearest exposed live conductor to ground level or to any platform or access way which may be required to be used shall be :

Rated Voltage	Clearance
Not exceeding 6.6 KV	2.57 m (8 ft 5 inch)
Exceeding 6.6 KV but not exceeding 11 KV	2.59 m (8 ft 6 inch)
Exceeding 11 KV but not exceeding 33 KV	2.74 m (9 ft 0 inch)
Exceeding 33 KV but not exceeding 66 KV	2.97 m (9 ft 9 inch)
Exceeding 66 KV but not exceeding 132 KV	3.43 m (11 ft 3 inch)
Exceeding 132 KV but not exceeding 275 KV	4.57 m (15 ft 0 inch)

The area to be defined at ground level shall only be that in which work is to be carried out.

b. If the work is such that these clearances are not sufficient to avoid danger, other suitable arrangements shall be made to provide the requisite degree of safety.

17.2 Use of Ladders & Long Objects :

a. Ladders shall be of an approved type and of no greater length than is required for the work involved.

b. Ladders and other long objects shall not be used without the permission of a Senior Authorized Person. The movement and erection of such ladders and objects shall be carried out only under the direct supervision of the Competent Person in charge of the work and when moved at ground level, they shall be carried only in the horizontal position and as near ground as practicable.

c. All portable ladders within substations or switching stations when not in use shall be securely locked to a suitable anchorage.

18. Work on Remotely or Automatically Controlled Equipment :

18.1 Before work is carried out on remotely or automatically controlled equipment such as circuit breakers, isolators, tap changing gear or air compressors, the automatic or remote control features shall first rendered in-operative.

18.2 Before any work is commenced on protection control or indication circuits, the System Control Engineer must be informed and precautions taken to prevent any mal-operation.

19. Work on High Voltage Apparatus other than Metal-Clad Switch gear Spouts, Cables or Overhead Lines :

Before any person is allowed to carry out any work on or repairs or modifications to or cleaning of any high voltage apparatus other than metal-clad switch gear spouts, cables and overhead lines, the following operations shall be carried out in strict sequence :

a. The apparatus shall be made dead,

b. The apparatus shall be isolated from all points of supply including voltage and auxiliary transformers and common neutral earthing equipment from which the apparatus may become alive,

c. Caution notices shall be attached at all points where the apparatus can be made alive,

d. The apparatus shall then be :-

(i) Checked to ensure that it is not live where practicable, by means of an approved voltage indicator itself being tested immediately before and after the verification,

(ii) Efficiently connected to earth at all points of isolation from the supply, to ensure that

effective earth connections are applied on all sides of plant/equipment require to work on including points of isolation from the common neutral earthing equipment where applicable or between such points and the points of work.

e. Circuit Breakers, Isolators, Spout Shutters, Control Handles and Safety Devices shall be locked in position by the keys provided for the purpose which shall then be placed in a Danger Envelope.

f. **TRANSMISSION ONLY :**

If work is such that operations (a) to (c) have to be carried out at more than one stations, the Authorized Person at each station shall place the keys involved in a Danger Envelope and lock the envelope in a key cabinet until he receives instructions from the System Control Engineer to restore the equipment to normal service.

g. A Permit-to-Work or Sanction-for-Test shall then be issued.

h. Unless the circuit main earths through which the apparatus is connected to earth are close to and visible from the point of work, the apparatus shall be efficiently connected to earth by means of additional earths at the point of work. The application of additional earths is not required where these earths coincide with the Circuit Main Earth (CME).

i. Earths may be removed under the terms of a Sanction-for-Test after which they shall be immediately replaced or noted under the 'exceptions' when clearing the Sanction-for-Test.

20.1 Busbar Spouts & Busbar Voltage Transformer Spouts :

When work is carried out on busbar spouts, the following operations shall be carried out in strict sequence :

a. The section of bus-bars on which work is to be carried out shall be made dead and shall be isolated from all points of supply.

b. The isolating arrangements shall be locked so that they can't be operated and the shutters of live spouts locked shut.

c. Where practicable, the bus-bars shall be checked by means of an approved voltage indicator to verify that they are not live, the indicator itself being tested immediately before and after the verification. The checking with the voltage indicator shall be done on the panel to be earthed with the Circuit Main Earths (CME) and also on the panel on which work is to be carried out.

d. Caution notices shall be attached at all points where the apparatus can be made live and Danger notices attached to all adjacent live apparatus.

e. The bus-bars shall be earthed with approved earthing equipment at a panel other than that at which work is to be carried out on the isolated section of bus-bars. For the purposes of earthing metal-clad switchgear approved appliances only shall be used. The insertion of the hand or any tool into the busbar and feeder spouts for this purpose is strictly forbidden.

f. The operation set out in rule 19 e, f & g shall be carried out.

g. Work on the spouts shall then be done under the personal supervision of a Senior Authorized Person

(where the feeds from all the remote ends are not isolated) who shall prove each spout dead by means of an approved voltage indicator before it is worked on, the indicator itself being tested immediately before & after the verification.

h. Earths may be removed under the terms of a Sanction-for-Test after which they shall be immediately replaced or noted under the "exceptions" when clearing the Sanction-for-Test.

20.2 Feeder Spouts & Feeder Voltage Transformer Spouts :

When work is to be carried out on feeder and voltage transformer spouts, the following operation shall be carried out in strict sequence:

a. The circuit shall be switched out and isolated,

b. The isolating arrangements shall be locked so that they can't be operated and shutters of live spouts shall be locked shut,

c. Where practicable, the circuit shall be checked by an approved voltage indicator to verify that it is dead, the indicator itself being tested immediately before and after the verification,

d. Caution notices shall be attached at all points where the apparatus can be made live and Danger notices attached to all adjacent live apparatus,

e. The circuit shall be earthed with approved earthing equipment at all points of isolation of supply. For the purposes of earthing metal-clad switchgear, approved appliances only shall be used. The insertion of the hand or any tool into the feeder or voltage transformer spouts for this purpose is strictly forbidden,

f. The operations set out in Rule 19.e, f & g shall be carried out,

g. Work on spouts shall then be done under the personal supervision of a Senior Authorized Person, who notwithstanding the requirements of Rule 12.1 and Rule 15.2.a. shall remove the earths at the point of work and prove each spout dead by means of an approved voltage indicator, before it is worked on, the indicator itself being tested immediately before and after the verification. If the earths that can be applied to the circuit are those applied in the spouts and are circuit main earths, then while work is in progress no other work shall be carried out on the circuit connected to those spouts. In all other cases, the requirements of Rule 12 shall apply.

h. When the spouts are connected to an overhead line on which there is any likelihood of dangerous induced voltages, additional earths shall be efficiently connected at the nearest point to the point of work where access to the conductors can safely be obtained.

i. Earths may be removed under the terms of a Sanction-for-Test after which they shall be immediately replaced or noted under the "exceptions" when clearing the Sanction-for-Test.

21. Work on High Voltage Cables & Overhead Lines :

21.1 High Voltage Cables :

The provisions of Rule 19 shall apply to work on high voltage cables and in addition, the following precautions shall be taken :

a. No person, after receiving a Permit-to-Work or Sanction-for-Test shall work on or in any way interfere with any high voltage cable or conduit or trough containing a high voltage cable until personally

instructed at the point of work by a Senior Authorized Person.

b. When any high voltage cable is to be cut or joint opened, a Senior Authorized Person shall satisfy himself that the cable has been made dead, identified and spiked before allowing work to proceed.

c. When work is to be carried out on cable circuits in proximity to other live circuits and on cable circuits with fully insulated metallic sheaths, special precautions should be taken to avoid danger from induced voltages. Where special conditions exist, the work shall be carried out in accordance with the QGEWC code of practice.

21.2 Overhead Lines with all Conductors Dead :

The provisions of Rule 19 shall apply to work on high voltage overhead lines and in addition the following precautions shall be taken :

a. All persons while working on towers, poles and high structures shall make proper use of their safety belts and helmets and shall be in visual range of a second person. Before any pole is climbed, it shall be sounded. No pole impaired by decay or damage shall be climbed until it has been securely guyed and if necessary, splinted and then only by one person.

b. At each station involved the Authorized Person shall personally check the identity of the circuit at the point of isolation and report to the System Control Engineer.

c. **TRANSMISSION ONLY :** Each person who may have to climb a tower shall be provided with a wristlet marked with the circuit designation of the line on which work is to be carried out and shall wear it in such a

manner that it will be, at all times, readily visible to the wearer. The person who will be in charge at each tower shall be provided with a green flag and shall place the green flag in a visible position before allowing any man to ascend the tower.

d. The conductor shall be efficiently connected to earth by the earthing party at the points (s) of work or at the adjacent tower on each side of the point (s) of work, but in no case shall earths be more than two spans apart. In addition, if conductors are to be broken, they shall be connected to earth at each side of, and on the same tower at the point of work where the break is to be made. These earths shall be applied before the break is made and shall remain in position until the conductors are reconnected or until work is completed.

21.3 Double Circuit Overhead Lines with one Circuit Live :

Where work similar to that covered by Rule 21.2 has to be carried out on double circuit overhead lines with one of the circuits live, the provisions of Rule 21.2 shall apply and the following additional precautions shall be taken :

a. After placing in position the green flag which shall fit the socket on the dead side of the tower, and before any other person is allowed access to the tower, the earthing party under the supervision of the Competent Person at the point of work shall climb the tower on the dead side and shall efficiently connect to earth each individual conductor on that side. They shall then affix red pennants to the cross arms supporting the live conductors at the junction of these cross arms with the tower body. The conductors shall remain efficiently earthed and the Red pennants shall remain in position throughout the progress of the work and the earths

and pennants shall be removed by the Earthing Party only after all other members of the Working Party have descended the tower on completion of the work. While affixing or removing the earths and red pennants, the Earthing Party shall be under observation by another person at ground level.

b. Work on a Tee-Off tower shall only be carried out in the presence of a Senior Authorized Person and special care shall be taken at terminal and angle towers.

21.4 Towers Carrying Live Conductors :

Work above the anti-climbing devices on towers carrying live conductors shall be permitted only under the following conditions :-

a. The work shall be carried out under the terms of a Part 'A' Permit-to-Work and from within the body of the tower.

b. Before anyone is allowed to start work, the Competent Person in charge at each tower shall define the area to be worked in by removable barriers, notice boards, roping or pennants arranged to prevent any person working on the tower at less than the following distances from any live conductors :

Rated Voltage	Clearance
Up to 33 KV	2.74 m (9 ft 0 inch)
Exceeding 33 KV but not exceeding 66 KV	2.97 m (9 ft 9 inch)
Exceeding 66 KV but not exceeding 132 KV	3.43 m (11 ft 3 inch)
Exceeding 132 KV but not exceeding 275 KV	4.57 m (15 ft 0 inch)

While defining the working area, the Competent Person in charge shall be under observation by another person at ground level.

c. No man shall work in such a manner that his arms or any tool extend beyond the limits defined in

subparagraph (b) and no tool greater in length than 0.3 meters (12 inches) shall be taken up a tower.

d. Upon completion or cancellation of the work, the Competent Person in charge shall inform all members of the working party that it is no longer safe to work upon the tower and shall then remove the barriers, notice boards, roping or pennants defining the working areas. While removing all barriers etc., the Competent Person shall be under observation by another person at ground level.

21.5 Adverse Weather Condition :

a. In the event of a near approach of a lightning storm, all work on overhead lines shall cease immediately and the System Control Engineer is informed.

b. No person alone shall patrol an overhead line across country when visibility is dangerously impaired for any reason.

c. If overhead lines are to be patrolled during the hours of darkness, suitable lighting equipment shall be used.

22. Testing of High Voltage Apparatus :

a. When any high voltage apparatus is to be subjected to test voltage before being connected to the high voltage system, the Senior Authorized Person responsible for applying the test voltage shall ensure that such apparatus is adequately guarded to prevent danger and that Danger Notices are attached in conspicuous positions during the period the apparatus may be subject to voltage. All cables shall be discharged before and after the application of the test voltage.

b. Temporary conductors used for testing purposes shall be of adequate size and easily visible.

c. Test connections shall not be applied in a cell or compartment in which there is any exposed metal live at high voltage (this Rule does not exclude the use of approved voltage indicators or approved devices for phasing out circuits).

d. Testing of HV apparatus in the present of flammable gas (s) shall not be permitted.

23. Work on High Voltage Equipment & Ancillary Apparatus containing Sulphur Hexaflouride (SF6) Gas :

a. For any equipment containing Sulphur Hexaflouride Gas, the QGEWC code of practice must be available at the point of work stating the method for dealing with the gas and associated compounds. The apparatus shall bear an approved notice stating it contains Sulphur Hexaflouride.

b. In addition to the requirements of Rule 19 and Rule 24, the following special precautions shall be taken when any work involves access to any part of the equipment which is or has been in contact with the gas or associated compounds.

(i) The apparatus shall be isolated from all sources of the supply of gas purged in accordance with the QGEWC appropriate code of practice and the associated receivers and pipework, which shall be left open to the atmosphere.

(ii) The valves shall be locked by safety locks and the keys shall be placed in the appropriate Danger Envelope.

(iii) Caution notices shall be attached to the valves.

(iv) The work shall be carried out under a Permit-to-Work.

c. Approved protective clothing, respirators, eye shields and safe handling equipment shall be provided and used where danger may arise from the gas or associated compounds in accordance with the QGEWC code of practice. First Aids shall be kept ready before commencing the work.

24. Work on High Voltage Equipment Operated by or Containing Compressed Air :

24.1 Work other than Maintenance Testing or Operational Testing & Adjustments:

Work other than maintenance testing or operational testing and adjustments on high voltage equipment operated by or containing compressed air shall be carried out only under the following conditions :

a. High Voltage Apparatus, after having been isolated shall be earthed by an Authorized Person in accordance with the provisions of Rule 19.

b.1. The valves controlling the supply of air to the equipment shall be closed and the air released from the associated receivers and pipe work which shall be left open to the atmosphere,

b.2. The valves shall be locked in position and the keys retained by the Senior Authorized Person and Caution Notices applied,

b.3. A Permit-to-Work or a Sanction-for-Test shall be issued to the person in charge of the work.

24.2 Maintenance Testing :

Maintenance testing on high voltage equipment operated by or containing compressed air shall only be carried out (a) under the terms of a Sanction-for-Test, or (b) under the direct supervision of a Senior Authorized Person under the terms of a Permit-to-Work. The provisions of Rule 24.1 shall apply before the Sanction-for-Test or Permit-to-Work is issued. The Permit-to-Work may be the one issued to a Competent Person under the terms of Rule 24.1 but under no circumstances will there be more than one **Permit-to-Work issued on the high voltage equipment**. The Senior Authorized Person shall ascertain from the System Control Engineer that no other Permit-to-Work has been issued on the apparatus other than the Permit-to-Work under which the maintenance testing is to be carried out.

24.3 Operational Testing & Adjustments :

Operational testing and adjustment on equipment in service, operated by or containing compressed air may be carried out under the direct supervision of a Senior Authorized Person, in which case the provisions specified under Rule 12.1 shall apply.

25. Work on Oil Tanks :

a. No person shall enter a vessel which has been emptied of oil or any other inflammable substance until a Senior Authorized Person is satisfied that all dangerous vapours have been expelled.

b. Smoking and exposed flames are prohibited in the vicinity of open vessels containing or which have contained oil or any other inflammable substance until the precautions specified in clause 25.c have been taken,

c. Work on such vessels involving the application of heat is forbidden until all practicable steps have been taken to prevent fire or explosion either by the removal of the

inflammable substance and any fumes or by rendering them non-explosive and noninflammable.

26. Fire Protection Equipment :

26.1 Automatic Control :

a. Before work or inspection are carried out in any enclosure protected by automatic fire extinguishing equipment, the automatic control shall be rendered inoperative and the equipment left on hand control and a notice to this effect shall be attached.

b. The automatic control shall be restored immediately after the persons engaged on the work or inspections have withdrawn from the protected enclosure.

c. **The rendering inoperative of the automatic control and the placing of Caution notices shall be noted on any Permit-to-Work issued for the work in the protected enclosure. System Control Engineer should be informed before disabling Automatic feature of CO2 and enabling it after the work.**

26.2 General :

a. Contact with some chemicals used in fire protection equipment may be dangerous and in such cases notices to that effect shall be displayed adjacent to the equipment.

b. Portable fire fighting equipment shall not be used on electrical apparatus unless such apparatus has been disconnected from the supply.

c. Portable CO2, dry chemical and carbon tetrachloride extinguishers may be used in the vicinity of live electrical apparatus provided that in the handling of the extinguishers, the safety clearances specified in Rule 17.1 are maintained. After the discharge of

portable CO_2 or carbon tetrachloride extinguishers in a confined space, the operator shall leave the space until the precautions set out in (d) have been taken.

d. After any fire, or after the discharge of CO_2 or carbon tetrachloride extinguishers in an enclosed space, the space shall be thoroughly ventilated before entry or suitable breathing apparatus shall be worn if entry is necessary before the gases have been cleared.

27. Rules for Work on Medium & Low Voltage Apparatus, Conductors & Equipment :

27.1 Precautions to be taken before Working on Medium & Low Voltage Systems:

The consequences of shock or burns from short circuit associated with medium and low voltage systems may be serious or in some circumstances, fatal. Whenever practicable, therefore, work on medium & low voltage apparatus, conductors and equipment shall be done while they are dead.

a. Apparatus must always be made dead wherever this does not cause materially inconvenience to consumers. The connecting of services either overhead or underground does not normally necessitate making the distributor dead to work on.

b. When working on dead medium and low voltage apparatus, suitable precautions shall be taken by screening or other means to avoid danger from inadvertent contact with live conductors within the working zone.

c. Caution notices shall be securely fixed on all switch gear controlling the apparatus which has been made dead and on which work is proceeding. Danger notices shall also be attached (where applicable) on or adjacent to live apparatus and at the limits of the zone on which work may be carried out.

d. It is not always possible to make dead or earth medium and low voltage apparatus. All work on medium and low voltage apparatus must be carried out as if it is live unless it is proved dead.

e. When working on live medium or low voltage apparatus, suitable precautions shall be taken by screening or other means to avoid danger from inadvertent contact with live conductors or earthed metalwork.

f. Work on live medium or low voltage apparatus, conductors or equipment shall be undertaken only by a Competent Person.

27.2 Work on Medium or Low Voltage Cables :

a. Difficulties are sometimes experienced in the identification of underground cables. The armouring may not be a safe guide in distinguishing between high and low voltage. Where more than one cable exists on a route it shall be the responsibility of the Engineer in charge of the work to positively identify the cable to be worked upon. In the case of any uncertainty, all the cables in the route shall be made dead.

b. When work is to be carried out on a dead medium voltage cable, it shall be isolated from all points of supply and caution notices affixed. All practicable steps shall be taken to prevent the cable being made live inadvertently, including locking off of any switch gear and the removal of any fuses or links. Keys, fuses or links shall be kept in a safe place. The circuit shall be proved dead by means of an approved indicator, the indicator itself being tested immediately before and after the verification.

c. Where work is to be carried out on a live cable, only one conductor should be bared at a time and rubber gloves or a rubber mat shall be used in addition to any rubber boots worn. All metalwork adjacent to

the point of work shall be adequately shrouded with insulating material and the metallic sheath shall be bonded across with an approved insulated conductor before cutting to ensure the continuity of the electrical circuit through the sheath. **No man shall work on a live cable unaccompanied.**

d. When work is to be carried out on auxiliary cables which may be subjected to induced voltages from adjacent high voltage circuits, additional precautions to prevent danger from these voltages shall be taken in accordance with the special instructions issued by the Director Electricity Networks Affairs, QGEWC.

27.2 Work on Medium & Low Voltage Overhead Lines :

a. General :

All persons while at work on towers, poles and high structures shall make proper use of their safety belts & helmets and shall be in visual range of a second person. Before any pole is climbed, it shall be sounded. No pole badly impaired by decay or damage shall be climbed until it has been securely guyed and if necessary splinted and then only by one person.

b. Adverse Weather Conditions :

(i) In the event of a near approach of a lightning storm, all work on overhead lines shall cease immediately.

(ii) No person alone shall patrol an overhead line across country when visibility due to high humidity is dangerously impaired for any reason.

(iii) If overhead lines are to be patrolled during the hours of darkness, suitable lighting equipment shall be used.

c. **Work on Medium or Low Voltage Overhead Lines :**

Before work is commenced on bare medium or low voltage overhead lines which have been made dead, the conductors including the neutral shall be short circuited and where practicable earthed.

(i) If the Competent Person in charge together with the working party leaves the line at any time, so that the part of the line on which work is in progress is out of sight of such person and party, such person shall verify that the local earths are in position before work is restarted on the line.

(ii) Where work on live medium or low voltage overhead lines is carried out with the approval of the Director Electricity Networks Affairs, QGEWC, the following precautions in addition to those of Rule (27) shall be observed :

d. **Work for fault location and repairs of Pilot / Telecommunication cables :**

i) Tests and fault location on the cable to be done under SFT.

ii) Repairs to be done under PTW Part 'B'

Work on a live overhead line shall be carried out by a Competent Person and rubber gloves shall be worn,

In addition, he shall make proper use of his safety belt when working and a second person must be in attendance near the pole on which the Competent Person is working,

The removal or replacing of fuses or links mounted on poles may be carried out by a Competent Person unattended.

****

KAHRAMAA الهيئة العامة القطرية للكهرباء والماء
Qatar General Electricity & Water Corporation

Dept. of Electricity Network

PERMIT TO WORK

1. ISSUE. No. .....
TO.....IN THE EMPLOY OF .....
FOR THE FOLLOWING WORK TO BE CARRIED OUT :- .....
.....

PART 'A'
I declare that it is safe to work on the following earthed metal enclosures or structures. .....
.....
.....

ALL OTHER PARTS ARE DANGEROUS.

PART 'B'
I declare that it is safe to work on the following H. V. apparatus which is dead, isolated from all live conductors and is connected to earth. .....
.....
.....

ALL OTHER PARTS ARE DANGEROUS.

Points at which the system is isolated. .....
.....
.....

Circuit main earths have been connected at the following Points. .....
.....
.....

Other Precautions .....
.....

No. of additional earths connections issued. .....
No. of circuit identity wristlets issued. .....
Issued with the consent of System Control Engineer. .....
Signature of issuing Senior Authorised Person. .....
Time ..... Date .....

---

2. **RECEIPT.**
I hereby declare that I accept responsibility for carrying out the work on the apparatus detailed on this Permit-to-work and that no attempt will be made by me, or by the men under my control, to carry out work on any other apparatus.
Signature of person in charge of work .....
Time ..... Date .....

---

3. **CLEARANCE.**
I hereby declare that the work for which this Permit-to-work was issued is now suspended/ *completed and that all men under my charge have been withdrawn and warned that it is no longer safe to work on the apparatus specified on this Permit-to-work, and that all gear, tools and additional earthing connections are clear.
Signature of person in charge of work .....
Time ..... Date .....

---

4. **CANCELLATION.**
I declare that this Permit-to-work has been cancelled with the consent of .....
..... System Control Engineer.
Signature of Senior Authorised Person .....
Time ..... Date .....
* Delete word not applicable

المؤسسة العامة القطرية للكهرباء والماء
KAHRAMAA كهرماء
Qatar General Electricity & Water Corporation

إدارة شبكات الكهرباء
ترخيص بالعمل

١- صادر : رقم :

الى السيد / ..... العامل لدى : .....

للقيام بالاعمال التالية : .....

.....

الجزء (أ)

أقر بانه قد تم تأمين سلامة العمل .....

فى المناطق او الانشاءات الاتية والمحاطة .....

بالاسوار المثبتة فى الارض .....

كافة المناطق الاخرى خطرة

الجزء (ب)

أقر بانه قد تم تامين سلامة العمل .....

على معدات الضغط العالى المعزولة .....

من كل طاقة وتم توصيلها .....

بالارضى .....

كافة المناطق الاخرى خطرة

المناطق التى تم عزلها عن التيار الكهربائى : .....

.....

تم توصيل دوائر الارضى الرئيسية فى الاماكن الاتية : .....

تحذيرات اخرى : .....

عدد الموصلات الارضية الاضافية الصادرة : .....

عدد وألوان حلقات الدوائر المطابقة الصادرة : .....

تم الاصدار بموافقة مهندس التحكم والمراقبة : .....

توقيع المهندس المسؤول عن الاصدار :

الساعة ..... التاريخ: .....

٢- اقرار :

أقر أنا الموقع ادناه بأننى اقبل مسئولية تنفيذ الاعمال على المعدات المحددة فقط فى هذا الترخيص، كما اننى أو اى من العاملين تحت امرتى لن نحاول القيام بالعمل على أية معدات اخرى.

توقيع الشخص المسؤول .....

الساعة ..... التاريخ : .....

٣ - شهادة اخلاء :

أقرانا الموقع أدناه بأنه قد تم (انهاء /* تأجيل) العمل الذي تم استخراج هذا الترخيص من اجله وقد تم سحب جميع العاملين تحت إشرافي وتم تحذيرهم من خطورة الاقتراب او العمل فى الاماكن المذكورة بهذا الترخيص، كما تمت ازالة جميع الآلات والمعدات والوصلات الارضية الاضافية.

أقريانه قد تم فحص ..... وصلات ارضية .....

وحلقات الدوائر المطابقة : .....

توقيع المسؤول عن العمل .....

الساعة ..... التاريخ : .....

٤ - الغاء الترخيص :

اقريانه قد تم الغاء هذا الترخيص للعمل بموافقة : .....

مهندس التحكم والمراقبة : .....

توقيع المسؤول الاول

الساعة ..... التاريخ : .....

(لا يتم تطبيق الفقرات الملغاه)

KAHRAMAA

المؤسسة العامة القطرية للكهرباء والماء

Qatar General Electricity & Water Corporation

ELECTRICITY NETWORK AFFAIRS
ELECTRICAL LIMITATION - OF - ACCESS

This form must not be used for work on apparatus for which an Electrical permit to work is required.

1. **ISSUE:**

Name : .....

In the employ of : .....

being a competent person is hereby given permission to carry out the work described on the apparatus detailed below.

Work must not be carried out on any other apparatus.

Location : .....

Apparatus : .....

.....

.....

Work : .....

.....

.....

Remark : .....

.....

.....

* Control Engineer notified

Time : ..... Date : .....

Signed : ..... being a person authorised to issue LOA.

---

2. **RECEIPT:**

Received by : ..... being the person in charge of the work

Time : ..... Date : .....

---

3. **CLEARANCE:**

I hereby declare that all men under my charge have been withdrawn and warned that it is no longer permitted to work on the apparatus specified in this form and that all gear and tools are clear.

Signed : ..... being a person in charge of the work.

Time : ..... Date : .....

---

4. **CANCELLATION:**

Cancelled by : ..... being the person qualified to cancel this card

Time : ..... Date : .....

* Control Engineer notified

Time : ..... Date : .....

---

* To be filled in as required.

On completion of the work the holder must surrender this Limitation - of Access for cancellation, after which no work must be done on the Apparatus.

المؤسسة العامة القطرية للكهرباء والماء
KAHRAMAA
Qatar General Electricity & Water Corporation

إدارة شبكات الكهرباء

تصريح بأعمال كهربائية محددة

لايجب إستخدام هذا النموذج للترخيص بالعمل على الأجهزة الكهربائية التي تتطلب إصدار نموذج ((ترخيص بالعمل))

١-إصدار :

الأسم : .....

جهة العمل : .....

بإعتبار المذكور أعلاه شخصاً مسؤولاً فلقد منح ترخيصاً بإنجاز الأعمال الخاصة بالأجهزة الكهربائية الموضحة أدناه

الموقع : .....

الجهاز : .....

العمل : .....

ملاحظات : .....

.....

.....

*تم إشعار مهندس التحكم والمراقبة

فى تمام الساعة ..... : بتاريخ : .....

*تم إشعارمهندس القسم أو المناوب المسؤول

فى تمام الساعة ..... : بتاريخ : .....

توقيع المسؤول عن إصدار هذا النموذج

---

٢ - إيصال :

إسم المستلم : .....

بإعتباره المسؤول عن الإشراف على العمل

فى تمام الساعة ..... : بتاريخ : .....

---

٣ - شهادة إخلاء الموقع:

أقر أنا الموقع أدناه بأنه قد تم سحب جميع العاملين تحت إشرافي من الموقع وتم تحذيرهم بعدم القيام بأي أعمال أخرى على الأجهزة الكهربائية المذكورة في هذا النموذج كما أقر بسلامة كل المفاتيح والأجهزة الموجودة بالموقع.

توقيع الشخص المسؤول عن العمل :

فى تمام الساعة ..... : بتاريخ : .....

---

٤ - إلغاء التصريح :

تم إلغاء هذا التصريح بواسطة : .....

حيث أنه المسؤول عن إلغاء هذا التصريح

فى تمام الساعة ..... : بتاريخ : .....

تم إشعار مهندس المواقبة والتحكم

فى تمام الساعة ..... : بتاريخ : .....

---

*تعبأحسب الحاجة :

على حامل هذا التصريح التقدم لإلغاء فورالإنتهاء من الأعمال المذكورة وبعدها يحظر تماماً القيام بأي عمل على الأجهزةالمذكورة.

KAHRAMAA المؤسسة العامة القطرية للكهرباء والماء
Qatar General Electricity & Water Corporation

Dept. of Electricity Network

CIRCUIT ISOLATION AND EARTHING CERTIFICATE

PERMIT-TO-WORK **No.** .....

Circuit : .....

.....

.....

Details of Isolation .....

.....

.....

Points at which circuit main earths have been applied to the above circuits.

.....

.....

We hereby declare that in joint operation with the KAHRAMAA System Control Engineer the above circuit has been isolated and earthed at the points stated. Safety devices and earths will not be removed until all permit to work cards have been cancelled.

Signed on behalf on Consumer/IPP* ..... Time : .....

Signed on behalf on KAHRAMAA. ..... Date : .....

We hereby declare that in joint consultation with the KAHRAMAA System Control Engineer all PERMIT-TO-WORK cards issued on the above circuits which have been issued by KAHRAMAA / CONSUMER have been cancelled and that this circuit isolation and earthing certificate is now cancelled.

Signed on behalf on Consumer/IPP*..... Time : .....

Signed on behalf on KAHRAMAA. ..... Date : .....

Delete where not applicable

Consumer Permit-to-work Nos. .....

KAHRAMAA Permit-to-work Nos. .....

THIS FORM OF CERTIFICATE PERMITS THE ISSUE OF PERMITS TO WORK ONLY.

المؤسسة العامة القطرية للكهرباء والماء
KAHRAMAA كهرماء
Qatar General Electricity & Water Corporation

شؤون شبكات الكهرباء

شهادة بالعزل الكهربائي والتوصيل الأرضي

تصريح بالعمل رقم : .....

الدائرة / الجهاز .....

.....

.....

.....

.....

تفاصيل المناطق التي تم عزلها .....

.....

.....

.....

.....

النقاط التي تم توصيل دوائر الأرضي الرئيسية .....

.....

.....

.....

.....

نقر نحن الموقعين أدناه وبالمشاركة مع مهندس المراقبة والتحكم بأن جميع الدوائر / الأجهزة أعلاه قد تم عزلها عن التيار الكهربائي وتم إتصالها بالأرضي عند النقاط المذكورة . أجهزة الأمان ووصلات الأرضي لن يتم إزالتها أو تغيير وضعها حتى يتم إلغاء جميع تصاريح العمل التي تم إصدارها .

توقيع المسؤول عن المستهلك : ..... الوقت : .....

توقيع مهندس كهرماء المسئول: ..... التاريخ : .....

نقر نحن الموقعين أدناه وبالمشاركة مع مهندس المراقبة والتحكم أن جميع تصاريح العمل التى أصدرت على الدائرة أعلاه والتي تم إصدارها بواسطة مهندس كهرماء/المستهلك قد تم إلغاؤها . وأن شهادة العزل الكهربائي والتوصيل بالأرضي هذة تم إلغاؤها الآن .

توقيع المسؤول عن المستهلك : ..... الوقت : .....

توقيع مهندس كهرماء المستول: ..... التاريخ : .....

(إلغاء حيثما لا يمكن)

رقم تصريح العمل للمستهلك .....

رقم تصريح العمل للكهرماء .....

هذة الشهادة تسمح فقط بإصدار تصريح بالعمل .

KAHRAMAA

المؤسسة العامة القطرية للكهرباء والماء

Qatar General Electricity & Water Corporation

Dept. of Electricity Network

CIRCUIT ISOLATION AND EARTHING CERTIFICATE

SANCTION-FOR-TEST No. .....

Circuit : .....

.....

.....

Details of Isolation .....

.....

.....

Points at which circuit main earths have been applied to the above circuits.

.....

.....

We hereby declare that in joint operation with the KAHRAMAA System Control Engineer the above circuit has been isolated and earthed* at the points stated. Safety devices and earths will not be removed until the Sanction for-Test card has been cancelled, except as provided for under KAHRAMAA Safety Rule No. 15 (2) (c).

Signed on behalf on Consumer/IPP* ..... Time : .....

Signed on behalf on KAHRAMAA. ..... Date : .....

We hereby declare that in joint consultation with the KAHRAMAA System Control Engineer the Sanction-for-Test card on the above circuit which has been issued by KAHAMMA / CONSUMER* have been cancelled and that this circuit isolation and earthing certificate is now cancelled.

Signed on behalf on Consumer/IPP* ..... Time : .....

Signed on behalf on KAHRAMAA. ..... Date : .....

*Delete where not applicable

Consumer Sanction-for-Test Nos. .....

KAHRAMAA Sanction-for-Test Nos. .....

THIS FORM OF CERTIFICATE PERMITS THE ISSUE OF SANCTION FOR TEST ONLY.

المؤسسة العامة القطرية للكهرباء والماء
KAHRAMAA كهرماء
Qatar General Electricity & Water Corporation

شهادة بالعزل الكهربائي والتوصيل الأرضي

ترخيص فحص واختبار رقم : .....

الدائرة / الجهاز .....
.....
.....
.....

تفاصيل المناطق التي تم عزلها .....
.....
.....
.....

النقاط التي تم توصيل دوائر الأرضي الرئيسية .....
.....
.....
.....

نقر نحن الموقعين أدناه وبالمشاركة مع مهندس المراقبة والتحكم بأن جميع الدوائر / الأجهزة أعلاه قد تم عزلها عن التيار الكهربائي وتم ايصالها بالأرضي عند النقاط المذكورة . أجهزة الأمان ووصلات الأرضي لن يتم إزالتها أو تغيير وضعها حتى يتم إلغاء ترخيص فحص واختبار الذي تم إصداره ما عدا ما تم ذكره في البند رقم (١٥) ، (٢) ، (س) في إجراءات السلامة الخاصة بكهرماء.

توقيع المسئول عن المستهلك : ..... الوقت : .....
توقيع مهندس كهرماء المسئول: ..... التاريخ : .....

نقر نحن الموقعين أدناه بالمشاركة مع مهندس المراقبة والتحكم (كهرماء) بأن تصريح فحص واختبار والذي صدر على الدائرة المذكورة أعلاه بواسطة كهرماء / المستهلك قد تم إلغاؤه وأن شهادة العزل الكهربائي والتوصيل بالأرضي هذه تم إلغاؤها الآن.

توقيع المسئول عن المستهلك : ..... الوقت : .....
توقيع مهندس كهرماء المسئول: ..... التاريخ : .....

(إلغاء حيثما لا يمكن)

شهادة فحص واختبار (المستهلك) رقم .....

شهادة فحص واختبار (كهرماء) رقم .....

هذه الشهادة تسمح فقط بإصدار تصريح فحص وإختبار

KAHRAMAA المؤسسة العامة القطرية للكهرباء والماء
Qatar General Electricity & Water Corporation

Dept. of Electricity Network
SANCTION - FOR - TESST

1. **ISSUE** No. .....

To. .....

Declaration by Senior authorised Person.

I have agreed with ..... System Control Engineer for the following work to be carried out:

.....

.....

The apparatus detailed below has been isolated for this purpose from the remainder of the system and must not be reconnected at any point without the sanction of the System Control Engineer. Work on and operations of any part of the isolated apparatus must be carried out in strict accordance with the KAHRAMAA. Safety Rules, but may be carried out without further reference to the System Control Engineer. The System Control Engineer has made arrangements for the recipient of this card to issue instructions regarding the testing supply.

The Apparatus isolated .....

.....

The points of isolation .....

.....

Circuit Main Earths have been connected at the following points. (These earths may be removed without reference to the System Control Engineeer) .....

.....

.....

Other Precautions .....

.....

No. of additional earths connections issued. .....

Sanction is hereby given for the work to proceed.

Signed ..... being a Senior authorised Person.

Time ..... Date : .....

---

2. **RECEIPT**

I declare that I accept responsibility for carrying out the testing on the apparatus detailed on this Sanction for Test, that I am personally responsible for taking the neccessary safety precautions to avoid danger, and that no attempt will be made by me, or by men under my control, to carry out work on any other apparatus.

Signed ..... being a Senior authorised Person in charge of the work

Time ..... Date : .....

---

3. **CLEARANCE**

I declare that all men under my control have been withdrawn and warned that it is no longer safe to work on the apparatus specified in this Sanction-for-Test and that all gear, tools, additional earths and other connections are clear and have been moved to ground level and that with the exceptions noted below the islolated apparatus has been returned to its condition at the time of issue of this Saction-for-Test.

EXCEPTIONS .....

.....

Signed ..... being a Senior Authorised Person in charge of the work

Time ..... Date : .....

---

4. **CANCELLATION**

I declare that I have checked in ..... additional earth connections and that with the consent of ..... System Control Engineer this Sanction-for-Test is cancelled.

Signed ..... being a Senior Authorised Person in charge of the work

Time ..... Date : .....

المؤسسة العامة القطرية للكهرباء والماء KAHRAMAA
Qatar General Electricity & Water Corporation

شؤون شبكات الكهرباء
ترخيص فحص واختبار

١- صادر : رقم : .....

إلى : .....

أقر أنا الموقع إدناه (أحد كبار المسؤولين) بأنه تمت الموافقة بيني وبين السيد / .....
المهندس المسؤول بمركز المراقبة والتحكم على القيام بالأعمال التالية :

.....

لقد تم فصل الأجهزة المذكورة أدناه عن باقي أجزاء الشبكة ويجب عدم إعادة توصيلها عند أي نقطة قبل الحصول على موافقة مهندس التحكم والمراقبة . كما يجب مراعاة تنفيذ هذه الأعمال طبقاً لقوانين السلامة الصادرة من كهرماء دون ضرورة الرجوع إلى مهندس المراقبة والتحكم مرة أخرى .

ولقد قام مهندس المراقبة والتحكم بعمل الترتيبات الخاصة لتمكين مستلم الترخيص من إصدار تعليماته بخصوص عمل (الفحص) اللازم للتأكد من فصل هذة الأجهزة .

الأجهزة المفصول عنها التيار : .....

.....

نقاط الفصل : .....

نقاط التأريض الرئيسية بالدائرة : .....

(يمكن التأريض دون الرجوع ....

إلى مهندس المراقبة والتحكم) : .....

إحتياطات أخرى : .....

عدد التوصيلات الأرضية الإضافية الأخرى : .....

وبناء عليه تم الترخيص بالبدء في هذه الأعمال ،،،

التوقيع : ..... المقر بما فيه : .....

الوقت : ..... التاريخ : .....

٢- إيصال إستلام :

أقر أنا الموقع أدناه بأنني أتحمل مسؤولية إجراء الفحص اللازم على الأجهزة المذكورة في هذا الترخيص كما أقر بأنني مسؤول شخصياً عن إتخاذ إحتياطات الأمن الضرورية لتجنب أي خطر وأتعهد بعدم قيامي أو قيام أي شخص من العاملين لدي بالقيام بأي عمل على أي أجهزة أخرى غير الوارد ذكرها في هذا الترخيص .

التوقيع : ..... المسؤول عن تنفيذ الأعمال :

الوقت : ..... التاريخ : .....

٣- إخلاء الموقع :

أقر أنا الموقع أدناه بأنني قد أخليت الموقع وسحبت كل العاملين التابعين لي منه وحذرت من خطورة العمل على الأجهزة المذكورة أعلاه في هذا الترخيص وأن كل الأجهزة والأدوات والتوصيلات الأرضية الإضافية قد تم إزالتها فيما عدا الإستثناءات المذكورة أدناه فإن الأجهزة السابق عزلها قد تم إعادتها إلى حالتها الأصلية قبل صدور هذا الترخيص .

الإستثناءات : .....

التوقيع : ..... المسؤول عن تنفيذ الأعمال :

الوقت : ..... التاريخ : .....

٤- إلغاء الترخيص :

أقر بأنني قد فحصت عدد ..... من التوصيلات الأرضية الاضافية وبعد أخذ موافقة السيد / .....
..... مهندس المراقبة والتحكم قد تم إلغاء صلاحية هذا الترخيص .

التوقيع : ..... المسؤول عن تنفيذ الأعمال :

الوقت : ..... التاريخ : .....

خطـــــــــــر

الاجهزه متصله بالتيار الكهربائي

DANGER

LIVE APPARATUS

تنبيه

لاتُشَغِّل هذا المفتاح

CAUTION

DO NOT INTERFERE

Electricity Networks Affairs شؤون شبكات الكهرباء

خطر

DANGER
ENVELOPE

SUB-STATION / CIRCUIT .....

.....

.....

DESCRIPTION OF WORK .....

.....

.....

.....

.....

.....

REMARKS .....

.....

.....

.....

.....

.....

.....

THIS EVELOPE CONTAINS THE
FOLLOWING KEYS :- .....

.....

.....

.....

.....

.....

.....

.....

.....

This evelop is to be sealed before the issue of OPERATIONAL DOCUMENTS and must not be opened without the sanction of SYSTEM CONTROL (except in extreme emergency) and following the cancellation of all DOCUMENTS.

Signature .....
Senior Authorised / Authorised Person Responsible

On completion of the work, all cancelled documents are to be sent to System Control in this envelope

OPERATIONAL DOCUMENTS

.....

.....

.....

.....

.....

.....

.....

.....

HIGH
PLACE