المؤسسة العامة القطرية للكهرباء والماء
Qatar General Electricity & Water Corporation

CONTRACT No GTC 626/2014A

CONSTRUCTION OF MEGA RESERVOIR PRPSs
(PACKAGE A - UMM BIRKA)

CONTRACT DOCUMENTS
(VOLUME 15 OF 19)

CONSOLIDATED CONTRACTORS GROUP S.A.L. (OFFSHORE) (CCC) &
TEYSEER CONTRACTING COMPANY W.L.L.
JOINT VENTURE

TABLE OF CONTENTS

VOLUME	SECTION	ITEM
VOLUME 1	1	Contract Agreement
	2	Letter of Award
	3	Letter of Confirmation
	4	Secrecy Declaration
	5	Performance Bond
	6	Commercial Registration and Power of Attorney
	7	Summary of Contract
	8	General Conditions of Contracts
VOLUME 2/6	9	Appendix A: Scope of Work and Specifications
VOLUME 7	10	Appendix B: Schedule of Prices
		1. Form of Tender
		2. Preamble
		3. Bills of Quantities
		• Contract BOQ (After Currency Adjustment)
	11	Appendix C: Insurance
		1. Preamble
		2. All Risk Insurance
		3. Workmen's Compensation Insurance
	12	Appendix D Administration Instructions
VOLUME 8	13	Appendix E Contractor Resources
		Annexure 1: Contractor's Personnel
		Annexure 2: Facilities, Plant & Equipment owned by Contractor
		Annexure 3: Facilities, Plant & Equipment proposed by Contractor
		Annexure 4: Subcontractors
		Annexure 5: Suppliers
		Annexure 6: Contractor's Company Organization Chart
		Annexure 7: Contractor's Project Organization Chart
		Annexure 8: QA/QC Procedure
VOLUME 9	13	Annexure 9: Utilization of National Products & National Origin
		Annexure 10: Contractor's General Information
		Annexure 11: List of Customers and Projects
		Annexure 12: List of Current Commitment
VOLUME10	14	Appendix F Drawings
	15	Appendix G Material Equipment Supplied by KAHRAMAA
	16	Appendix H Contract Execution Plan
		1. Programme of Work
		2. Method Statement
VOLUME 15 11/15	**17**	**Appendix I Materials Supplied by the Contractor**
VOLUME 16/17	18	Appendix J General Safety Requirements
	19	Appendix K Departure from or Qualification to the Specification
VOLUME 18	20	Acknowledgement of Receipt of Tender Documents
		Circulars No. 1 to 21
VOLUME 19	21	Commercial Offer BOQ
		Pre Award Correspondence
		Minutes of Pre-Award Meeting

SECTION-C:ANNEXURES

C.1 SYSTEM CONFIGURATION

Annexure-1

Schneider Electric

Gulf Solution Center

Medium Voltage and Low Voltage Drives

Supply of MV & LV VFDs

Non-Binding Proposal

Schneider Electric the global specialist in energy management

OFFER FOR Contractors

Sales Manager	PM-Tender	Approver
Yarob Alkassar	Boogie Varghese	Someet Ahuja

CONTENTS

1 TECHNICAL OFFER 3
1.1 BASIS OF OFFER *3*
1.2 MEDIUM VOLTAGE VARIABLE SPEED DRIVES (6.6kV) *4*
1.3 CONTENTS OF TECHNICAL OFFER *8*
1.4 STANDARDS AND REGULATIONS *10*
1.5 BENEFITS OF ATV1200 TECHNOLOGY *11*
1.6 CONTROL FEATURES – KEY FUNCTIONS *14*
1.7 STANDARD INTERFACE DIAGRAM *16*
1.8 EXCLUSIONS *17*
1.9 ASSUMPTIONS, CLARIFICATIONS AND DEVIATIONS *18*
1.10 LOW VOLTAGE VARIABLE SPEED DRIVES (400 V) *19*

1 TECHNICAL OFFER

1.1 BASIS OF OFFER

Our offer is only based on the following quantities and ratings for the various packages and technical specifications in subsequent sections:

ITEM	Location	Drive Type	Description	Qty
1	PRPS at Umm Birka	MV (ATV1200-A1550-6666A5S)	1050 kW*[1], 6.6kV, HV VFD	5
		LV (ATV61EXC5C80YH)	700 kW*[1],400V, LV VFD	4
2	PRPS at Umm Salal	MV (ATV1200-A3200-6666A5S)	2200 kW, 6.6kV, HV VFD	8
		LV (ATV61EXC5C63YH)	550 kW,400V, LV VFD	4
3	PRPS at Al Thumama	MV (ATV1200-A1550-6666A5S)	1050 kW, 6.6kV, HV VFD	5
		LV (ATV61EXC5C80YH)	700 kW,400V, LV VFD	5*[2]
4	PRPS at Rawdat Rashed	MV (ATV1200-A1715-6666A5S)	1200 kW, 6.6kV, HV VFD	5
		LV (ATV61EXC5C63YH)	500 kW,400V, LV VFD	4
5	PRPS at Abu Nakhla	MV (ATV1200-A3200-6666A5S)	2200 kW, 6.6kV, HV VFD	9
		LV (ATV61EXC5C40YH)	350 kW,400V, LV VFD	4

*** NOTE:**

1. **Ratings considered as per Bill No. 10 due to discrepancy between various ratings in RFQ documents**
2. **Qty considered as per Bill No. 5 (Bill 10 shows 4 Nos. only)**

1.2 MEDIUM VOLTAGE VARIABLE SPEED DRIVES (6.6kV)

1.2.1 MAIN DATA AND ASSUMPTIONS

Our offer is only based on the following main data which shall be confirmed by the customer before starting the production.

ATV1200-A1550-6666A5S			
Considered Environment			
	Indoor temperature	°C	45
	Humidity	%	95%
	Altitude	m	1000
Considered Motor Parameters			
	Motor type	Asynch. squirel cage	
	Nominal voltage	V	6,600
	Nominal power	kW	1,050
	Nominal current	A	114
	Nominal speed	rpm	1,480
	Nominal frequency	Hz	50
Considered load characteristics			
	Load type	Pump	
	Torque profil	Variable	
	Considered nominal Torque at nominal speed	Nm	6,778
	Overload 1min each 10 min	%	120
	Inertia	kgm²	NA
	Acceleration time - Deceleration time	s	NA NA
	Speed range - Minimum - Maximum	%	50 100
	Considered acceleration - deceleration Torque f(inertia)	Nm	NA NA
	Total considered Torque (load + acceleration f(inertia))	Nm	6,778
Selected Drive			
	Type	ATV1200-A1550-6666A5S	
	Converter type	MV Multilevel IGBT VSI	
	Reaction on network side	Pulse	36
	Input rated voltage	V	6600
	Input type	3 phase	
	Input frequency	50 / 60 +/- 5%	
	Short Circuit withstand	kA/150ms	31.5
	Inverter control	PWM digital	
	Output voltage range	V	6600
	Output type	3 phase	
	Output frequency range	0,2 Hz - 120 Hz for V/F & 0,2 Hz to 70 Hz for vector	
	Output rated frequency	50 / 60	
	Nominal current for 40°C & 1000m without derating	A	**135**
	Nominal available current according to site conditions and derating	A	**122**
	Overload current for 40°C & 1000m without derating (1min / 10min)	A	**162**
	Maxi. available current according to site conditions and derating (1min / 10min)	A	**146**
	Efficiency at rated power, inverter and transformer	0.96	
	Line side power factor from 20% to 100% of speed	≥ 0,96	
	Motor speed feedback (Encoder)	not provided	
	Motor control mode	V/Hz (scalar) or sensorless vector control	
	Quadrants of operation	1 or 2 quadrants	
	Braking mode	none	

	Output current THD	<2% without filter	
	Preliminary dimensions not including extra cubicles	mm	3960x1500x2670
	Preliminary Weight not including extra cubicles	kg	5500
	Protection degree	IP	42
	Painting colour / cycle	RAL 7032	
	Accessibility	Front	
	Minimum space on the top	500 mm	
	Cable inlet / outlet	bottom / bottom	
	Max. motor feeding cable length	up to 500 m without output filter	
	Noise level	dBA	< 80 @ 1m
	Cooling system	Air	
	Cooling system	m3/h	16500
	Integrated input dry Transformer / Power cell		
	Number of power cell per phase	6	
	Transformer Input Voltage	V	6600
	Voltage per secondary	V	700
	Secondaries number	18	
	Protection degree	IP	42
	Cooling system	Air	
	Power	kVA	1550

	ATV1200-A3200-6666A5S		
	Considered Environment		
	Indoor temperature	°C	45
	Humidity	%	95%
	Altitude	m	1000
	Considered Motor Parameters		
	Motor type	Asynch. squirel cage	
	Nominal voltage	V	6,600
	Nominal power	kW	2,200
	Nominal current	A	238
	Nominal speed	rpm	1,480
	Nominal frequency	Hz	50
	Considered load characteristics		
	Load type	Pump	
	Torque profil	Variable	
	Considered nominal Torque at nominal speed	Nm	14,202
	Overload 1min each 10 min	%	120
	Inertia	kgm²	NA
	Acceleration time - Deceleration time	s	NA NA
	Speed range - Minimum - Maximum	%	50 100
	Considered acceleration - deceleration Torque f(inertia)	Nm	NA NA
	Total considered Torque (load + acceleration f(inertia))	Nm	14,202
	Selected Drive		
	Type	ATV1200-A3200-6666A5S	
	Converter type	MV Multilevel IGBT VSI	
	Reaction on network side	Pulse	36
	Input rated voltage	V	6600
	Input type	3 phase	
	Input frequency	50 / 60 +/- 5%	
	Short Circuit withstand	kA/150ms	31.5
	Inverter control	PWM digital	
	Output voltage range	V	6600
	Output type	3 phase	

	Output frequency range	0,2 Hz - 120 Hz for V/F & 0,2 Hz to 70 Hz for vector	
	Output rated frequency	50 / 60	
	Nominal current for 40°C & 1000m without derating	A	**280**
	Nominal available current according to site conditions and derating	A	**252**
	Overload current for 40°C & 1000m without derating	A	**336**
	Maxi. available current according to site conditions and derating	A	**302**
	Efficiency at rated power, inverter and transformer	0.96	
	Line side power factor	≥ 0,96	
	Motor speed feedback (Encoder)	not provided	
	Motor control mode	V/Hz (scalar) or sensorless vector control	
	Quadrants of operation	1 or 2 quadrants	
	Braking mode	none	
	Output current THD	<2% without filter	
	Preliminary dimensions not including extra cubicles	mm	**5170x1700x2740**
	Preliminary Weight not including extra cubicles	kg	**8700**
	Protection degree	IP	**42**
	Painting colour / cycle	RAL 7032	
	Accessibility	Front	
	Minimum space on the top	500 mm	
	Cable inlet / outlet	bottom / bottom	
	Max. motor feeding cable length	up to 500 m without output filter	
	Noise level	dBA	< 80 @ 1m
	Cooling system	Air	
	Cooling system	m3/h	**43200**
	Integrated input dry Transformer / Power cell		
	Number of power cell per phase	6	
	Transformer Input Voltage	V	**6600**
	Voltage per secondary	V	**700**
	Secondaries number	18	
	Protection degree	IP	**42**
	Cooling system	Air	
	Power	kVA	**3200**

	ATV1200-A1715-6666A5S		
	Considered Environment		
	Indoor temperature	°C	**45**
	Humidity	%	**95%**
	Altitude	m	**1000**
	Considered Motor Parameters		
	Motor type	Asynch. squirel cage	
	Nominal voltage	V	**6,600**
	Nominal power	kW	**1,200**
	Nominal current	A	**130**
	Nominal speed	rpm	**1,480**
	Nominal frequency	Hz	**50**
	Considered load characteristics		
	Load type	Pump	
	Torque profil	Variable	
	Considered nominal Torque at nominal speed	Nm	**7,747**
	Overload 1min each 10 min	%	**120**
	Inertia	kgm²	**NA**
	Acceleration time - Deceleration time	s	**NA NA**
	Speed range - Minimum - Maximum	%	**50 100**
	Considered acceleration - deceleration Torque f(inertia)	Nm	**NA NA**

	Total considered Torque (load + acceleration f(inertia))	Nm	7,747
Selected Drive			
	Type	ATV1200-A1715-6666A5S	
	Converter type	MV Multilevel IGBT VSI	
	Reaction on network side	Pulse	36
	Input rated voltage	V	6600
	Input type	3 phase	
	Input frequency	50 / 60 +/- 5%	
	Short Circuit withstand	kA/150ms	31.5
	Inverter control	PWM digital	
	Output voltage range	V	6600
	Output type	3 phase	
	Output frequency range	0,2 Hz - 120 Hz for V/F & 0,2 Hz to 70 Hz for vector	
	Output rated frequency	50 / 60	
	Nominal current for 40°C & 1000m without derating	A	**150**
	Nominal available current according to site conditions and derating	A	**135**
	Overload current for 40°C & 1000m without derating	A	**180**
	Maxi. available current according to site conditions and derating	A	**162**
	Efficiency at rated power, inverter and transformer	**0.96**	
	Line side power factor	≥ 0,96	
	Motor speed feedback (Encoder)	not provided	
	Motor control mode	V/Hz (scalar) or sensorless vector control	
	Quadrants of operation	1 or 2 quadrants	
	Braking mode	none	
	Output current THD	<2% without filter	
	Preliminary dimensions not including extra cubicles	mm	3960x1500x2740
	Preliminary Weight not including extra cubicles	kg	5800
	Protection degree	IP	42
	Painting colour / cycle	RAL 7032	
	Accessibility	Front	
	Minimum space on the top	500 mm	
	Cable inlet / outlet	bottom / bottom	
	Max. motor feeding cable length	up to 500 m without output filter	
	Noise level	dBA	< 80 @ 1m
	Cooling system	Air	
	Cooling system	m3/h	29900
Integrated input dry Transformer / Power cell			
	Number of power cell per phase	6	
	Transformer Input Voltage	V	6600
	Voltage per secondary	V	700
	Secondaries number	18	
	Protection degree	IP	42
	Cooling system	Air	
	Power	kVA	1715

1.2.2 Standards and Applicable Documents

Standards - IEC 61800-4, IEE 519.1992
Applicable documents - This document including the proposed assumptions and exclusions and SE MV VSD Datasheet.

1.2.3 Important Note

Drive installation has to be free from harsh and aggressive environment such as inflammable gas, corrosive gas, explosive gas and dust

1.2.4 Standard Options Included in each ITEM:

Standard Options included in each ITEM	Qty
Motor winding and bearing over temperature management (RTD module for upto 8-PT100)	1
Cubicle Space Heater	1
76 dB Noise silencer on top	1

1.3 CONTENTS OF TECHNICAL OFFER

1.3.1 ATV 1200 general description

Type	ATV 1200
Brief description	Medium Voltage Drive System with multi-pulse transformer and low voltage inverter cascade provides a sinusoidal sine wave at both input and output with low THD(i).
Power ranges	315 ... 16200 kVA
Voltage ranges	2.4 kV *on request* 3.3 kV 4.16 kV 5.5 / 6.0 kV 6.3 / 6.6 kV 10 kV 11 kV *on request*
Output frequency	0.5 ... 120 Hz for V/f characteristic 0.5 ... 70 Hz for vector control
Control method	V/f characteristic, flux vector control sensorless flux vector control closed-loop control with encoder
Interfaces	10 inch LCD touch screen as operating panel in the enclosure door, I/O ports analog logic, Connection via Modbus, Modbus TCP, Ethernet IP, Profibus or DeviceNet
Protection degree	IP31 design of the enclosure IP41 enclosure design optional available IP42 enclosure design optional available

1.3.2 ATV 1200 General Presentation

1.3.2.1 Introduction

- Altivar 1200 Medium Voltage Drive System is designed with high reliability, easy to use and good performance.
- The Altivar 1200 can be applied to three-phase medium-voltage asynchronous motors (sensor/sensorless vector control mode) as well as synchronous motors (V/f mode).
- With the latest low voltage IGBT type, our drive can be used in applications which need higher precision requirements and provide an high level of efficiency.

1.3.2.2 Benefits/ Features

- Size reduction on the footprint thanks to combined cabinet.
- Front access enables an easy access to the control and transformer cabinet. It makes the installation and maintenance operations easier to save time.
- Certified IP31, IP41 & IP42 cabinet (even on top cooling fans)
- The ATV1200 proposes high performance in the standard execution offering comfort and reliability such as:
  - Protection: Interlocks system (according to customer requirements), special tool to open the door is needed, power off signal, handle lock
  - Comfort: Large 10" HMI, new easy software configuration, internal lighting, free I/O)
  - Availability: UPS
- CE marking

1.3.2.3 Multilevel Technology

- Flexibility: This technology enables to operate very old direct on line motors without additional components. It allows to achieve significant energy saving as well as a quick return on investment.

1.3.2.4 Improve OPEX and CAPEX

Input Waveform

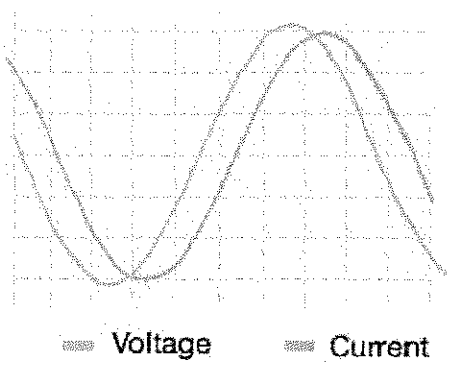

Output Waveform

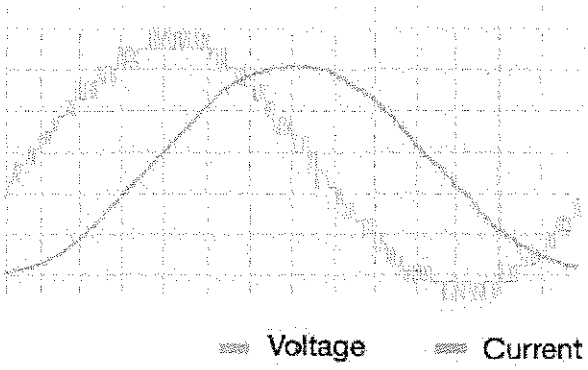

- **Low THDI on the network side**

  - Harmonics distorsion <2% is obtained thanks to the multi-level technology that provides a clean sinusoidal waveform fulfilling major standards. **Better than IEEE 519 requirement.**

- **Low harmonics and low dV/dt on the motor side**

  - The quality of the output voltage creates no stress on motor shaft and terminals avoiding special isolation of the motor
  - Long motor cable - up to 2000m without additional components
  - No special motor cable required
  - Increased motor lifetime due to low dv/dt and voltage steps

1.3.2.5 Efficient Cooling System

- Well arranged sharing of cooling air flow managed only by main cooling fans avoids bottom transformer fans and cooling fans on the electronic compartments.
- Improved Total Drive Efficiency as transformer bottom fans are removed. The energy savings are significant and the drive efficiency is improved by up to 0.3%.

1.3.2.6 Inverter stage

- The drive's inverter is based on a modular architecture using low voltage IGBT which are widely used and proven for its reliability in the industry. The inverter stage is composed with modular that can be removed within a few minutes for maintenance.
- Separated air flow in control cabinet: The conception of the control cabinet avoids any local fans inside the cabinet. The air flow circulates efficiently due to the ATV1200 design to cool down the control cabinet components. It avoids the need of maintenance operation and increase the reliability of the drive.

1.4 STANDARDS AND REGULATIONS

The entire ATV1200 range conforms to international requirements in order to provide efficient and appropriate usage of products by the end user, machine manufacturer or system integrator.

1.4.1 Low Voltage Directive

- As declared by the CE mark, the mechanical and electrical design of the Low voltage cabinet (control cabinet) meets the European Directive **LVD 2006/95/EC**.
- IEC with regards to the IEC standards **61800-5-1**.

1.4.2 Electromagnetic Compatibility directive (EMC)

As declared by a Schneider Electric manufacturing certification, qualified testing lab and certification authority, the ATV1200 range fullfills the conformity to electromagnetic directive **EMC 2004/108/EC** with regards to the IEC standards **61800-3**.

1.4.3 Machine Directive

The ATV1200 drive is to be installed as a part of a machine, system or plant. The responsibility of the machine manufacturer or system integrator is involved as it refers to the method of installation. An appropriate usage of products ensures the compliance to the machine directive with regards to the IEC standards **61800-5-1, 60204-1, 60204-11**. Drive operation remains totally prohibited without prior establishment of conformity by the machine manufacturer or integrator.

1.5 BENEFITS OF ATV1200 TECHNOLOGY

1.5.1 Drive Topology

- Its simple two level power cell design takes away the complexity of multilevel architecture and makes it into a clear and easy understandable technology. This saves your maintenance cost because the crew will easily understand Altivar 1200.
- The core component of ATV1200 is the "Power cell". This "Power cell" is a single phase, two level output switching device, supplied by a 700V low voltage winding of a transformer.
- The big advantage of this is, that the switching elements are state-of-the-art LV components. By putting this AC - supplies in series, higher voltages are achieved. The number of "Power cells" determines the output voltage. Every cell provides a small step of motor supply, resulting in a smooth waveform. Phase shifting can be done on the secondary windings of transformer, allowing an elimination of harmonics of input.
- The cells create the right part of the drive and the transformer the left section of the drive. The drives regulation system and control is installed in front of the drive to provide an optimized footprint. The transformer and cell section can be separated for easy installation. Adequate cooling fans on top of the panel are supplied by additional secondary windings of the integrated transformer. This avoids additional 3phase supplies for the drive.
- Schneider Electric offers this transformer in a standard efficiency as well as in increased high efficiency.

  - *Easy understandable multilevel architecture saves money in case of maintenance*
  - *Less spare parts because only one power cell design is needed for the whole drive*
  - *Smooth output voltage because each power cell provides only a small step of the voltage*

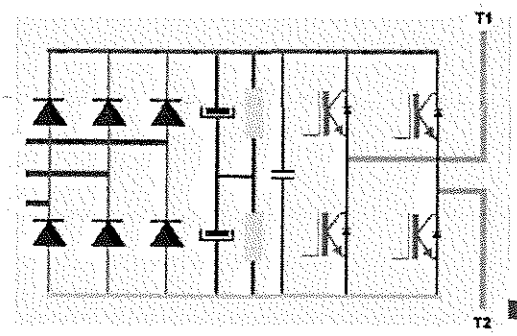

Power Cell

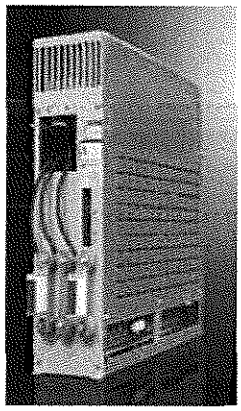

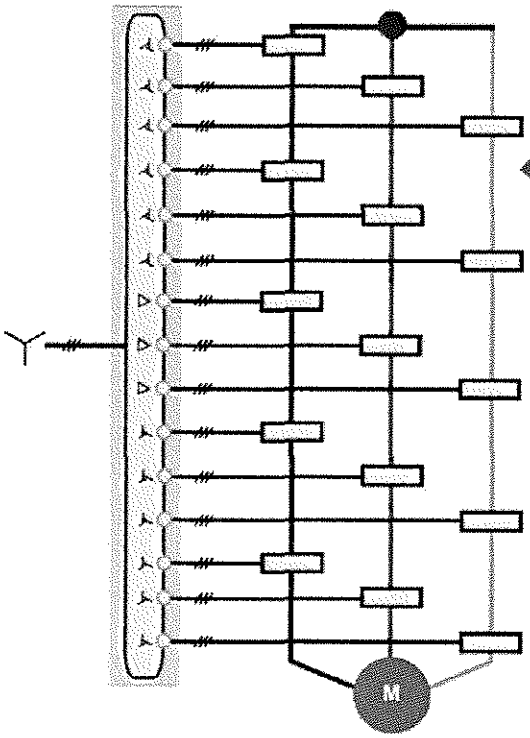

Multi-Level Architecture

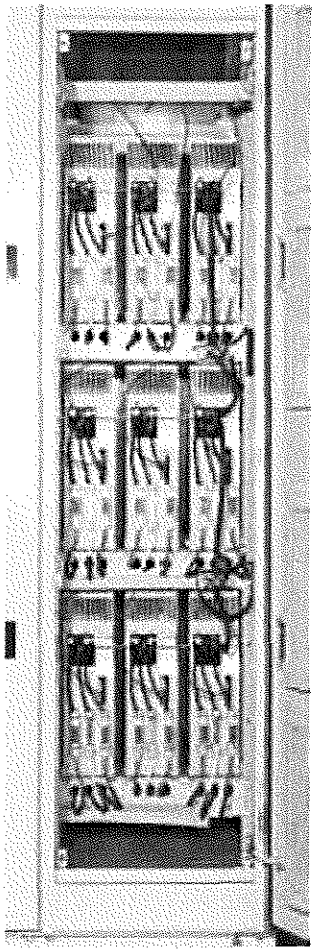

Power Cells Cabinet

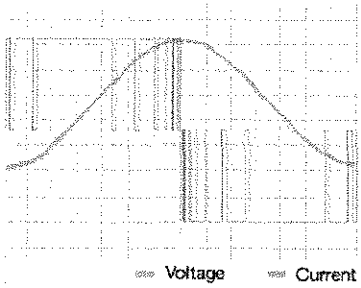

Output Waveform of a single power cell

- *Clear arrangement of components helping your team in maintenance and service*
- *Compact and low weight cell design saving maintenance shutdown time*
- *Easier installation to save time*
- *Space optimized dimensions without squeezing components in small compartments, granting you a very long lifetime avoiding any hot spot inside the system*
- *The integrated transformer and multilevel structure helps to avoid bearing currents in existing motors. This results in a capability to run your very old motor*

1.5.2 Cooling System Concept

1.5.2.1 Air Cooling System General Presentation

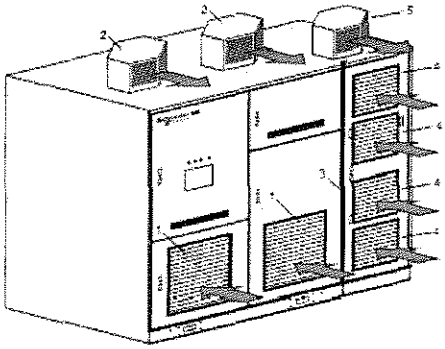

1.....Air inlet grid for transformer cabinet
2.....Air outlet with fans
3.....Guided air flow to avoid internal air short-circuit between transformer and power cell cabinet
4.....Air inlet grid for power cell cabinet
5.....Air outlet with fans

1.5.2.2 Detail of the Input Transformer Cooling System

- Innovative transformer design with optimized cooling arrangement without the need of additional bottom blowers, keeping maintenance costs very low and increasing the availability due to reduced number of fans. A reduced number of fans in ATV1200 also improves the total efficiency. Small fans should be avoided.

- The bottom transformer blowers are replaced by an innovative air duct system for a better cooling system. The airflow circulation inside the transformer cabinet becomes more efficient avoiding hotspots. This increases the transformer lifetime.

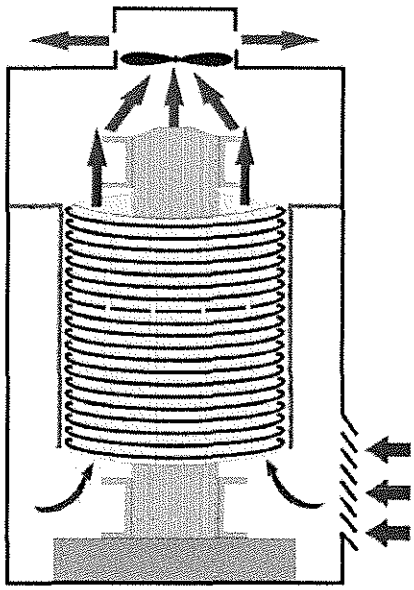

1.6 CONTROL FEATURES – KEY FUNCTIONS

1.6.1 Control Features

Friendly and easy-to-use interface with LCD touch-screen. Windows arrangement to guide you in few touches to the required result.

- Motor control mode : V/f control, sensor/sensorless flux vector control, closed-loop control with encoder
- Number of quadrant: 2Q
- Steady operation :
  - Speed precision in steady state: ±0.5%
  - Closed-loop speed precision: ±0.1%
- Protection : Overcurrent, overvoltage, undervoltage, controller shutdown, cooling fan stop, overload, overtemperature, communication interruption, ground fault, phase lose
- Interface
  - 10 inch large LCD touch-screen
  - Visual land audible alarm for drive status
- Communication
  - Modbus, Modbus TCP, Ethernet IP, Profibus or DeviceNet
- PID function
  - Integrated PID regulator, and parameters can be set
- I/O function
  - I/O ports can be expanded according to user's requirements
- Operation mode
  - Local / remote
- Frequency setting
  - Manual operation, analogue/digital reference setting
- Human-Machine interface display : Output frequency, voltage, current, power and input voltage, current, power, power factor, parameters setting, voltage and current waveform, transformer temperature, drive status and records.

1.6.2 Key Functions

- Soft start function (including synchronization and bypass)
- Multi pump (cascade mode)
- Multi motors control (cascade motors)
- Catch on fly (low and high inertia)
- Simulation mode for commissioning
- Master slave function up to 3 drives (1 master, 2 slaves)
- Speed synchronized control (load sharing)
- Motor autotuning
- Auto restart (after input voltage drop)

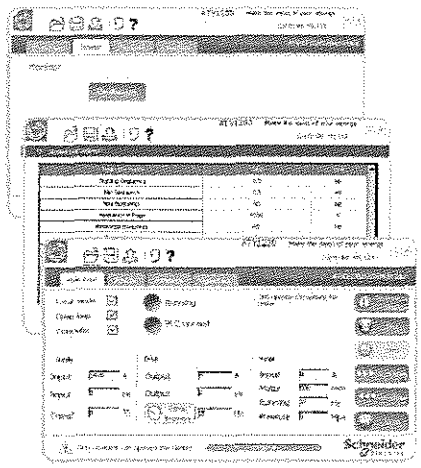

Intuitive windows arrangement

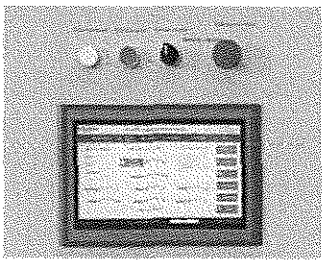

Friendly user interface

1.6.3 Key Figures

MTBF (medium time between failures)	h	> 50 000
MTTR (medium time to repair)	min	30
MTBM (medium time between maintenance)	months	6

1.6.4 Available Input/ Output

	Standard	Option	
DI	**6**	+4	
DO	**8**	+4	
AI	**4**		**Isolator for AI & AO**
AO	**2**	+2	

ATV 1200 is delivered with native MODBUS Interface

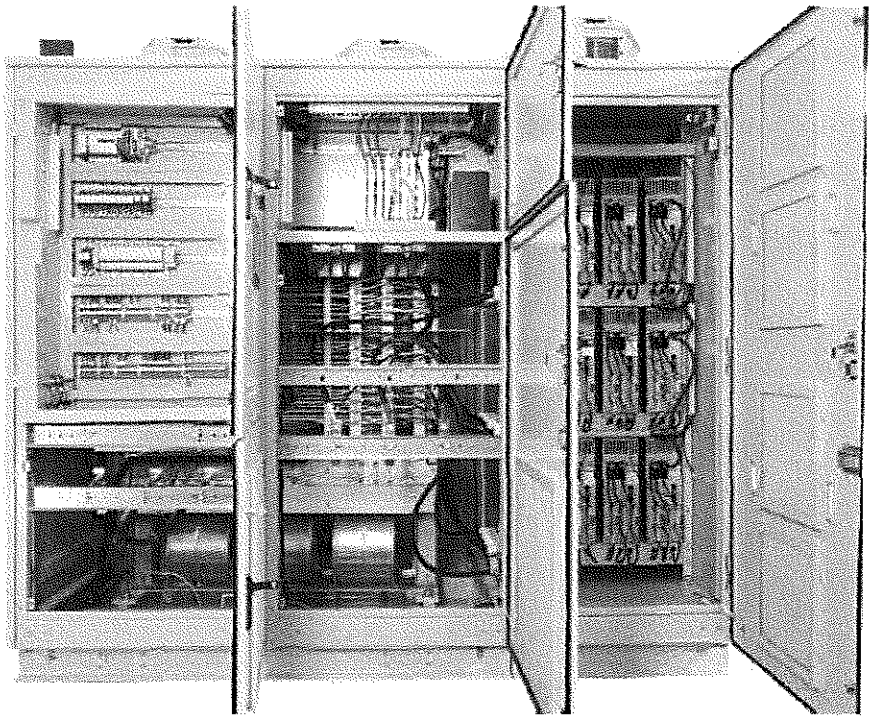

ATV 1200 : A simple, Efficient and reliable MV Drive system

Innovative design for **Very small footprint**
Innovative integrated top cooling fan supply
Well-equipped as a standard: UPS, LS, lightening, Security screw, door locks...

Easy Front access design for **Control** & **Transformer** maintenance
Combined Control & **Transf.** cabinet
Separated airflow **cooling**
Reliable & **Simple** design Inverter stage
Modular inverter stage cubicle **for fast maintenance**

1.7 STANDARD INTERFACE DIAGRAM

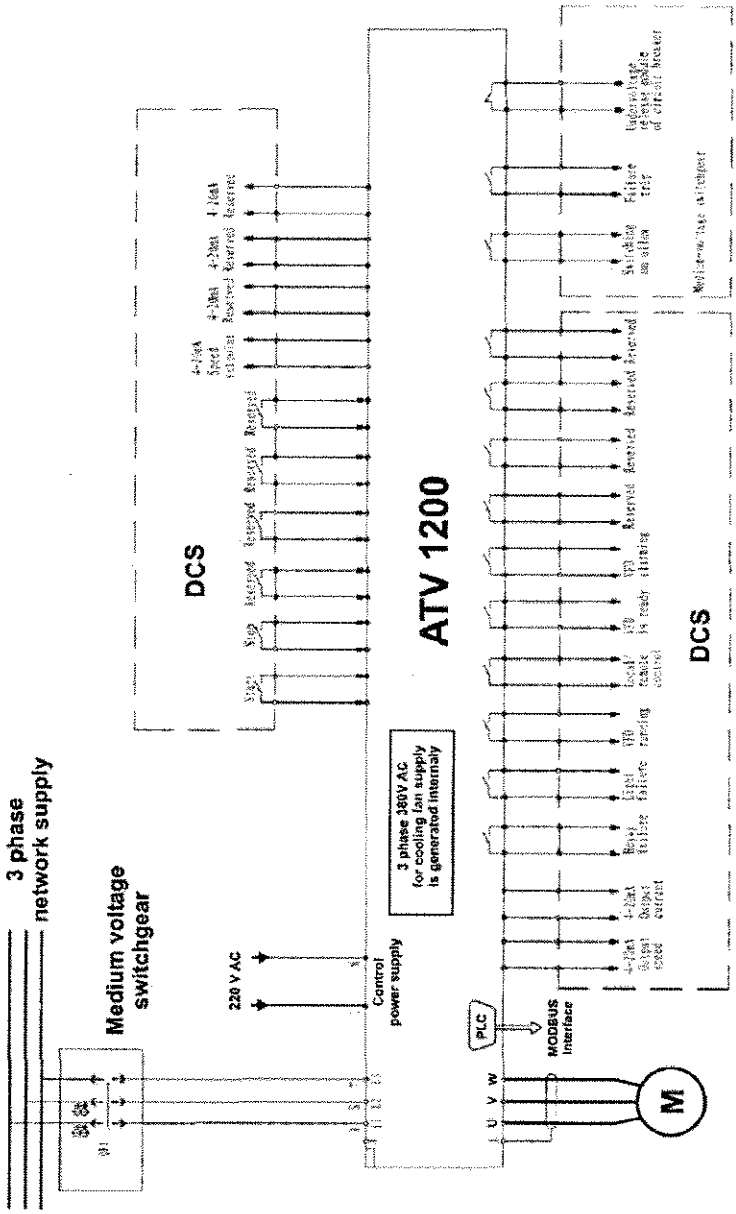

1.7.1.1 DOCUMENTATION

Standard drawing submittal program in **English.**

1.8 EXCLUSIONS

In addition to whatever not expressly mentioned in this technical description, all the following materials or activities are excluded from the base scope of supply:

Not Included	**Material or Activities**
X	HV Switchgears and HV Protection
x	AC Motors
X	Braking chopper - Regenerative braking
X	Output sinus filter
X	VSD System external connections to the Plant by means of cables, bus bars, pipes
X	Power cables, control cables, shielded cables
X	Fire Extinguishing System
X	Cables external conveyances
X	Other Programmable Logic Control (PLC) and relevant I/O interfaces
X	Control desk, Motor control station and remote control equipment
X	Strain gauges and transducers for process control
X	Soleplates and fixing bolts
X	All tests different from our factory standards not clearly stated in this Technical Specification
X	Type tests, string tests, witness tests, special tests
X	Special tests and Performance tests
X	Start-up and commissioning
X	Erection/Installation, Commissioning and site tests
X	Assistance of Schneider personnel for on-site tests and activities
X	Specific studies for harmonic and Power factor calculation
X	MV or LV Harmonic compensation system
X	MV or LV Power factor compensation system
X	MTBF, MTBM, MTTR calculations
X	Torsional analysis
X	Specific Mechanical and electrical design different from those describe in this technical specification
X	Modification of our standard design
X	Any other equipment necessary for system operation
X	Training
X	Spare parts for Commissioning and Maintenance
X	Manual language different from English
X	Reference Standards different from those listed in this technical specification
X	Seaworthy packing - Packing different from Schneider standard
X	Transport
X	Receiving, unloading, handling and storage at site
X	Our scope of supply is limited to the BOQ items listed in Section 1.1. Please note that supply/installation of any additional material is excluded from our scope and same shall be considered as variations.
X	Our offer shall be EXW Factory; Any local taxes, custom duty, forwarding charges, clearance and documentation from factory to site are excluded from our scope.

1.9 ASSUMPTIONS, CLARIFICATIONS AND DEVIATIONS

At this stage, only our standard offer is considered. In case of revision of the numbers or ratings of the VFDs and/or any special requirement/ specification that is not mentioned in our offer, we shall revise our technical proposal and may have commercial impact.

1.10 LOW VOLTAGE VARIABLE SPEED DRIVES (400 V)

1.10.1 LV VFD Technical description

1.10.1.1 ATV61EXC5C40YH frequency inverter in cubicle IP54 (compact version) as "Low Harmonic Drive", including active rectifier bridge (AFE - Active Front End)

Technical data:

Mains system:	6 pulse supply / TN-C or TN-S mains without neutral
Mains supply voltage:	3 AC 690V ± 10%
Mains frequency:	50 / 60 Hz ± 5 %
Rated motor power:	360 kW (10% derating due to T=50°C)
Continuous output current:	378 A (10% derating due to T=50°C)
Maximum current:	120 % for 60 sec. once in 10 min.
Output voltage:	3 AC 0...100% mains voltage, dynamic voltage stabilization
Output frequency:	0...500 Hz
Coolant temperature:	-10 ... +40°C

Cubicle version includes:

- Cubicle SAREL Spacial SF	Design of cubicle: RAL 7035 Design of plinth: RAL 7022
- Dimensions HxWxD	approx. 2460x2000x600 mm (incl. plinth)
- Protection degree IP54	
- Cooling:	Forced cooled cubicle Air inlet through filtered inlet grids in the cubicle door, Air outlet through cubicle roof via fan module
- Cubicle heater	supplied by external source (230V/50Hz)

Power unit:
- Mains connection via load break switch
- 3-pole load break switch with door handle (switchable from cubicle's outside)
- NH semiconductor fuses (tripping characteristic aR)
- Clean Power Filter with integrated EMC filter and line contactor
- Line Filter Choke
- Active Infeed Converter
- Frequency Inverter unit
- Motor terminals

Control unit:

- Fan voltage	400V 3AC via internal three-phase transformer
- Control voltage	230VAC via center tapping
- Motor protection	3 x PTC connected to the inverter
- Emergency stop button	incl. terminals to link an external safety circuit PL c acc. to EN/ISO13849-1; SIL 1 acc. to IEC/EN 61508 Stop Cat. 0 according to IEC/EN 60204-1
- Cubicle lighting incl. power socket	supplied by external source (230V/50Hz)

- Automatic fan control (fan interruption) controlled via switch "Cubicle Fans Off / Auto"

Local control and indication:
- Graphic display terminal with protection door, mounted into the cubicle door
- Emergency stop button
- Switch "Hand / Off / Auto" plus push buttons green ("Start") and red ("Stop")
- LEDs green ("Run") and red ("Fault")
- Switch "Heater Off / Auto"

Operating and signal exchange in Remote-Mode (customized remote terminals):

- Logic Inputs:	5 inputs, 1 universal input (LI/PTC), 1 power removal
- Logic Outputs:	1 change-over contact, 1 closing contact
- Analogue Inputs:	1 voltage input (V), 1 universal input (V / mA)
- Analogue Outputs:	1 current output (mA)

Remarks:
- The cable length for the PTC, connected directly to inverter terminal LI6, is limited to 20 meters.
- Wire- and cable labeling not included by default (only on request)
- This drive system regenerates electric energy back to the mains (4 quadrant operation).
- The THDi (Total Harmonic Distortion of Current) will decrease to approx. 4% or less.

1.10.1.2 ATV61EXC5C63YH frequency inverter in cubicle IP54 (compact version) as "Low Harmonic Drive", including active rectifier bridge (AFE - Active Front End)

Technical data:

Mains system:	6 pulse supply / TN-C or TN-S mains without neutral
Mains supply voltage:	3 AC 690V ± 10%
Mains frequency:	50 / 60 Hz ± 5 %
Rated motor power:	567 kW (10% derating due to T=50°C)
Continuous output current:	607 A (10% derating due to T=50°C)
Maximum current:	120 % for 60 sec. once in 10 min.
Output voltage:	3 AC 0...100% mains voltage, dynamic voltage stabilization
Output frequency:	0...500 Hz
Coolant temperature:	-10 ... +40°C

Cubicle version includes:

- Cubicle SAREL Spacial SF	Design of cubicle: RAL 7035 Design of plinth: RAL 7022
- Dimensions HxWxD	approx. 2460x3200x600 mm (incl. plinth)
- Protection degree IP54	
- Cooling:	Forced cooled cubicle Air inlet through filtered inlet grids in the cubicle door, Air outlet through cubicle roof via fan module
- Cubicle heater	supplied by external source (230V/50Hz)

Power unit:
- Mains connection via load break switch
- 3-pole load break switch with door handle (switchable from cubicle's outside)
- NH semiconductor fuses (tripping characteristic aR)
- Clean Power Filter with integrated EMC filter and line contactor
- Line Filter Choke
- Active Infeed Converter
- Frequency Inverter unit
- Motor terminals

Control unit:

- Fan voltage	400V 3AC via internal three-phase transformer
- Control voltage	230VAC via center tapping
- Motor protection	3 x PTC connected to the inverter
- Emergency stop button	incl. terminals to link an external safety circuit PL c acc. to EN/ISO13849-1; SIL 1 acc. to IEC/EN 61508 Stop Cat. 0 according to IEC/EN 60204-1
- Cubicle lighting incl. power socket	supplied by external source (230V/50Hz)

- Automatic fan control (fan interruption) controlled via switch "Cubicle Fans Off / Auto"

Local control and indication:
- Graphic display terminal with protection door, mounted into the cubicle door
- Emergency stop button
- Switch "Hand / Off / Auto" plus push buttons green ("Start") and red ("Stop")
- LEDs green ("Run") and red ("Fault")
- Switch "Heater Off / Auto"

Operating and signal exchange in Remote-Mode (customized remote terminals):

- Logic Inputs:	5 inputs, 1 universal input (LI/PTC), 1 power removal
- Logic Outputs:	1 change-over contact, 1 closing contact
- Analogue Inputs:	1 voltage input (V), 1 universal input (V / mA)
- Analogue Outputs:	1 current output (mA)

Remarks:
- The cable length for the PTC, connected directly to inverter terminal LI6, is limited to 20 meters.
- Wire- and cable labeling not included by default (only on request)
- This drive system regenerates electric energy back to the mains (4 quadrant operation).
- The THDi (Total Harmonic Distortion of Current) will decrease to approx. 4% or less.

1.10.1.3 ATV61EXC5C63YH frequency inverter in cubicle IP54 (compact version) as "Low Harmonic Drive", including active rectifier bridge (AFE - Active Front End)

Technical data:

Mains system:	6 pulse supply / TN-C or TN-S mains without neutral
Mains supply voltage:	3 AC 690V ± 10%
Mains frequency:	50 / 60 Hz ± 5 %
Rated motor power:	567 kW (10% derating due to T=50°C)
Continuous output current:	607 A (10% derating due to T=50°C)
Maximum current:	120 % for 60 sec. once in 10 min.
Output voltage:	3 AC 0...100% mains voltage, dynamic voltage stabilization
Output frequency:	0...500 Hz
Coolant temperature:	-10 ... +40°C

Cubicle version includes:

- Cubicle SAREL Spacial SF	Design of cubicle: RAL 7035 Design of plinth: RAL 7022
- Dimensions HxWxD	approx. 2460x3200x600 mm (incl. plinth)
- Protection degree IP54	
- Cooling:	Forced cooled cubicle Air inlet through filtered inlet grids in the cubicle door, Air outlet through cubicle roof via fan module
- Cubicle heater	supplied by external source (230V/50Hz)

Power unit:
- Mains connection via load break switch
- 3-pole load break switch with door handle (switchable from cubicle's outside)
- NH semiconductor fuses (tripping characteristic aR)
- Clean Power Filter with integrated EMC filter and line contactor
- Line Filter Choke
- Active Infeed Converter
- Frequency Inverter unit
- Motor terminals

Control unit:

- Fan voltage	400V 3AC via internal three-phase transformer
- Control voltage	230VAC via center tapping
- Motor protection	3 x PTC connected to the inverter
- Emergency stop button	incl. terminals to link an external safety circuit PL c acc. to EN/ISO13849-1; SIL 1 acc. to IEC/EN 61508 Stop Cat. 0 according to IEC/EN 60204-1
- Cubicle lighting incl. power socket	supplied by external source (230V/50Hz)

- Automatic fan control (fan interruption) controlled via switch "Cubicle Fans Off / Auto"

Local control and indication:
- Graphic display terminal with protection door, mounted into the cubicle door
- Emergency stop button

- Switch "Hand / Off / Auto" plus push buttons green ("Start") and red ("Stop")
- LEDs green ("Run") and red ("Fault")
- Switch "Heater Off / Auto"

Operating and signal exchange in Remote-Mode (customized remote terminals):

- Logic Inputs:	5 inputs, 1 universal input (LI/PTC), 1 power removal
- Logic Outputs:	1 change-over contact, 1 closing contact
- Analogue Inputs:	1 voltage input (V), 1 universal input (V / mA)
- Analogue Outputs:	1 current output (mA)

Remarks:
- The cable length for the PTC, connected directly to inverter terminal LI6, is limited to 20 meters.
- Wire- and cable labeling not included by default (only on request)
- This drive system regenerates electric energy back to the mains (4 quadrant operation).
- The THDi (Total Harmonic Distortion of Current) will decrease to approx. 4% or less.

1.10.1.4 ATV61EXC5C63YH frequency inverter in cubicle IP54 (compact version) as "Low Harmonic Drive", including active rectifier bridge (AFE - Active Front End)

Technical data:

Mains system:	6 pulse supply / TN-C or TN-S mains without neutral
Mains supply voltage:	3 AC 690V ± 10%
Mains frequency:	50 / 60 Hz ± 5 %
Rated motor power:	720 kW (10% derating due to T=50°C)
Continuous output current:	756 A (10% derating due to T=50°C)
Maximum current:	120 % for 60 sec. once in 10 min.
Output voltage:	3 AC 0...100% mains voltage, dynamic voltage stabilization
Output frequency:	0...500 Hz
Coolant temperature:	-10 ... +40°C

Cubicle version includes:

- Cubicle SAREL Spacial SF	Design of cubicle: RAL 7035 Design of plinth: RAL 7022
- Dimensions HxWxD	approx. 2460x3200x600 mm (incl. plinth)
- Protection degree IP54	
- Cooling:	Forced cooled cubicle Air inlet through filtered inlet grids in the cubicle door, Air outlet through cubicle roof via fan module
- Cubicle heater	supplied by external source (230V/50Hz)

Power unit:
- Mains connection via load break switch
- 3-pole load break switch with door handle (switchable from cubicle's outside)
- NH semiconductor fuses (tripping characteristic aR)
- Clean Power Filter with integrated EMC filter and line contactor
- Line Filter Choke
- Active Infeed Converter
- Frequency Inverter unit
- Motor terminals

Control unit:

- Fan voltage	400V 3AC via internal three-phase transformer
- Control voltage	230VAC via center tapping
- Motor protection	3 x PTC connected to the inverter
- Emergency stop button	incl. terminals to link an external safety circuit PL c acc. to EN/ISO13849-1; SIL 1 acc. to IEC/EN 61508 Stop Cat. 0 according to IEC/EN 60204-1
- Cubicle lighting incl. power socket	supplied by external source (230V/50Hz)

- Automatic fan control (fan interruption) controlled via switch "Cubicle Fans Off / Auto"

Local control and indication:
- Graphic display terminal with protection door, mounted into the cubicle door
- Emergency stop button
- Switch "Hand / Off / Auto" plus push buttons green ("Start") and red ("Stop")
- LEDs green ("Run") and red ("Fault")
- Switch "Heater Off / Auto"

Operating and signal exchange in Remote-Mode (customized remote terminals):

- Logic Inputs:	5 inputs, 1 universal input (LI/PTC), 1 power removal
- Logic Outputs:	1 change-over contact, 1 closing contact
- Analogue Inputs:	1 voltage input (V), 1 universal input (V / mA)
- Analogue Outputs:	1 current output (mA)

Remarks:
- The cable length for the PTC, connected directly to inverter terminal LI6, is limited to 20 meters.
- Wire- and cable labeling not included by default (only on request)
- This drive system regenerates electric energy back to the mains (4 quadrant operation).
- The THDi (Total Harmonic Distortion of Current) will decrease to approx. 4% or less.

1.10.2 Testing

The drives are routine factory tested under load condition, including high voltage test, wiring test and function test.

1.10.3 Documentation

German/English/French in paper form enclosed the product(s). In digital form on request (EPLAN P8, AutoCAD, PDF) free of charge.

1.10.4 Value Proposition – Standard Offer Features

1.10.4.1 Standard factory test:

Before the drive systems leave our factory, the whole equipment get tested carefully and down to the last detail. These tests get performed amongst others described as following...

- Visual check
- Insulation test
- High voltage test
- Wiring check
- Function check
- The test certificate is available in paper form and PDF whenever needed

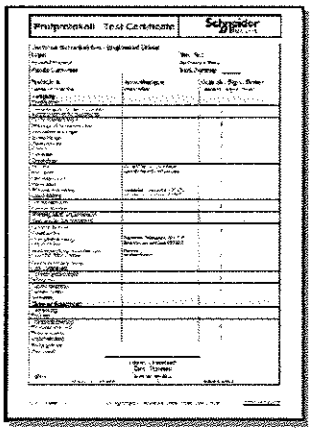

1.10.4.2 Documentation

The drives are supplied with an extensive documentation.

CD (Compact Disc):
The CD (Compact Disc), enclosed the document case, contains of:

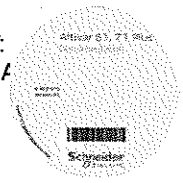

- Catalogue of the various product family of Altivar 61 and A
- Operating instruction manual
- Installation manual
- Programming manual
- several technical support material
- etc...

Cubicle drawing:
The cubicle drawing, enclosed the document case, contains of:

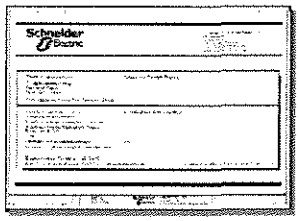

- Cover Sheet
- Table of contents
- Specification Notes
- Circuit Diagram
- Terminal Diagram
- Bill of materials
- Assembly Drawing

Additional documentation:
Depending on the project several additional peripheral devices (insulation monitoringdevice, Pt100-monitoring devices, etc.) may are embedded. The related documentations enclosed the document case.

\+ Documentation available in several languages (De, En, Fr, etc.). Documents available as EPLAN P8, DWG and PDF (on request). Smooth flow for commissioning and maintenance.

1.10.4.3 Ultra rapid semiconductor fuses as inverter protection

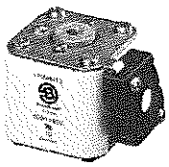

The drive systems are equipped by ultra-rapid semiconductor fuses. This special kind of fuses with tripping characteristic "aR" (ultra-rapid) is especially designed for short circuit protection of semiconductors and protects the frequency inverter in an improbable case of damage against secondary damages.

\+ Optimized protection of the drive against secondary damages. Burned fuses get monitored by the frequency inverter.

1.10.4.4 IP42 Floor-standing enclosure compact:

Power ratings: ~90 ... ~800 kW

Cooling concept:
One common air circuit provides optimum enclosure ventilation, cooling the power section and the control section.

1 Air entry via an intake grille (with filter pads) located on the enclosure door

2 Line choke

3 Fan integrated in the drive for ventilating the power section

4 Separating plate to avoid internal turbulence

5 Air outlet via a metal cover with protection against water splashes, on the enclosure roof

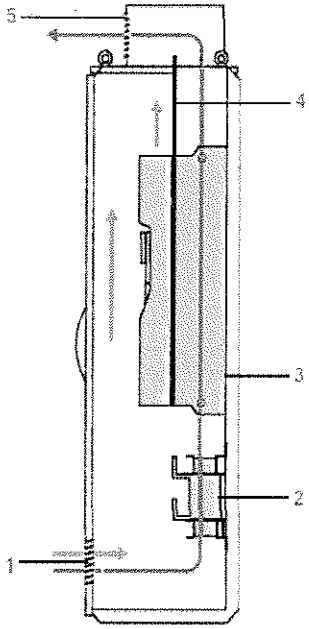

Compact design
All components accessible from the front
Ease maintenance by inverter assembled by slide rails
LCD full text keypad mounted on the cubicle door

1.10.4.5 Motor choke du/dt:

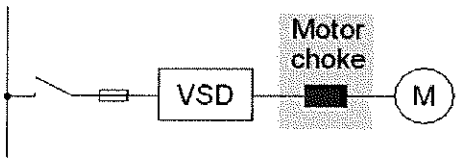

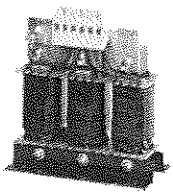

At the output of a voltage source frequency inverter there is a pulsed voltage with a pulse frequency of 2...16 kHz (depending on the device) and a slew rate of more than 10 kV/µs.

The use of the motor choke has significant advantages concerning the trouble-free operation of the drive:

- Decrease of the voltage load of the motor by limiting the du/dt to:
  500 V/µs @ mains supplies of 200...400 V and 380...480 V
  1000 V/µs @ mains supplies of 500...690 V
- Reduce the motor earth leakage current
- Prevention of common mode bearing currents in the motor
- Great reduction of the influences to other cables
- Limits over voltages on the motor terminals, caused by reflections in the motor cable
- By means of the especially developed system the voltage drop at the motor choke is negligible small.

1.10.4.6 Limit of Schneider-Electric Services

1.10.4.6.1 Exclusions

Following Supplies/ Services shall be excluded from our offer

- Supply of any Spare Parts for Startup/ Commissioning or Operation/Maintenance in Base price
- Any kind of Installation & Supervision for Installation, SAT and Commissioning on site.
- Civil engineering structure
- Civil works :
  - ⇨ Building (masonry, painting, tiling, flagstones of covering)
  - ⇨ Any kind of Earthwork (for example but not limited to opening and closing of trench, etc.)
- Earthing sockets or grounding works related to VFDs.
- Remuneration of the possible services of architect, research department, organization of control, etc...
- Unloading of any electrical equipment.
- Any maintenance contract
- Environmental impacts studies
- No other accessories will be supplied other than mention in the VFD data sheet
- Witnessed Routine Tests, Factory Acceptance Testing and Original factory and/or Type and Special Tests
- LV cable lugs, Cable glands, etc
- Cables/wiring between the VFD and the remote equipment
- On-Site Training
- Third party inspection is not in our scope of supply.

1.10.4.6.2 Notes and Assumptions

- In case of revision of the numbers or ratings of the VFDs and/or any special requirement/ specification that is not mentioned in our offer, we shall revise our technical proposal and may have commercial impact.

© Siemens AG 2013

Overview

Transmitter MAG 5000/6000 compact version (left) and 19" insert version (right)

The MAG 5000 and 6000 are transmitters engineered for high performance, easy installation, commissioning and maintenance. The transmitters evaluate the signals from the SITRANS F M sensors type MAG 1100, MAG 1100 F, MAG 3100, MAG 3100 P and MAG 5100 W.

Transmitter types:

- MAG 5000: Max. measuring error ± 0.4 % ± 1 mm/s (incl. sensor)
- MAG 6000: Max. measuring error ± 0.2 % ± 1 mm/s (incl. sensor, see also sensor specifications) and with additional features such as: "plug & play" add-on bus modules; integrated batch functions.

Benefits

- Superior signal resolution for optimum turn down ratio
- Digital signal processing with many possibilities
- Automatic reading of SENSORPROM data for easy commissioning
- User configurable operation menu with password protection.
- 3 lines, 20 characters display in 11 languages.
- Flow rate in various units
- Totalizer for forward, reverse and net flow as well as additional information available
- Multiple functional outputs for process control, minimum configuration with analogue, pulse/frequency and relay output (status, flow direction, limits)
- Comprehensive self-diagnostic for error indication and error logging (see under SITRANS F M diagnostics)
- Batch control (MAG 6000 only)
- Custody transfer approval: PTB, OIML R 117, OIML R 49, MI-001, PTB K 7.2 and OE12/C 040 for chilled water
- MAG 6000 with add-on bus modules for HART, FOUNDATION Fieldbus H1, DeviceNet, Modbus RTU/RS 485, PROFIBUS PA and DP

Application

The SITRANS F M flowmeters are suitable for measuring the flow of almost all electrically conductive liquids, pastes and slurries. The main applications can be found in:

- Water and waste water
- Chemical and pharmaceutical industries
- Food and beverage industries
- Power generation and utility

Design

The transmitter is designed as either IP67 NEMA 4X/6 enclosure for compact or wall mounting or 19" version as a 19" insert as a base to be used in:

- 19" rack systems
- Panel mounting IP20/NEMA 1 (prepared for IP65/NEMA 2 display side)
- Back of panel mounting IP20/NEMA 1
- Wall mounting IP66/NEMA 4X

Several options on 19" versions are available such as:

- Transmitters mounted in safe area for Ex ATEX approved flow sensors (incl. barriers)
- Transmitters with electrode cleaning unit on request

Function

The MAG 5000/6000 are transmitters with a build-in alphanumeric display in several languages. The transmitters evaluate the signals from the associated electromagnetic sensors and also fulfil the task of a power supply unit which provides the magnet coils with a constant current.

Further information on connection, mode of operation and installation can be found in the data sheets for the sensors.

Displays and controls

Operation of the transmitter can be carried out using:

- Control and display unit
- HART communicator
- PC/laptop and SIMATIC PDM software via HART communication
- PC/laptop and SIMATIC PDM software using PROFIBUS or Modbus communication

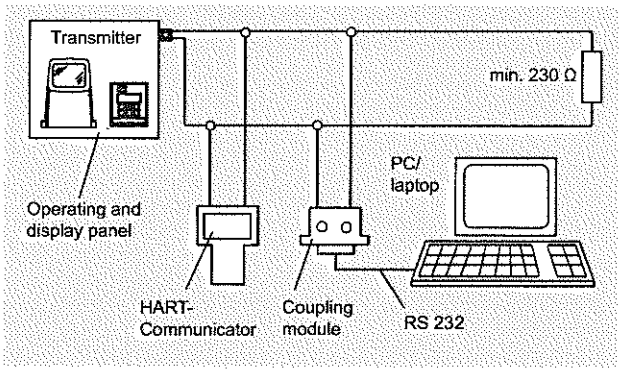

HART communication

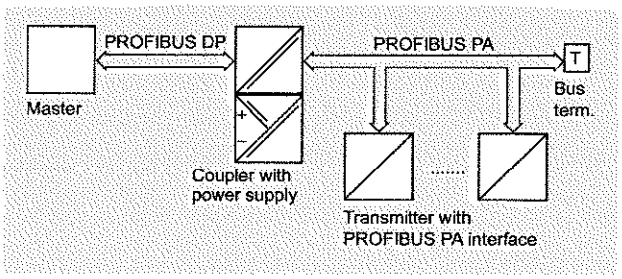

PROFIBUS PA communication

© Siemens AG 2013

Technical specifications

Mode of operation and design	
Measuring principle	Electromagnetic with pulsed constant field
Empty pipe	Detection of empty pipe (special cable required in remote mounted installation)
Excitation frequency	Depend on sensor size
Electrode input impedance	> 1 x 10^{14} Ω
Input	
Digital input	11 ... 30 V DC, R_i = 4.4 KΩ
• Activation time	50 ms
• Current	$I_{11\ V\ DC}$ = 2.5 mA, $I_{30\ V\ DC}$ = 7 mA
Output	
Current output	
• Signal range	0 ... 20 mA or 4 ... 20 mA
• Load	< 800 Ω
• Time constant	0.1 ... 30 s, adjustable
Digital output	
• Frequency	0 ... 10 kHz, 50 % duty cycle (uni/bidirectional)
• Pulse (active)	24 V DC, 30 mA, 1 KΩ ≤ R_i ≤ 10 KΩ, short-circuit-protected (power supplied from flowmeter)
• Pulse (passive)	3 ... 30 V DC, max. 110 mA, 200 Ω ≤ R_i ≤ 10 KΩ (powered from connected equipment)
• Time constant	0.1 ... 30 s, adjustable
Relay output	
• Time constant	Changeover relay, same as current output
• Load	42 V AC/2 A, 24 V DC/1 A
Low flow cut off	0 ... 9.9 % of maximum flow
Galvanic isolation	All inputs and outputs are galvanically isolated.
Max. measuring error (incl. sensor and zero point)	
• MAG 5000	0.4 % ±1 mm/s
• MAG 6000	0.2 % ±1 mm/s
Rated operation conditions	
Ambient temperature	
• Operation	• Display version: -20 ... +60 °C (-4 ... +140 °F) • Blind version: -20 ... +60 °C (-4 ... +140 °F) • MI-001 version -25 ... +55 °C (-13 ... +131 °F) • Custody Transfer (CT) version -20 ... +50 °C (-4 ... +122 °F)
• Storage	-40 ... +70 °C (-40 ... +158 °F)
Mechanical load (vibration)	
Compact version	18 ... 1000 Hz, 3.17 g rms, sinusoidal in all directions to IEC 68-2-36
19" insert	1 ... 800 Hz, 1 g, sinusoidal in all directions to IEC 68-2-36
Degree of protection	
Compact version	IP67/NEMA 4X/6 to IEC 529 and DIN 40050 (1 mH_2O 30 min.)
19" insert	IP20/NEMA 1 to IEC 529 and DIN 40050
EMC performance	IEC/EN 61326-1 (all environments) IEC/EN 61326-2-5

Display and keypad	
Totalizer	Two eight-digit counters for forward, net or reverse flow
Display	Background illumination with alphanumeric text, 3 x 20 characters to indicate flow rate, totalized values, settings and faults; Reverse flow indicated by negative sign
Time constant	Time constant as current output time constant
Design	
Enclosure material	
• Compact version	Fiber glass reinforced polyamide; stainless steel AISI 316/1.4436 (IP65)
• 19" insert	Standard 19" insert of aluminum/steel (DIN 41494), width: 21 TE, height: 3 HE
• Back of panel	IP20/NEMA 1; Aluminum
• Panel mounting	IP20/NEMA 1 (prepared for IP65/NEMA 2 display side); ABS plastic
• Wall mounting	IP66/NEMA 4X; ABS plastic
Dimensions	
Compact version	See dimensional drawings
19" insert	See dimensional drawings
Weight	
Compact version	0.75 kg (2 lb)
19" insert	See dimensional drawings
Power supply	• 115 ... 230 V AC +10 % -15 %, 50 ... 60 Hz • 11 ... 30 V DC or 11 ... 24 V AC
Power consumption	• 230 V AC: 17 VA • 24 V AC: 9 VA, I_N = 380 mA, I_{ST} = 8 A (30 ms) • 12 V DC: 11 W, I_N = 920 mA, I_{ST} = 4 A (250 ms) • 24 V DC: 8.4 VA, I_N = 350 mA, I_{ST} = 4 A (10 ms) I_{ST}= 4 A (250 ms): For solar panel please secure stable current supply
Certificates and approvals	CE, C-UL general purpose, C-tick; FM Class I, Div 2, CSA Class I, Div 2
Custody transfer approval (MAG 5000/6000 CT)	• Cold water: MI-001, PTB/OIML R 49 (pattern approval DE/DK) • Hot water: PTB and DANAK (MAG 6000 CT) • Chilled water: PTB K 7.2; OE12/C 040 • Other media than water (milk, beer etc.): PTB and DANAK OIML R 117 (pattern approval DE/DK) (MAG 6000 CT)
Communication	
Standard	
• MAG 5000	Without serial communication or HART as option
• MAG 6000	Prepared for client-mounted add-on modules
Optional (MAG 6000 only)	HART, Modbus RTU/RS 485, FOUNDATION Fieldbus H1, DeviceNet, PROFIBUS PA, PROFIBUS DP as add-on modules
• MAG 5000/6000 CT	No communication moduls approved

© Siemens AG 2013

Safety barrier (e/ia)

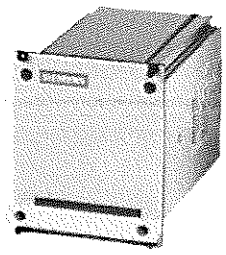

Application	**For use with MAG 5000/6000 19" and MAG 1100 Ex ATEX/MAG 3100 Ex ATEX**		
Ex approval	MAG 1100 Ex [EEx e ia] IIB ATEX		
	MAG 3100 Ex [EEx e ia] IIC ATEX		
Cable parameter	Group	Capacity in µF	Inductance in mH
Electrode	IIC	≤ 4.1	≤ 80
	IIB	≤ 45	≤ 87
	IIA	≤ 45	≤ 87
Ambient temperature			
• During operation	-20 ... +50 °C (-4 ... +122 °F)		
• During storage	-20 ... +70 °C (-4 ... +158 °F)		
Enclosure			
• Material	Standard 19" insert in aluminum/steel (DIN 41494)		
• Width	21 TE (4.75")		
• Height	3 HE (5.25")		
• Rating	IP20 / NEMA 1 to EN 60529		
• Mechanical load	1 g, 1 ... 800 Hz sinusoidal in all directions to EN 60068-2-36		

© Siemens AG 2013

Selection and Ordering data

Transmitter MAG 5000

Description	Article No.
Transmitter MAG 5000 Blind for compact and wall mounting; IP67/NEMA 4X/6, fibre glass reinforced polyamide	
• 11 ... 30 V DC/ 11 ... 24 V AC	✱ **7ME6910-1AA30-0AA0**
• 115 ... 230 V AC, 50/60 Hz	✱ **7ME6910-1AA10-0AA0**
Transmitter MAG 5000 Display for compact and wall mounting; IP67/NEMA 4X/6, fibre glass reinforced polyamide	
• 11 ... 30 V DC/ 11 ... 24 V AC	✱ **7ME6910-1AA30-1AA0**
• 115 ... 230 V AC, 50/60 Hz	✱ **7ME6910-1AA10-1AA0**
• 115 ... 230 V AC, 50/60 Hz, with HART	✱ **7ME6910-1AA10-1BA0**
Transmitter MAG 5000 CT for compact and wall mounting, approved for custody transfer (only with approval marks, no verification – only a complete flowmeter can be verified, i.e. sensor together with the transmitter); IP67/NEMA 4X/6, fibre glass reinforced polyamide	
• 11 ... 30 V DC/ 11 ... 24 V AC	**7ME6910-1AA30-1AB0**
• 115 ... 230 V AC, 50/60 Hz	**7ME6910-1AA10-1AB0**
Transmitter MAG 5000 for 19" rack and wall mounting	
• 11 ... 30 V DC/ 11 ... 24 V AC	✱ **7ME6910-2CA30-1AA0**
• 115 ... 230 V AC, 50/60 Hz	✱ **7ME6910-2CA10-1AA0**

✱ We can offer shorter delivery times for configurations designated with the Quick Ship Symbol ✱. For details see page 9/5 in the appendix.

Transmitter MAG 6000

Description	Article No.
Transmitter MAG 6000 Blind for compact and wall mounting; IP67/NEMA 4X/6, fibre glass reinforced polyamide	
• 11 ... 30 V DC/ 11 ... 24 V AC	✱ **7ME6920-1AA30-0AA0**
• 115 ... 230 V AC, 50/60 Hz	✱ **7ME6920-1AA10-0AA0**
Transmitter MAG 6000 for compact and wall mounting; IP67/NEMA 4X/6, fibre glass reinforced polyamide	
• 11 ... 30 V DC/ 11 ... 24 V AC	✱ **7ME6920-1AA30-1AA0**
• 115 ... 230 V AC, 50/60 Hz	✱ **7ME6920-1AA10-1AA0**
Transmitter MAG 6000 for compact and wall mounting; IP65/NEMA 4, stainless steel AISI 316/1.4436 (only for sensor with SS terminal box) (for remote installation order SS terminal box separately)	
• 11 ... 30 V DC/ 11 ... 24 V AC	**7ME6920-1QA30-1AA0**
• 115 ... 230 V AC, 50/60 Hz	**7ME6920-1QA10-1AA0**
Transmitter MAG 6000 CT for compact and wall mounting, approved for custody transfer (no communication modules possible; only with approval marks, no verification – only a complete flowmeter can be verified, i.e. sensor together with the transmitter); IP67/NEMA 4X/6, fibre glass reinforced polyamide	
• 11 ... 30 V DC/ 11 ... 24 V AC	**7ME6920-1AA30-1AB0**
• 115 ... 230 V AC, 50/60 Hz	**7ME6920-1AA10-1AB0**
Transmitter MAG 6000 SV for compact and wall mounting; special excitation 44 Hz settings for Batch application DN ≤ 25/1" IP67/NEMA 4X/6, fibre glass reinforced polyamide	
11 ... 30 V DC/ 11 ... 24 V AC	**7ME6920-1AB30-1AA0**
115 ... 230 V AC, 50/60 Hz	**7ME6920-1AB10-1AA0**
Transmitter MAG 6000 for 19" rack and wall mounting	
• 11 ... 30 V DC/ 11 ... 24 V AC	✱ **7ME6920-2CA30-1AA0**
• 115 ... 230 V AC, 50/60 Hz	✱ **7ME6920-2CA10-1AA0**

© Siemens AG 2013

Description	Article No.
Transmitter MAG 6000 SV for 19" rack and wall mounting; special excitation 44 Hz settings for Batch application DN ≤ 25/1"	
• 11 ... 30 V DC/ 11 ... 24 V AC	7ME6920-2CB30-1AA0
• 115 ... 230 V AC, 50/60 Hz	7ME6920-2CB10-1AA0
MAG 6000 with IP66/NEMA 4X enclosure; 115 ... 230 V AC, 50/60 Hz; cable gland PG13.5	7ME6920-2EA10-1AA0
MAG 6000 with safety barrier for Ex-approved sensors, complete mounted with IP66/NEMA 4X wall mounting enclosure, ATEX, 115 ... 230 V AC, 50/60 Hz; cable gland PG13.5	
• For ATEX 2G D sensors	7ME6920-2MA11-1AA0
MAG 6000 SV, 19" insert, in IP66/NEMA 4X , ABS plastic enclosure, excitation frequency 44 Hz for Batch application DN ≤ 25/1"; cable gland PG13.5	
• 11 ... 30 V DC, 11 ... 24 V AC, 50/60 Hz	7ME6920-2EB30-1AA0
• 115 ... 230 V AC, 50/60 Hz	7ME6920-2EB10-1AA0

We can offer shorter delivery times for configurations designated with the Quick Ship Symbol ✹. For details see page 9/5 in the appendix.

Operating instructions for SITRANS F M MAG 5000/6000

Description	Article No.
For SITRANS F M MAG 5000/6000 IP67	
• English	A5E02338368
• German	A5E02944982
• Spanish	A5E02944995
• French	A5E02944990
For SITRANS F M MAG 5000/6000 19"	
• English	A5E02082880

This device is shipped with a Quick Start guide and a CD containing further SITRANS F literature.

All literature is also available for free at:
http://www.siemens.com/flowdocumentation

Communication modules for MAG 6000

Description	Article No.
HART (not for MAG 6000 I)	✹ FDK:085U0226
Modbus RTU/RS 485	✹ FDK:085U0234
PROFIBUS PA Profile 3	✹ FDK:085U0236
PROFIBUS DP Profile 3	✹ FDK:085U0237
DeviceNet	✹ FDK:085U0229
FOUNDATION Fieldbus H1	A5E02054250

Operating instructions for SITRANS F add-on modules

Description	Article No.
HART	
• English	A5E03089708
PROFIBUS PA/DP	
• English	A5E00726137
• German	A5E01026429
MODBUS	
• English	A5E00753974
• German	A5E03089262
• Spanish	A5E03089278
• French	A5E03089265
FOUNDATION Fieldbus	
• English	A5E02318728
• German	A5E02488856
• Spanish	A5E02512177
• French	A5E02512169
DeviceNet	
• English	A5E03089720

This device is shipped with a Quick Start guide and a CD containing further SITRANS F literature.

Accessories for MAG 5000 and MAG 6000

Description	Article No.
Wall mounting unit for IP67/ NEMA 4X/6 version, wall bracket, terminal box in polyamide	
• 4 x M20 cable glands	✹ FDK:085U1018
• 4 x ½" NPT cable glands	✹ FDK:085U1053
Sun lid for MAG 5000/6000 transmitter (Frame and lid)	A5E02328485
Cable for standard electrode or coil, 3 x 1.5 mm² / 18 gage with shield PVC; Temperature range: -30 ... +70 °C (-22 ... +158 °F)	
• 10 m (33 ft)	✹ FDK:083F0121
• 20 m (65 ft)	✹ FDK:083F0210
• 40 m (130 ft)	✹ FDK:083F0211
• 60 m (200 ft)	✹ FDK:083F0212
• 100 m (330 ft)	FDK:083F0213
• 150 m (500 ft)	FDK:083F3052
• 200 m (650 ft)	FDK:083F3053
• 500 m (1650 ft)	FDK:083F3054

We can offer shorter delivery times for configurations designated with the Quick Ship Symbol ✹. For details see page 9/5 in the appendix.

© Siemens AG 2013

Description	Article No.
Electrode cable for empty pipe or low conductivity[1], double shielded, 3 x 0.25 mm². Temperature range : -30 ... +70 °C (-22 ... +158 °F)	
• 10 m (33 ft)	✹ **FDK:083F3020**
• 20 m (65 ft)	✹ **FDK:083F3095**
• 40 m (130 ft)	**FDK:083F3094**
• 60 m (200 ft)	**FDK:083F3093**
• 100 m (330 ft)	**FDK:083F3092**
• 150 m (500 ft)	**FDK:083F3056**
• 200 m (650 ft)	**FDK:083F3057**
• 500 m (1650 ft)	**FDK:083F3058**
Low-noise electrode coax cable for low conductivity and high vibration levels of cables, 3 x 0.13 mm²	
• 2 m (6.6 ft)	**A5E02272692**
• 5 m (16.5 ft)	**A5E02272723**
• 10 m (33 ft)	**A5E02272730**
Cable kit with standard coil cable[1], 3 x 1.5 mm²/18 gage with shield PVC and electrode cable double shielded, 3 x 0.25 mm² Temperature range: -30 ... +70 °C (-22 ... +158 °F)	
• 5 m (16.5 ft)	✹ **A5E02296329**
• 10 m (33 ft)	✹ **A5E01181647**
• 15 m (49 ft)	✹ **A5E02296464**
• 20 m (65 ft)	✹ **A5E01181656**
• 25 m (82 ft)	✹ **A5E02296490**
• 30 m (98 ft)	✹ **A5E02296494**
• 40 m (130 ft)	✹ **A5E01181686**
• 50 m (164 ft)	✹ **A5E02296498**
• 60 m (200 ft)	**A5E01181689**
• 100 m (330 ft)	**A5E01181691**
• 150 m (500 ft)	**A5E01181699**
• 200 m (650 ft)	**A5E01181703**
• 500 m (1650 ft)	**A5E01181705**
Potting kit for terminal box of flow sensors for IP68/NEMA 6P (not for Ex sensors)	✹ **FDK:085U0220**
19" safety barrier (21 TE) [EEx e ia] IIC for MAG 1100 Ex sensors and MAG 3100 Ex sensors, incl. back plate	**FDK:083F5034**
Panel mounting enclosure for 19" insert (21 TE); IP65/NEMA 2 enclosure in ABS plastic for front panel mounting	**FDK:083F5030**
Panel mounting enclosure for 19" insert (42 TE); IP65/NEMA 2 enclosure in ABS plastic for front panel mounting	**FDK:083F5031**

Description	Article No.
Back of panel mounting enclosure for 19" insert (21 TE); IP20/NEMA 1 enclosure in aluminum	**FDK:083F5032**
Back of panel mounting enclosure for 19" insert (42 TE); IP20/NEMA 1 enclosure in aluminum	**FDK:083F5033**
IP66/NEMA 4X, wall mounting enclosure for 19" inserts (without back plates). Use with PCB A5E02559813 or A5E02559814	
• 21 TE	**FDK:083F5037**
• 42 TE	**FDK:083F5038**
Front cover (7TE) for panel mounting enclosure	**FDK:083F4525**
Sun shield for remote MAG 5000/6000 transmitters	**A5E01209496**
Sun Shield for compact MAG 5000/6000 transmitters on MAG 3100 (DN 15 ... 2000 (½" ... 78") or MAG 5100 W (DN 150 ... 1200 (6" ... 48")	**A5E01209500**

✹ We can offer shorter delivery times for configurations designated with the Quick Ship Symbol ✹. For details see page 9/5 in the appendix.

[1] Not for MAG 6000 with safety barrier

© Siemens AG 2013

Spare parts

Description	Article No.
Connection board (for polyamide terminalbox)	
• 12 ... 24 V	**A5E02559817**
• 115 ... 230 V	**A5E02559816**
Connection board (for stainless steel terminal-box)	
• 12 ... 24 V	**A5E02604280**
• 115 ... 230 V	**A5E02604272**
19" enclosure, 12 ... 24 V, 115 ... 230 V	
• Connection board for standard 19" transmitter	**A5E02559809**
• Connection board for transmitter ia and safety barrier	**A5E02559810**
• Connection board for transmitter ia/ib and safety barrier (only for sensors produced before October 2007)	**A5E02559811**
• Connection board for transmitter and cleaning unit	**FDK:083F4123**
SENSORPROM memory unit (Sensor code and serial numbers must be specified on order)	
• 2 kB (for MAG 5000/6000/ MAG 6000 I)	
- 1 pc.	**FDK:085U1005**
- 10 pcs.	**FDK:083F5052**
• 250 B (for MAG 2500/3000)	**FDK:085U1008**
Display unit for MAG 5000/6000	
• Black neutral front	**FDK:085U1038**
• Siemens front	**FDK:085U1039**
Display unit for 19" versions	**FDK:085U3349**

Description	Article No.
Cable glands, for above cable, 4 pcs.	
• M20	⊛ **A5E00822490**
• ½" NPT	⊛ **A5E00822501**
• PG 13.5, 2 pcs.	**FDK:083G0228**
Sealing screws for sensor/ transmitter, 2 pcs	**FDK:085U0221**
Terminal box, in polyamide, inclusive lid	
• M20	**FDK:085U1050**
• ½" NPT	**FDK:085U1052**
Terminal box lid, in polyamide	**FDK:085U1003**
Terminal box, in stainless steel, inclusive lid for MAG 6000 in stainless steel and for all Ex sensors	
• M20	**A5E00836867**
• ½" NPT	**A5E00836868**
Terminal box (3A) for MAG 1100 F in polyamide, inclusive lid	
• M20	**A5E00822478**
• ½" NPT	**A5E00822479**
Wall unit enclosure IP66, 12 ... 24 V, 115 ... 230 V	
• PCB for standard transmitter	**A5E02559813**
• PCB for transmitter ia/e and safety barrier	**A5E02559814**
• PCB for transmitter ia/ib and safety barrier (7ME6130, 7ME6150 and 7ME6330)	**A5E02559812**
• PCB for transmitter and cleaning unit	**A5E02559815**

½" NPT M20

⊛ We can offer shorter delivery times for configurations designated with the Quick Ship Symbol ⊛. For details see page 9/5 in the appendix.

© Siemens AG 2013

Dimensional drawings

Transmitter IP67/NEMA 4X/6 compact polyamide

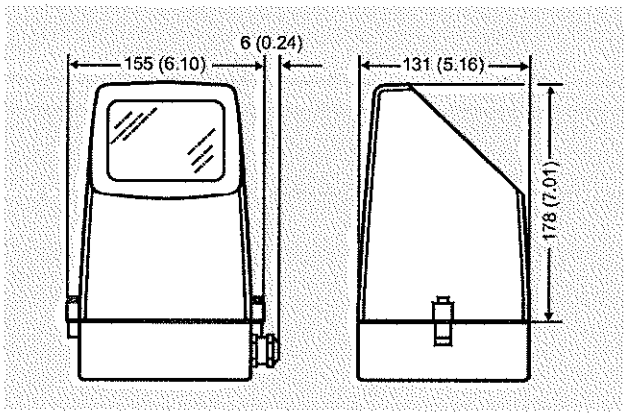

Transmitter compact mounted, dimensions in mm (inch)

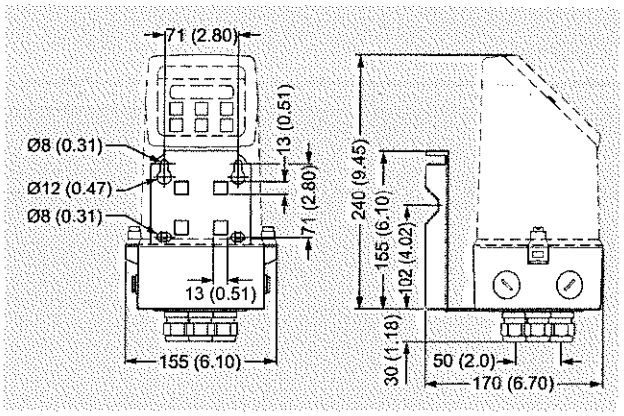

Transmitter wall mounted, dimensions in mm (inch)

Transmitter, 19" IP20/NEMA 1 standard unit

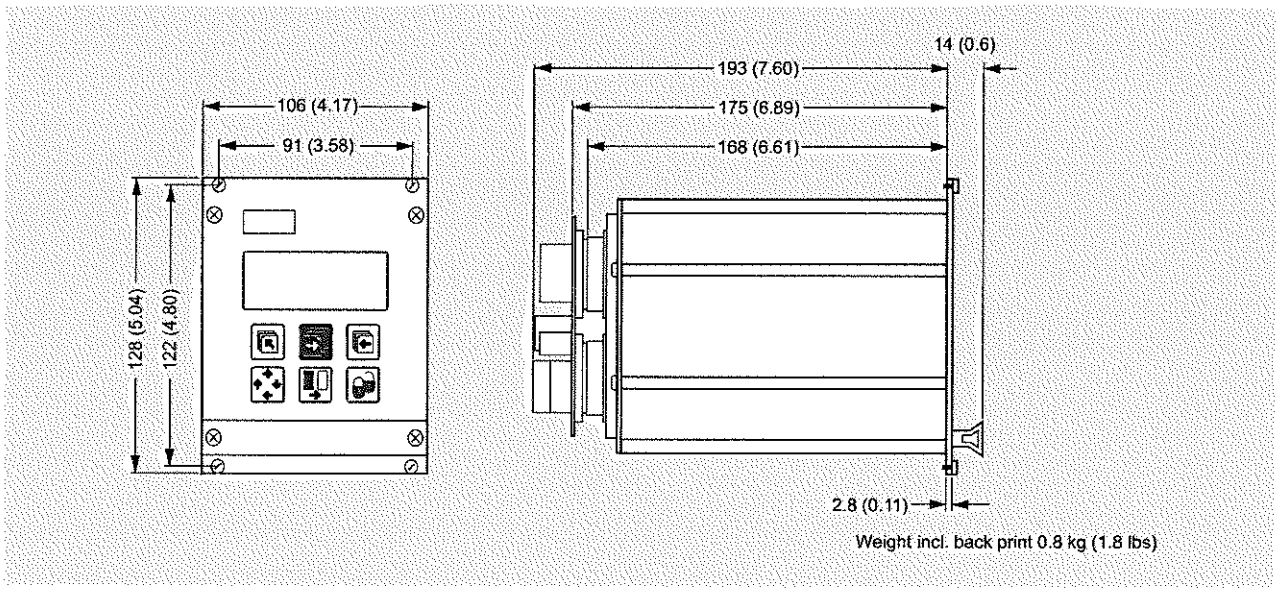

Dimensions in mm (inch)

© Siemens AG 2013

Transmitter, wall mounting IP66/NEMA 4X, 21 TE

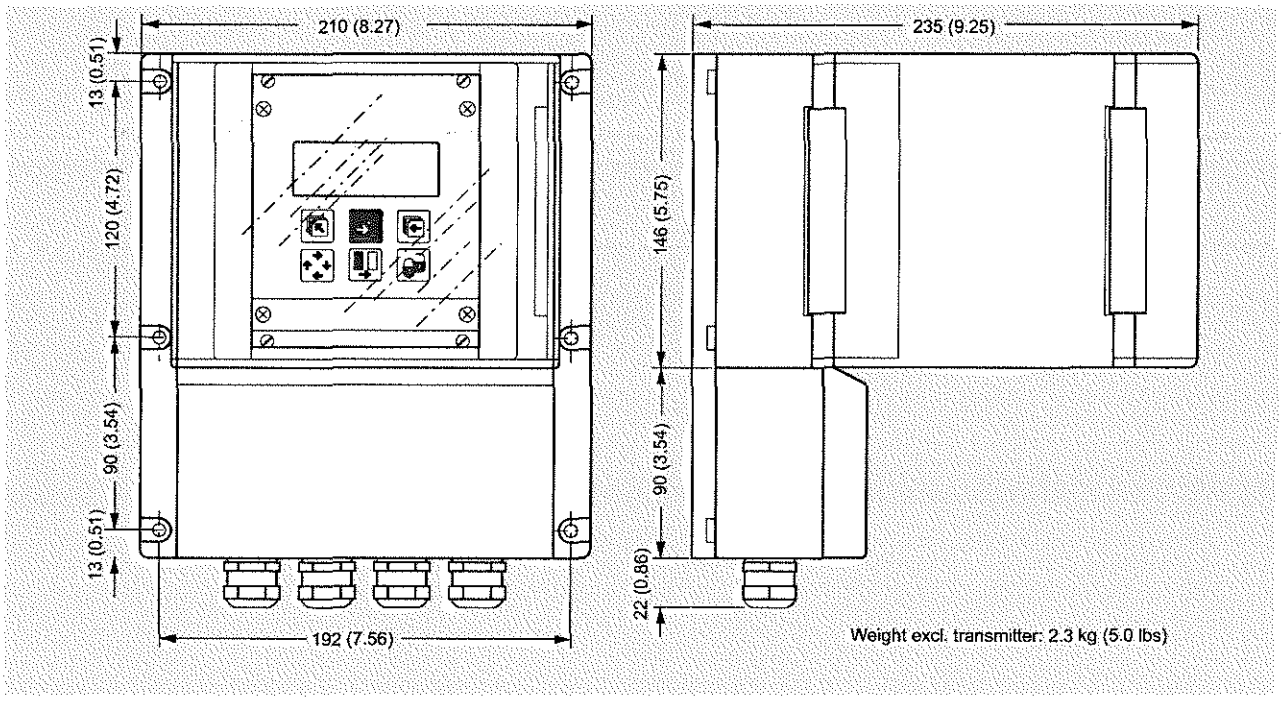

Dimensions in mm (inch)

Transmitter, wall mounting IP66/NEMA 4X, 42 TE

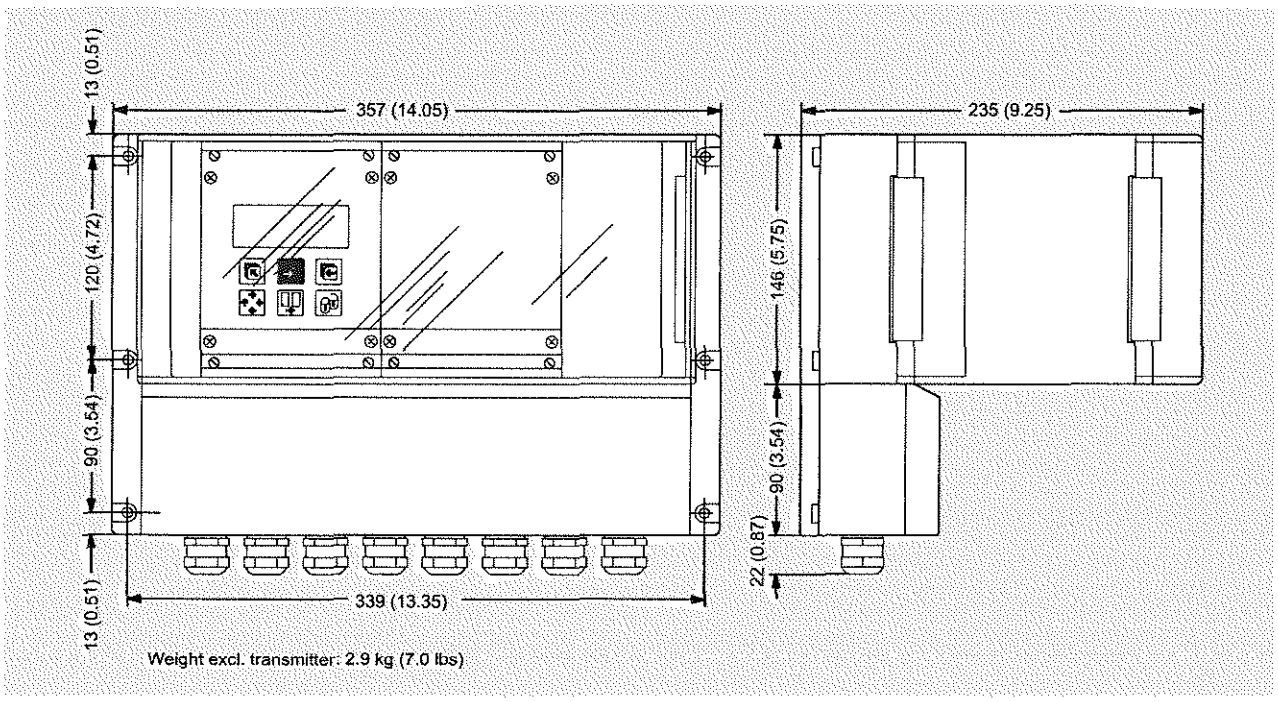

Dimensions in mm (inch)

© Siemens AG 2013

Transmitter, panel front IP20/NEMA 1, 21 TE

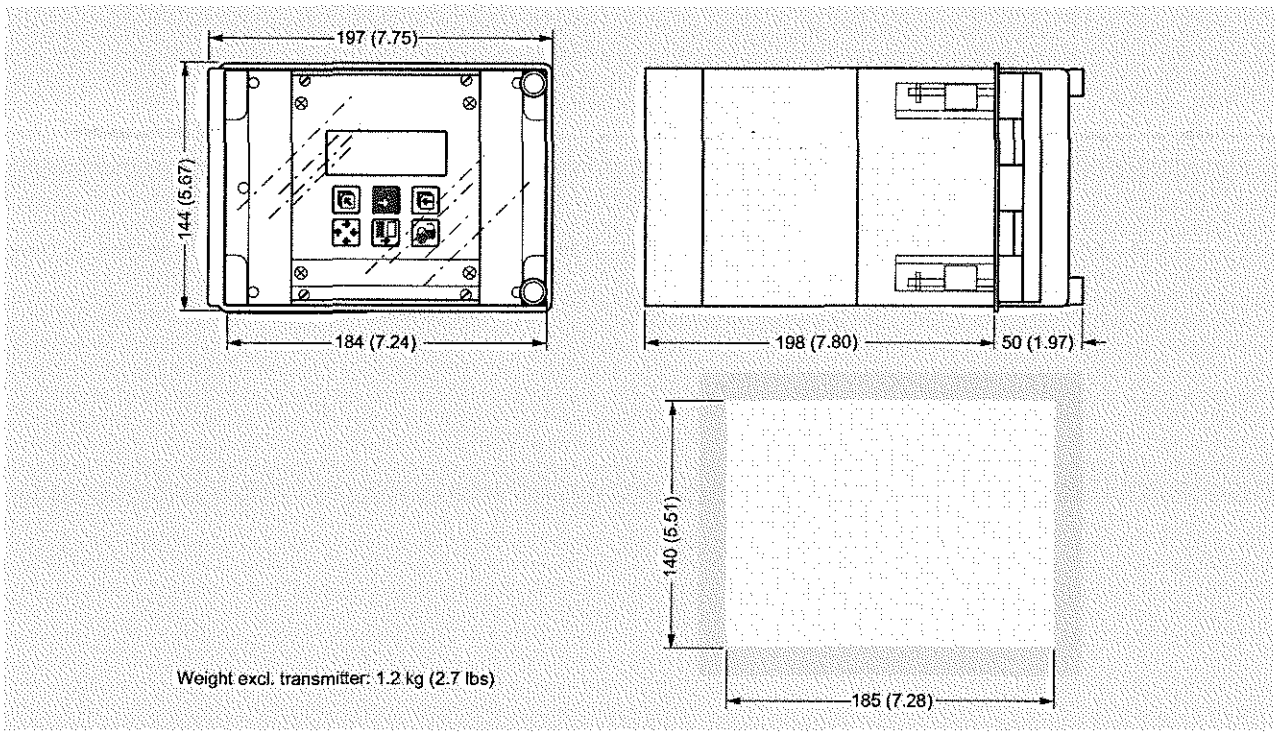

Dimensions in mm (inch)

Transmitter, panel front IP20/NEMA 1, 42 TE

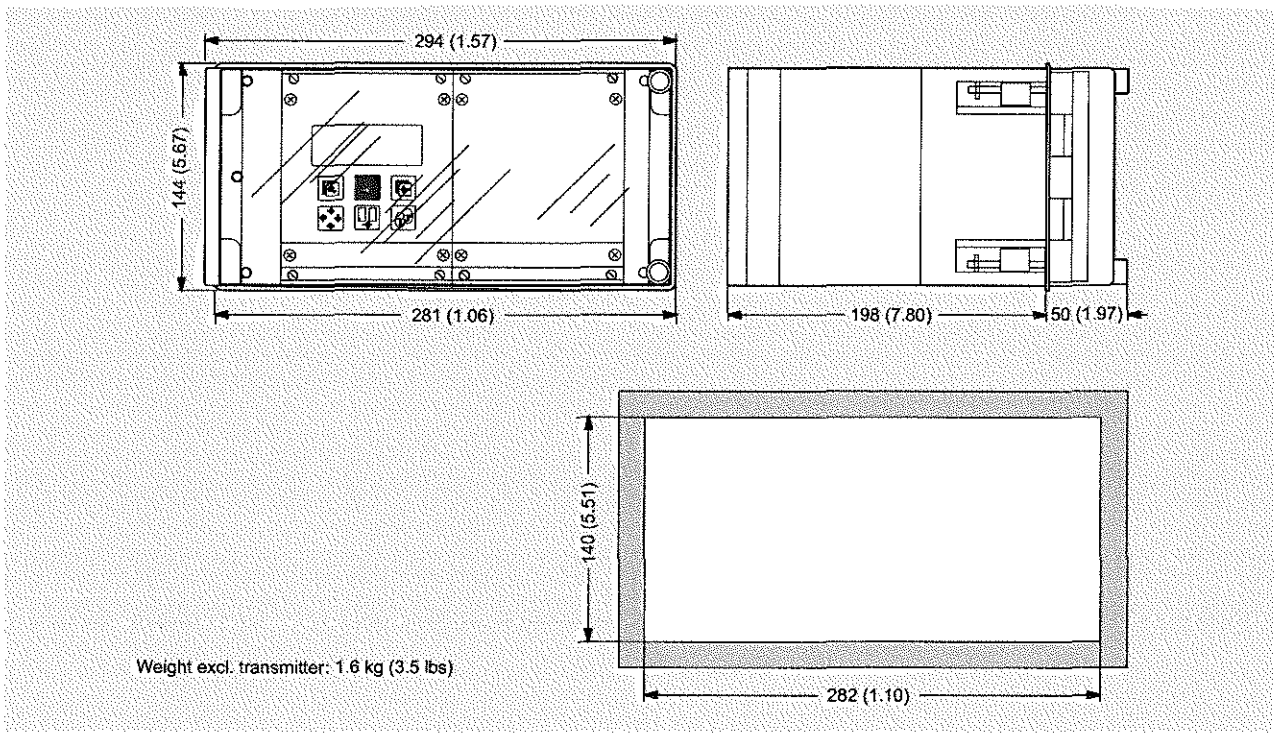

Dimensions in mm (inch)

© Siemens AG 2013

Transmitter, back of panel IP20/NEMA 1, 21 TE

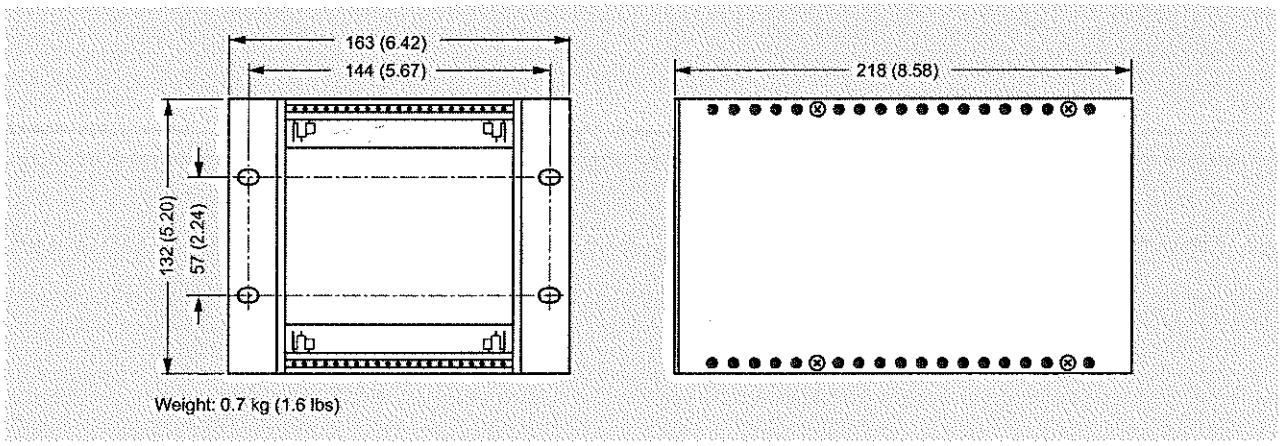

Dimensions in mm (inch)

Transmitter, back of panel IP20/NEMA 1, 42 TE

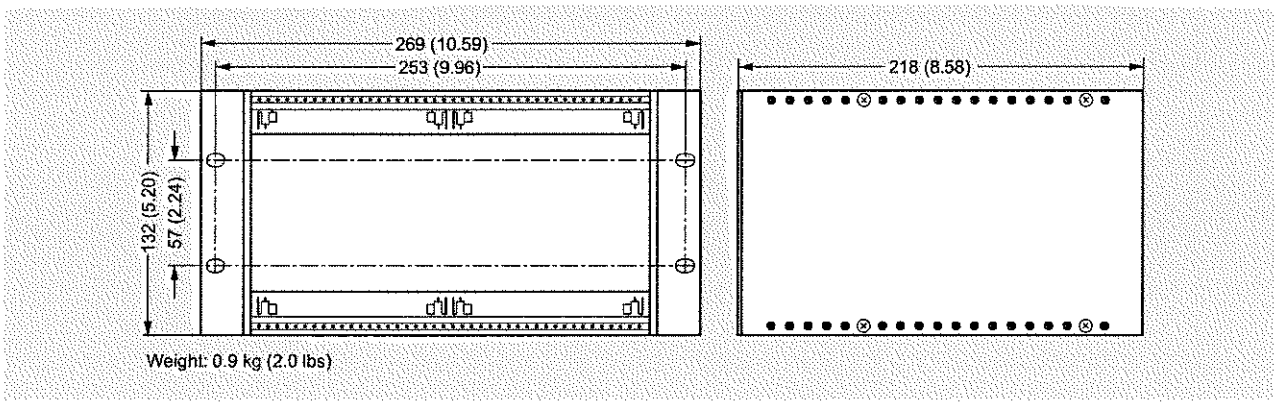

Dimensions in mm (inch)

© Siemens AG 2013

Schematics

Electrical connection

Grounding

PE must be connected due to safety class 1 power supply.

Mechanical counters

When mounting a mechanical counter to terminals 57 and 58 (active output), a 1000 µF capacitor must be connected to the terminals 56 and 58. Capacitor + is connected to terminal 56 and capacitor - to terminal 58.

Output cables

If the output cable length is long in noisy environment, we recommend to use shielded cable.

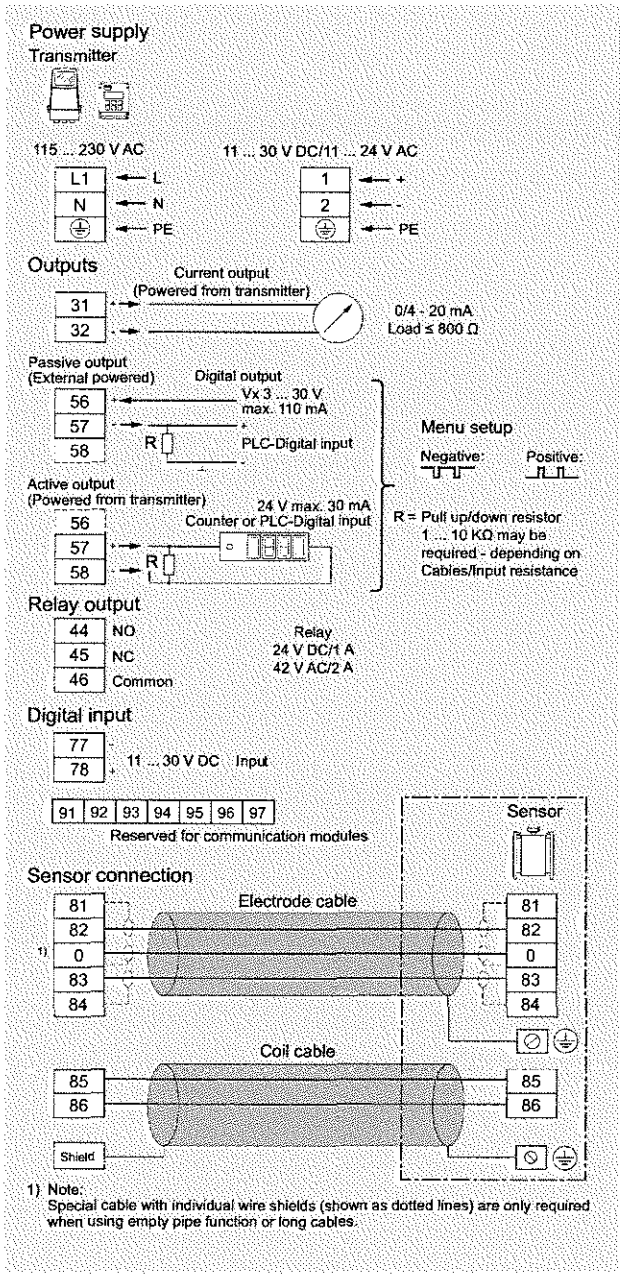

© Siemens AG 2013

Overview

The SITRANS F M MAG 3100 is an electromagnetic flow sensor in a large variety that meets the demands of almost every flow application.

Benefits

- Wide range of sizes: DN 15 to DN 2000 (½" to 78")
- The flexible design is for all applications not covered by the standard industry-specific sensors: MAG 1100, MAG 1100 F, MAG 3100 P and MAG 5100 W
- Wide pressure range: PN 6 to PN 100
  ANSI Class 150/300, AS 2129, AS 4087, JIS K10 and K20. On request up to 690 bar (10 000 psi)
- Wide range of electrode and liner material to fit even the most extreme process media
- Fully welded construction provides a ruggedness that suits the toughest applications and environments
- Easy commissioning, the SENSORPROM unit automatically updates settings.
- Designed to allow patented SITRANS F M in-situ verification using the SENSORPROM fingerprints.

Application

The main applications of the SITRANS F M electromagnetic flow sensors can be found in the following fields:

- Process industry
- Chemical industry
- Steel industry
- Mining
- Utility
- Power generation and distribution
- Oil and gas / HPI
- Water and waste water

Design

- Compact or remote mounting possible
- Easy "plug & play" field changeability of transmitter
- Ex ATEX and FM/CSA versions
- High temperature sensor for applications with temperatures up to 180 °C (356 °F)
- Approvals for PTB and OIML R 117
- Meets EEC directives: PED, 97/23/EC pressure directive for EN1092-1 flanges
- Build-in length according to ISO 13359, the standard includes sizes up to DN 400
- Onsite or factory upgrade to IP68/NEMA 6P of a standard sensor.

Mode of operation

The flow measuring principle is based on Faraday's law of electromagnetic induction according to which the sensor converts the flow into an electrical voltage proportional to the velocity of the flow.

Integration

The complete flowmeter consists of a flow sensor and an associated transmitter MAG 5000, 6000 and 6000 I.

The flexible communication concept USM II simplifies integration and update to a variety of fieldbus systems such as HART, FOUNDATION Fieldbus H1, DeviceNet, PROFIBUS DP and PA, Modbus RTU/RS 485.

© Siemens AG 2013

Pressure/temperature curve; material AISI 316L/1.4404 AS 2129, Class E

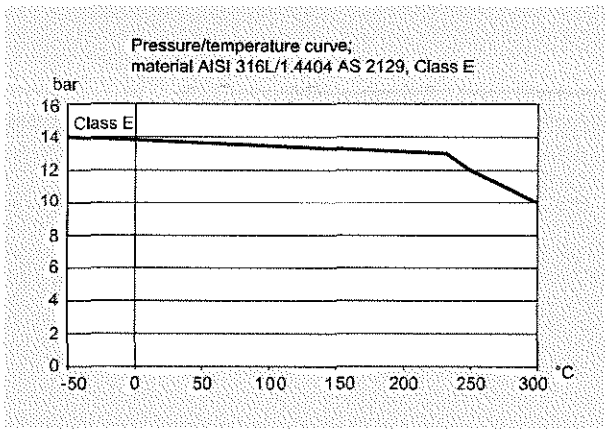

Pressure/temperature curve - JIS 2200

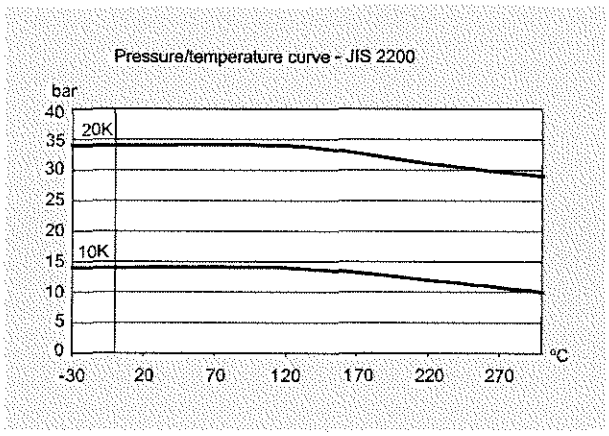

Pressure/temperature curve to EN (DIN) flanges, material A 105 carbon steel

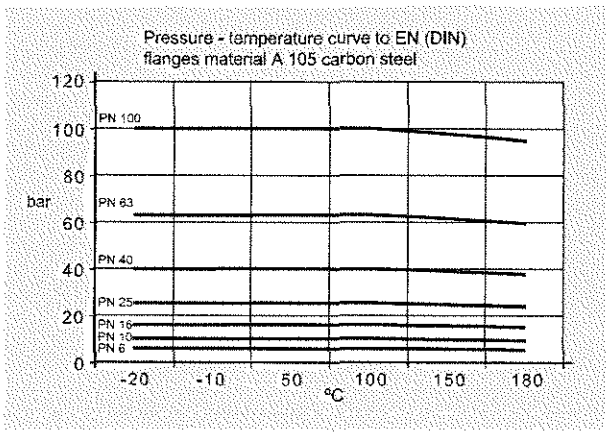

Pressure/temperature curve to EN (DIN) flanges AISI 304

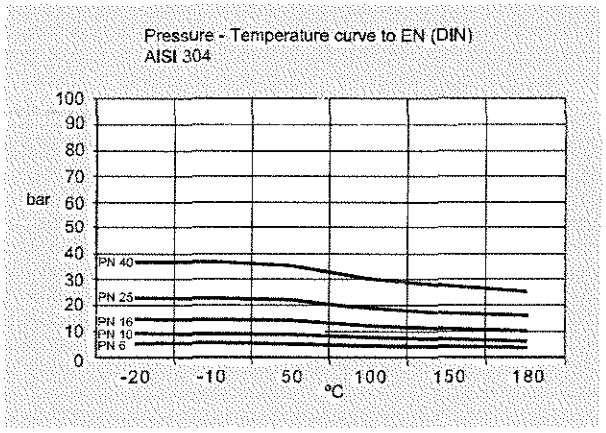

Pressure/temperature curve to EN (DIN) flanges AISI 316

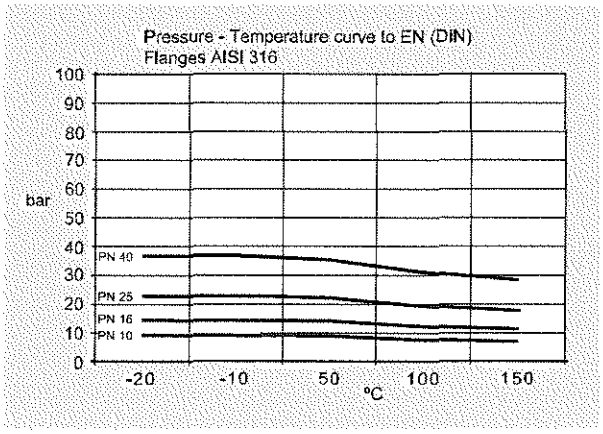

Pressure/temperature curve to ANSI B16.5 flanges

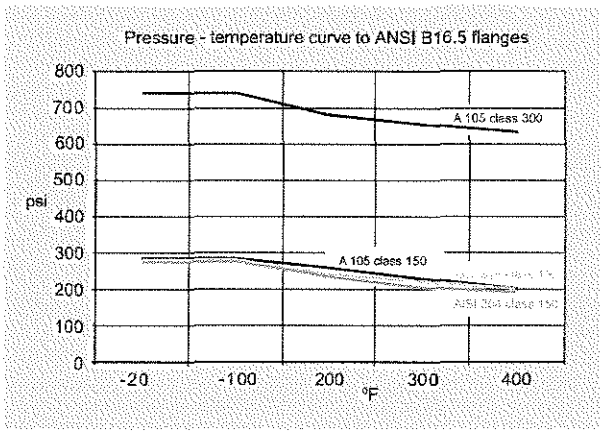

Note: The pressure-temperature curves only assist in the selection of a system. No responsibility is taken for the correctness of the information. For further information on the PED standard and requirements, see page 9/6.

© Siemens AG 2013

Technical specifications

Version	MAG 3100	MAG 3100 HT (High Temperature)
Product characteristic	Flexible product program	Flexible product program
Nominal size	DN 15 ... DN 2000 (½" ... 78")	DN 15 ... DN 300 (½" ... 12")
Measuring principle	Electromagnetic induction	Electromagnetic induction
Excitation frequency (Mains supply: 50 Hz/60 Hz)	• DN 15 ... 65 (½" ... 2½"): 12.5 Hz/15 Hz • DN 80 ... 150 (3" ... 6"): 6.25 Hz/7.5 Hz • DN 200 ... 1200 (8" ... 48"): 3.125 Hz/3.75 Hz • DN 1400 ... 2000 (54" ... 78"): 1.5625 Hz/1.875 Hz	• DN 15 ... 65 (½" ... 2½"): 12.5 Hz/15 Hz • DN 80 ... 150 (3" ... 6"): 6.25 Hz/7.5 Hz • DN 200 ... 300 (8" ... 12"): 3.125 Hz/3.75 Hz
Process connection		
Flanges	EN 1092-1, raised face[1)] (EN 1092-1, DIN 2501 and BS 4504 have the same mating dimensions) • DN 65 ... 2000 (2½" ... 78"): PN 6 (87 psi) • DN 200 ... 2000 (8" ... 78"): PN 10 (145 psi) • DN 65 ... 2000 (2½" ... 78"): PN 16 (232 psi) • DN 200 ... 600 (8" ... 24"): PN 25 (362 psi) • DN 15 ... 600 (½" ... 24"): PN 40 (580 psi) • DN 50 ... 300 (2" ... 12"): PN 63 (913 psi) • DN 25 ... 300 (1" ... 12"): PN 100 (1450 psi) ANSI B16.5 (~BS 1560), raised face • ½" ... 24": Class 150 (20 bar (290 psi)) • ½" ... 24": Class 300 (50 bar (725 psi)) AWWA C-207, flat face 28" ... 78": Class D (10 bar) AS 2129, raised face ½" ... 48": Table E AS 4087, raised face: • PN 16 (DN 50 ... 1200, 16 bar (232 psi)) • PN 21 (DN 50 ... 600, 21 bar (304 psi)) • PN 35 (DN 50 ... 600, 35 bar (508 psi)) JIS B 2220:2004 • K10 (1" ... 24") • K20 (1" ... 24") Other flanges and pressure ratings on request	EN 1092-1, raised face (EN 1092-1, DIN 2501 and BS 4504 have the same mating dimensions) • DN 15 ... 300 (½" ... 12"): PN 40 (580 psi) • DN 65 ... 300 (2½" ... 12"): PN 16 (232 psi) • DN 200 ... 300 (8" ... 12"): PN 10 (145 psi) • DN 200 ... 300 (8" ... 12"): PN 25 (362 psi) ANSI B16.5 (~BS 1560), raised face: • ½" ... 12": Class 150 (20 bar (290 psi)) • ½" ... 12": Class 300 (50 bar (725 psi)) AS 2129, raised face ½" ... 12": Table E Other flanges and pressure ratings on request
Rated operation conditions		
Ambient temperature (conditions also dependent on liner characteristiques)		
• Standard sensor	-40 ... +100 °C (-40 ... +212 °F)	-40 ... +100 °C (-40 ... +212 °F)
• Ex sensor	-20 ... +60 °C (-4 ... +140 °F)	For medium temperature up to 150 °C (302 °F): -20 ... +60 °C (-4 ... +140 °F) For medium temperature 150 ... 180 °C (302 ... 356 °F): -20 ... +50 °C (-4 ... +122 °F)
• With compact transmitter		
- MAG 5000/6000[2)]	-20 ... +60 °C (-4 ... +140 °F)	-20 ... +60 °C (-4 ... +140 °F)
- MAG 6000 I	-20 ... +60 °C (-4 ... +140 °F)	-20 ... +60 °C (-4 ... +140 °F)
- MAG 6000 I Ex	-20 ... +60 °C (-4 ... +140 °F)	-20 ... +60 °C (-4 ... +140 °F)

© Siemens AG 2013

Flow sensor MAG 3100 and MAG 3100 HT

Version	MAG 3100	MAG 3100 HT (High Temperature)
Operating pressure [abs. bar] (maximum operating pressure decreases with increasing operating temperature and with stainless steel flanges)	• Soft rubber 0.01 ... 100 bar (0.15 ... 1450 psi) • EPDM 0.01 ... 40 bar (0.15 ... 580 psi) • Linatex 0.01 ... 40 bar (0.15 ... 580 psi) • Ebonite 0.01 ... 100 bar (0.15 ... 1450 psi) • PTFE - DN ≤ 300 (≤ 12"): 0.3 ... 50 bar (4 ... 725 psi) - 350 ≤ DN ≤ 600 (14" ≤ DN ≤ 24"): 0.3 ... 40 bar (4 ... 580 psi) • PFA - DN 15 ... 150 (½" ... 6"): Vacuum 0.02 ... 50 bar (0.29 ... 725 psi)	• PTFE Teflon - DN 15 ... 300 (½" ... 12") (130/180 °C (266 °F/356°F)): 0.3/0.6 ... 50 bar (4/8 ... 725 psi) (180 °C (356 °F) PTFE has factory mounted grounding SS rings type E and SS terminal box) • PFA - DN 15 ... 150 (½" ... 6"): Vacuum 0.02 ... 50 bar (0.29 ... 725 psi)
Enclosure rating	IP67 to EN 60529/NEMA 4X/6, 1 mH_2O for 30 min Option: IP68 to EN 60529/NEMA 6P, 10 mH_2O cont. (not for Ex)	IP67 to EN 60529/NEMA 4X/6, 1 mH_2O for 30 min Option: IP68 to EN 60529/NEMA 6P, 10 mH_2O cont. (not for Ex)
Pressure drop at 3 m/s	As straigth pipe	
Test pressure	1.5 x PN (where applicable)	
Mechanical load (vibration)	• 18 ... 1000 Hz random in x, y, z, directions for 2 hours according to EN 60068-2-36 • Sensor: 3.17 grms • Sensor with compact MAG 5000/ 6000 mounted transmitter: 3.17 grms • Sensor with compact MAG 6000 I/ 6000 I Ex mounted transmitter: 1.14 grms	• 18 ... 1000 Hz random in x, y, z, directions for 2 hours according to EN 60068-2-36 • Sensor: 3.17 grms • Sensor with compact MAG 5000/ 6000 mounted transmitter: 3.17 grms • Sensor with compact MAG 6000 I/ 6000 I Ex mounted transmitter: 1.14 grms
Temperature of medium	• Soft rubber 0 ... +70 °C (32 ... 158 °F) • EPDM -10 ... +70 °C (14 ... 158 °F) • Linatex (rubber) -40 ... +70 °C (-40 ... +158 °F) (for temperatures below -20 °C (-4 °F) AISI 304 or 316 flanges must be used) • Ebonite 0 ... 95 °C (32 ... 203 °F) • PTFE -20 ... +100 °C (-4 ... +212 °F) • PFA -20 ... +100 °C (-4 ... +212°F)	• PTFE -20 ... +130 °C (-4 ... +266 °F) • PTFE -20 ... +180 °C (-4 ... +356 °F) Factory mounted grounding rings type E in SS and SS terminal box. Can only be used with remote transmitter. • PFA -20 ... +150 °C (-4 ... +300 °F)
EMC	2004/108/EC	2004/108/EC
Design		
Weight	See dimensional drawings	
Flange and housing material	Carbon steel ASTM A 105, with corrosion resistant two component epoxy coating (min. 150 µm) or Stainless steel AISI 304/1.4301 flanges and carbon steel housing, with corrosion resistant two component epoxy coating (min. 150 µm) or Stainless steel AISI 316L/1.4404 flanges and housing, polished	Carbon steel ASTM A 105, with corrosion resistant two component epoxy coating (min. 150 µm) or AISI 304/1.4301 flanges and carbon steel housing, with corrosion resistant two component epoxy coating (min. 150 µm) or AISI 316L/1.4404 flanges and housing, polished
Measuring pipe material	Stainless steel AISI 304/1.4301	AISI 304/1.4301
Electrode material	• Stainless steel AISI 316Ti/1.4571 • Hastelloy C276/2.4819 (PFA: Hastelloy C22/2.4602) • Platinum/Iridium • Titanium • Tantalum	• AISI 316Ti/1.4571 • Hastelloy C276/2.4819 (PFA: Hastelloy C22/2.4602) • Platinum/Iridium • Titanium • Tantalum
Grounding electrode material	• Soft rubber, EPDM, Linatex, Ebonite: available with measuring electrodes in stainless steel AISI 316Ti/1.4571 or Hastelloy • PTFE: none • PFA: optional in Hastelloy, Tantalum or Platinium	• PTFE: none • PFA: optional in Hastelloy, Tantalum or Platinium

© Siemens AG 2013

Version	MAG 3100	MAG 3100 HT (High Temperature)
Design (continued)		
Terminal box (remote version only)	• Standard fibre glass reinforced polyamide • Option Stainless steel AISI 316/1.4436 • Ex Stainless steel AISI 316/1.4436	• Standard fibre glass reinforced polyamide (max. 150 °C (302 °F)) • Stainless steel AISI 316/1.4436 • Ex Stainless steel AISI 316/1.4436
Cable entries	• Remote installation 2 x M20 or 2 x ½" NPT • Compact installation - MAG 5000/MAG 6000: 4 x M20 or 4 x ½" NPT - MAG 6000 I: 2 x M25 or 2 x ½" NPT (for supply/output) - MAG 6000 I Ex: 2 x M25 or 2 x ½" NPT (for supply/output)	• Remote installation 2 x M20 or 2 x ½" NPT
Certificates and approvals		
Calibration		
Standard production calibration, calibration report shipped with sensor	Zero-point, 2 x 25 % and 2 x 90 % (default)	Zero-point, 2 x 25 % and 2 x 90 % (default)
Conforms to	PED (All EN1092-1 flanges conforms to PED) – 97/23/EC[3] CRN	PED (All EN1092-1 flanges conforms to PED) – 97/23/EC[3] CRN
Material certificate EN 10204-3.1	On request	On request
Ex approvals	Ex sensors • ATEX 2 GD DN 15 ... 300: EEx d e ia IIC T4 - T6 • DN 350 ... 2000: EEx e ia IIC T4 - T6 • IEC Ex de ia IIC T3-T6 • FM Class I, Div 1[4] • FM Class I, Zone 1 • CSA Class I, Zone 1 Standard sensors • FM Class I, Div 2/Zone 2 • CSA Class I, Div 2/Zone 2	Ex sensors • ATEX 2 GD DN 15 ... 300: EEx d e ia IIC T3 - T6 • IEC Ex de ia IIC T3-T6 • FM Class I, Div 1[4] • FM Class I, Zone 1 • CSA Class I, Zone 1 Standard sensors • FM Class I, Div 2/Zone 2 • CSA Class I, Div 2/Zone 2
Drinking water approvals	EPDM lining: • WRAS (WRc, BS690 cold water, GB) • NSF/ANSI Standard 61[5] (Cold water, US) • ACS listed (F) • DVGW W270 (D) • Belgaqua (B) • MCERTS (GB) (EPDM or PTFE lining with AISI 316 or Hastelloy electrodes)	
Custody transfer (CT) (≤ DN2000) (only together with MAG 5000/6000 CT), order as special	Cold water pattern approval - DANAK TS 22.36.001, PTB (Denmark and Germany) Hot water pattern approval - PTB (Germany) Other media than water - OIML R 117 (Denmark)	Hot water pattern approval - PTB (Germany)

Technical specification for transmitter - see transmitter pages.

1) PN 6-40: DN ≤ 600 type 01 (SORF); DN > 600 type 11 (WNRF); PN 63-100: type 11 (WNRF)

2) With compact transmitter MAG 5000 CT/6000 CT -20 ... +50 °C (-4 ... +122 °F).

3) For sizes larger than 600 mm (24") in PN 16 PED conformity is available as a cost-added option. The basic unit will carry the LVD (Low Voltage Directive) and EMC approval. All products sold outside of EU and EFTA are excluded from the Pressure Equipment directive, also products sold into certain market sectors are excluded. These include:
a) Meters used in networks for the supply, distribution and discharge of water.
b) Meters used in pipelines for the conveyance of any fluid from offshore to onshore.
c) Meters used in the extraction of petroleum or gas, including christmas tree and manifold equipment.
d) Any meter mounted on a ship or mobile offshore platform. For further information on the PED standard and requirements see page 9/6.

4) Only with sensors sizes DN 15 ... 300 (½" ... 12") compact.

5) Including Annex G

© Siemens AG 2013

Selection and Ordering data	Article No.
Sensor SITRANS F M MAG 3100	**7ME6310-** ■■■■■-■■■■
Diameter	
DN 15 (½") (PTFE and PFA liner)	1 V
DN 25 (1")	2 D
DN 40 (1½")	2 R
DN 50 (2")	2 Y
DN 65 (2½")	3 F
DN 80 (3")	3 M
DN 100 (4")	3 T
DN 125 (5")	4 B
DN 150 (6")	4 H
DN 200 (8")	4 P
DN 250 (10")	4 V
DN 300 (12")	5 D
DN 350 (14")	5 K
DN 400 (16")	5 R
DN 450 (18")	5 Y
DN 500 (20")	6 F
DN 600 (24")	6 P
DN 700 (28")	6 Y
DN 750 (30") (AWWA and AS 2129 only)	7 D
DN 800 (32")	7 H
DN 900 (36")	7 M
DN 1000 (40")	7 R
DN 1050 (42") (AWWA only)	7 U
DN 1100 (44") (AWWA only)	7 V
DN 1200 (48")	8 B
DN 1400 (54")	8 F
DN 1500 (60")	8 K
DN 1600 (66")	8 P
DN 1800 (72")	8 T
DN 2000 (78")	8 Y
Flange norm and pressure rating	
EN 1092-1	
PN 6 (DN 65 ... 2000 (2½" ... 78"))	A
PN 10 (DN 200 ... 2000 (8" ... 78"))	B
PN 16 (DN 65 ... 1200 (2½" ... 48"))	C
PN 16, non-PED (DN 700 ... 2000 (28" ... 78"))	D
PN 25 (DN 200 ... 600 (8" ... 24"))[1]	E
PN 40 (DN 15 ... 600 (½" ... 24"))	F
PN 63 (DN 50 ... 300 (2" ... 12"))	G
PN 100 (DN 25 ... 300 (1" ... 12"))	H
ANSI B16.5	
Class 150 (½" ... 24")	J
Class 300 (½" ... 24")	K
AWWA C-207	
Class D (28" ... 78")	L
AS	
2129, table E	M
4087, PN 16 (DN 50 ... 1200 (2" ... 48")) (Not PTFE and PFA)	N
4087, PN 21 (DN 50 ... 600 (2" ... 24")) (Not PTFE and PFA)	P
4087, PN 35 (DN 50 ... 600 (2" ... 24")) (Not PTFE and PFA)	Q
JIS B 2220:2004	
K10 (1" ... 24")	R
K20 (1" ... 24")	S

Selection and Ordering data	Article No.
Sensor SITRANS F M MAG 3100	**7ME6310-** ■■■■■-■■■■
Flange material	
Carbon steel flanges ASTM A 105	1
Stainless steel flanges, AISI 304/1.4301	2
Stainless steel flanges and sensor body, AISI 316L/1.4404, polished	3
Liner material	
Soft rubber	1
EPDM	2
PTFE (DN ≤ 300, PN ≤ 50 bar / ≤ 12", PN ≤ 725 psi), PTFE (350 ≤ DN ≤ 600, PN ≤ 40 bar / 14" ≤ DN ≤ 24", PN ≤ 580 psi)	3
Ebonite	4
Linatex (PN ≤ 40 bar (580 psi) DN ≤ 600 (24"))	5
PFA (DN 15 ... 150 (½" ... 6")) (PN ≤ 40 bar (580 psi))	7
Electrode material (Grounding electrodes not for PTFE liner or Pressure PN 100)	
AISI 316Ti/1.4571 (not for PFA)	1
Hastelloy C276/2.4819 (PFA liner: Hastelloy C22/2.4602)	2
Platinum (DN ≤ 300 (12")) (not ebonite liner)	3
Titanium (not PFA liner) (DN ≤ 600 (24"))	4
Tantalum (DN ≤ 600 (24")) (not ebonite liner)	5
Hastelloy C22/2.4602 incl. grounding electrodes (only PFA)	6
Platinium incl. grounding electrodes (only PFA)	7
Tantalum incl. grounding electrodes (only PFA)	8
Transmitter with display	
Standard sensor for remote transmitter (Order transmitter separately)	A
Ex sensor for remote transmitter (Order transmitter separately)	B
MAG 6000 I, Alu.18 ... 90 V DC, 115 ... 230 V AC	C
MAG 6000 I Alu. 18 ... 30 V DC, Ex	D
MAG 6000 I Alu. 115 ... 230 V, Ex	E
MAG 6000 Polyamide, 11... 30 V DC / 11...24 V AC	H
MAG 6000, Polyamide, 115 ... 230 V AC	J
MAG 5000, Polyamide, 11... 30 V DC / 11...24 V AC	K
MAG 5000, Polyamide, 115 ... 230 V AC	L
Communication	
No communication, add-on possible	A
HART	B
PROFIBUS PA Profile 3 (only MAG 6000/MAG 6000 I)	F
PROFIBUS DP Profile 3 (not for Ex) (only MAG 6000/MAG 6000 I)	G
Modbus RTU/RS 485 (not for Ex) (only MAG 6000/MAG 6000 I)	E
FOUNDATION Fieldbus H1 (only MAG 6000/MAG 6000 I)	J
Cable glands/terminal box	
Metric: Polyamide terminal box or 6000 I compact	1
½" NPT: Polyamide terminal box or 6000 I compact	2
Metric: SS terminal box (mandatory for stainless steel MAG 6000 Transmitter)	3
½" NPT: SS terminal box (mandatory for stainless steel MAG 6000 Transmitter)	4

[1] Under preparation

✵ We can offer shorter delivery times for configurations designated with the Quick Ship Symbol ✵. For details see page 9/5 in the appendix.

© Siemens AG 2013

Selection and Ordering data	Order code
Additional information	
Please add **"-Z"** to Article No. and specify Order code(s) and plain text.	
Factory certificate according to EN 10204-2.2	**C14**
Factory certificate according to EN 10204-2.1	**C15**
Tag name plate, stainless steel fixed with SS wire (add plain text)	**Y17**
Tag name plate, plastic (self adhesive)	**Y18**
Customer-specific converter setup	**Y20**
Sensor cables wired (specify cable Article No.)	**Y40**
Sensor for remote transmitter's junction box potted to IP68 with wired cable (specify cable Article No.) (not for Ex)	**Y41**
Other postproduction requirements (add desired text)	**Y99**
Additional calibrations	
• Accredited Siemens Flow Instruments matched pair Calibration acc. to ISO/IEC 17025: 2005	**On request**[1]
• CT verification and authority seal according to: Cold water pattern approval - DANAK TS 22.36.001, PTB (Denmark and Germany)	**On request**[1]
• Customer-witnessed calibration Any of above calibration	**On request**[1]

[1] Ordering On request as dedicated information from the customer on the individual sensors is required. Please fill in the calibration form found on pi.khe.siemens.de/index.aspx?hr=17460 and send together with the order. (Size dependent restriction on maximum flow rates may apply)

Operating instructions for SITRANS F M MAG 3100

Description	Article No.
• English	**A5E03005599**
• German	**A5E03086288**
• Spanish	**A5E03086291**
• French	**A5E03086290**

This device is shipped with a Quick Start guide and a CD containing further SITRANS F literature.

All literature is also available for free at:
http://www.siemens.com/flowdocumentation

Accessories

Description	Article No.
Potting kit for terminal box of flow sensors for IP68/NEMA 6P (not for Ex sensors)	✹ **FDK:085U0220**

✹ We can offer shorter delivery times for configurations designated with the Quick Ship Symbol ✹. For details see page 9/5 in the appendix.

Please use online Product selector to get latest updates.

Product selector link:
www.pia-selector.automation.siemens.com

MAG 5000/6000 transmitters and sensors are packed in separate boxes, the final assembly takes place during installation at the customer's place. MAG 6000 I/MAG 6000 I ATEX 2G D transmitters and sensors are delivered compact mounted from factory.
Communication module will be pre-mounted in the transmitter.

© Siemens AG 2013

Flow sensor MAG 3100 and MAG 3100 HT

Selection and Ordering data	Article No. 7ME6320- ■■■■■-■■■■
Sensor SITRANS F M MAG 3100 HT (High Temperature)	
Diameter	
DN 15 (½")	1 V
DN 25 (1")	2 D
DN 40 (1½")	2 R
DN 50 (2")	2 Y
DN 65 (2½")	3 F
DN 80 (3")	3 M
DN 100 (4")	3 T
DN 125 (5")	4 B
DN 150 (6")	4 H
DN 200 (8")	4 P
DN 250 (10")	4 V
DN 300 (12")	5 D
Flange norm and pressure rating	
EN 1092-1	
PN 10 (DN 200 ... 300 (8" ... 12"))	B
PN 16 (DN 65 ... 300 (2½" ... 12"))	C
PN 25 (DN 200 ... 300 (8" ... 12"))	E
PN 40 (DN 15 ... 300 (½" ... 12"))	F
ANSI B16.5	
Class 150 (½" ... 12")	J
Class 300 (½" ... 12")	K
AS	
2129, table E	M
Flange material	
Carbon steel flanges ASTM A 105	1
Stainless steel flanges, AISI 304/1.4301	2
Stainless steel flanges and sensor body, AISI 316L/1.4404, polished	3
Liner material	
PTFE (130 °C (266 °F))	2
PTFE including type E protection rings AISI 316/1.4436 (180 °C (356 °F))	3
PFA (150 °C (302 °F)) (DN 15 ... 150 (½" ... 6"))	7
Electrode material	
AISI 316Ti/1.4571 (not for PFA)	1
Hastelloy C276/2.4819 (PFA liner: Hastelloy C22/2.4602)	2
Platinum	3
Titanium (not for PFA)	4
Tantalum	5
Hastelloy C22/2.4602 incl. grounding electrodes (only PFA)	6
Platinium incl. grounding electrodes (only PFA)	7
Tantalum incl grounding electrodes (only PFA)	8
Transmitter with display	
Standard sensor for remote transmitter (Order transmitter separately)	A
Ex sensor for remote transmitter (Order transmitter separately)	B
MAG 6000 I, Alu.18 ... 90 V DC, 115 ... 230 V AC	C
MAG 6000 I, Alu. 18 ... 30 V DC, Ex	D
MAG 6000 I, Alu. 115 ... 230 V AC, Ex	E
MAG 6000, Polyamide, 11 ... 30 V DC/ 11 ... 24 V AC	H
MAG 6000, Polyamide, 115 ... 230 V AC	J
MAG 5000, Polyamide, 11 ... 30 V DC/ 11 ... 24 V AC	K
MAG 5000, Polyamide, 115 ... 230 V AC	L

Selection and Ordering data	Article No. 7ME6320- ■■■■■-■■■■
Sensor SITRANS F M MAG 3100 HT (High Temperature)	
Communication	
No communication, add-on possible	A
HART	B
PROFIBUS PA Profile 3 (only MAG 6000/MAG 6000 I)	F
PROFIBUS DP Profile 3 (only MAG 6000/MAG 6000 I)	G
Modbus RTU/RS 485 (only MAG 6000/MAG 6000 I)	E
FOUNDATION Fieldbus H1 (only MAG 6000/MAG 6000 I)	J
Cable glands/terminal box	
Metric: Polyamide terminal box (PTFE 130 °C (266 °F)) or 6000 I compact	1
½" NPT: Polyamide terminal box (PTFE 130 °C (266 °F)) or 6000 I compact	2
Metric: SS terminal box (mandatory for Stainless steel MAG 6000 Transmitter)	3
½" NPT: SS terminal box (mandatory for Stainless steel MAG 6000 Transmitter)	4

Selection and Ordering data	Order code
Additional information	
Please add **"-Z"** to Article No. and specify Order code(s) and plain text.	
Factory certificate according to EN 10204-2.2	**C14**
Factory certificate according to EN 10204-2.1	**C15**
Customer-specific converter setup	**Y20**
Tag name made, stainless steel fixed with SS wire (add plain text)	**Y17**
Tag name plate, plastic (self adhesive)	**Y18**
Sensor cables wired (specify cable Article No.)	**Y40**
Sensor for remote transmitter's junction box potted to IP68 with wired cable (specify cable Article No.) (not for Ex)	**Y41**
Other postproduction requirements (add desired text)	**Y99**
Additional calibrations	
• Matched pair - (Standard production calibration where sensor and transmitter is calibrated together)	**On request[1)]**
• Accredited Siemens Flow Instruments matched pair Calibration acc. to ISO/IEC 17025: 2005	**On request[1)]**
• Customer-specified calibration up to 10 points	**On request[1)]**
• CT verification and authority seal according to: Cold water pattern approval - DANAK TS 22.36.001, PTB (Denmark and Germany)	**On request[1)]**
• Customer-witnessed calibration Any of above calibration	**On request[1)]**

1) Ordering On request as dedicated information from the customer on the individual sensors is required. Please fill in the calibration form found on http://pi.kha.siemens.de/index.aspx?Nr=17460 and send together with the order. (Size dependent restriction on maximum flow rates may apply)

© Siemens AG 2013

Selection and Ordering data

MAG 3100 and MAG 3100 HT[1] Type C Grounding and protection rings

1 pc. AISI 304 grounding and protection ring **type C** for all liners except PTFE and PFA

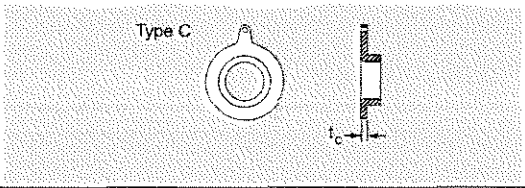

DN	PN 6 Article No.	PN 10 Article No.	PN 16 Article No.	PN 25 Article No.	PN 40 Article No.	AS 2129 Table E Article No.
DN 25					FDK:083N8361	FDK:083N8361
DN 40					FDK:083N8362	FDK:083N8362
DN 50					FDK:083N8344	FDK:083N8344
DN 65	FDK:083N8345		FDK:083N8345		FDK:083N8345	FDK:083N8346
DN 80	FDK:083N8347		FDK:083N8347		FDK:083N8347	FDK:083N8347
DN 100	FDK:083N8070		FDK:083N8025		FDK:083N8025	FDK:083N8025
DN 125	FDK:083N8071		FDK:083N8071		FDK:083N8071	FDK:083N8071
DN 150	FDK:083N8072		FDK:083N8008		FDK:083N8008	FDK:083N8008
DN 200	FDK:083N8074	FDK:083N8011	FDK:083N8011	FDK:083N8011	FDK:083N8075	FDK:083N8011
DN 250	FDK:083N8078	FDK:083N8013	FDK:083N8013	FDK:083N8013	FDK:083N8079	FDK:083N8013
DN 300	FDK:083N8080	FDK:083N8012	FDK:083N8012	FDK:083N8081	FDK:083N8082	FDK:083N8012
DN 350	FDK:083N8083	FDK:083N8039	FDK:083N8039	FDK:083N8084	FDK:083N8085	FDK:083N8039
DN 400	FDK:083N8099	FDK:083N8100	FDK:083N8100	FDK:083N8101	FDK:083N8102	FDK:083N8100
DN 450	FDK:083N8103	FDK:083N8103	FDK:083N8104	FDK:083N8104	FDK:083N8105	FDK:083N8104
DN 500	FDK:083N8107	FDK:083N8107	FDK:083N8108	FDK:083N8108	FDK:083N8109	FDK:083N8108
DN 600	FDK:083N8111	FDK:083N8111	FDK:083N8112	FDK:083N8112		FDK:083N8113
DN 700	FDK:083N8300	FDK:083N8294	FDK:083N8294			FDK:083N8372
DN 750						
DN 800	FDK:083N8303	FDK:083N8304	FDK:083N8304			FDK:083N8373
DN 900	FDK:083N8306	FDK:083N8307	FDK:083N8307			FDK:083N8396
DN 1000	FDK:083N8309	FDK:083N8310	FDK:083N8310			FDK:083N8397
DN 1100		FDK:083N8367	FDK:083N8367			FDK:083N8367
DN 1200	FDK:083N8312	FDK:083N8313	FDK:083N8313			FDK:083N8398
DN 1400	FDK:083N8467	FDK:083N8468	FDK:083N8469			
DN 1500	FDK:083N8471	FDK:083N8472	FDK:083N8473			
DN 1600	FDK:083N8475	FDK:083N8476	FDK:083N8477			
DN 1800	FDK:083N8479	FDK:083N8480	FDK:083N8481			
DN 2000	FDK:083N8483	FDK:083N8484	FDK:083N8485			

[1] Also for MAG 5100 W (7ME6520 > DN 300; and 7ME6580).

Size	ANSI Class 150 Article No.	Class 300 Article No.	JIS K10 Article No.	JIS K20 Article No.
1"	FDK:083N8361	FDK:083N8361	FDK:083N8361	FDK:083N8361
1½"	FDK:083N8362	FDK:083N8362	FDK:083N8362	FDK:083N8362
2"	FDK:083N8344	FDK:083N8344	FDK:083N8344	FDK:083N8344
2½"	FDK:083N8345	FDK:083N8345	FDK:083N8345	FDK:083N8345
3"	FDK:083N8347	FDK:083N8347	FDK:083N8347	FDK:083N8347
4"	FDK:083N8025	FDK:083N8025	FDK:083N8070	FDK:083N8025
5"	FDK:083N8071	FDK:083N8071	FDK:083N8071	FDK:083N8071
6"	FDK:083N8008	FDK:083N8073	FDK:083N8008	FDK:083N8008
8"	FDK:083N8011	FDK:083N8076	FDK:083N8011	FDK:083N8011
10"	FDK:083N8013	FDK:083N8079	FDK:083N8013	FDK:083N8079
12"	FDK:083N8012	FDK:083N8082	FDK:083N8012	FDK:083N8081
14"	FDK:083N8039	FDK:083N8085	FDK:083N8083	FDK:083N8039
16"	FDK:083N8100	FDK:083N8102	FDK:083N8100	FDK:083N8101
18"	FDK:083N8104	FDK:083N8106	FDK:083N8103	FDK:083N8104
20"	FDK:083N8107	FDK:083N8110	FDK:083N8107	FDK:083N8108
24"	FDK:083N8113	FDK:083N8114	FDK:083N8111	FDK:083N8112

Size	AWWA C-207 Article No.
28"	FDK:083N8302
30"	FDK:083N8366
32"	FDK:083N8305
36"	FDK:083N8308
40"	FDK:083N8311
42"	FDK:083N8394
44"	FDK:083N8395
48"	FDK:083N8314
54"	FDK:083N8470
60"	FDK:083N8474
66"	FDK:083N8478
72"	FDK:083N8482
78"	FDK:083N8486

© Siemens AG 2013

Selection and Ordering data

MAG 3100 and 3100 HT Type E grounding and protection ring

1 pc. AISI 316 grounding and protection ring **type E** for PTFE liners

Note:
For MAG 3100 HT High temperature version 7ME6320... for PTFE 180 °C (356 °C) versions - grounding ring type E is included and factory mounted.

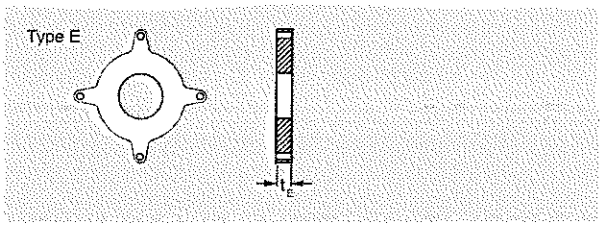

DN	PN 6 Article No.	PN 10 Article No.	PN 16 Article No.	PN 25 Article No.	PN 40 Article No.
DN 15					FDK:083N8365
DN 25					FDK:083N8271
DN 40					FDK:083N8278
DN 50					FDK:083N8282
DN 65	FDK:083N8284		FDK:083N8285		FDK:083N8286
DN 80	FDK:083N8288		FDK:083N8289		FDK:083N8290
DN 100	FDK:083N8116		FDK:083N8117		FDK:083N8118
DN 125	FDK:083N8120		FDK:083N8121		FDK:083N8122
DN 150	FDK:083N8124		FDK:083N8125		FDK:083N8126
DN 200	FDK:083N8129	FDK:083N8130	FDK:083N8130	FDK:083N8131	FDK:083N8132
DN 250	FDK:083N8135	FDK:083N8136	FDK:083N8137	FDK:083N8138	FDK:083N8139
DN 300	FDK:083N8144	FDK:083N8144	FDK:083N8145	FDK:083N8146	FDK:083N8147
DN 350	FDK:083N8152	FDK:083N8153	FDK:083N8154	FDK:083N8155	FDK:083N8156
DN 400	FDK:083N8160	FDK:083N8161	FDK:083N8162	FDK:083N8163	FDK:083N8164
DN 450	FDK:083N8168	FDK:083N8169	FDK:083N8170	FDK:083N8171	FDK:083N8172
DN 500	FDK:083N8177	FDK:083N8178	FDK:083N8179	FDK:083N8180	FDK:083N8181
DN 600	FDK:083N8186	FDK:083N8187	FDK:083N8188	FDK:083N8189	

Protection of PTFE liner use 2 pcs.
Earthing of PTFE lined flowmeter use 1 pc.

Size	ANSI Class 150 Article No.	Class 300 Article No.	JIS K10 Article No.	JIS K20 Article No.
½"	FDK:083N8365	FDK:083N8365		
1"	FDK:083N8272	FDK:083N8272	FDK:083N8271	FDK:083N8271
1½"	FDK:083N8279	FDK:083N8279	FDK:083N8278	FDK:083N8278
2"	FDK:083N8283	FDK:083N8283	FDK:083N8282	FDK:083N8282
2½"	FDK:083N8287	FDK:083N8287	FDK:083N8285	FDK:083N8285
3"	FDK:083N8291	FDK:083N8292	FDK:083N8288	FDK:083N8289
4"	FDK:083N8118	FDK:083N8119	FDK:083N8116	FDK:083N8117
5"	FDK:083N8122	FDK:083N8123	FDK:083N8121	FDK:083N8122
6"	FDK:083N8126	FDK:083N8127	FDK:083N8125	FDK:083N8126
8"	FDK:083N8370	FDK:083N8133	FDK:083N8130	FDK:083N8370
10"	FDK:083N8140	FDK:083N8141	FDK:083N8137	FDK:083N8139
12"	FDK:083N8148	FDK:083N8149	FDK:083N8144	FDK:083N8146
14"	FDK:083N8157	FDK:083N8158	FDK:083N8152	FDK:083N8154
16"	FDK:083N8165	FDK:083N8166	FDK:083N8160	FDK:083N8165
18"	FDK:083N8173	FDK:083N8174	FDK:083N8169	FDK:083N8171
20"	FDK:083N8182	FDK:083N8183	FDK:083N8178	FDK:083N8180
24"	FDK:083N8190	FDK:083N8191	A5E32709738	A5E32710253

Protection of PTFE liner use 2 pcs.
Grounding of PTFE lined flowmeter use 1 pc.

AS2129, Table E DN	Article No.
DN 15	FDK:083N8365
DN 25	FDK:083N8272
DN 40	FDK:083N8280
DN 50	FDK:083N8281
DN 65	FDK:083N8284
DN 80	FDK:083N8293
DN 100	FDK:083N8117
DN 125	FDK:083N8121
DN 150	FDK:083N8128
DN 200	FDK:083N8134
DN 250	FDK:083N8143
DN 300	FDK:083N8151
DN 350	FDK:083N8153
DN 400	FDK:083N8161
DN 450	FDK:083N8176
DN 500	FDK:083N8185
DN 600	A5E32710253

Protection of PTFE liner use 2 pcs.
Grounding of PTFE lined flowmeter use 1 pcs.

© Siemens AG 2013

Selection and Ordering data

MAG 3100 and MAG 3100 HT type E grounding and protecting ring

1 pc. Hastelloy C276 grounding and protection ring **type E** for PTFE liners

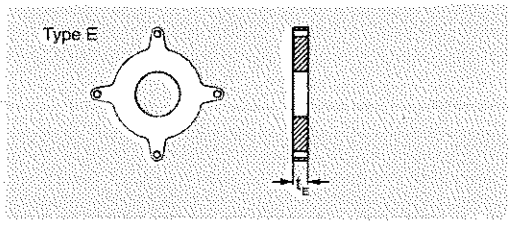

DN	PN 6 Article No.	PN 16 Article No.	PN 40 Article No.	Size	ANSI Class 150 Article No.	Class 300 Article No.
DN 15			**FDK:083N8487**	½"	**FDK:083N8487**	**FDK:083N8487**
DN 25			**FDK:083N8488**	1"	**FDK:083N8489**	**FDK:083N8489**
DN 40			**FDK:083N8490**	1½"	**FDK:083N8491**	**FDK:083N8491**
DN 50			**FDK:083N8492**	2"	**FDK:083N8493**	**FDK:083N8493**
DN 65	**FDK:083N8494**	**FDK:083N8495**	**FDK:083N8496**	2½"	**FDK:083N8497**	**FDK:083N8497**
DN 80	**FDK:083N8498**	**FDK:083N8499**	**FDK:083N8500**	3"	**FDK:083N8501**	**FDK:083N8502**
DN 100	**FDK:083N8503**	**FDK:083N8504**	**FDK:083N8505**	4"	**FDK:083N8506**	**FDK:083N8507**

Selection and Ordering data

MAG 3100 and MAG 3100 HT[1] Grounding rings: Flat rings

1 pc. **AISI 316** grounding **flat ring** for all liners (PTFE max. 130 °C (266 °F))

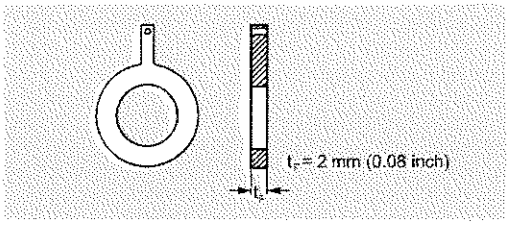

DN	PN 10 Article No.	PN 16 Article No.	PN 40 Article No.	Size	ANSI Class 150 Article No.	Class 300 Article No.
DN 15			**A5E01191969**	½"	**A5E01191968**	
DN 25			**A5E01150880**	1"	**A5E01150022**	**A5E01150378**
DN 40			**A5E01191952**	1½"	**A5E01191961**	
DN 50			**A5E01150918**	2"	**A5E01151121**	**A5E01151194**
DN 65		**A5E01191940**	**A5E01191954**	2½"	**A5E01191962**	
DN 80		**A5E01152876**	**A5E01152876**	3"	**A5E01152910**	**A5E01153422**
DN 100		**A5E01158875**	**A5E01159072**	4"	**A5E01159146**	**A5E01159628**
DN 125		**A5E01191941**	**A5E01191956**	5"	**A5E01191963**	
DN 150		**A5E01191943**	**A5E01191957**	6"	**A5E01191964**	
DN 200	**A5E01191951**	**A5E01191944**	**A5E01191958**	8"	**A5E01191965**	
DN 250	**A5E01191950**	**A5E01191946**	**A5E01191959**	10"	**A5E01191966**	
DN 300	**A5E01191949**	**A5E01191947**	**A5E01191960**	12"	**A5E01191967**	

[1] Also for MAG 5100 W (7ME6520 DN 40 ... 300)

© Siemens AG 2013

Selection and Ordering data

MAG 3100 and MAG 3100 HT Grounding rings : Flat rings

1 pc. **Hastelloy** C276 grounding **flat ring** for all liners (PTFE max. 130 °C (266 °F))

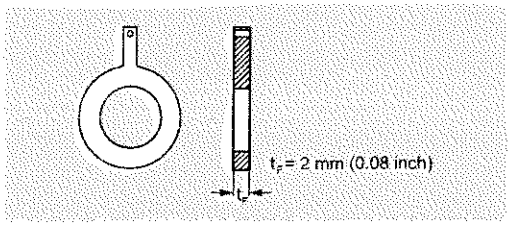

DN	PN 10 Article No.	PN 16 Article No.	PN 40 Article No.	Size	ANSI Class 150 Article No.	Class 300 Article No.
DN 15			**A5E01191981**	½"	**A5E01191989**	
DN 25			**A5E01150882**	1"	**A5E01150028**	**A5E01150379**
DN 40			**A5E01191982**	1½"	**A5E01191990**	
DN 50			**A5E01150922**	2"	**A5E01151124**	**A5E01151197**
DN 65		**A5E01191971**	**A5E01191983**	2½"	**A5E01191991**	
DN 80		**A5E01152889**	**A5E01152889**	3"	**A5E01152913**	**A5E01153424**
DN 100		**A5E01158886**	**A5E01159074**	4"	**A5E01159150**	**A5E01159629**
DN 125		**A5E01191973**	**A5E01191984**	5"	**A5E01191992**	
DN 150		**A5E01191974**	**A5E01191985**	6"	**A5E01191993**	
DN 200	**A5E01191978**	**A5E01191975**	**A5E01191986**	8"	**A5E01191994**	
DN 250	**A5E01191979**	**A5E01191976**	**A5E01191987**	10"	**A5E01191995**	
DN 300	**A5E01191980**	**A5E01191977**	**A5E01191988**	12"	**A5E01191996**	

Selection and Ordering data

MAG 3100 and MAG 3100 HT Grounding rings : Flat rings

1 pc. **Tantalum** grounding **flat ring** for all liners (PTFE max. 130 °C (266 °F))

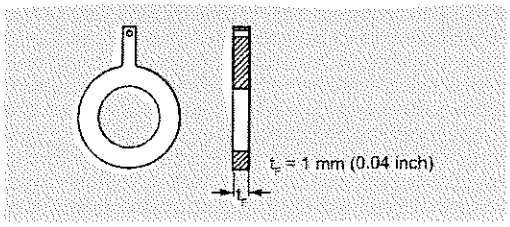

DN	PN 16 Article No.	PN 40 Article No.	Size	ANSI Class 150 Article No.	Class 300 Article No.
DN 15		**A5E01192007**	½"	**A5E01192010**	
DN 25		**A5E01150883**	1"	**A5E01150030**	**A5E01150381**
DN 40		**A5E01192008**	1½"	**A5E01192011**	
DN 50		**A5E01150926**	2"	**A5E01151129**	**A5E01151199**
DN 65	**A5E01192005**	**A5E01192009**	2½"	**A5E01192012**	
DN 80	**A5E01152890**	**A5E01152890**	3"	**A5E01152916**	**A5E01153427**
DN 100	**A5E01158891**	**A5E01159076**	4"	**A5E01159156**	**A5E01159631**

© Siemens AG 2013

Dimensional drawings

MAG 3100 and MAG 3100 HT sensor with compact or remote transmitter

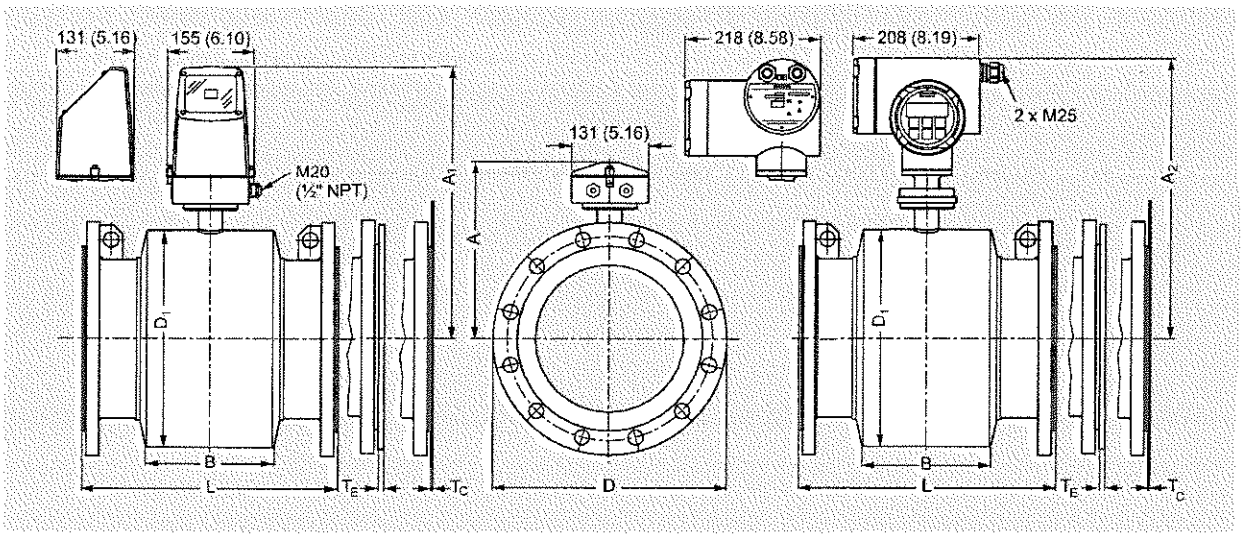

Dimensions in mm (inch)

Metric

DN	A[1]	A_1	A_2	B	D_1	L[2] EN 1092-1-201 PN 6, 10	PN 16/ PN 16 non-PED	PN 25	PN 40	PN 63	PN 100	ANSI 16.5/ASME B16.47[3] Class 150	Class 300	Class 600
[mm]	[mm]	[mm]	[mm]	[mm]	[mm]	[mm]	[mm]	[mm]	[mm]	[mm]	[mm]	[mm]	[mm]	[mm]
15	187	341	338	59	104	-	-	-	200	-	-	200	200	-
25	187	341	338	59	104	-	-	-	200	-	260	200	200	280
40	197	351	348	82	124	-	-	-	200	-	280	200	200	320
50	205	359	356	72	139	-	-	-	200	276	300	200	200	330
65	212	366	363	72	154	200	200/-	-	200	320	350	200	272	on request
80	222	376	373	72	174	200	200/-	-	272[4]	323	340	272[4]	272[4]	350
100	242	396	393	85	214	250	250/-	-	250	380	400	250	310	460
125	255	409	406	85	239	250	250/-	-	250	420	450	250	335	480
150	276	430	427	85	282	300	300/-	-	300	415	450	300	300	500
200	304	458	455	137	338	350	350/-	350	350	480	530	350	350	600
250	332	486	483	157	393	450	450/-	450	450	550	620	450	450	600
300	357	511	508	157	444	500	500/-	500	500	600	680	500	500	700
350	362	516	513	270	451	550	550/-	550	550	-	-	550	550	-
400	387	541	538	270	502	600	600/-	600	600	-	-	600	600	-
450	418	572	569	310	563	600	600/-	600	600	-	-	600	640	-
500	443	597	594	350	614	600	600/-	625	680	-	-	600	730	-
600	494	648	645	320	715	600	600/-	750	800	-	-	600	860	-
700	544	698	695	450	816	700	875/700	800	-	-	-	800	-	-
750	571	725	722	556	869	-	-/-	-	-	-	-	950	-	-
800	606	760	757	560	927	800	1000/800	900	-	-	-	900	-	-
900	653	807	804	630	1032	900	1125/900	1000	-	-	-	1100	-	-
1000	704	858	855	670	1136	1000	1250/1000	1100	-	-	-	1100	-	-
1050	704	858	855	670	1136	-	-/-	-	-	-	-	-	-	-
1100	755	904	901	770	1238	-	-/-	-	-	-	-	-	-	-
1200	810	964	961	792	1348	1200	1500/1200	1300	-	-	-	1400	-	-
1400	925	1079	1076	1000	1574	1400	-/1400	-	-	-	-	-	-	-
1500	972	1126	1123	1020	1672	1500	-/1500	-	-	-	-	-	-	-
1600	1025	1179	1176	1130	1774	1600	-/1600	-	-	-	-	-	-	-
1800	1123	1277	1274	1250	1974	1800	-/1800	-	-	-	-	-	-	-
2000	1223	1377	1374	1375	2174	2000	-/2000	-	-	-	-	-	-	-

1) 14.5 mm shorter with AISI terminal box (Ex and high temperature version)
2) When earthing flanges are used, the thickness of the earthing flange must be added to the built-in length
3) ANSI 16.5 for DN ≤ 600; ASME B16.47 for DN ≥ 700
4) Not according to ISO 13359

© Siemens AG 2013

DN [mm]	L[1] AS 2129 E AS 4087 PN 16, 21, 35 [mm]	AWWA C-207 Class D [mm]	JIS K10 [mm]	JIS K20 [mm]	T_C[2] [mm]	T_E[2] [mm]	T_F[2] [mm]	T_T[2] [mm]	Wgt.[3] [kg]
15	200	-	200	200	-	6	2	1	4
25	200	-	200	200	1.2	6	2	1	5
40	200	-	200	240	1.2	6	2	1	8
50	200	-	200	240	1.2	6	2	1	9
65	200	-	200	272	1.2	6	2	1	11
80	200[4]	-	200[8]	272[8]	1.2	6	2	1	12
100	250	-	250	310	1.2	6	2	1	16
125	250	-	250	335	1.2	6	2	-	19
150	300	-	300	300	1.2	6	2	-	27
200	350	-	350	350	1.2	8	2	-	40
250	450	-	450	450	1.2	8	2	-	60
300	500	-	500	500	1.6	8	2	-	80
350	550	-	550	550	1.6	8	-	-	110
400	600	-	600	600	1.6	10	-	-	125
450	600	-	600	640	1.6	10	-	-	175
500	600[5]	-	600	680	1.6	10	-	-	200
600	600[6]	-	600	800	1.6	10	-	-	287
700	700[7]	700	-	-	2.0	-	-	-	330
750	750[7]	750	-	-	2.0	-	-	-	360
800	800[7]	800	-	-	2.0	-	-	-	450
900	900[7]	900	-	-	2.0	-	-	-	530
1000	1000[7]	1000	-	-	2.0	-	-	-	660
1050	-	1050	-	-	2.0	-	-	-	660
1100	-	1100	-	-	2.0	-	-	-	1140
1200	1200[7]	1200	-	-	2.0	-	-	-	1180
1400	-	1400	-	-	2.0	-	-	-	1600
1500	-	1500	-	-	3.0	-	-	-	2460
1600	-	1600	-	-	3.0	-	-	-	2525
1800	-	1800	-	-	3.0	-	-	-	2930
2000	-	2000	-	-	3.0	-	-	-	3665

1) When earthing flanges are used, the thickness of the earthing flange must be added to the built-in length
2) T_C = Type C grounding ring, T_E = Type E grounding ring (Included and factory mounted on high temperature 180 °C PTFE sensor), T_F = Flat type grounding rings
3) Weights are approx. (for PN 16) without transmitter
4) PN 35 DN 80 = 272 mm (not according to ISO 13359)
5) PN 35 DN 500 = 680 mm
6) PN 35 DN 600 = 750 mm
7) Not AS 4087 PN 21 or PN 35
8) Not according to ISO 13359

- not available

D = Outside diameter of flange, see flange tables

© Siemens AG 2013

MAG 3100 and MAG 3100 HT sensor with compact or remote transmitter

Imperial

Size	A[1]	A_1	A_2	B	D_1	L[2]								
						EN 1092-1-201						ANSI 16.5/ASME B16.47[3]		
						PN 6, 10	PN 16/ PN 16 non PED	PN 25	PN 40	PN 63	PN 100	Class 150	Class 300	Class 600
[inch]	[inch]	[inch]	[inch]	[inch]	[inch]	[inch]	[inch]	[inch]	[inch]	[inch]	[inch]	[inch]	[inch]	[inch]
½	7.36	13.31	13.25	2.32	4.09	-	-	-	7.87	-	-	7.87	7.87	-
1	7.36	13.31	13.25	2.32	4.09	-	-	-	7.87		10.24	7.87	7.87	11.02
1½	7.76	13.70	13.64	3.23	4.88	-	-	-	7.87	-	11.02	7.87	7.87	12.60
2	8.07	14.01	13.95	2.83	5.47	-	-	-	7.87	10.87	11.81	7.87	7.87	12.99
2½	8.35	14.29	14.23	2.83	6.06	7.87	7.87/-	-	7.87	12.60	13.78	7.87	10.71	on request
3	8.74	14.69	14.63	2.83	6.85	7.87	7.87/-	-	10.71[4]	12.72	13.39	10.71[4]	10.71[4]	13.78
4	9.53	15.47	15.41	3.35	8.43	9.84	9.84/-	-	9.84	14.96	-	9.84	12.20	18.11
5	10.04	15.98	15.92	3.35	9.41	9.84	9.84/-	-	9.84	16.54	-	9.84	13.10	18.90
6	10.87	16.81	16.75	5.39	11.10	11.81	11.81/-	-	11.81	16.34	-	11.81	11.81	19.68
8	11.97	17.91	17.85	5.39	13.31	13.78	13.78/-	13.78	13.78	18.90	-	13.78	13.78	23.62
10	13.07	19.02	18.96	6.18	15.47	17.72	17.72/-	17.72	17.72	-	-	17.72	17.72	23.62
12	14.05	20.00	19.94	6.18	17.48	19.69	19.69/-	19.69	19.69	-	-	19.69	19.69	27.56
14	14.25	20.20	20.14	10.63	17.76	21.65	21.65/-	21.65	21.65	-	-	21.65	21.65	-
16	15.24	21.18	21.12	10.63	19.76	23.62	23.62/-	23.62	23.62	-	-	23.62	23.62	-
18	16.45	22.40	22.34	12.20	22.16	23.62	23.62/-	23.62	23.62	-	-	23.62	23.62	-
20	17.44	23.39	23.33	13.78	24.17	23.62	23.62/-	24.61	26.77	-	-	23.62	28.70	-
24	19.45	25.39	25.33	12.59	28.15	23.62	23.62/-	29.53	31.50	-	-	23.62	33.80	-
28	21.42	27.36	27.30	17.72	32.13	27.56	34.45/27.56	31.50	-	-	-	31.50	-	-
30	22.48	28.43	28.37	21.89	34.21	-	-/-	-	-	-	-	37.41	-	-
32	23.86	29.80	29.74	22.05	36.50	31.50	39.37/31.50	35.44	-	-	-	35.44	-	-
36	25.71	31.65	31.59	24.80	40.63	35.43	44.29/35.43	39.38	-	-	-	43.32	-	-
40	27.72	35.67	35.61	26.38	44.72	39.37	49.21/39.37	43.32	-	-	-	43.32	-	-
42	27.72	35.67	35.61	26.38	44.72	-	-/-	-	-	-	-	-	-	-
44	29.72	35.67	35.61	30.31	48.74	-	-/-	-	-	-	-	-	-	-
48	31.89	37.83	37.77	31.18	53.07	47.24	59.06/47.24	51.19	-	-	-	55.12	-	-
54	36.42	42.36	42.30	39.37	61.97	55.12	-/55.12	-	-	-	-	-	-	-
60	38.27	44.21	44.15	40.15	65.83	59.06	59.06/59.06	-	-	-	-	-	-	-
66	40.35	46.30	46.24	44.49	69.84	62.99	-/62.99	-	-	-	-	-	-	-
72	44.21	50.16	50.10	49.21	77.72	70.87	-/70.87	-	-	-	-	-	-	-
78	48.15	54.09	54.03	54.13	85.59	78.74	-/78.74	-	-	-	-	-	-	-

1) 0.571 inch shorter with AISI terminal box (Ex and high temperature version)
2) When earthing flanges are used, the thickness of the earthing flange must be added to the built-in length
3) ANSI 16.5 for DN ≤ 24"; ASME B16.47 for DN ≥ 28"
4) Not according to ISO 13359

© Siemens AG 2013

Size	L[1] AS 2129 E AS 4087 PN 16, 21, 35	AWWA C-207 Class D	JIS K10	JIS K20	T_C[2]	T_E[2]	T_F[2]	T_T[2]	Weight[3]
[in.]	[inch]	[inch]	[inch]	[inch]	[inch]	[inch]	[inch]	[inch]	[lb]
½	7.87	-	7.87	7.87	-	0.24	0.08	0.04	9
1	7.87	-	7.87	7.87	0.05	0.24	0.08	0.04	11
1½	7.87	-	7.87	9.44	0.05	0.24	0.08	0.04	17
2	7.87	-	7.87	9.44	0.05	0.24	0.08	0.04	20
2½	7.87	-	7.87	10.70	0.05	0.24	0.08	0.04	24
3	7.87[4]	-	7.87[8]	10.70[8]	0.05	0.24	0.08	0.04	26
4	9.84	-	9.84	12.20	0.05	0.24	0.08	0.04	35
5	9.84	-	9.84	13.18	0.05	0.24	0.08	-	42
6	11.81	-	11.81	11.81	0.05	0.24	0.08	-	60
8	13.78	-	13.77	13.77	0.05	0.31	0.08	-	88
10	17.72	-	17.71	17.71	0.05	0.31	0.08	-	132
12	19.69	-	19.68	19.68	0.06	0.31	0.08	-	176
14	21.65	-	21.65	21.65	0.06	0.31	-	-	242
16	23.62	-	23.62	23.62	0.06	0.39	-	-	275
18	23.62	-	23.62	25.19	0.06	0.39	-	-	385
20	23.62[5]	-	23.62	26.77	0.06	0.39	-	-	440
24	23.62[6]	-	23.62	31.49	0.06	0.39	-	-	633
28	27.56[7]	27.56	-	-	0.08	-	-	-	728
30	29.53[7]	29.52	-	-	0.08	-	-	-	794
32	31.50[7]	31.50	-	-	0.08	-	-	-	992
36	35.43[7]	35.43	-	-	0.08	-	-	-	1168
40	39.37[7]	39.37	-	-	0.08	-	-	-	1455
42	-	39.37	-	-	0.08	-	-	-	1455
44	-	43.31	-	-	0.08	-	-	-	2513
48	47.24[7]	47.24	-	-	0.08	-	-	-	2601
54	-	55.12	-	-	0.12	-	-	-	3528
60	-	59.06	-	-	0.12	-	-	-	5423
66	-	63.00	-	-	0.12	-	-	-	5566
72	-	70.87	-	-	0.12	-	-	-	6460
78	-	78.74	-	-	0.12	-	-	-	8080

1) When earthing flanges are used, the thickness of the earthing flange must be added to the built-in length
2) T_C = Type C grounding ring, T_E = Type E grounding ring (Included and factory mounted on high temperature 356 °F PTFE sensor), T_F = Flat type grounding rings
3) Weights are for ANSI 150 without transmitter
4) PN 35 DN 80 = 10.70 inch
5) PN 35 DN 500 = 26.77 inch
6) PN 35 DN 600 = 29.53 inch
7) Not AS 4087 PN 21 or PN 35
8) Not according to ISO 13359

- not available

D = Outside diameter of flange, see flange tables

© Siemens AG 2013

Overview

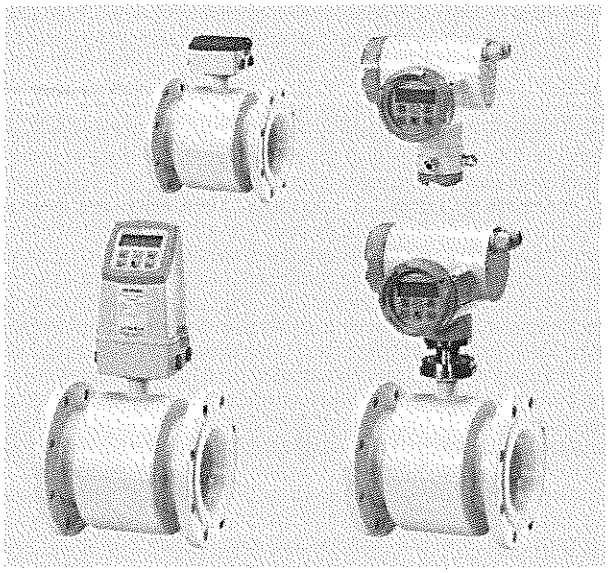

The SITRANS F M MAG 3100 P is designed to meet the most common specifications within chemical and process industries.

Benefits

- DN 15 to DN 300 (½" to 12")
- Included in Quick Ship Program (delivery time see PIA LCP)
- Most used flowmeter in the chemical and process industries with PTFE/PFA liner and Hastelloy electrodes
- Excellent chemical resistance
- Full scope of global approvals for hazardous areas:
  - ATEX, FM, CSA, IEcEx
  - 24 V and 115/230 V Ex compact and remote
  - intrinsically safe ia analog output
- Comprehensive self-diagnostic for error indication and error logging
- Fully welded construction provides a ruggedness that suits the toughest applications and environments
- Easy commissioning, the SENSORPROM unit automatically updates settings.
- MAG 6000 I full NAMUR compliance
  - compliant with NE 21, NE 32, NE 43, NE 53 and NE 70

Application

The main applications of the SITRANS F M electromagnetic flow sensors can be found in the following fields:

- Chemical industry
- Process industry
- Pulp and paper
- Industrial waste water

Design

- Compact or remote mounting possible
- Easy "plug & play" field changeability of transmitter
- High temperature sensor for applications with temperatures up to 150 °C (302 °F)
- Meets EEC directives: PED, 97/23/EC pressure directive for EN1092-1 flanges, and CRN
- Build-in length according to ISO 13359
- Onsite or factory upgrade to IP68/NEMA 6P of a standard sensor.

Mode of operation

The flow measuring principle is based on Faraday's law of electromagnetic induction according to which the sensor converts the flow into an electrical voltage proportional to the velocity of the flow.

Integration

The complete flowmeter consists of a flow sensor and an associated transmitter MAG 5000, 6000 and 6000 I.

The flexible communication concept USM II simplifies integration and update to a variety of fieldbus systems such as HART, FOUNDATION Fieldbus H1, DeviceNet, PROFIBUS DP and PA, Modbus RTU/RS 485.

Pressure/temperature curve to EN (DIN) flanges, material A 105 carbon steel

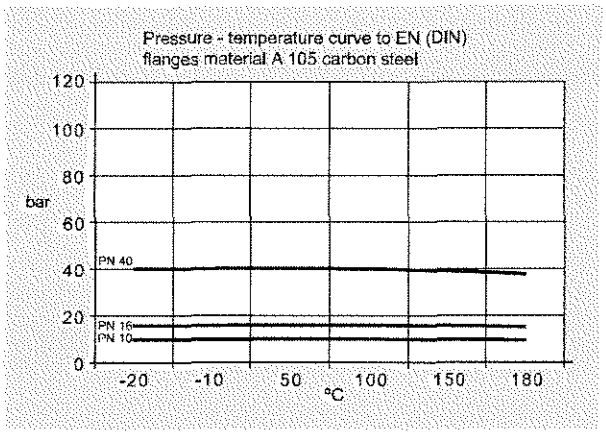

Pressure/temperature curve to ANSI B16.5 flanges

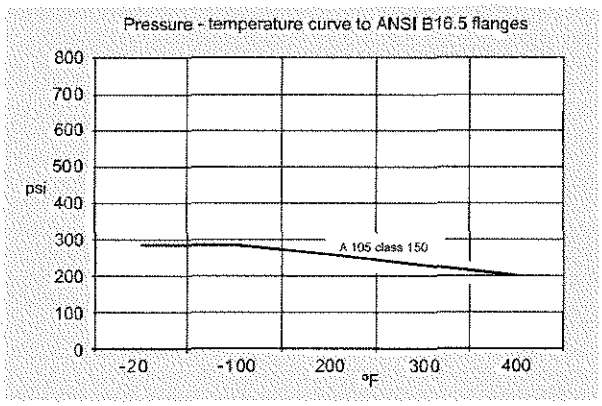

Note: The pressure-temperature curves only assist in the selection of a system. No responsibility is taken for the correctness of the information. For further information on the PED standard and requirements, see page 9/6.

© Siemens AG 2013

Technical specifications

Product characteristic	Chemical and process industry-oriented (Included in Quick Ship Program (delivery time see PIA LCP))
Nominal size	• PTFE: DN 15 ... 300 (½" ... 12") • PFA: DN 15 ... 150 (½" ... 6")
Measuring principle	Electromagnetic induction
Excitation frequency (Mains supply: 50 Hz/60 Hz)	• DN 15 ... 65 (½" ... 2½"): 12.5 Hz/15 Hz • DN 80 ... 150 (3" ... 6"): 6.25 Hz/7.5 Hz • DN 200 ... 300 (8" ... 12"): 3.125 Hz/3.75 Hz
Process connection	
Flanges	EN 1092-1, raised face[1] (EN 1092-1, DIN 2501 and BS 4504 have the same mating dimensions) • DN 15 ... 50 (½" ... 2"): PN 40 (580 psi) • DN 65 ... 300 (2½" ... 12"): PN 16 (232 psi) • DN 200 ... 300 (8" ... 12"): PN 10 (145 psi) ANSI B16.5 (~BS 1560), raised face • ½" ... 12": Class 150 (20 bar (290 psi))
Rated operation conditions	
Ambient temperature (conditions also dependent on liner characteristiques)	
• Standard sensor	-40 ... +100 °C (-40 ... +212 °F)
• Ex sensor	-20 ... +60 °C (-4 ... +140 °F)
• With compact transmitter	
- MAG 5000/6000[2]	-20 ... +60 °C (-4 ... +140 °F)
- MAG 6000 I	-20 ... +60 °C (-4 ... +140 °F)
- MAG 6000 I Ex	-20 ... +60 °C (-4 ... +140 °F)
Operating pressure [abs. bar] (maximum operating pressure decreases with increasing operating temperature and with stainless steel flanges)	• PTFE Teflon - DN 15 ... 300 (½" ... 12"): 0.3 ... 40 bar (4 ... 580 psi) • PFA - DN 15 ... 150 (½" ... 6"): Vacuum 0.02 ... 50 bar (0.29 ... 725 psi)
Enclosure rating	IP67 to EN 60529/NEMA 4X/6, 1 mH_2O for 30 min Option: IP68 to EN 60529/NEMA 6P, 10 mH_2O cont. (not for Ex)
Pressure drop at 3 m/s	As straigth pipe
Test pressure	1.5 x PN (where applicable)
Mechanical load (vibration)	• 18 ... 1000 Hz random in x, y, z, directions for 2 hours according to EN 60068-2-36 • Sensor: 3.17 grms • Sensor with compact MAG 5000/6000 mounted transmitter: 3.17 grms • Sensor with compact MAG 6000 I/6000 I Ex mounted transmitter: 1.14 grms
Temperature of medium	• PTFE -20 ... +130 °C (-4 ... +266 °F) • PFA -20 ... +150 °C (-4 ... +302 °F)
EMC	2004/108/EC

Design	
Weight	See dimensional drawings
Flange and housing material	Carbon steel ASTM A 105, with corrosion resistant two component epoxy coating (min. 150 µm)
Measuring pipe material	AISI 304/1.4301
Electrode material	PTFE: Hastelloy C276/2.4819 PFA: Hastelloy C22/2.4602
Grounding electrode material	PTFE: No grounding electrodes PFA: Hastelloy
Terminal box (remote version only)	• Standard fibre glass reinforced polyamide • Option Stainless steel AISI 316/1.4436 • Ex sensor: Stainless steel AISI 316/1.4436
Cable entries	• Remote installation 2 x M20 or 2 x ½" NPT • Compact installation - MAG 5000/MAG 6000: 4 x M20 or 4 x ½" NPT - MAG 6000 I: 2 x M25 or 2 x ½" NPT (for supply/output) - MAG 6000 I Ex: 2 x M25 or 2 x ½" NPT (for supply/output)
Certificates and approvals	
Calibration	
Standard production calibration, calibration report shipped with sensor	Zero-point, 2 x 25 % and 2 x 90 %
Conforms to	PED (All EN1092-1 flanges conforms to PED) – 97/23/EC[3] CRN
Material certificate EN 10204 3.1	On request
Ex approvals	Ex sensor • ATEX 2G D: DN 15 ... 300: EEx de ia IIC T3 - T6 • IEC Ex de ia IIC T3-T6 • FM Class I, Div 1 (compact only) • FM Class I, Zone 1 • CSA Class I, Zone 1/21 Standard sensor • FM Class I, Div 2 • CSA Class I, Div 2
Custody transfer (CT) (only together with MAG 5000/6000 CT), order as special	Hot water pattern approval - PTB (Germany) Other media than water - OIML R 117 (Denmark)

1) DN ≤ 600 type 01 (SORF); DN > 600 type 11 (WNRF)
2) With compact transmitter MAG 5000 CT/6000 CT -20 ... +50 °C (-4 ... +122 °F)
3) For further information on the PED standard and requirements, see page 9/6.

© Siemens AG 2013

Selection and Ordering data		Article No.
Sensor SITRANS F M MAG 3100 P (Short delivery time)		**7ME6340-** ■■■■■-■■■■
Diameter		
DN 15 (½")	✱	1V
DN 25 (1")	✱	2D
DN 40 (1½")	✱	2R
DN 50 (2")	✱	2Y
DN 65 (2½")	✱ [1]	3F
DN 80 (3")	✱	3M
DN 100 (4")	✱	3T
DN 125 (5")	✱	4B
DN 150 (6")	✱	4H
DN 200 (8")		4P
DN 250 (10")		4V
DN 300 (12")		5D
Flange norm and pressure rating		
EN 1092-1		
PN 10 (DN 200 ... 300 (8" ... 12"))		B
PN 16 (DN 65 ... 300 (2½" ... 12"))	✱	C
PN 40 (DN 15 ... 50 (½" ... 2")	✱	F
ANSI B16.5		
Class 150 (½" ... 12")	✱	J
Flange material		
Carbon steel flanges ASTM A 105	✱	1
Liner material		
PTFE (130 °C (266 °F))	✱	3
PFA (150 °C (302 °F)) (DN 15 ... 150 (½" ... 6"))	✱	7
Electrode material		
Hastelloy C	✱	2
Hastelloy C incl. grounding electrode, (only PFA)	✱	6
Transmitter		
Standard sensor for remote transmitter (Order transmitter separately)	✱	A
Ex sensor for remote transmitter (Order transmitter separately)	✱	B
MAG 6000 I, Aluminum, 18 ... 90 V DC, 115 ... 230 V AC	✱	C
MAG 6000 I, Aluminum, 18 ... 30 V DC, Ex	✱	D
MAG 6000 I, Aluminum, 115 ... 230 V AC, Ex	✱	E
MAG 6000 I (NAMUR), Aluminum, 18 ... 30 V DC, 115 ... 230 V AC		F
MAG 6000 I (NAMUR), Aluminum, 18 ... 30 V DC, 115 ... 230 V AC, Ex		G
MAG 6000, Polyamide, 11 ... 30 V DC/11 ... 24 V AC	✱	H
MAG 6000, Polyamide, 115 ... 230 V AC	✱	J
MAG 5000, Polyamide, 11 ... 30 V DC/11 ... 24 V AC	✱	K
MAG 5000, Polyamide, 115 ... 230 V AC	✱	L
Communication		
No communication, add-on possible	✱	A
HART	✱	B
PROFIBUS PA Profile 3 (only MAG 6000/MAG 6000 I)	✱	F
PROFIBUS DP Profile 3 (not for Ex) (only MAG 6000/MAG 6000 I)	✱	G
Modbus RTU/RS 485 (not for Ex) (only MAG 6000/MAG 6000 I)	✱	E
FOUNDATION Fieldbus H1 (only MAG 6000/MAG 6000 I)	✱	J
Cable glands/terminal box		
Metric: Polyamide terminal box or 6000 I compact	✱	1
½" NPT: Polyamide terminal box or 6000 I compact	✱	2
Metric SS terminal box (mandatory for stainless steel MAG 6000 transmitter)		3
½" NPT SS terminal box (mandatory for stainless steel MAG 6000 transmitter)		4

[1] Only for ANSI flanges

Selection and Ordering data	Order code
Additional Information	
Please add **"-Z"** to Article No. and specify Order code(s) and plain text.	
Factory certificate according to EN 10204-2.2	**C14**
Factory certificate according to EN 10204-2.1	**C15**
Tag name plate, stainless steel fixed with SS wire (add plain text)	**Y17**
Tag name plate, plastic (self adhesive)	**Y18**
Customer-specific converter setup	**Y20**
Power cable wired (specify cable Article No.)	**Y40**
Sensor for remote transmitter's junction box IP68 with wired cable (specify cable Article No.) (not for ATEX)	**Y41**
Other postproduction requirements (add desired text)	**Y99**
Additional calibrations	
• Matched pair - (Standard production calibration where sensor and transmitter is calibrated together)	**On request[1]**
• Accredited Siemens Flow Instruments matched pair Calibration acc. to ISO/IEC 17025: 2005	**On request[1]**
• Customer-specified calibration up to 10 points	**On request[1]**
• CT verification and authority seal according to: PTB (Denmark and Germany)	**On request[1]**
• Customer-witnessed calibration Any of above calibration	**On request[1]**

[1] Ordering On request as dedicated information from the customer on the individual sensors is required. Please fill in the calibration form found on http://pi.khe.siemens.de/index.aspx?Nr=17461 and send together with the order. (Size dependent restriction on maximum flow rates may apply)

Operating instructions for SITRANS F M MAG 3100 P

Description	Article No.
• English	**A5E03005599**
• German	**A5E03086288**
• Spanish	**A5E03086291**
• French	**A5E03086290**

This device is shipped with a Quick Start guide and a CD containing further SITRANS F literature.

All literature is also available for free at:
http://www.siemens.com/flowdocumentation

MAG 5000/6000 transmitters and sensors are packed in separate boxes, the final assembly takes place during installation at the customer's place. MAG 6000 I/MAG 6000 I ATEX 2G D transmitters and sensors are delivered compact mounted from factory.
Communication module will be pre-mounted in the transmitter.

Accessories

Description	Article No.
Potting kit for terminal box of flow sensors for IP68/NEMA 6P (not for Ex sensors)	✱ **FDK:085U0220**

✱ We can offer shorter delivery times for configurations designated with the Quick Ship Symbol ✱. For details see page 9/5 in the appendix.

Please use online Product selector to get latest updates.

Product selector link:
www.pia-selector.automation.siemens.com

© Siemens AG 2013

Selection and Ordering data

MAG 3100 P Type E grounding and protection ring

1 pc. **AISI 316** grounding and protection rings **type E** for PTFE liners

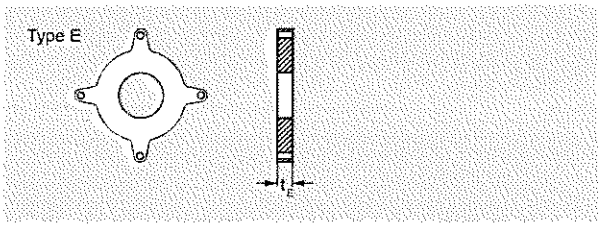

DN	PN 10 Article No.	PN 16 Article No.	PN 40 Article No.	ANSI[1]	Class 150 Article No.
DN 15			**FDK:083N8365**	½"	**FDK:083N8365**
DN 25			**FDK:083N8271**	1"	**FDK:083N8272**
DN 40			**FDK:083N8278**	1½"	**FDK:083N8279**
DN 50			**FDK:083N8282**	2"	**FDK:083N8283**
DN 65		**FDK:083N8285**		2½"	**FDK:083N8287**
DN 80		**FDK:083N8289**		3"	**FDK:083N8291**
DN 100		**FDK:083N8117**		4"	**FDK:083N8118**
DN 125		**FDK:083N8121**		5"	**FDK:083N8122**
DN 150		**FDK:083N8125**		6"	**FDK:083N8126**
DN 200	**FDK:083N8130**	**FDK:083N8130**		8"	**FDK:083N8370**
DN 250	**FDK:083N8136**	**FDK:083N8137**		10"	**FDK:083N8140**
DN 300	**FDK:083N8144**	**FDK:083N8145**		12"	**FDK:083N8148**

Protection of PTFE liner use 2 pcs.
Earthing of PTFE lined flowmeter use 1 pc.

Selection and Ordering data

MAG 3100 P type E grounding and protecting ring

1 pc. **Hastelloy C276** grounding and protection ring **type E** for PTFE liners

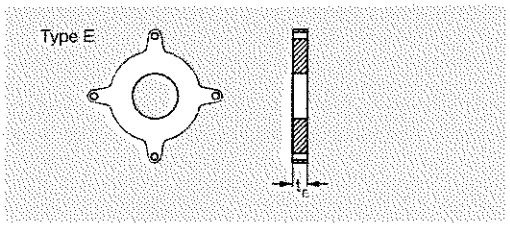

DN	PN 16 Article No.	PN 40 Article No.	Size	ANSI[1] Class 150 Article No.
DN 15		**FDK:083N8487**	½"	**FDK:083N8487**
DN 25		**FDK:083N8488**	1"	**FDK:083N8489**
DN 40		**FDK:083N8490**	1½"	**FDK:083N8491**
DN 50		**FDK:083N8492**	2"	**FDK:083N8493**
DN 65	**FDK:083N8495**		2½"	**FDK:083N8497**
DN 80	**FDK:083N8499**		3"	**FDK:083N8501**
DN 100	**FDK:083N8504**		4"	**FDK:083N8506**

[1] For dimensions of MAG 3100 P see table on page 3/90

© Siemens AG 2013

Selection and Ordering data

MAG 3100 P Grounding rings: Flat rings

1 pc. **AISI 316** grounding **flat ring** for all liners

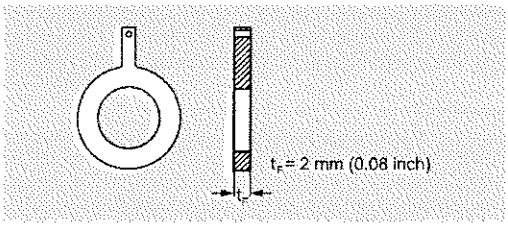

DN	PN 10 Article No.	PN 16 Article No.	PN 40 Article No.	Size	ANSI[1] Class 150 Article No.
DN 15			**A5E01191969**	½"	**A5E01191968**
DN 25			**A5E01150880**	1"	**A5E01150022**
DN 40			**A5E01191952**	1½"	**A5E01191961**
DN 50			**A5E01150918**	2"	**A5E01151121**
DN 65		**A5E01191940**		2½"	**A5E01191962**
DN 80		**A5E01152876**		3"	**A5E01152910**
DN 100		**A5E01158875**		4"	**A5E01159146**
DN 125		**A5E01191941**		5"	**A5E01191963**
DN 150		**A5E01191943**		6"	**A5E01191964**
DN 200	**A5E01191951**	**A5E01191944**		8"	**A5E01191965**
DN 250	**A5E01191950**	**A5E01191946**		10"	**A5E01191966**
DN 300	**A5E01191949**	**A5E01191947**		12"	**A5E01191967**

Selection and Ordering data

MAG 3100 P Grounding rings : Flat rings

1 pc. **Hastelloy** C276 grounding **flat ring**

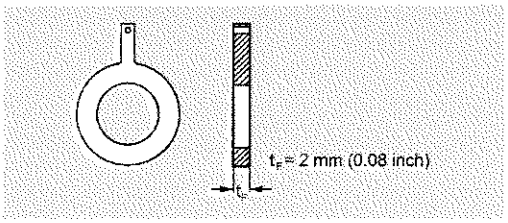

DN	PN 10 Article No.	PN 16 Article No.	PN 40 Article No.	Size	ANSI[1] Class 150 Article No.
DN 15			**A5E01191981**	½"	**A5E01191989**
DN 25			**A5E01150882**	1"	**A5E01150028**
DN 40			**A5E01191982**	1½"	**A5E01191990**
DN 50			**A5E01150922**	2"	**A5E01151124**
DN 65		**A5E01191971**		2½"	**A5E01191991**
DN 80		**A5E01152889**		3"	**A5E01152913**
DN 100		**A5E01158886**		4"	**A5E01159150**
DN 125		**A5E01191973**		5"	**A5E01191992**
DN 150		**A5E01191974**		6"	**A5E01191993**
DN 200	**A5E01191978**	**A5E01191975**		8"	**A5E01191994**
DN 250	**A5E01191979**	**A5E01191976**		10"	**A5E01191995**
DN 300	**A5E01191980**	**A5E01191977**		12"	**A5E01191996**

[1] For dimensions of MAG 3100 P see table on page 3/90

© Siemens AG 2013

Dimensional drawings

MAG 3100 P sensor with compact or remote transmitter

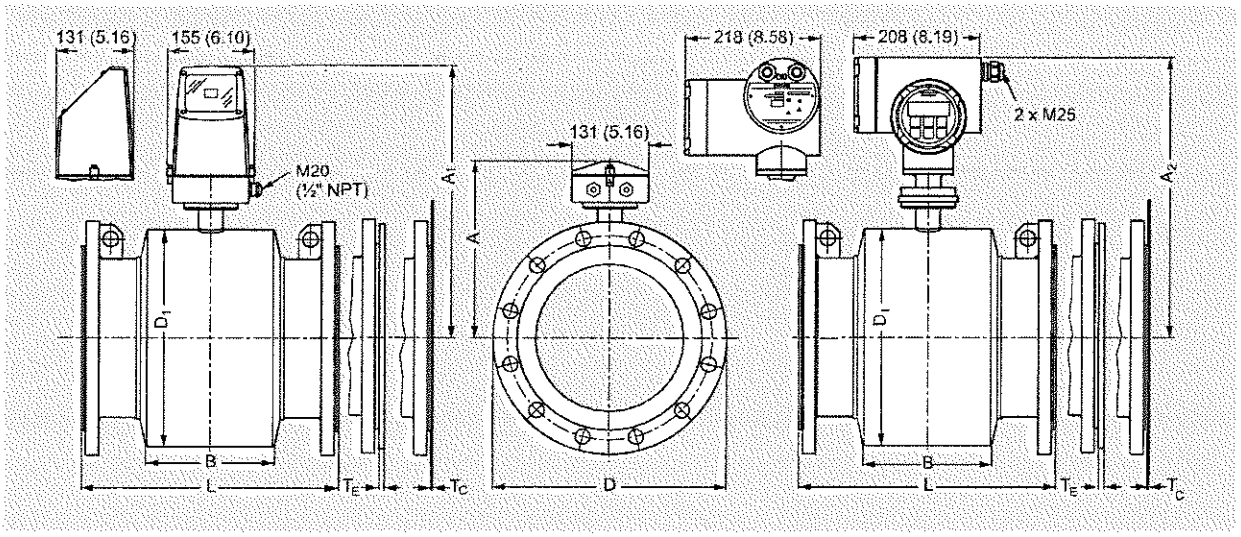

Dimensions in mm (inch)

Metric

DN	A[1]	A_1	A_2	B	D_1	L[2] EN 1092-1-201 PN 10	PN 16	PN 40	ANSI 16.5 Class 150	T_E[3]	T_F[3]	Wgt.[4]
[mm]	[mm]	[mm]	[mm]	[mm]	[mm]	[mm]	[mm]	[mm]	[mm]	[mm]	[mm]	[kg]
15	187	341	338	59	104	-	-	200	200	6	2	4
25	187	341	338	59	104	-	-	200	200	6	2	5
40	197	351	348	82	124	-	-	200	200	6	2	8
50	205	359	356	72	139	-	-	200	200	6	2	9
65	212	369	366	72	154	-	200/-	-	200	6	2	11
80	222	376	373	72	174	-	200/-	-	272[5]	6	2	12
100	242	396	393	85	214	-	250/-	-	250	6	2	16
125	255	409	406	85	239	-	250/-	-	250	6	2	19
150	276	430	427	85	282	-	300/-	-	300	6	2	27
200	304	458	455	137	338	350	350/-	-	350	8	2	40
250	332	486	483	157	393	450	450/-	-	450	8	2	60
300	357	511	508	157	444	500	500/-	-	500	8	2	80

1) 14.5 mm shorter with AISI terminal box (Ex and high temperature version)
2) When earthing flanges are used, the thickness of the earthing flange must be added to the built-in length
3) T_E = Type E grounding ring, T_F = Flat type grounding rings
4) Weights are approx. (for PN 16) without transmitter
5) Not according to ISO 13359

- not available

D = Outside diameter of flange, see flange tables

© Siemens AG 2013

MAG 3100 P sensor with compact or remote transmitter

Imperial

Size	A[1]	A_1	A_2	B	D_1	L[2] EN 1092-1-201 PN 10	PN 16	PN 40	ANSI 16.5 Class 150	T_C[3]	T_E[3]	T_F[3]	Wgt.[4]
[inch]	[inch]	[inch]	[inch]	[inch]	[inch]	[inch]	[inch]	[inch]	[inch]	[inch]	[inch]	[inch]	[lb]
½	7.36	13.4	13.34	2.32	4.09	-	-	7.87	7.87	-	0.24	0.08	9
1	7.36	13.4	13.34	2.32	4.09	-	-	7.87	7.87	0.05	0.24	0.08	11
1½	7.76	13.8	13.74	3.23	4.88	-	-	7.87	7.87	0.05	0.24	0.08	17
2	8.07	14.1	14.04	2.83	5.47	-	-	7.87	7.87	0.05	0.24	0.08	20
2½	8.35	14.4	14.34	2.83	6.06	-	7.87/-	-	7.87	0.05	0.24	0.08	24
3	8.74	14.8	14.74	2.83	6.85	-	7.87/-	-	10.71[5]	0.05	0.24	0.08	26
4	9.53	15.6	15.54	3.35	8.43	-	9.84/-	-	9.84	0.05	0.24	0.08	35
5	10.04	16.1	16.04	3.35	9.41	-	9.84/-	-	9.84	0.05	0.24	0.08	42
6	10.87	16.9	16.84	5.39	11.10	-	11.81/-	-	11.81	0.05	0.24	0.08	60
8	11.97	18.0	17.94	5.39	13.31	13.78	13.78/-	-	13.78	0.05	0.31	0.08	88
10	13.07	19.1	19.04	6.18	15.47	17.72	17.72/-	-	17.72	0.05	0.31	0.08	132
12	14.05	20.1	20.04	6.18	17.48	19.69	19.69/-	-	19.69	0.06	0.31	0.08	176

1) 0.571 inch shorter with AISI terminal box (Ex and high temperature version)
2) When earthing flanges are used, the thickness of the earthing flange must be added to the built-in length
3) T_C = Type C grounding ring, T_E = Type E grounding ring, T_F = Flat type grounding rings
4) Weights are for ANSI 150 without transmitter
5) Not according to ISO 13359

- not available

D = Outside diameter of flange, see flange tables

Chapter 2.2

Technical Literature - Pressure Measurement

© Siemens AG 2013

Overview

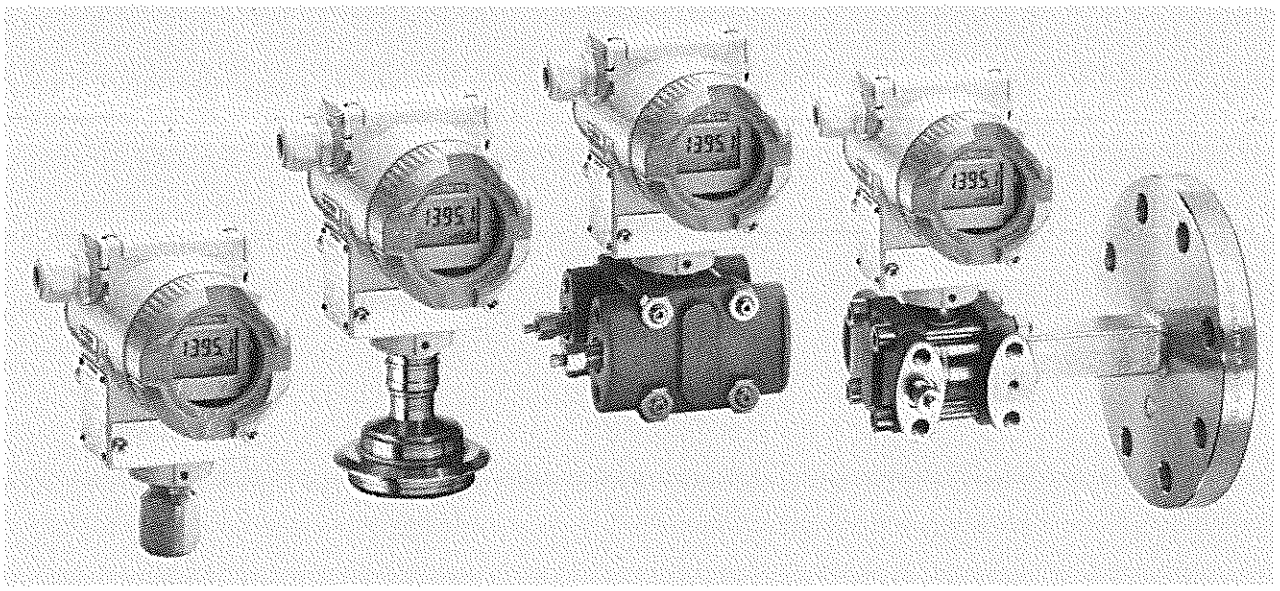

SITRANS P DS III pressure transmitters are digital pressure transmitters featuring extensive user-friendliness and high accuracy. The parameterization is performed using control keys or via HART, PROFIBUS-PA or FOUNDATION Fieldbus interface.

Extensive functionality enables the pressure transmitter to be precisely adapted to the plant's requirements. Operation is very simple in spite of the numerous setting options.

Transmitters with type of protection "Intrinsic safety" and "Explosion-proof" may be installed within potentially explosive atmospheres (zone 1) or in zone 0. The transmitters are provided with an EC type examination certificate and comply with the corresponding harmonized European standards (ATEX).

The transmitters can be equipped with various designs of remote seals for special applications such as the measurement of highly viscous substances.

Various versions of the DS III pressure transmitters are available for measuring:

- Gauge pressure
- Absolute pressure
- Differential pressure
- Level
- Volume level
- Mass level
- volume flow
- Mass flow

Benefits

- High quality and service life
- High reliability even under extreme chemical and mechanical loads
- For aggressive and non-aggressive gases, vapors and liquids
- Extensive diagnosis and simulation functions
- Separate replacement of measuring cell and electronics without recalibration
- Minimum conformity error
- Good long-term stability
- Wetted parts made of high-grade materials (e.g. stainless steel, Hastelloy, gold, Monel, tantalum)
- Infinitely adjustable span from 0.01 bar to 700 bar (0.15 psi to 10153 psi) for DS III with HART interface
- Nominal measuring range from 1 bar to 700 bar (14.5 psi to 10153 psi) for DS III with PROFIBUS PA and FOUNDATION Fieldbus interface
- High measuring accuracy
- Parameterization over control keys and HART or PROFIBUS PA, or FOUNDATION Fieldbus interface.

Application

The pressure transmitters of the DS III series, can be used in industrial areas with extreme chemical and mechanical loads. Electromagnetic compatibility in the range 10 kHz to 1 GHz makes the DS III pressure transmitters suitable for locations with high electromagnetic emissions.

Pressure transmitters with type of protection "Intrinsic safety" and "Explosion-proof" may be installed within potentially explosive atmospheres (zone 1) or in zone 0. The pressure transmitters are provided with an EC type examination certificate and comply with the corresponding harmonized European standards (ATEX).

Pressure transmitters with the type of protection "Intrinsic safety" for use in zone 0 may be operated with power supply units of category "ia" and "ib".

The transmitters can be equipped with various designs of remote seals for special applications such as the measurement of highly viscous substances.

The pressure transmitter can be programmed locally using the 3 control buttons or externally via HART or PROFIBUS PA or FOUNDATION Fieldbus interface.

© Siemens AG 2013

Pressure transmitter for gauge pressure

Measured variable: Gauge pressure of aggressive and non-aggressive gases, vapors and liquids.

Span (infinitely adjustable)
for DS III with HART: 0.01 bar to 700 bar (0.15 psi to 10153 psi)

Nominal measuring range
for DS III with PROFIBUS PA and FOUNDATION Fieldbus:
1 bar to 700 bar (14.5 psi to 10153 psi)

Pressure transmitters for absolute pressure

Measured variable: Absolute pressure of aggressive and non-aggressive gases, vapors and liquids.

Span (infinitely adjustable)
for DS III with HART: 8.3 mbar a ... 100 bar a (0.12 ... 1450 psia)

Nominal measuring range
for DS III with PROFIBUS PA and FOUNDATION Fieldbus:
250 mbar a ... 100 bar a (3.6 ... 1450 psia)

There are two series:

- Gauge pressure series
- Differential pressure series

Pressure transmitters for differential pressure and flow

Measured variables:

- Differential pressure
- Small positive or negative pressure
- Flow $q \sim \sqrt{\Delta p}$ (together with a primary differential pressure device (see Chap.ter "Flow Meters"))

Span (infinitely adjustable)
for DS III with HART: 1 mbar ... 30 bar (0.0145 ... 435 psi)

Nominal measuring range
for DS III with PROFIBUS PA and FOUNDATION Fieldbus:
20 mbar ... 30 bar (0.29 ... 435 psi)

Pressure transmitters for level

Measured variable: Level of aggressive and non-aggressive liquids in open and closed vessels.

Span (infinitely adjustable)
for DS III with HART: 25 mbar ... 5 bar (0.363 ... 72.5 psi)

Nominal measuring range
for DS III with PROFIBUS PA and FOUNDATION Fieldbus:
250 mbar ... 5 bar (3.63 ... 72.5 psi)

Nominal diameter of the mounting flange

- DN 80 or DN 100
- 3 inch or 4 inch

In the case of level measurements in open containers, the low-pressure connection of the measuring cell remains open (measurement "compared to atmospheric").

In the case of measurements in closed containers, the lower-pressure connection has to be connected to the container in order to compensate the static pressure.

The wetted parts are made from a variety of materials, depending on the degree of corrosion resistance required.

Design

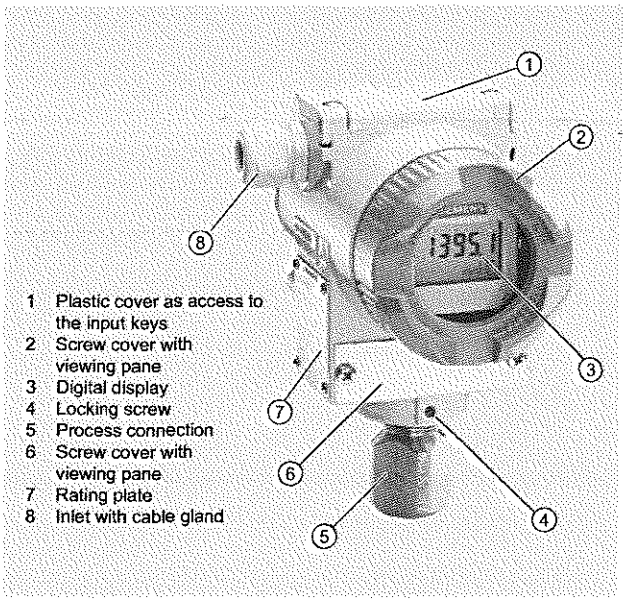

Front view

The transmitter consists of various components depending on the order. The possible versions are listed in the ordering information. The components described below are the same for all transmitters.

The rating plate (7, Figure "Front view") with the Article No. is located on the side of the housing. The specified number together with the ordering information provide details on the optional design details and on the possible measuring range (physical properties of built-in sensor element).

The approval label is located on the opposite side.

The housing is made of die-cast aluminium or stainless steel precision casting. A round cover (6) is screwed on at the front and rear of the housing. The front cover can be fitted with a viewing pane so that the measured values can be read directly on the display. The inlet (8) for the electrical connection is located either on the left or right side. The unused opening on the opposite side is sealed by a blanking plug. The protective earth connection is located on the rear of the housing.

The electrical connections for the power supply and screen are accessible by unscrewing the rear cover. The bottom part of the housing contains the measuring cell with process connection (5). The measuring cell is prevented from rotating by a locking screw (4). As the result of this modular design, the measuring cell and the electronics can be replaced separately from each other. The set parameter data are retained.

At the top of the housing is a plastic cover (1), which hides the input keys.

Example for an attached measuring point label

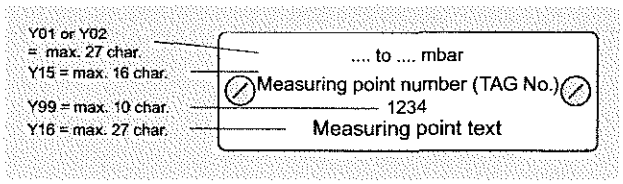

© Siemens AG 2013

Function

Operation of electronics with HART communication

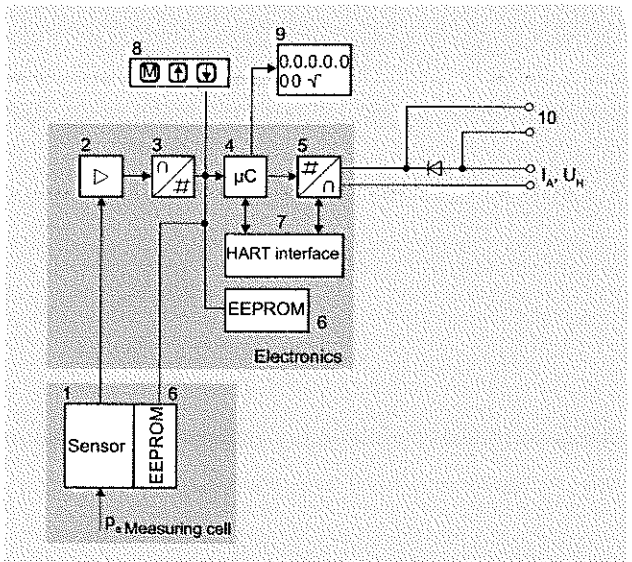

1 Measuring cell sensor
2 Instrument amplifier
3 Analog-to-digital converter
4 Microcontroller
5 Digital-to-analog converter
6 One non-volatile memory each in the measuring cell and electronics
7 HART interface
8 Three input keys (local operation)
9 Digital display
10 Diode circuit and connection for external ammeter
I_A Output current
U_H Power supply
P_e Input variable

Function diagram of electronics

The bridge output voltage created by the sensor (1, Figure "Function diagram of the electronics") is amplified by the measuring amplifier (2) and digitized in the analog-to-digital converter (3). The digital information is evaluated in a microcontroller, its linearity and temperature response corrected, and converted in a digital-to-analog converter (5) into an output current of 4 to 20 mA.

The diode circuit (10) protects against incorrect polarity.

The data specific to the measuring cell, the electronics data, and the parameter data are stored in the two non-volatile memories (6). The one memory is coupled to the measuring cell, the other to the electronics. As the result of this modular design, the electronics and the measuring cell can be replaced separately from each other.

Using the 3 input keys (8) you can parameterize the pressure transmitter directly at the measuring point. The input buttons can also be used to control the view of the results, the error messages and the operating modes on the display (9).

The HART modem (7) permits parameterization using a protocol according to the HART specification.

The pressure transmitters with spans ≤ 63 bar measure the input pressure compared to atmosphere, transmitters with spans ≥ 160 bar compared to vacuum.

Operation of electronics with PROFIBUS PA communication

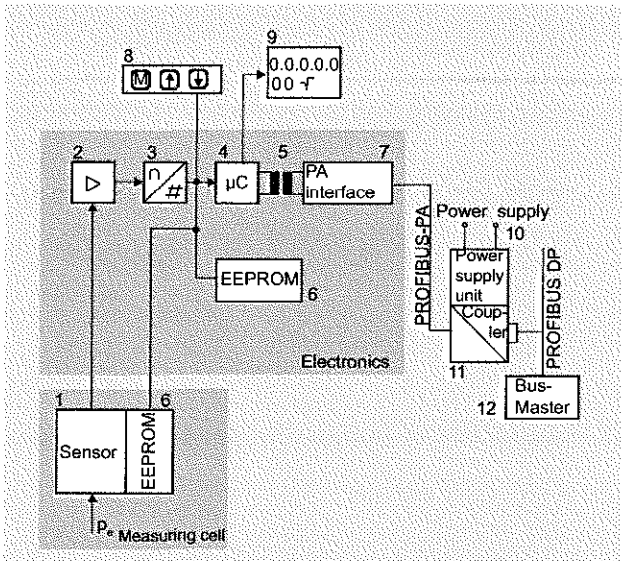

1 Measuring cell sensor
2 Instrument amplifier
3 Analog-to-digital converter
4 Microcontroller
5 Electrical isolation
6 One non-volatile memory each in the measuring cell and electronics
7 PROFIBUS-PA interface
8 Three input keys (local operation)
9 Digital display
10 Power supply
11 DP/PA coupler or link
12 Bus master
P_e Input variable

Function diagram of electronics

The bridge output voltage created by the sensor (1, Figure "Function diagram of the electronics") is amplified by the measuring amplifier (2) and digitized in the analog-to-digital converter (3). The digital information is evaluated in the microcontroller, its linearity and temperature response corrected, and provided on the PROFIBUS PA through an electrically isolated PA interface (7).

The data specific to the measuring cell, the electronics data, and the parameter data are stored in the two non-volatile memories (6). The one memory is coupled to the measuring cell, the other to the electronics. As the result of this modular design, the electronics and the measuring cell can be replaced separately from each other.

Using the three input buttons (8) you can parameterize the pressure transmitter directly at the measuring point. The input buttons can also be used to control the view of the results, the error messages and the operating modes on the display (9).

The results with status values and diagnostic values are transferred by cyclic data transmission on the PROFIBUS PA. Parameterization data and error messages are transferred by acyclic data transmission. Special software such as SIMATIC PDM is required for this.

© Siemens AG 2013

Operation of electronics with FOUNDATION Fieldbus communication

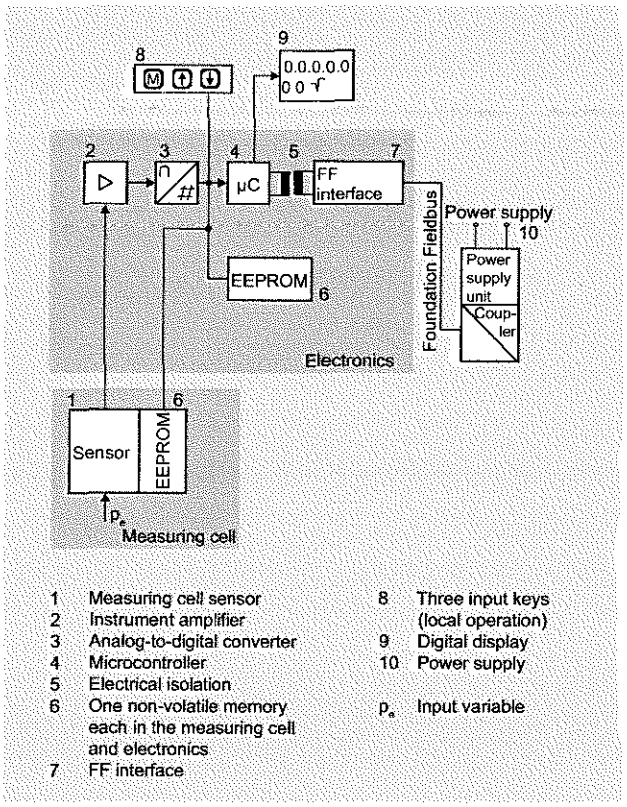

1	Measuring cell sensor	8	Three input keys (local operation)
2	Instrument amplifier	9	Digital display
3	Analog-to-digital converter	10	Power supply
4	Microcontroller		
5	Electrical isolation		
6	One non-volatile memory each in the measuring cell and electronics	p_e	Input variable
7	FF interface		

Function diagram of electronics

The bridge output voltage created by the sensor (1, Figure "Function diagram of electronics") is amplified by the measuring amplifier (2) and digitized in the analog-to-digital converter (3). The digital information is evaluated in the microcontroller, its linearity and temperature response corrected, and provided on the FOUNDATION Fieldbus through an electrically isolated FOUNDATION Fieldbus interface (7).

The data specific to the measuring cell, the electronics data, and the parameter data are stored in the two non-volatile memories (6). The one memory is coupled to the measuring cell, the other to the electronics. As the result of this modular design, the electronics and the measuring cell can be replaced separately from each other.

Using the three input buttons (8) you can parameterize the pressure transmitter directly at the measuring point. The input buttons can also be used to control the view of the results, the error messages and the operating modes on the display (9).

The results with status values and diagnostic values are transferred by cyclic data transmission on the FOUNDATION Fieldbus. Parameterization data and error messages are transferred by acyclic data transmission. Special software such as National Instruments Configurator is required for this.

Mode of operation of the measuring cells

Measuring cell for gauge pressure

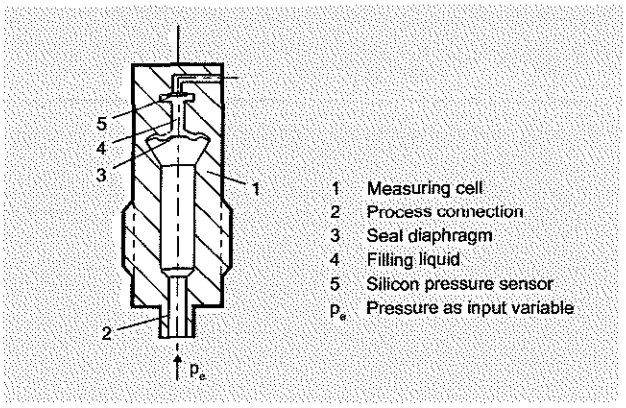

Measuring cell for gauge pressure, function diagram

The pressure p_e is applied through the process connection (2, Figure "Measuring cell for gauge pressure, function diagram) to the measuring cell (1). This pressure is subsequently transmitted further through the seal diaphragm (3) and the filling liquid (4) to the silicon pressure sensor (5) whose measuring diaphragm is then flexed. This changes the resistance of the four piezo-resistors fitted in the diaphragm in a bridge circuit. This change in resistance results in a bridge output voltage proportional to the absolute pressure.

Measuring cell for gauge pressure with front-flush diaphragm

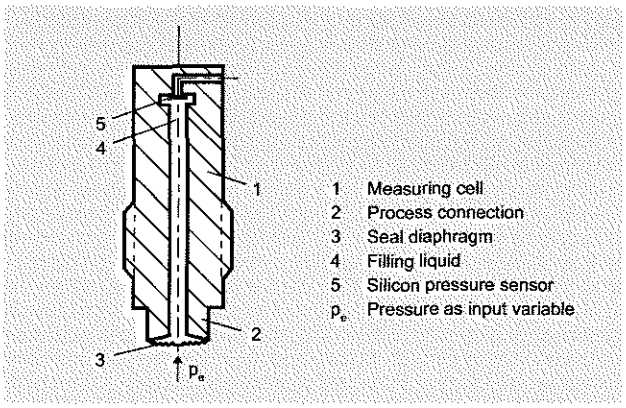

Measuring cell for gauge pressure, with front-flush diaphragm for paper industry, function diagram

The pressure $_p$e is applied through the process connection (2, Figure "Measuring cell for gauge pressure, with front-flush diaphragm for paper industry, function diagram") to the measuring cell (1). This pressure is subsequently transmitted further through the seal diaphragm (3) and the filling liquid (4) to the silicon pressure sensor (5) whose measuring diaphragm is then flexed. This changes the resistance of the four piezo-resistors fitted in the diaphragm in a bridge circuit. This change in resistance results in a bridge output voltage proportional to the absolute pressure.

© Siemens AG 2013

Measuring cell for absolute pressure from gauge pressure series

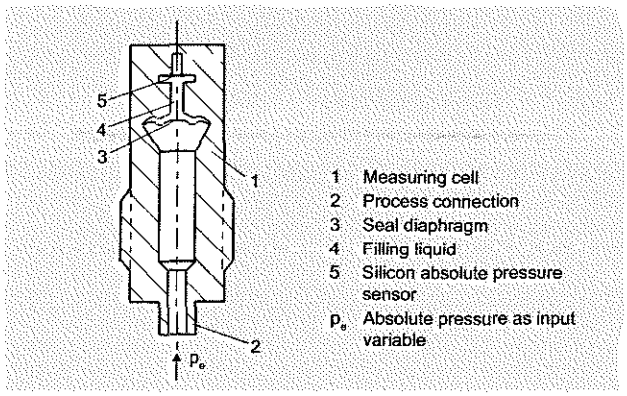

Measuring cell for absolute pressure from the pressure series, function diagram

The absolute pressure $_pe$ is transmitted through the seal diaphragm (3, Figure "Measuring cell for absolute pressure from pressure series, gauge pressure, function diagram ") and the filling liquid (4) to the silicon absolute pressure sensor (5) whose measuring diaphragm is then flexed. This changes the resistance of the four piezo-resistors fitted in the diaphragm in a bridge circuit. This change in resistance results in a bridge output voltage proportional to the absolute pressure.

Measuring cell for absolute pressure from differential pressure series

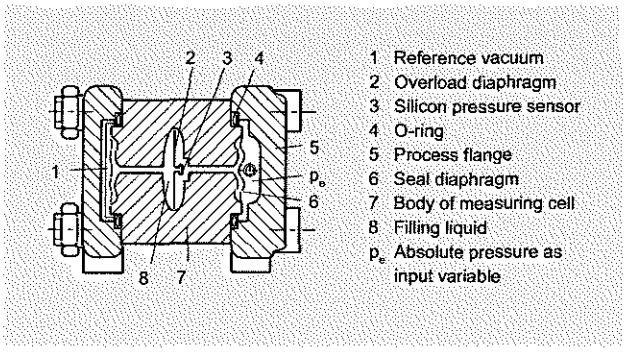

Measuring cell for absolute pressure from differential pressure series, function diagram

The input pressure p_e is transmitted through the seal diaphragm (6, Figure "Measuring cell for absolute pressure from differential pressure series, function diagram") and the filling liquid (8) to the silicon pressure sensor (3).

The difference in pressure between the input pressure p_e and the reference vacuum (1) on the low-pressure side of the measuring cell flexes the measuring diaphragm. This changes the resistance of the four piezo-resistors fitted in the diaphragm in a bridge circuit. This change in resistance results in a bridge output voltage proportional to the absolute pressure.

An overload diaphragm is installed to provide protection from overloads. If the measuring limits are exceeded, the overload diaphragm (2) is flexed until the seal diaphragm rests on the body of the measuring cell (7), thus protecting the silicon pressure sensor from overloads.

Measuring cell for differential pressure and flow

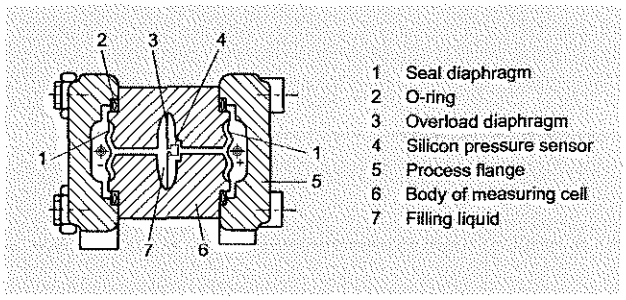

Measuring cell for differential pressure and flow, function diagram

The differential pressure is transmitted through the seal diaphragms (1, Figure "Measuring cell for differential pressure and flow, function diagram") and the filling liquid (7) to the silicon pressure sensor (4).

The measuring diaphragm is flexed by the applied differential pressure. This changes the resistance of the four piezo-resistors fitted in the diaphragm in a bridge circuit. This change in resistance results in a bridge output voltage proportional to the absolute pressure.

An overload diaphragm is installed to provide protection from overloads. If the measuring limits are exceeded, the overload diaphragm (3) is flexed until the seal diaphragm rests on the body of the measuring cell (6), thus protecting the silicon pressure sensor from overloads.

Measuring cell for level

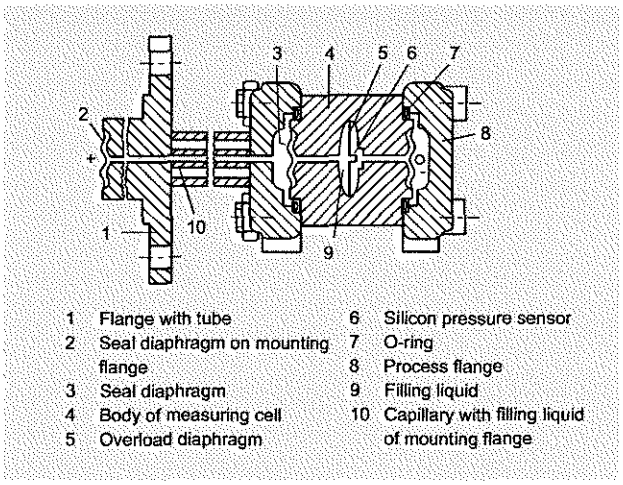

Measuring cell for level, function diagram

The input pressure (hydrostatic pressure) acts hydraulically on the measuring cell through the seal diaphragm on the mounting flange (2, Figure "Measuring cell for level, function diagram"). This differential pressure is subsequently transmitted further through the measuring cell (3) and the filling liquid (9) to the silicon pressure sensor (6) whose measuring diaphragm is then flexed.

This changes the resistance of the four piezo-resistors fitted in the diaphragm in a bridge circuit.

This change in resistance results in a bridge output voltage proportional to the differential pressure.

An overload diaphragm is installed to provide protection from overloads. If the measuring limits are exceeded, the overload diaphragm (5) is flexed until the seal diaphragm rests on the body of the measuring cell (4), thus protecting the silicon pressure sensor from overloads.

© Siemens AG 2013

Parameterization DS III

Depending on the version, there are a range of options for parameterizing the pressure transmitter and for setting or scanning the parameters.

Parameterization using the input buttons (local operation)

With the input buttons you can easily set the most important parameters without any additional equipment.

Parameterization using HART

Parameterization using HART is performed with a HART Communicator or a PC.

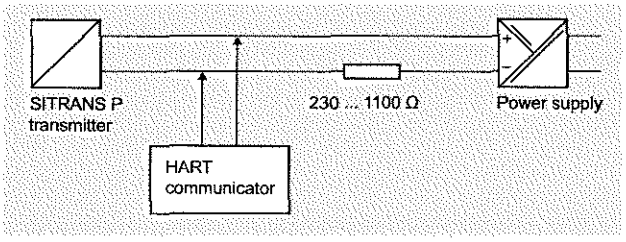

Communication between a HART Communicator and a pressure transmitter

When parameterizing with the HART Communicator, the connection is made directly to the 2-wire cable.

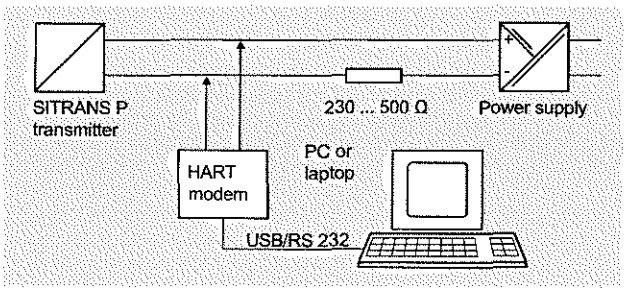

HART communication between a PC communicator and a pressure transmitter

When parameterizing with a PC, the connection is made through a HART modem.

The signals needed for communication in conformity with the HART 5.x or 6.x protocols are superimposed on the output current using the Frequency Shift Keying (FSK) method.

Adjustable parameters, DS III with HART

Parameters	Input keys (DS III HART)	HART communication
Start of scale	x	x
Full-scale value	x	x
Electrical damping	x	x
Start-of-scale value without application of a pressure ("Blind setting")	x	x
Full-scale value without application of a pressure ("Blind setting")	x	x
Zero adjustment	x	x
current transmitter	x	x
Fault current	x	x
Disabling of buttons, write protection	x	x[1]
Type of dimension and actual dimension	x	x
Characteristic (linear / square-rooted)	x[2]	x[2]
Input of characteristic		x
Freely-programmable LCD		x
Diagnostic functions		x

[1] Cancel apart from write protection
[2] Only differential pressure

Diagnostic functions for DS III with HART

- Zero correction display
- Event counter
- Limit transmitter
- Saturation alarm
- Slave pointer
- Simulation functions
- Maintenance timer

Available physical units of display for DS III with HART

Table style: Technical specifications 2

Physical variable	Physical dimensions
Pressure (setting can also be made in the factory)	Pa, MPa, kPa, bar, mbar, torr, atm, psi, g/cm², kg/cm², inH₂O, inH₂O (4 °C), mmH₂O, ftH₂O (20 °C), inHg, mmHg
Level (height data)	m, cm, mm, ft, in
Volume	m³, dm³, hl, yd³, ft³, in³, US gallon, Imp. gallon, bushel, barrel, barrel liquid
Mass	g, kg, t, lb, Ston, Lton, oz
volume flow	m³/d, m³/h, m³/s, l/min, l/s, ft³/d, ft³/min, ft³/s, US gallon/min, US gallon/s
Mass flow	t/d, t/h, t/min, kg/d, kg/h, kg/min, kg/s, g/d, g/h, g/min, g/s, lb/d, lb/h, lb/min, lb/s, LTon/d, LTon/h, STon/d, STon/h, STon/min
Temperature	K, °C, °F, °R
Miscellaneous	%, mA

Parameterization through PROFIBUS PA interface

Fully digital communication through PROFIBUS PA, profile 3.0, is particularly user-friendly. Through the PROFIBUS the DS III with PROFIBUS PA is connected to a process control system, e. g. SIMATIC PSC 7. Communication is possible even in a potentially explosive environment.

For parameterization through PROFIBUS you need suitable software, e.g. SIMATIC PDM (Process Device Manager).

Parameterization through FOUNDATION Fieldbus interface

Fully digital communication through FOUNDATION Fieldbus is particularly user-friendly. Through the FOUNDATION Fieldbus the DS III with FOUNDATION Fieldbus is connected to a process control system. Communication is possible even in a potentially explosive environment.

For parameterization through the FOUNDATION Fieldbus you need suitable software, e.g. National Instruments Configurator.

Adjustable parameters for DS III with PROFIBUS PA and FOUNDATION Fieldbus

Parameters	Input keys	PROFIBUS PA and FOUNDATION Fieldbus interface
Electrical damping	x	x
Zero adjustment (correction of position)	x	x
Buttons and/or function disabling	x	x
Source of measured-value display	x	x
Physical dimension of display	x	x
Position of decimal point	x	x
Bus address	x	x
Adjustment of characteristic	x	x
Input of characteristic		x
Freely-programmable LCD		x
Diagnostics functions		x

© Siemens AG 2013

Diagnostic functions for DS III with PROFIBUS PA and FOUNDATION Fieldbus

- Event counter
- Slave pointer
- Maintenance timer
- Simulation functions
- Display of zero correction
- Limit transmitter
- Saturation alarm

Physical dimensions available for the display

Physical variable	Physical dimensions
Pressure (setting can also be made in the factory)	MPa, kPa, Pa, bar, mbar, torr, atm, psi, g/cm^2, kg/cm^2, mmH_2O, mmH_2O (4 °C), inH_2O, in$H_2$0 (4 °C), ftH_2O (20 °C), mmHg, inHg
Level (height data)	m, cm, mm, ft, in, yd
Volume	m^3, dm^3, hl, yd^3, ft^3, in^3, US gallon, Imp. gallon, bushel, barrel, barrel liquid
volume flow	m^3/s, m^3/min, m^3/h, m^3/d, l/s, l/min, l/h, l/d, Ml/d, ft^3/s, ft^3/min, ft^3/h, ft^3/d, US gallon/s, US gallon/min, US gallon/h, US gallon/d, bbl/s, bbl/min, bbl/h, bbl/d
Mass flow	g/s, g/min, g/h, g/d, kg/s, kg/min, kg/h, kg/d, t/s, t/min, t/h, /t/d, lb/s, lb/min, lb/h, lb/d, STon/s, STon/min, STon/h, STon/d, LTon/s, LTon/min, LTon/h, LTon/d
Total mass flow	t, kg, g, lb, oz, LTon, STon
Temperature	K, °C, °F, °R
Miscellaneous	%

© Siemens AG 2013

Technical specifications

SITRANS P, DS III series for gauge pressure

	HART		PROFIBUS PA and FOUNDATION Fieldbus	
Input				
Measured variable	Gauge pressure			
Spans (infinitely adjustable) or nominal measuring range and max. permissible test pressure	Span (min. ... max.)	Max. perm. test pressure	Nominal measuring range	Max. perm. test pressure
	0.01 ... 1 bar (0.15 ... 14.5 psi)	6 bar (87 psi)	1 bar (14.5 psi)	6 bar (87 psi)
	0.04 ... 4 bar (0.58 ... 58 psi)	10 bar (145 psi)	4 bar (58 psi)	10 bar (145 psi)
	0.16 ... 16 bar (2.32 ... 232 psi)	32 bar (464 psi)	16 bar (232 psi)	32 bar (464 psi)
	0.6 ... 63 bar (9.14 ... 914 psi)	100 bar (1450 psi)	63 bar (914 psi)	100 bar (1450 psi)
	1.6 ... 160 bar (23.2 ... 2320 psi)	250 bar (3626 psi)	160 bar (2320 psi)	250 bar (3626 psi)
	4.0 ... 400 bar (58 ... 5802 psi)	600 bar (8700 psi)	400 bar (5802 psi)	600 bar (8700 psi)
	7.0 ... 700 bar (102 ... 10153 psi)	800 bar (11603 psi)	700 bar (10153 psi)	800 bar (11603 psi)
Lower measuring limit				
• Measuring cell with silicone oil filling	30 mbar a (0.44 psia)			
• Measuring cell with inert filling liquid	30 mbar a (0.44 psia)			
Upper measuring limit	100 % of max. span (for oxygen version and inert filling liquid: max. 120 bar (1740 psi))			
Output				
Output signal	4 ... 20 mA		Digital PROFIBUS PA and FOUNDATION Fieldbus signal	
• Lower limit (infinitely adjustable)	3.55 mA, factory preset to 3.84 mA		-	
• Upper limit (infinitely adjustable)	23 mA, factory preset to 20.5 mA or optionally set to 22.0 mA		-	
Load				
• Without HART	$R_B \leq (U_H - 10.5\ V)/0.023\ A$ in Ω; U_H: Power supply in V		-	
• With HART	$R_B = 230 ... 500\ \Omega$ (SIMATIC PDM) or $R_B = 230 ... 1100\ \Omega$ (HART Communicator)		-	
Physical bus	-		IEC 61158-2	
Protection against polarity reversal	Protected against short-circuit and polarity reversal. Each connection against the other with max. supply voltage.			
Electrical damping (step width 0.1 s)	Set to 2 s (0 ... 100 s)			
Measuring accuracy	Acc. to IEC 60770-1			
Reference conditions (All error data refer always refer to the set span)	Increasing characteristic, start-of-scale value 0 bar, stainless steel seal diaphragm, silicone oil filling, room temperature 25 °C (77 °F)) r: Span ratio (r = max. span / set span)			
Error in measurement at limit setting incl. hysteresis and reproducibility				
• Linear characteristic			≤ 0.075 %	
- r ≤ 10	≤ (0.0029 · r + 0.071) %			
- 10 < r ≤ 30	≤ (0.0045 · r + 0.071) %			
- 30 < r ≤ 100	≤ (0.005 · r + 0.05) %			
Long-term stability (temperature change ± 30 °C (± 54 °F))				
• 1 ... 4-bar measuring cell	≤ (0.25 · r) % per 5 years		≤ 0.25 % per 5 years	
• 16 ... 700-bar measuring cell	≤ (0.125 · r) % per 5 years		≤ 0.125 % per 5 years	
Influence of ambient temperature				
• at -10 ... +60 °C (14 ... 140 °F)	≤ (0.08 · r + 0.1) %[1] (at 700 bar: ≤ (0.1 · r + 0.2) %[2])		≤ 0.3 %	
• at -40 ... -10 °C and +60 ... +85 °C (-40 ... +14 °F and 140 ... 185 °F)	≤ (0.1 · r + 0.15) %/10 K		≤ 0.25 %/10 K	
Measured Value Resolution	-		$3 \cdot 10^{-5}$ of nominal measuring range	

© Siemens AG 2013

SITRANS P, DS III series for gauge pressure	HART	PROFIBUS PA and FOUNDATION Fieldbus
Rated conditions		
Degree of protection (to EN 60529)	IP65 (optional IP65/IP68)	
Temperature of medium		
• Measuring cell with silicone oil filling	-40 ... +100 °C (-40 ... +212 °F)	
• Measuring cell with inert filling liquid	-20 ... +100 °C (-4 ... +212 °F)	
• In conjunction with dust explosion protection	-20 ... +60 °C (-4 ... +140 °F)	
Ambient conditions		
• Ambient temperature		
- Transmitter (with 4-wire connection, observe temperature values of supplementary 4-wire electronics)	-40 ... +85 °C (-40 ... +185 °F)	
- Display readable	-30 ... +85 °C (-22 ... +185 °F)	
• Storage temperature	-50 ... +85 °C (-58 ... +185 °F)	
• Climatic class		
- Condensation	Relative humidity 0 ... 100 % Condensation permissible, suitable for use in the tropics	
• Electromagnetic Compatibility		
- Emitted interference and interference immunity	Acc. to IEC 61326 and NAMUR NE 21	
Design		
Weight (without options)	≈ 1.5 kg (≈ 3.3 lb)	
Enclosure material	Low-copper die-cast aluminum, GD-AlSi 12 or stainless steel precision casting, mat. no. 1.4408	
Wetted parts materials		
• Connection shank	Stainless steel, mat. no. 1.4404/316L or Hastelloy C4, mat. no. 2.4610	
• Oval flange	Stainless steel, mat. no. 1.4404/316L	
• Seal diaphragm	Stainless steel, mat. no. 1.4404/316L or Hastelloy C276, mat. no. 2.4819	
Measuring cell filling	Silicone oil or inert filling liquid (maximum value with oxygen measurement pressure 100 bar (1450 psi) at 60 °C (140 °F))	
Process connection	Connection shank G½B to DIN EN 837-1, female thread ½ -14 NPT or oval flange (PN 160 (MAWP 2320 psi)) to DIN 19213 with mounting thread M10 or $^{7}/_{16}$-20 UNF to EN 61518	
Material of mounting bracket		
Steel	Sheet-steel, Mat. No. 1.0330, chrome-plated	
Stainless steel	Sheet stainless steel, mat. no. 1.4301 (SS 304)	
Power supply U_H		Supplied through bus
Terminal voltage on transmitter	10.5 ... 45 V DC 10.5 ... 30 V DC in intrinsically-safe mode	-
Separate 24 V power supply necessary	-	No
Bus voltage		
• Not Ex	-	9 ... 32 V
• With intrinsically-safe operation	-	9 ... 24 V
Current consumption		
• Basic current (max.)	-	12.5 mA
• Start-up current ≤ basic current	-	Yes
• Max. current in event of fault	-	15.5 mA
Fault disconnection electronics (FDE) available	-	Yes

© Siemens AG 2013

SITRANS P, DS III series for gauge pressure	HART	PROFIBUS PA and FOUNDATION Fieldbus
Certificates and approvals		
Classification according to PED 97/23/EC	For gases of fluid group 1 and liquids of fluid group 1; complies with requirements of article 3, paragraph 3 (sound engineering practice)	
Explosion protection		
• Intrinsic safety "i"	PTB 13 ATEX 2007 X	
- Marking	Ex II 1/2 G Ex ia/ib IIC T4/T5/T6 Ga/Gb	
- Permissible ambient temperature	-40 ... +85 °C (-40 ... +185 °F) temperature class T4; -40 ... +70 °C (-40 ... +158 °F) temperature class T5; -40 ... +60 °C (-40 ... +140 °F) temperature class T6	
- Connection	To certified intrinsically-safe circuits with peak values: U_i = 30 V, I_i = 100 mA, P_i = 750 mW; R_i = 300 Ω	FISCO supply unit: U_o = 17.5 V, I_o = 380 mA, P_o = 5.32 W Linear barrier: U_o = 24 V, I_o = 174 mA, P_o = 1 W
- Effective internal inductance/capacitance	L_i = 0.4 mH, C_i = 6 nF	L_i = 7 µH, C_i = 1.1 nF
• Explosion-proof "d"	PTB 99 ATEX 1160	
- Marking	Ex II 1/2 G Ex d IIC T4/T6 Gb	
- Permissible ambient temperature	-40 ... +85 °C (-40 ... +185 °F) temperature class T4; -40 ... +60 °C (-40 ... +140 °F) temperature class T6	
- Connection	To circuits with values: U_H = 10.5 ... 45 V DC	To circuits with values: U_H = 9 ... 32 V DC
• Dust explosion protection for zone 20	PTB 01 ATEX 2055	
- Marking	Ex II 1 D IP65 T 120 °C Ex II 1/2 D IP65 T 120 °C	
- Permissible ambient temperature	-40 ... +85 °C (-40 ... +185 °F)	
- Max. surface temperature	120 °C (248 °F)	
- Connection	To certified intrinsically-safe circuits with peak values: U_i = 30 V, I_i = 100 mA, P_i = 750 mW, R_i = 300 Ω	FISCO supply unit: U_o = 17.5 V, I_o = 380 mA, P_o = 5.32 W Linear barrier: U_o = 24 V, I_o = 250 mA, P_o = 1 W
- Effective internal inductance/capacitance	L_i = 0.4 mH, C_i = 6 nF	L_i = 7 µH, C_i = 1.1 nF
• Dust explosion protection for zone 21/22	PTB 01 ATEX 2055	
- Marking	Ex II 2 D IP65 T 120 °C	
- Connection	To circuits with values: U_H = 10.5 ... 45 V DC; P_{max} = 1.2 W	To circuits with values: U_H = 9 ... 32 V DC; P_{max} = 1 W
• Type of protection "n" (zone 2)	PTB 13 ATEX 2007 X	
- Marking	Ex II 2/3 G Ex nA II T4/T5/T6 Gc Ex II 2/3 G Ex ic IIC T4/T5/T6 Gc	
- Connection (Ex nA)	U_m = 45 V	U_m = 32 V
- Connections (Ex ic)	To circuits with values: U_i = 45 V	FISCO supply unit ic: U_o = 17.5 V, I_o = 570 mA Linear barrier: U_o = 32 V, I_o = 132 mA, P_o = 1 W
- Effective internal inductance/capacitance	L_i = 0.4 mH, C_i = 6 nF	L_i = 7 µH, C_i = 1,1 nF
• Explosion protection acc. to FM	Certificate of Compliance 3008490	
- Identification (XP/DIP) or (IS); (NI)	CL I, DIV 1, GP ABCD T4...T6; CL II, DIV 1, GP EFG; CL III; CL I, ZN 0/1 AEx ia IIC T4...T6; CL I, DIV 2, GP ABCD T4...T6; CL II, DIV 2, GP FG; CL III	
• Explosion protection to CSA	Certificate of Compliance 1153651	
- Identification (XP/DIP) or (IS)	CL I, DIV 1, GP ABCD T4...T6; CL II, DIV 1, GP EFG; CL III; Ex ia IIC T4...T6; CL I, DIV 2, GP ABCD T4...T6; CL II, DIV 2, GP FG; CL III	

1) Conversion of temperature error per 28 °C. Valid for temperature range -3 ... +53 °C < (0.064 . r + 0.08) % / 28 °C (50 °F).

2) Conversion of temperature error per 28 °C. Valid for temperature range -3 ... +53 °C < (0.08 . r + 0.16) % / 28 °C (50 °F).

© Siemens AG 2013

HART communication	
HART	230 ... 1100 Ω
Protocol	HART Version 5.x
Software for computer	SIMATIC PDM
PROFIBUS PA communication	
Simultaneous communication with master class 2 (max.)	4
The address can be set using	Configuration tool or local operation (standard setting address 126)
Cyclic data usage	
• Output byte	5 (one measured value) or 10 (two measured values)
• Input byte	0, 1, or 2 (register operating mode and reset function for metering)
Internal preprocessing	
Device profile	PROFIBUS PA Profile for Process Control Devices Version 3.0, Class B
Function blocks	2
• Analog input	
- Adaptation to customer-specific process variables	Yes, linearly rising or falling characteristic
- Electrical damping, adjustable	0 ... 100 s
- Simulation function	Input /Output
- Failure mode	parameterizable (last good value, substitute value, incorrect value)
- Limit monitoring	Yes, one upper and lower warning limit and one alarm limit respectively
• Register (totalizer)	Can be reset, preset, optional direction of counting, simulation function of register output
- Failure mode	parameterizable (summation with last good value, continuous summation, summation with incorrect value)
- Limit monitoring	One upper and lower warning limit and one alarm limit respectively
• Physical block	1
Transducer blocks	2
• Pressure transducer block	
- Can be calibrated by applying two pressures	Yes
- Monitoring of sensor limits	Yes
- Specification of a container characteristic with	Max. 30 nodes
- Square-rooted characteristic for flow measurement	Yes
- Gradual volume suppression and implementation point of square-root extraction	Parameterizable
- Simulation function for measured pressure value and sensor temperature	Constant value or over parameterizable ramp function

FOUNDATION Fieldbus communication	
Function blocks	3 function blocks analog input, 1 function block PID
• Analog input	
- Adaptation to customer-specific process variables	Yes, linearly rising or falling characteristic
- Electrical damping, adjustable	0 ... 100 s
- Simulation function	Output/input (can be locked within the device with a bridge)
- Failure mode	parameterizable (last good value, substitute value, incorrect value)
- Limit monitoring	Yes, one upper and lower warning limit and one alarm limit respectively
- Square-rooted characteristic for flow measurement	Yes
• PID	Standard FOUNDATION Fieldbus function block
• Physical block	1 resource block
Transducer blocks	1 transducer block Pressure with calibration, 1 transducer block LCD
• Pressure transducer block	
- Can be calibrated by applying two pressures	Yes
- Monitoring of sensor limits	Yes
- Simulation function: Measured pressure value, sensor temperature and electronics temperature	Constant value or over parameterizable ramp function

© Siemens AG 2013

Selection and Ordering data			Article No.
Pressure transmitter for gauge pressure, SITRANS P DS III with HART			**7MF4033-** ■■■■■-■■■■
Measuring cell filling	**Measuring cell cleaning**		
Silicone oil	normal	▶ ✹	1
Inert liquid[1]	grease-free to cleanliness level 2		3
Measuring span (min. ... max.)			
0.01 ... 1 bar	(0.15 ... 14.5 psi)	▶ ✹	B
0.04 ... 4 bar	(0.58 ... 58 psi)	▶ ✹	C
0.16 ... 16 bar	(2.32 ... 232 psi)	▶ ✹	D
0.63 ... 63 bar	(9.14 ... 914 psi)	▶ ✹	E
1.6 ... 160 bar	(23.2 ... 2320 psi)	▶ ✹	F
4.0 ... 400 bar	(58.0 ... 5802 psi)	▶ ✹	G
7.0 ... 700 bar	(102.0 ...10153 psi)	▶	J
Wetted parts materials			
Seal diaphragm	Process connection		
Stainless steel	Stainless steel	▶ ✹	A
Hastelloy	Stainless steel		B
Hastelloy	Hastelloy		C
Version as diaphragm seal [2) 3) 4) 5)]			Y
Process connection			
• Connection shank G½B to EN 837-1		▶ ✹	0
• Female thread ½-14 NPT		✹	1
• Stainless steel oval flange with process connection (Oval flange has no female thread)			
- Mounting thread $^{7}/_{16}$-20 UNF to IEC 61518			2
- Mounting thread M10 to DIN 19213			3
- Mounting thread M12 to DIN 19213			4
• Male thread M20 x 1.5			5
• Male thread ½ -14 NPT			6
Non-wetted parts materials			
• Housing made of die-cast aluminium		▶ ✹	0
• Housing stainless steel precision casting[6)]			3
Version			
• Standard versions		✹	1
• International version, English label inscriptions, documentation in 5 languages on CD (no Order code selectable)		▶ ✹	2
Explosion protection			
• None		✹	A
• With ATEX, Type of protection:			
- "Intrinsic safety (Ex ia)"		✹	B
- "Explosion-proof (Ex d)"[7)]		✹	D
- "Intrinsic safety and flameproof enclosure" (Ex ia + Ex d)"[8)]		✹	P
- "Ex nA/ic (Zone 2)"[9)]		✹	E
- "Intrinsic safety, explosion-proof enclosure and dust explosion protection (Ex ia + Ex d + Zone 1D/2D)"[8)]		▶ ✹	R
• FM + CSA intrinsic safe (is)			F
• FM + CSA (is + ep) + Ex ia + Ex d (ATEX)			S
• With FM + CSA, Type of protection:			
- "Intrinsic Safe und Explosion Proof (is + xp)"[7)]		✹	NC
Electrical connection / cable entry			
• Screwed gland Pg 13.5 (adapter)[10)]			A
• Screwed gland M20 x1 .5		▶ ✹	B
• Screwed gland ½-14 NPT		✹	C
• Han 7D plug (plastic housing) incl. mating connector[10)]			D
• M12 connectors (stainless steel)[10)11)]			F

Selection and Ordering data		Article No.
Pressure transmitter for gauge pressure, SITRANS P DS III with HART		**7MF4033-** ■■■■■-■■■■
Display		
• Without display	✹	0
• Without visible display (display concealed, setting: mA)	▶ ✹	1
• With visible display, setting: mA	✹	6
• with customer-specific display (setting as specified, Order code "Y21" or "Y22" required)	✹	7

▶ Available ex stock

✹ We can offer shorter delivery times for configurations designated with the Quick Ship Symbol ✹. For details see page 9/5 in the appendix.

Power supply units see Chap. 7 "Supplementary Components".

Included in delivery of the device:
- Brief instructions (Leporello)
- CD-ROM with detailed documentation

1) For oxygen application, add Order code E10.

2) When the manufacture's certificate (calibration certificate) has to be ordered for transmitters with diaphragm seals according to IEC 60770-2, it is recommended only to order this certificate exclusively with the diaphragm seals. The measuring accuracy of the total combination is certified here.

3) If the acceptance test certificate 3.1.is ordered for the transmitter with mounted diaphragm seals this certificate must also be ordered with the respective remote seals.

4) The diaphragm seal is to be specified with a separate order number and must be included with the transmitter order number, for example 7MF403.-..Y..-.... and 7MF4900-1...-.B

5) The standard measuring cell filling of configurations with remote seals (Y) is silicone oil.

6) Not in conjunction with Electrical connection "Screwed gland Pg 13.5" and "Han7D plug".

7) Without cable gland, with blanking plug

8) With enclosed cable gland Ex ia and blanking plug

9) Configurations with HAN and M12 connectors are only available in Ex ic.

10) Not in conjunction with types of protection "Explosion-proof" and "Ex nA", "Intrinsic safety" and "Explosion-proof".

11) M12 delivered without cable socket

© Siemens AG 2013

Selection and Ordering data		Article No.
Pressure transmitter for gauge pressure		
SITRANS P DS III with PROFIBUS PA (PA)		**7MF4034-**
SITRANS P DS III with FOUNDATION Fieldbus (FF)		**7MF4035-**
		■■■■■-■■■■
Measuring cell filling	**Measuring cell cleaning**	
Silicone oil	normal	1
Inert liquid[1]	grease-free to cleanliness level 2	3
Nominal measuring range		
1 bar	(14.5 psi)	B
4 bar	(58 psi)	C
16 bar	(232 psi)	D
63 bar	(914 psi)	E
160 bar	(2320 psi)	F
400 bar	(5802 psi)	G
700 bar	(10153 psi)	J
Wetted parts materials		
Seal diaphragm	Process connection	
Stainless steel	Stainless steel	A
Hastelloy	Stainless steel	B
Hastelloy	Hastelloy	C
Version as diaphragm seal [2) 3) 4) 5)]		Y
Process connection		
• Connection shank G½B to EN 837-1		0
• Female thread ½-14 NPT		1
• Stainless steel oval flange with process connection (Oval flange has no female thread) [6)]		
- Mounting thread $^{7}/_{16}$-20 UNF to IEC 61518		2
- Mounting thread M10 to DIN 19213		3
- Mounting thread M12 to DIN 19213		4
• Male thread M20 x 1.5		5
• Male thread ½ -14 NPT		6
Non-wetted parts materials		
• Housing made of die-cast aluminium		0
• Housing stainless steel precision casting		3
Version		
• Standard versions		1
• International version, English label inscriptions, documentation in 5 languages on CD (no Order code selectable)		2
Explosion protection		
• None		A
• With ATEX, Type of protection:		
- "Intrinsic safety (Ex ia)"		B
- "Explosion-proof (Ex d)"[7)]		D
- "Intrinsic safety and flameproof enclosure" (Ex ia + Ex d)"[8)]		P
- "Ex nA/ic (Zone 2)"[9)]		E
- "Intrinsic safety, explosion-proof enclosure and dust explosion protection (Ex ia + Ex d + Zone 1D/2D)"[8)] (not for DS III FF)		R
• FM + CSA intrinsic safe (is)		F
• FM + CSA (is + ep) + Ex ia + Ex d (ATEX)		S
• With FM + CSA, Type of protection:		
- "Intrinsic Safe und Explosion Proof (is + xp)"[7)]		NC
Electrical connection/cable entry		
• Screwed gland M20 x 1.5		B
• Screwed gland ½-14 NPT		C
• M12 connectors (stainless steel)[10) 11) 12)]		F

Selection and Ordering data	Article No.
Pressure transmitter for gauge pressure	
SITRANS P DS III with PROFIBUS PA (PA)	**7MF4034-**
SITRANS P DS III with FOUNDATION Fieldbus (FF)	**7MF4035-**
	■■■■■-■■■■
Display	
• Without display	0
• Without visible display (display concealed, setting: bar)	1
• With visible display	6
• with customer-specific display (setting as specified, Order code "Y21" required)	7

Included in delivery of the device:
- Brief instructions (Leporello)
- CD-ROM with detailed documentation

1) For oxygen application, add Order code E10.

2) When the manufacture's certificate (calibration certificate) has to be ordered for transmitters with diaphragm seals according to IEC 60770-2, it is recommended only to order this certificate exclusively with the diaphragm seals. The measuring accuracy of the total combination is certified here.

3) If the acceptance test certificate 3.1.is ordered for the transmitter with mounted diaphragm seals this certificate must also be ordered with the respective remote seals.

4) The diaphragm seal is to be specified with a separate order number and must be included with the transmitter order number, for example 7MF403.-..Y..-.... and 7MF4900-1...-.B

5) The standard measuring cell filling of configurations with remote seals (Y) is silicone oil.

6) M10 fastening thread: Max. span 160 bar (2320 psi)
7/16-20 UNF and M12 fastening thread: Max. span 400 bar (5802 psi)

7) Without cable gland, with blanking plug.

8) With enclosed cable gland Ex ia and blanking plug.

9) Configurations with HAN and M12 connectors are only available in Ex ic.

10) M12 delivered without cable socket

11) Not available with protection type "Ex d" bestellbar (Options D, P, N and R)

12) Not with protection types "Explosion-proof" and protection type „Ex nA", „Intrinsic safe" and „Explosion proof".

© Siemens AG 2013

Selection and Ordering data	Order code	HART	PA	FF
Further designs Add "-Z" to Article No. and specify Order code.				
Pressure transmitter with mounting bracket (1x fixing angle, 2 x nut, 2 x U-washer or 1 x bracket, 2 x nut, 2 x U-washer) made of:				
• Steel	✱ A01	✓	✓	✓
• Stainless steel	✱ A02	✓	✓	✓
Plug				
• Han 7D (metal, gray)	A30	✓		
• Han 8U (instead of Han 7D)	A31	✓		
• Angled	A32	✓		
• Han 8D (metal, gray)	A33	✓		
Cable sockets for M12 connectors (stainless steel)	A50	✓	✓	✓
Rating plate inscription (instead of German)				
• English	✱ B11	✓	✓	✓
• French	✱ B12	✓	✓	✓
• Spanish	✱ B13	✓	✓	✓
• Italian	✱ B14	✓	✓	✓
English rating plate Pressure units in inH_2O and/or psi	✱ B21	✓	✓	✓
Quality inspection certificate (Five-step factory calibration) to IEC 60770-2[1]	✱ C11	✓	✓	✓
Inspection certificate[2] Acc. to EN 10204-3.1	✱ C12	✓	✓	✓
Factory certificate Acc. to EN 10204-2.2	✱ C14	✓	✓	✓
Functional safety (SIL2) Devices suitable for use according to IEC 61508 and IEC 61511. Includes SIL conformity declaration	✱ C20	✓		
Functional safety (PROFIsafe) Certificate and PROFIsafe protocol	C21[3]		✓	
Functional safety (SIL2/3) Devices suitable for use according to IEC 61508 and IEC 61511. Includes SIL conformity declaration	✱ C23	✓		
Device passport Russia (For price request please contact the technical support www.siemens.com/automation/support-request)	C99	✓	✓	✓
Setting of upper limit of output signal to 22.0 mA	D05	✓		
Manufacturer's declaration acc. to NACE (MR 0103-2012 and MR 0175-2009)	D07	✓	✓	✓
Degree of protection IP65/IP68 (only for M20x1.5 and ½-14 NPT)	D12	✓	✓	✓
Supplied with oval flange (1 item), PTFE packing and screws in thread of oval flange	D37	✓	✓	✓
Use in or on zone 1D/2D (only together with type of protection "Intrinsic safety" (transmitter 7MF4...-.....-.B.. Ex ia)")	E01	✓	✓	✓
Oxygen application (In the case of oxygen measurement and inert liquid max. 100 bar (1450 psi) at 60°C (140 °F))	E10	✓	✓	✓
Export approval Korea	E11	✓	✓	✓
CRN approval Canada (Canadian Registration Number)	E22	✓	✓	✓
Dual seal	E24	✓	✓	✓
Explosion-proof "Intrinsic safety" (Ex ia) to INMETRO (Brazil) (only for transmitter 7MF4...-.....-.B..)	E25[4]	✓	✓	✓

Selection and Ordering data	Order code	HART	PA	FF
Further designs Add "-Z" to Article No. and specify Order code.				
"Flameproof" explosion protection according to INMETRO (Brazil) (only for transmitter 7MF4...-.....-.D..)	E26[4]	✓	✓	✓
Explosion-proof "Intrinsic safety" (Ex ia + Ex d) to INMETRO (Brazil) (only for transmitter 7MF4...-.....-.P..)	E28[4]	✓	✓	
Ex Approval IEC Ex (Ex ia) (only for transmitter 7MF4...-.....-.B..)	E45[4]	✓	✓	✓
Ex Approval IEC Ex (Ex id) (only for transmitter 7MF4...-.....-.D..)	E46[4]	✓	✓	✓
Explosion-proof "Intrinsic safety" to NEPSI (China)	E55[4]	✓	✓	✓
Explosion protection "Explosion-proof" to NEPSI (China) (only for transmitter 7MF4...-.....-.D..)	E56[4]	✓	✓	✓
Ex protection "Zone 2" to NEPSI (China) (only for transmitter 7MF4...-.....-.E..)	E57[4]	✓	✓	✓
"Intrinsic safety" and "Explosion-proof" explosion protection acc. to Kosha (Korea) (only for transmitter 7MF4...-.....-.[B, D].-Z + E11)	E70[4]	✓	✓	✓
Two coats of lacquer on casing and cover (PU on epoxy)	G10	✓	✓	✓
Transient protector 6 kV (lightning protection)	J01	✓	✓	✓

✱ We can offer shorter delivery times for configurations designated with the Quick Ship Symbol ✱. For details see page 9/5 in the appendix.

1) When the manufacture's certificate (calibration certificate) has to be ordered for transmitters with diaphragm seals according to IEC 60770-2, it is recommended only to order this certificate exclusively with the diaphragm seals. The measuring accuracy of the total combination is certified here.

2) If the acceptance test certificate 3.1 is ordered for the transmitter with mounted diaphragm seals this certificate must also be ordered with the respective remote seals.

3) Profisafe transmitters can only be operated with the S7 F Systems V6.1 configuration software in combination with S7-400H

4) Option does not include ATEX approval, but instead includes only the country-specific approval.

© Siemens AG 2013

1

Selection and Ordering data		Order code	HART	PA	FF
Additional data Please add **"-Z"** to Article No. and specify Order code(s) and plain text.					
Measuring range to be set Specify in plain text (max. 5 characters): Y01: ... up to ... mbar, bar, kPa, MPa, psi	✱	**Y01**	✓	✓[1]	
Stainless steel tag plate and entry in device variable (measuring point description) Max. 16 characters, specify in plain text: Y15:	✱	**Y15**	✓	✓	✓
Measuring point text (entry in device variable) Max. 27 characters, specify in plain text: Y16:	✱	**Y16**	✓	✓	✓
Entry of HART address (TAG) Max. 8 characters, specify in plain text: Y17:	✱	**Y17**	✓		
Setting of pressure indication in pressure units Specify in plain text (standard setting: bar): Y21: mbar, bar, kPa, MPa, psi, ... Note: The following pressure units can be selected: bar, mbar, mm H_2O*), inH_2O*), ftH_2O*), mmHG, inHG, psi, Pa, kPa, MPa, g/cm^2, kg/cm^2, Torr, ATM or % *) ref. temperature 20 °C	✱	**Y21**	✓	✓	✓
Setting of pressure indication in non-pressure units[2] Specify in plain text: Y22: ..... up to ..... l/min, m^3/h, m, USgpm, ... (specification of measuring range in pressure units "Y01" is essential, unit with max. 5 characters)	✱	**Y22 + Y01**	✓		
Preset bus address possible between 1 and 126 Specify in plain text: Y25:		**Y25**		✓	✓
Damping adjustment in seconds (0 ... 100 s)		**Y30**	✓	✓	✓

✱ We can offer shorter delivery times for configurations designated with the Quick Ship Symbol ✱. For details see page 9/5 in the appendix.

Only Y01, Y15, Y16, Y17, Y21, Y22, Y25 and D05 can be factory preset

✓ = available

Ordering example

Item line:	7MF4033-1EA00-1AA7-Z
B line:	A01 + Y01 + Y21
C line:	Y01: 10 ... 20 bar (145 ... 290 psi)
C line:	Y21: bar (psi)

[1] Measuring accuracies for PROFIBUS PA transmitters with Option Y01 are calculated in the same way as for HART devices.
[2] Preset values can only be changed over SIMATIC PDM.

© Siemens AG 2013

Dimensional drawings

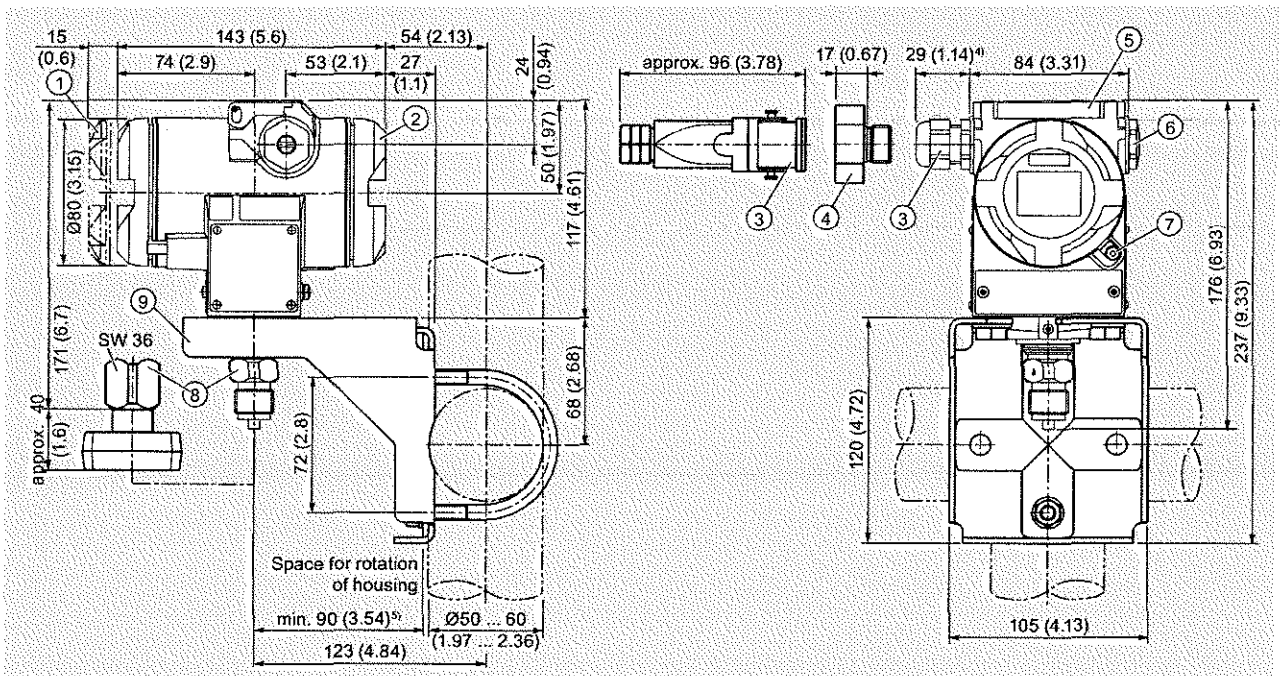

1. Electronic side, digital display (longer overall length for cover with window)[1]
2. Terminal side[1]
3. Electrical connection: Screwed gland Pg 13,5 (adapter)(Adapter)[2] [3], Screwed gland M20 x 1,5 or Screwed gland ½-14 NPT or Han 7D/Han 8D[2] [3] plug
4. Harting adapter
5. Protective cover over keys
6. Blanking plug
7. Screw cover - safety bracket (only for type of protection "Explosion-proof enclosure", not shown in the drawing)
8. Process connection: Connection shank G½B or Oval flange
9. Mounting bracket (option)

1) Allow approx. 20 mm (0.79 inch) thread length to permit unscrewing
2) Not with type of protection "Explosion-proof enclosure"
3) Not with type of protection "FM + CSA" [IS + XP]"
4) For Pg 13,5 with adapter approx. 45 mm (1.77 inch)
5) Minimum distance for rotating

SITRANS P DS III pressure transmitters for gauge pressure, dimensions in mm (inch)

© Siemens AG 2013

Technical specifications

SITRANS P DS III series for gauge and absolute pressure, with front-flush diaphragm

	HART		PROFIBUS PA and FOUNDATION Fieldbus	
Input of gauge pressure, with front-flush diaphragm				
Measured variable	Gauge pressure, front-flush			
Spans (infinitely adjustable) or nominal measuring range and max. permissible test pressure	Span (min. ... max.)	Max. perm. test pressure	Nominal measuring range	Max. perm. test pressure
	0.01 ... 1 bar (0.15 ... 14.5 psi)	6 bar (87 psi)	1 bar (14.5 psi)	6 bar (87 psi)
	0.04 ... 4 bar (0.58 ... 58 psi)	10 bar (145 psi)	4 bar (58 psi)	10 bar (145 psi)
	0.16 ... 16 bar (2.32 ... 232 psi)	32 bar (464 psi)	16 bar (232 psi)	32 bar (464 psi)
	0.6 ... 63 bar (9.14 ... 914 psi)	100 bar (1450 psi)	63 bar (914 psi)	100 bar (1450 psi)
Lower measuring limit	100 mbar a (1.45 psia)			
Upper measuring limit	100 % of max. span		100 % of the max. nominal measuring range	
Input of absolute pressure, with front-flush diaphragm				
Measured variable	Absolute pressure, front-flush			
Spans (infinitely adjustable) or nominal measuring range and max. permissible test pressure	Span (min. ... max.)	Max. perm. test pressure	Nominal measuring range	Max. perm. test pressure
	43 ... 1300 mbar a (0.62 ... 18.85 psia)	10 bar a (145 psia)	1300 mbar a (18.85 psia)	10 bar a (145 psia)
	0.16 ... 5 bar a (2.32 ... 72.5 psia)	30 bar a (435 psia)	5 bar a (72.5 psia)	30 bar a (435 psia)
	1 ... 30 bar a (14.5 ... 435 psia)	100 bar a (1450 psia)	30 bar a (435 psia)	100 bar a (1450 psia)
Lower measuring limit	0 bar a (0 psia)			
Upper measuring limit	100 % of max. span		100 % of the max. nominal measuring range	
Output				
Output signal	4 ... 20 mA		Digital PROFIBUS PA and FOUNDATION Fieldbus signal	
• Lower limit (infinitely adjustable)	3.55 mA, factory preset to 3.84 mA		-	
• Upper limit (infinitely adjustable)	23 mA, factory preset to 20.5 mA or optionally set to 22.0 mA		-	
Load				
• Without HART	$R_B \leq (U_H - 10.5\ V)/0.023\ A$ in Ω; U_H: Power supply in V		-	
• With HART	$R_B = 230 \ldots 500\ \Omega$ (SIMATIC PDM) or $R_B = 230 \ldots 1100\ \Omega$ (HART Communicator)		-	
Physical bus	-		IEC 61158-2	
Protection against polarity reversal	Protected against short-circuit and polarity reversal. Each connection against the other with max. supply voltage.			
Electrical damping (step width 0.1 s)	Set to 2 s (0 ... 100 s)			
Measuring accuracy	Acc. to IEC 60770-1			
Reference conditions (All error data refer always refer to the set span)	Increasing characteristic, start-of-scale value 0 bar, stainless steel seal diaphragm, silicone oil filling, room temperature 25 °C (77 °F)) r: Span ratio (r = max. span / set span)			
Error in measurement at limit setting incl. hysteresis and reproducibility				
	Gauge pressure, front-flush	Absolute pressure, front-flush	Gauge pressure, front-flush	Absolute pressure, front-flush
• Linear characteristic			≤ 0.075 %	≤ 0.2 %
- r ≤ 10	≤ (0.0029 · r + 0.071) %	≤ 0.2 %		
- 10 < r ≤ 30	≤ (0.0045 · r + 0.071) %	≤ 0.4 %		
- 30 < r ≤ 100	≤ (0.005 · r + 0.05) %			
Long-term stability (temperature change ± 30 °C (± 54 °F))	≤ (0.25 · r) % per 5 years		≤ 0.25 % per 5 years	

© Siemens AG 2013

SITRANS P DS III series for gauge and absolute pressure, with front-flush diaphragm				
	HART		PROFIBUS PA and FOUNDATION Fieldbus	
	Gauge pressure, front-flush	Absolute pressure, front-flush	Gauge pressure, front-flush	Absolute pressure, front-flush
Influence of ambient temperature				
• at -10 ... +60 °C (14 ... 140 °F)	≤ (0.1 · r + 0.2) %[1]	≤ (0.2 · r + 0.3) %	≤ 0.3 %	≤ 0.5 %
• at -40 ... -10 °C and 60 ... 85 °C (-40 ... +14 °F and 140 ... 185 °F)	≤ (0.1 · r + 0.15) %/10 K	≤ (0.2 · r + 0.3) %/10 K	≤ 0.25 %/10 K	≤ 0.5 %/10 K
Influence of mounting position	0.1 mbar (0.04 inH_2O) per 10° inclination			
Measured Value Resolution	$3 \cdot 10^{-5}$ of nominal measuring range			
Influence of the medium temperature				
• Temperature difference between medium temperature and ambient temperature	3 mbar/10 K (0.04 psi/10 K)			
Rated conditions				
Installation conditions				
Ambient temperature	Observe the temperature class in areas subject to explosion hazard.			
• Measuring cell with silicone oil	-40 ... +85 °C (-40 ... +185 °F)			
• Measuring cell with Neobee oil (with front-flush diaphragm)	-10 ... +85 °C (14 ... +185 °F)			
• Measuring cell with inert liquid (not with front-flush diaphragm)	-20 ... +85 °C (-4 ... +185 °F)			
• Transmitter (with 4-wire connection, observe temperature values of supplementary 4-wire electronics)	-40 ... +85 °C (-40 ... +185 °F)			
• Display readable	-30 ... +85 °C (-22 ... +185 °F)			
• Storage temperature	-50 ... +85 °C (-58 ... +185 °F) (in the case of Neobee: -20 ... +85 °C (-4 ... +185/°F)) (for high temperature oil: -10 ... + 85 °C (14 ... 185 °F))			
• Climatic class				
- Condensation	Relative humidity 0 ... 100 % Condensation permissible, suitable for use in the tropics			
Degree of protection (to IEC 60529)	IP65, IP68, NEMA 4X, enclosure cleaning, resistant to lyes, steam to 150 ° C (302 °F)			
• Electromagnetic Compatibility				
- Emitted interference and interference immunity	Acc. to IEC 61326 and NAMUR NE 21			
Medium conditions	The max. medium temperature of the front-flush process connections is to be taken into account in accordance with the relevant connection standards (e. g. DIN 32676, DIN 11851 etc.).			
Temperature of medium				
• Measuring cell with silicone oil	-40 ... +100 °C (-40 ... +212 °F)			
• Measuring cell with silicone oil (with front-flush diaphragm)	-40 ... +150 °C (-40 ... +302 °F)			
• Measuring cell with Neobee oil (with front-flush diaphragm)	-10 ... +150 °C (14 ... 302 °F)			
• Measuring cell with silicone oil, with temperature decoupler (only for gauge pressure version with front-flush diaphragm)	-40 ... +200 °C (-40 ... +392 °F)			
• Measuring cell with inert filling liquid	-20 ... +100 °C (-4 ... +212 °F)			
• Measuring cell with high-temperature oil (only for gauge pressure version with front-flush diaphragm)	-10 ... +250 °C (14 ... 482 °F)			
Design				
Weight (without options)	≈ 1.5 kg (≈ 3.3 lb)			
Enclosure material	Low-copper die-cast aluminum, GD-AlSi12 or stainless steel precision casting, mat. no. 1.4408			
Wetted parts materials	Stainless steel, mat. no. 1.4404/316L or Hastelloy C276, mat. no. 2.4819			
Measuring cell filling	Silicone oil or inert filling liquid			
Process connection	• Flanges as per EN and ASME • F&B and pharmaceutical flanges			
Surface quality touched-by-media	R_a-values ≤ 0.8 µm (32 µ-inch)/welds R_a) ≤ 1.6 µm (64 µ-inch) (Process connections acc. to 3A; R_a-values ≤ 0.8 µm (32 µ-inch)/welds R_a) ≤ 0.8 µm (32 µ-inch)			

© Siemens AG 2013

SITRANS P DS III series for gauge and absolute pressure, with front-flush diaphragm	HART	PROFIBUS PA and FOUNDATION Fieldbus
Power supply U_H		Supplied through bus
Terminal voltage on transmitter	10.5 ... 45 V DC 10.5 ... 30 V DC in intrinsically-safe mode	-
Separate 24 V power supply necessary	-	No
Bus voltage		
• Not Ex	-	9 ... 32 V
• With intrinsically-safe operation	-	9 ... 24 V
Current consumption		
• Basic current (max.)	-	12.5 mA
• Start-up current ≤ basic current	-	Yes
• Max. current in event of fault	-	15.5 mA
Fault disconnection electronics (FDE) available	-	Yes
Certificates and approvals		
Classification according to PED 97/23/EC	For gases of fluid group 1 and liquids of fluid group 1; complies with requirements of article 3, paragraph 3 (sound engineering practice)	
Explosion protection		
• Intrinsic safety "i"	PTB 13 ATEX 2007 X	
- Marking	Ex II 1/2 G Ex ia/ib IIC T4/T5/T6 Ga/Gb	
- Permissible ambient temperature	-40 ... +85 °C (-40 ... +185 °F) temperature class T4; -40 ... +70 °C (-40 ... +158 °F) temperature class T5; -40 ... +60 °C (-40 ... +140 °F) temperature class T6	
- Connection	To certified intrinsically-safe circuits with peak values: U_i = 30 V, I_i = 100 mA, P_i = 750 mW; R_i = 300 Ω	FISCO supply unit: U_o = 17.5 V, I_o = 380 mA, P_o = 5.32 W Linear barrier: U_o = 24 V, I_o = 250 mA, P_o = 1.2 W
- Effective internal inductance/capacitance	L_i = 0.4 mH, C_i = 6 nF	L_i = 7 µH, C_i = 1.1 nF
• Explosion-proof "d"	PTB 99 ATEX 1160	
- Marking	Ex II 1/2 G Ex d IIC T4/T6 Gb	
- Permissible ambient temperature	-40 ... +85 °C (-40 ... +185 °F) temperature class T4; -40 ... +60 °C (-40 ... +140 °F) temperature class T6	
- Connection	To circuits with values: U_H = 10.5 ... 45 V DC	To circuits with values: U_H = 9 ... 32 V DC
• Dust explosion protection for zone 20	PTB 01 ATEX 2055	
- Marking	Ex II 1 D IP65 T 120 °C Ex II 1/2 D IP65 T 120 °C	
- Permissible ambient temperature	-40 ... +85 °C (-40 ... +185 °F)	
- Max. surface temperature	120 °C (248 °F)	
- Connection	To certified intrinsically-safe circuits with peak values: U_i = 30 V, I_i = 100 mA, P_i = 750 mW, R_i = 300 Ω	FISCO supply unit: U_o = 17.5 V, I_o = 380 mA, P_o = 5.32 W Linear barrier: U_o = 24 V, I_o = 250 mA, P_o = 1 W
- Effective internal inductance/capacitance	L_i = 0.4 mH, C_i = 6 nF	L_i = 7 µH, C_i = 1.1 nF
• Dust explosion protection for zone 21/22	PTB 01 ATEX 2055	
- Marking	Ex II 2 D IP65 T 120 °C	
- Connection	To circuits with values: U_H = 10.5 ... 45 V DC; P_{max} = 1.2 W	To circuits with values: U_H = 9 ... 32 V DC; P_{max} = 1 W
• Type of protection "n" (zone 2)	PTB 13 ATEX 2007 X	
- Marking	Ex II 2/3 G Ex nA II T4/T5/T6 Gc Ex II 2/3 G Ex ic IIC T4/T5/T6 Gc	
- Connection (Ex nA)	U_m = 45 V	U_m = 32 V
- Connections (Ex ic)	To circuits with values: U_i = 45 V	FISCO supply unit ic: U_o = 17.5 V, I_o = 570 mA Linear barrier: U_o = 32 V, I_o = 132 mA, P_o = 1 W
- Effective internal inductance/capacitance	L_i = 0.4 mH, C_i = 6 nF	L_i = 7 µH, C_i = 1.1 nF

© Siemens AG 2013

SITRANS P DS III series for gauge and absolute pressure, with front-flush diaphragm		
	HART	**PROFIBUS PA and FOUNDATION Fieldbus**
Certificates and approvals (continued)		
• Explosion protection acc. to FM	Certificate of Compliance 3008490	
- Identification (XP/DIP) or (IS); (NI)	CL I, DIV 1, GP ABCD T4...T6; CL II, DIV 1, GP EFG; CL III; CL I, ZN 0/1 AEx ia IIC T4...T6; CL I, DIV 2, GP ABCD T4...T6; CL II, DIV 2, GP FG; CL III	
• Explosion protection to CSA	Certificate of Compliance 1153651	
- Identification (XP/DIP) or (IS)	CL I, DIV 1, GP ABCD T4...T6; CL II, DIV 1, GP EFG; CL III; Ex ia IIC T4...T6; CL I, DIV 2, GP ABCD T4...T6; CL II, DIV 2, GP FG; CL III	

[1] Conversion of temperature error per 28 °C. Valid for temperature range -3 ... +53 °C < (0.064 . r + 0.08) % / 28 °C (50 °F).

Hygiene version

In the case of SITRANS P DSIII with 7MF413x front-flush diaphragm, selected connections comply with the requirements of EHEDG.

© Siemens AG 2013

HART communication	
HART	230 ... 1100 Ω
Protocol	HART Version 5.x
Software for computer	SIMATIC PDM
PROFIBUS PA communication	
Simultaneous communication with master class 2 (max.)	4
The address can be set using	Configuration tool or local operation (standard setting address 126)
Cyclic data usage	
• Output byte	5 (one measured value) or 10 (two measured values)
• Input byte	0, 1, or 2 (register operating mode and reset function for metering)
Internal preprocessing	
Device profile	PROFIBUS PA Profile for Process Control Devices Version 3.0, Class B
Function blocks	2
• Analog input	
- Adaptation to customer-specific process variables	Yes, linearly rising or falling characteristic
- Electrical damping, adjustable	0 ... 100 s
- Simulation function	Input /Output
- Failure mode	parameterizable (last good value, substitute value, incorrect value)
- Limit monitoring	Yes, one upper and lower warning limit and one alarm limit respectively
• Register (totalizer)	Can be reset, preset, optional direction of counting, simulation function of register output
- Failure mode	parameterizable (summation with last good value, continuous summation, summation with incorrect value)
- Limit monitoring	One upper and lower warning limit and one alarm limit respectively
• Physical block	1
Transducer blocks	2
• Pressure transducer block	
- Can be calibrated by applying two pressures	Yes
- Monitoring of sensor limits	Yes
- Specification of a container characteristic with	Max. 30 nodes
- Square-rooted characteristic for flow measurement	Yes
- Gradual volume suppression and implementation point of square-root extraction	Parameterizable
- Simulation function for measured pressure value and sensor temperature	Constant value or over parameterizable ramp function

FOUNDATION Fieldbus communication	
Function blocks	3 function blocks analog input, 1 function block PID
• Analog input	
- Adaptation to customer-specific process variables	Yes, linearly rising or falling characteristic
- Electrical damping, adjustable	0 ... 100 s
- Simulation function	Output/input (can be locked within the device with a bridge)
- Failure mode	parameterizable (last good value, substitute value, incorrect value)
- Limit monitoring	Yes, one upper and lower warning limit and one alarm limit respectively
- Square-rooted characteristic for flow measurement	Yes
• PID	Standard FOUNDATION Fieldbus function block
• Physical block	1 resource block
Transducer blocks	1 transducer block Pressure with calibration, 1 transducer block LCD
• Pressure transducer block	
- Can be calibrated by applying two pressures	Yes
- Monitoring of sensor limits	Yes
- Simulation function: Measured pressure value, sensor temperature and electronics temperature	Constant value or over parameterizable ramp function

© Siemens AG 2013

Selection and Ordering data		Article No.			
Pressure transmitter for gauge and absolute pressure, front-flush diaphragm, SITRANS P DS III HART		**7MF4133-**			
		■■■■■-■■■■			
Measuring cell filling	**Measuring cell cleaning**				
Silicone oil	normal	1			
Inert liquid	grease-free to cleanliness level 2	3			
FDA compliant fill fluid					
• Neobee oil	normal	4			
Measuring span (min. ... max.)					
0.01 ... 1 bar	(0.15 ... 14.5 psi)	B			
0.04 ... 4 bar	(0.58 ... 58 psi)	C			
0.16 ... 16 bar	(2.32 ... 232 psi)	D			
0.63 ... 63 bar	(9.14 ... 914 psi)	E			
13 ... 1300 mbar a[1]	(0.62 ... 18.85 psia)[1]	S			
0.05 ... 5 bar a[1]	(0.7 ... 72.5 psia)[1]	T			
0.3 ... 30 bar a[1]	(4.35 ... 435 psia)[1]	U			
Wetted parts materials					
Seal diaphragm	Connection shank				
Stainless steel	Stainless steel	A			
Hastelloy[2]	Stainless steel	B			
Process connection					
• Flange version with Order code M.., N.., R.. or Q..			7		
Non-wetted parts materials					
• Housing made of die-cast aluminium				0	
• Housing stainless steel precision casting				3	
Version					
• Standard versions					1
• International version, English label inscriptions, documentation in 5 languages on CD (no Order code selectable)					2
Explosion protection					
• None					A
• With ATEX, Type of protection:					
- "Intrinsic safety (Ex ia)"					B
- "Explosion-proof (Ex d)" [3]					D
- „Ex nA/ic (Zone 2)"[4]					E
• FM + CSA intrinsic safe (is)					F
• FM + CSA (is + ep) + Ex ia + Ex d (ATEX)					S
• With FM + CSA, Type of protection:					
- "Intrinsic Safe und Explosion Proof (is + xp)"[3]					N C
Electrical connection/cable entry					
• Inner thread M20 x 1.5					B
• Female thread ½-14 NPT					C
• M12 connectors (stainless steel)[5] [6] [7]					F
Display					
• Without display					0
• Without visible display (display concealed, setting: mA)					1
• with visible display, setting: mA					6
• with customer-specific display (setting as specified, Order code "Y21" or "Y22" required)					7

Power supply units see Chap. 7 "Supplementary Components".

Included in delivery of the device:
- Brief instructions (Leporello)
- CD-ROM with detailed documentation

1) Not with temperature decoupler P00 and P10, not for process connections R02, R04, R10 and R11, and can only be ordered in conjunction with silicone oil.
2) Only available for flanges with options M.., N.. and Q..
3) Without cable gland, with blanking plug
4) Bei Konfiguration mit Stecker HAN und M12 ist nur Zündschutzart Ex ic möglich.
5) M12 delivered without cable socket
6) Not available with protection type „Ex d" (options D and N)
7) Not with protection types "Explosion-proof" and "Ex nA", „Intrinsic safe" and „Explosion proof".

© Siemens AG 2013

Selection and Ordering data		Article No.			
Pressure transmitter P for gauge and absolute pressure, front-flush diaphragm:					
SITRANS P DS III with PROFIBUS PA (PA)		**7MF4134-**			
SITRANS P DS III with FOUNDATION Fieldbus (FF)		**7MF4135-**			
		■■■■■-■■■■			
Measuring cell filling	**Measuring cell cleaning**				
Silicone oil	normal	1			
Inert liquid	grease-free to cleanliness level 2	3			
FDA compliant fill fluid					
• Neobee oil	normal	4			
Nominal measuring range					
1 bar	(14.5 psi)	B			
4 bar	(58 psi)	C			
16 bar	(232 psi)	D			
63 bar	(914 psi)	E			
1300 mbar a[1]	(18.85 psia)[1]	S			
5 bar a[1]	(72.5 psia)[1]	T			
30 bar a[1]	(435 psia)[1]	U			
Wetted parts materials					
Seal diaphragm	Connection shank				
Stainless steel	Stainless steel	A			
Hastelloy[2]	Stainless steel	B			
Process connection					
• Flange version with Order code M.., N.., R.. or Q..			7		
Non-wetted parts materials					
• Housing made of die-cast aluminium			0		
• Housing stainless steel precision casting			3		
Version					
• Standard versions				1	
• International version, English label inscriptions, documentation in 5 languages on CD (no Order code selectable)				2	
Explosion protection					
• None				A	
• With ATEX, Type of protection:					
- "Intrinsic safety (Ex ia)"				B	
- "Explosion-proof (Ex d)"[3]				D	
• FM + CSA intrinsic safe (is)				F	
• FM + CSA (is + ep) + Ex ia + Ex d (ATEX)				S	
• With FM + CSA, Type of protection:					
- "Intrinsic Safe und Explosion Proof (is + xp)"[3] (Available soon)				NC	
Electrical connection/cable entry					
• Screwed gland M20 x 1.5				B	
• Screwed gland ½-14 NPT				C	
• Han 7D plug (plastic housing) incl. mating connector[4]				D	
• M12 connectors (stainless steel)[5] [6] [7]				F	

Selection and Ordering data	Article No.	
Pressure transmitter P for gauge and absolute pressure, front-flush diaphragm:		
SITRANS P DS III with PROFIBUS PA (PA)	**7MF4134-**	
SITRANS P DS III with FOUNDATION Fieldbus (FF)	**7MF4135-**	
	■■■■■-■■■■	
Display		
• Without display		0
• Without visible display (display concealed, setting: bar)		1
• With visible display		6
• With customer-specific display (setting as specified, Order code "Y21" required)		7

Included in delivery of the device:
- Brief instructions (Leporello)
- CD-ROM with detailed documentation

1) Not with temperature decoupler P00 and P10, not for process connections R01, R02, R04, R10 and R11, and can only be ordered in conjunction with silicone oil.

2) Only available for flanges with options M.., N.. and Q..

3) Without cable gland, with blanking plug

4) Not in conjunction with types of protection "Explosion-proof" and "Ex ic", "Intrinsic safety" and "Explosion-proof".

5) M12 delivered without cable socket

6) Not available with protection type „Ex d" (optionen D and N)

7) Not with protection types "Explosion-proof" and "Ex nA", „Intrinsic safe" and „Explosion proof".

© Siemens AG 2013

Selection and Ordering data	Order code	HART	PA	FF
Further designs Add "-Z" to Article No. and specify Order code.				
Plug				
• Angled	A32	✓		
• Han 8D (metal, gray)	A33	✓		
Cable sockets for M12 connectors (stainless steel)	A50	✓	✓	✓
Rating plate inscription (instead of German)				
• English	B11	✓	✓	✓
• French	B12	✓	✓	✓
• Spanish	B13	✓	✓	✓
• Italian	B14	✓	✓	✓
English rating plate Pressure units in inH_2O and/or psi	B21	✓	✓	✓
Quality inspection certificate (Five-step factory calibration) to IEC 60770-2	C11	✓	✓	✓
Inspection certificate Acc. to EN 10204-3.1	C12	✓	✓	✓
Factory certificate Acc. to EN 10204-2.2	C14	✓	✓	✓
Functional safety (SIL2) Devices suitable for use according to IEC 61508 and IEC 61511. Includes SIL conformity declaration	C20	✓		
Functional safety (PROFIsafe) Certificate and PROFIsafe protocol	C21[1]		✓	
Functional safety (SIL2/3) Devices suitable for use according to IEC 61508 and IEC 61511. Includes SIL conformity declaration	C23	✓		
Device passport Russia (For price request please contact the technical support www.siemens.com/automation/support-request.)	C99	✓	✓	✓
Setting of upper limit of output signal to 22.0 mA	D05	✓		
Degree of protection IP65/IP68 (only for M20x1.5 and ½-14 NPT)	D12	✓	✓	✓
Oxygen application (In the case of oxygen measurement and inert liquid max. 100 bar (1450 psi) at 60°C (140 °F))	E10	✓	✓	✓
Export approval Korea	E11	✓	✓	✓
CRN approval Canada (Canadian Registration Number)	E22	✓	✓	✓
Dual seal	E24	✓	✓	✓
Explosion-proof "Intrinsic safety" (Ex ia) to INMETRO (Brazil) (only for transmitter 7MF4...-.....-.B..)	E25[2]	✓	✓	✓
"Flameproof" explosion protection according to INMETRO (Brazil) (only for transmitter 7MF4...-.....-.D..)	E26[2]	✓	✓	✓
Explosion-proof "Intrinsic safety" (Ex ia + Ex d) to INMETRO (Brazil) (only for transmitter 7MF4...-.....-.P..)	E28[2]	✓	✓	
Ex Approval IEC Ex (Ex ia) (only for transmitter 7MF4...-.....-.B..)	E45[2]	✓	✓	✓
Ex Approval IEC Ex (Ex id) (only for transmitter 7MF4...-.....-.D..)	E46[2]	✓	✓	✓
"Intrinsic safety" and "Explosion-proof" explosion protection acc. to Kosha (Korea) (only for transmitter 7MF4...-.....-.[B, D]..-Z + E11)	E70[2]	✓	✓	✓

Selection and Ordering data	Order code	HART	PA	FF
Further designs Add "-Z" to Article No. and specify Order code.				
Two coats of lacquer on casing and cover (PU on epoxy)	G10	✓	✓	✓
Transient protector 6 kV (lightning protection)	J01	✓	✓	✓
Flanges to EN 1092-1, Form b1				
• DN 25, PN 40[3]	M11	✓	✓	✓
• DN 25, PN 100[3]	M21	✓	✓	✓
• DN 40, PN 40	M13	✓	✓	✓
• DN 40, PN 100	M23	✓	✓	✓
• DN 50, PN 16	M04	✓	✓	✓
• DN 50, PN 40	M14	✓	✓	✓
• DN 80, PN 16	M06	✓	✓	✓
• DN 80, PN 40	M16	✓	✓	✓
Flanges to ASME B16.5				
• Stainless steel flange 1" class 150[3]	M40	✓	✓	✓
• Stainless steel flange 1½" class 150	M41	✓	✓	✓
• Stainless steel flange 2" class 150	M42	✓	✓	✓
• Stainless steel flange 3" class 150	M43	✓	✓	✓
• Stainless steel flange 4" class 150	M44	✓	✓	✓
• Stainless steel flange 1" class 300[3]	M45	✓	✓	✓
• Stainless steel flange 1½" class 300	M46	✓	✓	✓
• Stainless steel flange 2" class 300	M47	✓	✓	✓
• Stainless steel flange 3" class 300	M48	✓	✓	✓
• Stainless steel flange 4" class 300	M49	✓	✓	✓
Threaded connector to DIN 3852-2, form A, thread to ISO 228[4]				
• G ¾"-A, front-flush	R01	✓	✓	✓
• G 1"-A, front-flush	R02	✓	✓	✓
• G 2"-A, front-flush	R04	✓	✓	✓
Tank connection[5] Sealing is included in delivery				
• TG 52/50, PN 40	R10	✓	✓	✓
• TG 52/150, PN 40	R11	✓	✓	✓
Sanitary process connection according DIN 11851 (Dairy connection with slotted union nut)				
• DN 50, PN 25	N04	✓	✓	✓
• DN 80, PN 25	N06	✓	✓	✓
Tri-Clamp connection according DIN 32676/ISO 2852				
• DN 50/2", PN 16	N14	✓	✓	✓
• DN 65/3", PN 10	N15	✓	✓	✓
Varivent connection Certified to EHEDG				
• Type N = 68 for Varivent housing DN 40 ... 125 und 1½" ... 6", PN 40	N28	✓	✓	✓
Temperature decoupler up to 200 °C[6] for version with front-flush diaphragm	P00	✓	✓	✓
Temperature decoupler up to 250 °C Measuring cell filling: High-temperature oil, only in conjunction with measuring cell filling silicone oil	P10	✓	✓	✓
Bio-Control sanitary process connection Certified to EHEDG				
• DN 50, PN 16	Q53	✓	✓	✓
• DN 65, PN 16	Q54	✓	✓	✓
Sanitary process connection to DRD				
• DN 50, PN 40	M32	✓	✓	✓
SMS socket with union nut				
• 2"	M67	✓	✓	✓
• 2½"	M68	✓	✓	✓
• 3"	M69	✓	✓	✓

© Siemens AG 2013

Selection and Ordering data	Order code	HART	PA	FF
Further designs Add "-Z" to Article No. and specify Order code.				
SMS threaded socket				
• 2"	M73	✓	✓	✓
• 2½"	M74	✓	✓	✓
• 3"	M75	✓	✓	✓
IDF socket with union nut ISO 2853				
• 2"	M82	✓	✓	✓
• 2½"	M83	✓	✓	✓
• 3"	M84	✓	✓	✓
IDF threaded socket ISO 2853				
• 2"	M92	✓	✓	✓
• 2½"	M93	✓	✓	✓
• 3"	M94	✓	✓	✓
Sanitary process connection to NEUMO Bio-Connect screw connection Certified to EHEDG				
• DN 50, PN 16	Q05	✓	✓	✓
• DN 65, PN 16	Q06	✓	✓	✓
• DN 80, PN 16	Q07	✓	✓	✓
• DN 100, PN 16	Q08	✓	✓	✓
• DN 2", PN 16	Q13	✓	✓	✓
• DN 2½", PN 16	Q14	✓	✓	✓
• DN 3", PN 16	Q15	✓	✓	✓
• DN 4", PN 16	Q16	✓	✓	✓
Sanitary process connection to NEUMO Bio-Connect flange connection Certified to EHEDG				
• DN 50, PN 16	Q23	✓	✓	✓
• DN 65, PN 16	Q24	✓	✓	✓
• DN 80, PN 16	Q25	✓	✓	✓
• DN 100, PN 16	Q26	✓	✓	✓
• DN 2", PN 16	Q31	✓	✓	✓
• DN 2½", PN 16	Q32	✓	✓	✓
• DN 3", PN 16	Q33	✓	✓	✓
• DN 4", PN 16	Q34	✓	✓	✓
Sanitary process connection to NEUMO Bio-Connect clamp connection Certified to EHEDG				
• DN 50, PN 16	Q39	✓	✓	✓
• DN 65, PN 10	Q40	✓	✓	✓
• DN 80, PN 10	Q41	✓	✓	✓
• DN 100, PN 10	Q42	✓	✓	✓
• DN 2½", PN 16	Q48	✓	✓	✓
• DN 3", PN 10	Q49	✓	✓	✓
• DN 4", PN 10	Q50	✓	✓	✓
Sanitary process connection to NEUMO Bio-Connect S flange connection Certified to EHEDG				
• DN 50, PN 16	Q63	✓	✓	✓
• DN 65, PN 10	Q64	✓	✓	✓
• DN 80, PN 10	Q65	✓	✓	✓
• DN 100, PN 10	Q66	✓	✓	✓
• DN 2", PN 16	Q72	✓	✓	✓
• DN 2½", PN 10	Q73	✓	✓	✓
• DN 3", PN 10	Q74	✓	✓	✓
• DN 4", PN 10	Q75	✓	✓	✓

Selection and Ordering data	Order code	HART	PA	FF
Further designs Add "-Z" to Article No. and specify Order code.				
Aseptic threaded socket to DIN 11864-1 Form A approved according to EHEDG				
• DN 50, PN 25	N33	✓	✓	✓
• DN 65, PN 25	N34	✓	✓	✓
• DN 80, PN 25	N35	✓	✓	✓
• DN 100, PN 25	N36	✓	✓	✓
Aseptic flange with notch to DIN 11864-2 Form A approved according to EHEDG				
• DN 50, PN 16	N43	✓	✓	✓
• DN 65, PN 16	N44	✓	✓	✓
• DN 80, PN 16	N45	✓	✓	✓
• DN 100, PN 16	N46	✓	✓	✓
Aseptic flange with groove to DIN 11864-2 Form A approved according to EHEDG				
• DN 50, PN 16	N43 + P11	✓	✓	✓
• DN 65, PN 16	N44 + P11	✓	✓	✓
• DN 80, PN 16	N45 + P11	✓	✓	✓
• DN 100, PN 16	N46 + P11	✓	✓	✓
Aseptic clamp with groove to DIN 11864-3 FormA approved according to EHEDG				
• DN 50, PN 25	N53	✓	✓	✓
• DN 65, PN 25	N54	✓	✓	✓
• DN 80, PN 16	N55	✓	✓	✓
• DN 100, PN 16	N56	✓	✓	✓

1) Profisafe transmitters can only be operated with the S7 F Systems V6.1 configuration software in combination with S7-400H.

2) Option does not include ATEX approval, but instead includes only the country-specific approval.

3) Special seal in Viton included in the scope of delivery

4) Lower measuring limit -100 mbar (1.45 psi).

5) The weldable socket can be ordered under accessories.

6) The maximum permissible temperatures of the medium depend on the respective cell fillings.

© Siemens AG 2013

Selection and Ordering data	Order code	HART	PA	FF
Additional data				
Please add **"-Z"** to Article No. and specify Order code(s) and plain text.				
Measuring range to be set Specify in plain text (max. 5 characters): Y01: ... up to ... mbar, bar, kPa, MPa, psi	**Y01**	✓	✓[1]	
Stainless steel tag plate and entry in device variable (measuring point description) Max. 16 characters, specify in plain text: Y15:	**Y15**	✓	✓	✓
Measuring point text (entry in device variable) Max. 27 characters, specify in plain text: Y16:	**Y16**	✓	✓	✓
Entry of HART address (TAG) Max. 8 characters, specify in plain text: Y17:	**Y17**	✓		
Setting of pressure indicator in pressure units Specify in plain text (standard setting: bar): Y21: mbar, bar, kPa, MPa, psi, ... Note: The following pressure units can be selected: bar, mbar, mm H_2O*), inH_2O*), ftH_2O*), mmHG, inHG, psi, Pa, kPa, MPa, g/cm^2, kg/cm^2, Torr, ATM or % *) ref. temperature 20 °C	**Y21**	✓	✓	✓
Setting of pressure indication in non-pressure units[2] Specify in plain text: Y22: ..... up to ..... l/min, m^3/h, m, USgpm, ... (specification of measuring range in pressure units "Y01" is essential, unit with max. 5 characters)	**Y22 + Y01**	✓		
Preset bus address possible between 1 and 126 Specify in plain text: Y25:	**Y25**		✓	✓
Damping adjustment in seconds (0 ... 100 s)	**Y30**	✓	✓	✓

Only Y01, Y15, Y16, Y17, Y21, Y22, Y25 and D05 can be factory preset

✓ = available

ordering example

Item line:	7MF4133-1DB20-1AB7-Z
B line:	A22 + Y01 + Y21
C line:	Y01: 1 ... 10 bar (14.5 ... 145 psi)
C line:	Y21: bar (psi)

[1] Measuring accuracies for PROFIBUS PA transmitters with Option Y01 are calculated in the same way as for HART devices.

[2] Preset values can only be changed over SIMATIC PDM.

© Siemens AG 2013

Dimensional drawings

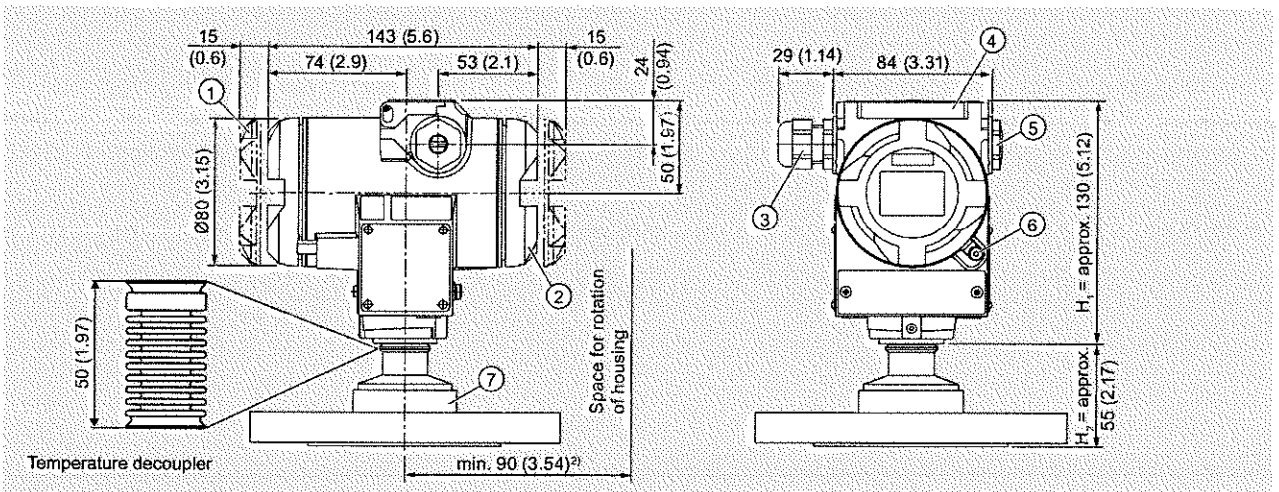

1. Electronic side, digital display (longer overall length for cover with window)[1]
2. Terminal side[1]
3. Electrical connection: Screwed gland M20 x 1,5 or screwed gland ½-14 NPT or M12 conector
4. Protective cover over keys
5. Blanking plug
6. Screw cover - safety bracket (only for type of protection "Explosion-proof enclosure", not shown in the drawing)
7. Process connection: see flange tables

1)
2) Allow approx. 20 mm (0.79 inch) thread length to permit unscrewing
92 mm (3.6 inch) for minimum distance to permit rotation with indicator

SITRANS P pressure transmitters, DS III series for gauge pressure, with front-flush diaphragm, dimensions in mm (inch)

The diagram shows a SITRANS P DS III with an example of a flange. In this drawing the height is subdivided into H_1 and H_2.

H_1 = Height of the SITRANS P300 up to a defined cross-section

H_2 = Height of the flange up to this defined cross-section

Only the height H_2 is indicated in the dimensions of the flanges.

© Siemens AG 2013

Flanges as per EN and ASME

Flange to EN

EN 1092-1

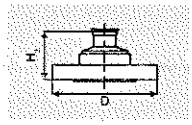

Order code	DN	PN	ØD	H_2
M11	25	40	115 mm (4.5")	Approx. 52 mm (2")
M21	25	100	140 mm (5.5")	
M13	40	40	150 mm (5.9")	
M23	40	100	170 mm (6.7")	
M04	50	16	165 mm (6.5")	
M14	50	40	165 mm (6.5")	
M06	80	16	200 mm (7.9")	
M16	80	40	200 mm (7.9")	

Flanges to ASME

ASME B16.5

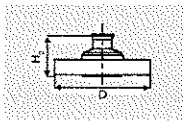

Order code	DN	PN	ØD	H_2
M40	1"	150	110 mm (4.3")	Approx. 52 mm (2")
M41	1½"	150	130 mm (5.1")	
M42	2"	150	150 mm (5.9")	
M43	3"	150	190 mm (7.5")	
M44	4"	150	230 mm (9.1")	
M45	1"	300	125 mm (4.9")	
M46	1½"	300	155 mm (6.1")	
M47	2"	300	165 mm (6.5")	
M48	3"	300	210 mm (8.1")	
M49	4"	300	255 mm (10.0")	

NuG and pharmaceutical connections

Connections to DIN

DIN 11851 (milk pipe union with slotted union nut)

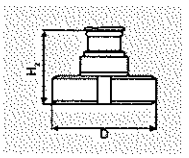

Order code	DN	PN	ØD	H_2
N04	50	25	92 mm (3.6")	Approx. 52 mm (2")
N06	80	25	127 mm (5.0")	

Tri-Clamp nach DIN 32676

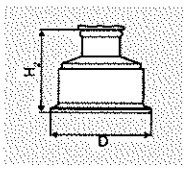

Order code	DN	PN	ØD	H_2
N14	50	16	64 mm (2.5")	Approx. 52 mm (2")
N15	65	10	91 mm (3.6")	

Other connections

Varivent connection

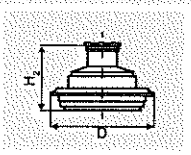

Order code	DN	PN	ØD	H_2
N28	40 ... 125	40	84 mm (3.3")	Approx. 52 mm (2")

Biocontrol connection

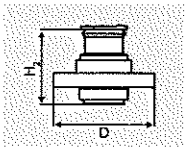

Order code	DN	PN	ØD	H_2
Q53	50	16	90 mm (3.5")	Approx. 52 mm (2")
Q54	65	16	120 mm (4.7")	

Sanitary process connection to DRD

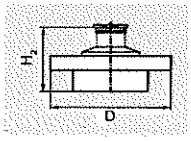

Order code	DN	PN	ØD	H_2
M32	50	40	105 mm (4.1")	Approx. 52 mm (2")

Sanitary process screw connection to NEUMO Bio-Connect

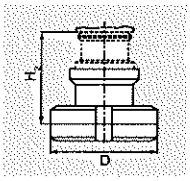

Order code	DN	PN	ØD	H_2
Q05	50	16	82 mm (3.2")	Approx. 52 mm (2")
Q06	65	16	105 mm (4.1")	
Q07	80	16	115 mm (4.5")	
Q08	100	16	145 mm (5.7")	
Q13	2"	16	82 mm (3.2")	
Q14	2½"	16	105 mm (4.1")	
Q15	3"	16	105 mm (4.1")	
Q16	4"	16	145 mm (5.7")	

Sanitary process connection to NEUMO Bio-Connect flange connection

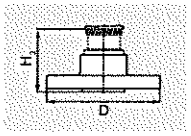

Order code	DN	PN	ØD	H_2
Q23	50	16	110 mm (4.3")	Approx. 52 mm (2")
Q24	65	16	140 mm (5.5")	
Q25	80	16	150 mm (5.9")	
Q26	100	16	175 mm (6.9")	
Q31	2"	16	100 mm (3.9")	
Q32	2½"	16	110 mm (4.3")	
Q33	3"	16	140 mm (5.5")	
Q34	4"	16	175 mm (6.9")	

Sanitary process connection to NEUMO Bio-Connect clamp connection

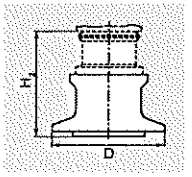

Order code	DN	PN	ØD	H_2
Q39	50	16	77.4 mm (3.0")	Approx. 52 mm (2")
Q40	65	10	90.9 mm (3.6")	
Q41	80	10	106 mm (4.2")	
Q42	100	10	119 mm (4.7")	
Q48	2½"	16	77.4 mm (3.0")	
Q49	3"	10	90.9 mm (3.6")	
Q50	4"	10	119 mm (4.7")	

Sanitary process connection to NEUMO Bio-Connect S flange connection

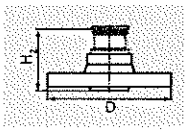

Order code	DN	PN	ØD	H_2
Q63	50	16	125 mm (4.9")	Approx. 52 mm (2")
Q64	65	10	145 mm (5.7")	
Q65	80	10	155 mm (6.1")	
Q66	100	10	180 mm (7.1")	
Q72	2"	16	125 mm (4.9")	
Q73	2½"	10	135 mm (5.3")	
Q74	3"	10	145 mm (5.7")	
Q75	4"	10	180 mm (7.1")	

© Siemens AG 2013

Pressure Measurement
Transmitters for general requirements

SITRANS P DS III for gauge/absolute pressure, with front-flush diaphragm

1

Threaded connection G¾", G1" and G2" acc. to DIN 3852

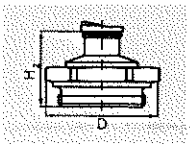

Order code	DN	PN	ØD	H_2
R01	¾"	60	37 mm (1.5")	Approx. 45 mm (1.8")
R02	1"	60	48 mm (1.9")	Approx. 47 mm (1.9")
R04	2"	60	78 mm (3.1")	Approx. 52 mm (2")

Tank connection TG 52/50 and TG52/150

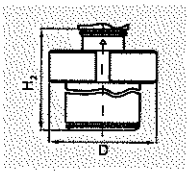

Order code	DN	PN	ØD	H_2
R10	25	40	63 mm (2.5")	Approx. 63 mm (2.5")
R11	25	40	63 mm (2.5")	Approx. 170 mm (6.7")

SMS socket with union nut

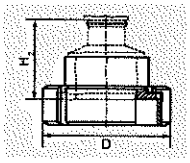

Order code	DN	PN	ØD	H_2
M67	2"	25	84 mm (3.3")	Approx. 52 mm (2")
M68	2½"	25	100 mm (3.9")	
M69	3"	25	114 mm (4.5")	

SMS threaded socket

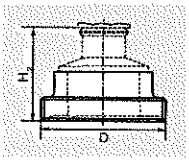

Order code	DN	PN	ØD	H_2
M73	2"	25	70 x 1/6 mm	Approx. 52 mm (2")
M74	2½"	25	85 x 1/6 mm	
M75	3"	25	98 x 1/6 mm	

IDF socket with union nut

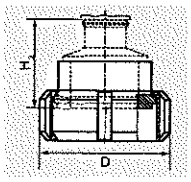

Order code	DN	PN	ØD	H_2
M82	2"	25	77 mm (3")	Approx. 52 mm (2")
M83	2½"	25	91 mm (3.6")	
M84	3"	25	106 mm (4.2")	

IDF threaded socket

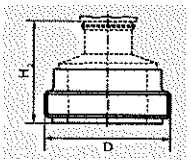

Order code	DN	PN	ØD	H_2
M92	2"	25	64 mm (2.5")	Approx. 52 mm (2")
M93	2½"	25	77.5 mm (3.1")	
M94	3"	25	91 mm (3.6")	

Aseptic threaded socket to DIN 11864-1 Form A

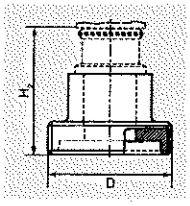

Order code	DN	PN	ØD	H_2
N33	50	25	78 x 1/6"	Approx. 52 mm (2")
N34	65	25	95 x 1/6"	
N35	80	25	110 x ¼"	
N36	100	25	130 x ¼"	

Aseptic flange with notch to DIN 11864-2 Form A

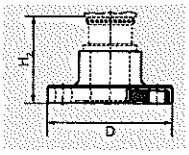

Order code	DN	PN	ØD	H_2
N43	50	16	94	Approx. 52 mm (2")
N44	65	16	113	
N45	80	16	133	
N46	100	16	159	

Aseptic flange with groove to DIN 11864-2 Form A

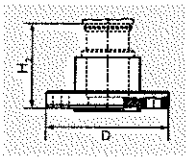

Order code	DN	PN	ØD	H_2
N43 + P11	50	16	94	Approx. 52 mm (2")
N44 + P11	65	16	113	
N45 + P11	80	16	133	
N46 + P11	100	16	159	

Aseptic clamp with groove to DIN 11864-3 Form A

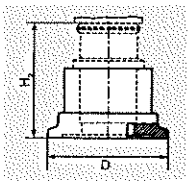

Order code	DN	PN	ØD	H_2
N53	50	25	77.5	Approx. 52 mm (2")
N54	65	25	91	
N55	80	16	106	
N56	100	16	130	

© Siemens AG 2013

Technical specifications

SITRANS P DS III series for absolute pressure (from the gauge pressure series)

	HART		PROFIBUS PA and FOUNDATION Fieldbus	
Input				
Measured variable	Absolute pressure			
Spans (infinitely adjustable) or nominal measuring range and max. permissible test pressure	Span (min. ... max.)	Max. perm. test pressure	Nominal measuring range	Max. perm. test pressure
	8.3 ... 250 mbar a (0.12 ... 3.62 psia)	6 bar a (87 psia)	250 mbar a (3.6 psia)	6 bar a (87 psia)
	43 ... 1300 mbar a (0.62 ... 18.85 psi a)	10 bar a (145 psia)	1300 mbar a (18.9 psi a)	10 bar a (145 psia)
	160 ... 5000 mbar a (2.32 ... 72.5 psia)	30 bar a (435 psia)	5 bar a (72.5 psia)	30 bar a (435 psia)
	1 ... 30 bar a (14.5 ... 435 psia)	100 bar a (1450 psia)	30 bar a (435 psia)	100 bar a (1450 psia)
Lower measuring limit				
• Measuring cell with silicone oil filling	0 mbar a (0 psia)			
Upper measuring limit	100 % of max. span			
Output				
Output signal	4 ... 20 mA		Digital PROFIBUS PA and FOUNDATION Fieldbus signal	
• Lower limit (infinitely adjustable)	3.55 mA, factory preset to 3.84 mA		-	
• Upper limit (infinitely adjustable)	23 mA, factory preset to 20.5 mA or optionally set to 22.0 mA		-	
Load				
• Without HART	$R_B \leq (U_H - 10.5\ V)/0.023\ A$ in Ω U_H: Power supply in V		-	
• With HART	R_B = 230 ... 500 Ω (SIMATIC PDM) or R_B = 230 ... 1100 Ω (HART Communicator)		-	
Physical bus	-		IEC 61158-2	
Protection against polarity reversal	Protected against short-circuit and polarity reversal. Each connection against the other with max. supply voltage.			
Electrical damping (step width 0.1 s)	Set to 2 s (0 ... 100 s)			
Measuring accuracy	Acc. to IEC 60770-1			
Reference conditions (All error data refer always refer to the set span)	Increasing characteristic, start-of-scale value 0 bar, stainless steel seal diaphragm, silicone oil filling, room temperature 25 °C (77 °F)) r: Span ratio (r = max. span / set span)			
Error in measurement at limit setting incl. hysteresis and reproducibility				
• Linear characteristic			≤ 0.1 %	
- r ≤ 10	≤ 0.1 %			
- 10 < r ≤ 30	≤ 0.2 %			
Long-term stability (temperature change ± 30 °C (± 54 °F))	≤ (0.1 · r) %/year		≤ 0.1 %/year	
Influence of ambient temperature				
• at -10 ... +60 °C (14 ... 140 °F)	≤ (0.1 · r + 0.2) %[1)]		≤ 0.3 %	
• at -40 ... -10 °C and 60 ... 85 °C (-40 ... +14 °F and 140 ... 185 °F)	≤ (0.1 · r + 0.15) %/10 K		≤ 0.25 %/10 K	
Measured Value Resolution	-		$3 \cdot 10^{-5}$ of nominal measuring range	

© Siemens AG 2013

SITRANS P DS III series for absolute pressure (from the gauge pressure series)	HART	PROFIBUS PA and FOUNDATION Fieldbus
Rated conditions		
Degree of protection (to IEC 60529)	IP65 (optional IP65/IP68)	
Temperature of medium		
• Measuring cell with silicone oil filling	-40 ... +100 °C (-40 ... +212 °F) -20 ... +100 °C (-4 ... +212 °F) with 30 bar a measuring cell	
• Measuring cell with inert filling liquid	-20 ... +100 °C (-4 ... +212 °F)	
• In conjunction with dust explosion protection	-20 ... +60 °C (-4 ... +140 °F)	
Ambient conditions		
• Ambient temperature		
- Transmitter (with 4-wire connection, observe temperature values of supplementary 4-wire electronics)	-40 ... +85 °C (-40 ... +185 °F)	
- Display readable	-30 ... +85 °C (-22 ... +185 °F)	
• Storage temperature	-50 ... +85 °C (-58 ... +185 °F)	
• Climatic class		
- Condensation	Relative humidity 0 ... 100 % Condensation permissible, suitable for use in the tropics	
• Electromagnetic Compatibility		
- Emitted interference and interference immunity	Acc. to IEC 61326 and NAMUR NE 21	
Design		
Weight (without options)	≈ 1.5 kg (≈ 3.3 lb)	
Enclosure material	Low-copper die-cast aluminum, GD-AlSi 12 or stainless steel precision casting, mat. no. 1.4408	
Wetted parts materials		
• Connection shank	Stainless steel, mat. no. 1.4404/316L or Hastelloy C4, mat. no. 2.4610	
• Oval flange	Stainless steel, mat. no. 1.4404/316L	
• Seal diaphragm	Stainless steel, mat. no. 1.4404/316L or Hastelloy C276, mat. no. 2.4819	
Measuring cell filling	Silicone oil or inert filling liquid (maximum value with oxygen measurement pressure 100 bar (1450 psi) at 60 °C (140 °F))	
Process connection	Connection shank G½B to EN 837-1, female thread ½-14 NPT or oval flange (PN 160 (MAWP 2320 psia)) to DIN 19213 with mounting thread M10 or $^{7}/_{16}$-20 UNF to IEC 61518	
Material of mounting bracket		
• Steel	Sheet-steel, Mat. No. 1.0330, chrome-plated	
• Stainless steel	Sheet stainless steel, mat. no. 1.4301 (SS 304)	
Power supply U_H		Supplied through bus
Terminal voltage on transmitter	10.5 ... 45 V DC 10.5 ... 30 V DC in intrinsically-safe mode	-
Separate 24 V power supply necessary	-	No
Bus voltage		
• Not Ex	-	9 ... 32 V
• With intrinsically-safe operation	-	9 ... 24 V
Current consumption		
• Basic current (max.)	-	12.5 mA
• Start-up current ≤ basic current	-	Yes
• Max. current in event of fault	-	15.5 mA
Fault disconnection electronics (FDE) available	-	Yes

© Siemens AG 2013

SITRANS P DS III series for absolute pressure (from the gauge pressure series)	HART	PROFIBUS PA and FOUNDATION Fieldbus
Certificates and approvals		
Classification according to PED 97/23/EC	For gases of fluid group 1 and liquids of fluid group 1; complies with requirements of article 3, paragraph 3 (sound engineering practice)	
Explosion protection		
• Intrinsic safety "i"	PTB 13 ATEX 2007 X	
- Marking	Ex II 1/2 G Ex ia/ib IIC T4/T5/T6 Ga/Gb	
- Permissible ambient temperature	-40 ... +85 °C (-40 ... +185 °F) temperature class T4; -40 ... +70 °C (-40 ... +158 °F) temperature class T5; -40 ... +60 °C (-40 ... +140 °F) temperature class T6	
- Connection	To certified intrinsically-safe circuits with peak values: U_i = 30 V, I_i = 100 mA, P_i = 750 mW; R_i = 300 Ω	FISCO supply unit: U_o = 17.5 V, I_o = 380 mA, P_o = 5.32 W Linear barrier: U_o = 24 V, I_o = 250 mA, P_o = 1.2 W
- Effective internal inductance/capacitance	L_i = 0.4 mH, C_i = 6 nF	L_i = 7 µH, C_i = 1.1 nF
• Explosion-proof "d"	PTB 99 ATEX 1160	
- Marking	Ex II 1/2 G Ex d IIC T4/T6 Gb	
- Permissible ambient temperature	-40 ... +85 °C (-40 ... +185 °F) temperature class T4; -40 ... +60 °C (-40 ... +140 °F) temperature class T6	
- Connection	To circuits with values: U_H = 10.5 ... 45 V DC	To circuits with values: U_H = 9 ... 32 V DC
• Dust explosion protection for zone 20	PTB 01 ATEX 2055	
- Marking	Ex II 1 D IP65 T 120 °C Ex II 1/2 D IP65 T 120 °C	
- Permissible ambient temperature	-40 ... +85 °C (-40 ... +185 °F)	
- Max. surface temperature	120 °C (248 °F)	
- Connection	To certified intrinsically-safe circuits with peak values: U_i = 30 V, I_i = 100 mA, P_i = 750 mW, R_i = 300 Ω	FISCO supply unit: U_o = 17.5 V, I_o = 380 mA, P_o = 5.32 W Linear barrier: U_o = 24 V, I_o = 250 mA, P_o = 1.2 W
- Effective internal inductance/capacitance	L_i = 0.4 mH, C_i = 6 nF	L_i = 7 µH, C_i = 1.1 nF
• Dust explosion protection for zone 21/22	PTB 01 ATEX 2055	
- Marking	Ex II 2 D IP65 T 120 °C	
- Connection	To circuits with values: U_H = 10.5 ... 45 V DC; P_{max} = 1.2 W	To circuits with values: U_H = 9 ... 32 V DC; P_{max} = 1 W
• Type of protection "n" (zone 2)	PTB 13 ATEX 2007 X	
- Marking	Ex II 2/3 G Ex nA II T4/T5/T6 Gc Ex II 2/3 G Ex ic IIC T4/T5/T6 Gc	
- Connection (Ex nA)	U_m = 45 V	U_m = 32 V
- Connection (Ex ic)	To circuits with values: U_i = 45 V	FISCO supply unit ic: U_o = 17.5 V, I_o = 570 mA Linear barrier: U_o = 32 V, I_o = 132 mA, P_o = 1 W
- Effective internal inductance/capacitance	L_i = 0.4 mH, C_i = 6 nF	L_i = 7 µH, C_i = 1,1 nF
• Explosion protection acc. to FM	Certificate of Compliance 3008490	
- Identification (XP/DIP) or (IS); (NI)	CL I, DIV 1, GP ABCD T4...T6; CL II, DIV 1, GP EFG; CL III; CL I, ZN 0/1 AEx ia IIC T4...T6; CL I, DIV 2, GP ABCD T4...T6; CL II, DIV 2, GP FG; CL III	
• Explosion protection to CSA	Certificate of Compliance 1153651	
- Identification (XP/DIP) or (IS)	CL I, DIV 1, GP ABCD T4...T6; CL II, DIV 1, GP EFG; CL III; Ex ia IIC T4...T6; CL I, DIV 2, GP ABCD T4...T6; CL II, DIV 2, GP FG; CL III	

1) Conversion of temperature error per 28 °C. Valid for temperature range -3 ... +53 °C < (0.08. r + 0.16) % / 28 °C (50 °F).

© Siemens AG 2013

HART communication	
HART	230 ... 1100 Ω
Protocol	HART Version 5.x
Software for computer	SIMATIC PDM
PROFIBUS PA communication	
Simultaneous communication with master class 2 (max.)	4
The address can be set using	Configuration tool or local operation (standard setting address 126)
Cyclic data usage	
• Output byte	5 (one measured value) or 10 (two measured values)
• Input byte	0, 1, or 2 (register operating mode and reset function for metering)
Internal preprocessing	
Device profile	PROFIBUS PA Profile for Process Control Devices Version 3.0, Class B
Function blocks	2
• Analog input	
- Adaptation to customer-specific process variables	Yes, linearly rising or falling characteristic
- Electrical damping, adjustable	0 to 100 s
- Simulation function	Input /Output
- Failure mode	parameterizable (last good value, substitute value, incorrect value)
- Limit monitoring	Yes, one upper and lower warning limit and one alarm limit respectively
• Register (totalizer)	Can be reset, preset, optional direction of counting, simulation function of register output
- Failure mode	parameterizable (summation with last good value, continuous summation, summation with incorrect value)
- Limit monitoring	One upper and lower warning limit and one alarm limit respectively
• Physical block	1
Transducer blocks	2
• Pressure transducer block	
- Can be calibrated by applying two pressures	Yes
- Monitoring of sensor limits	Yes
- Specification of a container characteristic with	Max. 30 nodes
- Square-rooted characteristic for flow measurement	Yes
- Gradual volume suppression and implementation point of square-root extraction	Parameterizable
- Simulation function for measured pressure value and sensor temperature	Constant value or over parameterizable ramp function

FOUNDATION Fieldbus communication	
Function blocks	3 function blocks analog input, 1 function block PID
• Analog input	
- Adaptation to customer-specific process variables	Yes, linearly rising or falling characteristic
- Electrical damping, adjustable	0 ... 100 s
- Simulation function	Output/input (can be locked within the device with a bridge)
- Failure mode	parameterizable (last good value, substitute value, incorrect value)
- Limit monitoring	Yes, one upper and lower warning limit and one alarm limit respectively
- Square-rooted characteristic for flow measurement	Yes
• PID	Standard FOUNDATION Fieldbus function block
• Physical block	1 resource block
Transducer blocks	1 transducer block Pressure with calibration, 1 transducer block LCD
• Pressure transducer block	
- Can be calibrated by applying two pressures	Yes
- Monitoring of sensor limits	Yes
- Simulation function: Measured pressure value, sensor temperature and electronics temperature	Constant value or over parameterizable ramp function

© Siemens AG 2013

Selection and Ordering data			Article No.
Pressure transmitters for absolute pressure from gauge pressure series SITRANS P DS III with HART			7MF4233 - ■■■■■ - ■■■■
Measuring cell filling	**Measuring cell cleaning**		
Silicone oil	normal	☆	1
Inert liquid [1]	grease-free to cleanliness level 2		3
Measuring span (min. ... max.)			
8.3 ... 250 mbar a	(0.12 ... 3.62 psia)	☆	D
43 ... 1300 mbar a	(0.62 ... 18.85 psia)	☆	F
0.16 ... 5 bar a	(2.32 ... 72.5 psia)	☆	G
1 ... 30 bar a	(14.5 ... 435 psia)	☆	H
Wetted parts materials			
Seal diaphragm	Process connection		
Stainless steel	Stainless steel	☆	A
Hastelloy	Stainless steel		B
Hastelloy	Hastelloy		C
Version for diaphragm seal [2) 3) 4) 5) 6)]			Y
Process connection			
• Connection shank G½B to EN 837-1		☆	0
• Female thread ½-14 NPT		☆	1
• Stainless steel oval flange with process connection (Oval flange has no female thread)			
- Mounting thread $^{7}/_{16}$-20 UNF to EN 61518			2
- Mounting thread M10 to DIN 19213			3
- Mounting thread M12 to DIN 19213			4
• Male thread M20 x 1.5			5
• Male thread ½ -14 NPT			6
Non-wetted parts materials			
• Housing made of die-cast aluminium		☆	0
• Housing stainless steel precision casting [7)]			3
Version			
• Standard versions		☆	1
• International version, English label inscriptions, documentation in 5 languages on CD (no Order code selectable)		☆	2
Explosion protection			
• None		☆	A
• With ATEX, Type of protection:			
- "Intrinsic safety (Ex ia)"		☆	B
- "Explosion-proof (Ex d)" [8)]		☆	D
- "Intrinsic safety and flameproof enclosure" (Ex ia + Ex d)" [9)]		☆	P
- "Ex nA/ic (Zone 2)" [10)]		☆	E
- "Intrinsic safety, explosion-proof enclosure and dust explosion protection (Ex ia+ Ex d + Zone 1D/2D)" [9)]		☆	R
• FM + CSA intrinsic safe (is)			F
• FM + CSA (is + ep) + Ex ia + Ex d (ATEX)			S
• With FM + CSA, Type of protection:			
- "Intrinsic Safe und Explosion Proof (is + xp)" [8)]		☆	NC
Electrical connection/cable entry			
• Screwed gland Pg 13.5 [11)]			A
• Screwed gland M20x1.5		☆	B
• Screwed gland ½-14 NPT		☆	C
• Han 7D plug (plastic housing) incl. mating connector [11)]			D
• M12 connectors (stainless steel) [12) 13) 14)]			F

Selection and Ordering data		Article No.
Pressure transmitters for absolute pressure from gauge pressure series SITRANS P DS III with HART		7MF4233 - ■■■■■ - ■■■■
Display		
• Without display	☆	0
• Without visible display (display concealed, setting: mA)	☆	1
• With visible display	☆	6
• with customer-specific display (setting as specified, Order code "Y21" or "Y22" required)	☆	7

☆ We can offer shorter delivery times for configurations designated with the Quick Ship Symbol ☆. For details see page 9/5 in the appendix.

Power supply units see Chap. 7 "Supplementary Components".

Included in delivery of the device:
- Brief instructions (Leporello)
- CD-ROM with detailed documentation

1) For oxygen application, add Order code E10.

2) Version 7MF4233-1DY... only up to max. span 200 mbar a (80 inH_2O a).

3) When the manufacture's certificate (calibration certificate) has to be ordered for transmitters with diaphragm seals according to IEC 60770-2, it is recommended only to order this certificate exclusively with the diaphragm seals. The measuring accuracy of the total combination is certified here.If the acceptance test certificate 3.1.is ordered for the transmitter with mounted diaphragm seals this certificate must also be ordered with the respective remote seals.

4) If the acceptance test certificate 3.1.is ordered for the transmitter with mounted diaphragm seals this certificate must also be ordered with the respective remote seals.

5) The diaphragm seal is to be specified with a separate order number and must be included wiht the tranmitter order number, for example 7MF423.-..Y..-.... and 7MF4900-1...-.B

6) The standard measuring cell filling for configurations with remote seals (Y) is silicone oil.

7) Not in conjunction with Electrical connection "Screwed gland Pg 13.5" and "Han7D plug".

8) Without cable gland, with blanking plug.

9) With enclosed cable gland Ex ia and blanking plug.

10) Configurations with HAN and M12 connectors are only available in Ex ic.

11) Not in conjunction with types of protection "Explosion-proof" and "Ex nA", "Intrinsic safety" and "Explosion-proof".

12) M12 delivered without cable socket

13) Not available with protection type "Ex d" (optiones D, P, N and R)

14) Not with protection types „Explosion-proof" and „Ex nA", „Intrinsic safe" and „Explosion proof".

© Siemens AG 2013

Selection and Ordering data		Article No.
Pressure transmitters for absolute pressure from gauge pressure series		
SITRANS P DS III with PROFIBUS PA (PA)		**7MF4234 -**
SITRANS P DS III with FOUNDATION Fieldbus (FF)		**7MF4235 -**
		■■■■■ - ■■■■
Measuring cell filling	**Measuring cell cleaning**	
Silicone oil	normal	1
Inert liquid[1]	grease-free to cleanliness level 2	3
Nominal measuring range		
250 mbar a	(3.62 psia)	D
1300 mbar a	(18.85 psia)	F
5 bar a	(72.5 psia)	G
30 bar a	(435 psia)	H
Wetted parts materials		
Seal diaphragm	Process connection	
Stainless steel	Stainless steel	A
Hastelloy	Stainless steel	B
Hastelloy	Hastelloy	C
Version as diaphragm seal [2) 3) 4) 5) 6)]		Y
Process connection		
• Connection shank G½B to EN 837-1		0
• Female thread ½-14 NPT		1
• Stainless steel oval flange with process connection (Oval flange has no female thread)		
- Mounting thread $^{7}/_{16}$-20 UNF to IEC 61518		2
- Mounting thread M10 to DIN 19213		3
- Mounting thread M12 to DIN 19213		4
• Male thread M20 x 1.5		5
• Male thread ½ -14 NPT		6
Non-wetted parts materials		
• Housing made of die-cast aluminium		0
• Housing stainless steel precision casting		3
Version		
• Standard versions		1
• International version, English label inscriptions, documentation in 5 languages on CD (no Order code selectable)		2
Explosion protection		
• None		A
• With ATEX, Type of protection:		
- "Intrinsic safety (Ex ia)"		B
- "Explosion-proof (Ex d)"[7)]		D
- "Intrinsic safety and flameproof enclosure" (Ex ia + Ex d)"[8)]		P
- "Ex nA/ic (Zone 2)" [9)]		E
- "Intrinsic safety, explosion-proof enclosure and dust explosion protection (Ex ia + Ex d + Zone 1D/2D)"[8)] (not for DS III FF)		R
• FM + CSA intrinsic safe (is)		F
• FM + CSA (is + ep) + Ex ia + Ex d (ATEX)		S
• With FM + CSA, Type of protection:		
- "Intrinsic Safe und Explosion Proof (is + xp)"[7)]		NC
Electrical connection/cable entry		
• Screwed gland M20 x 1.5		B
• Screwed gland ½-14 NPT		C
• M12 connectors (stainless steel) [10) 11)]		F

Selection and Ordering data	Article No.
Pressure transmitters for absolute pressure from gauge pressure series	
SITRANS P DS III with PROFIBUS PA (PA)	**7MF4234 -**
SITRANS P DS III with FOUNDATION Fieldbus (FF)	**7MF4235 -**
	■■■■■ - ■■■■
Display	
• Without display	0
• Without visible display (display concealed, setting: bar)	1
• With visible display	6
• with customer-specific display (setting as specified, Order code "Y21" or "Y22" required)	7

Included in delivery of the device:
- Brief instructions (Leporello)
- CD-ROM with detailed documentation

1) For oxygen application, add Order code E10.

2) Version 7MF4233-1DY... only up to max. span 200 mbar a (2.9 psia).

3) When the manufacture's certificate (calibration certificate) has to be ordered for transmitters with diaphragm seals according to IEC 60770-2, it is recommended only to order this certificate exclusively with the diaphragm seals. The measuring accuracy of the total combination is certified here.

4) If the acceptance test certificate 3.1.is ordered for the transmitter with mounted diaphragm seals this certificate must also be ordered with the respective remote seals.

5) The diaphragm seal is to be specified with a separate order number and must be included wiht the tranmitter order number, for example 7MF423.-..Y..-.... and 7MF4900-1...-.B

6) The standard measuring cell filling for configurations with remote seals (Y) is silicone oil.

7) Without cable gland, with blanking plug.

8) With enclosed cable gland Ex ia and blanking plug.

9) Configurations with HAN and M12 connectors are only available in Ex ic.

10) M12 delivered without cable socket

11) Not with protection types „Explosion-proof" and „Ex nA", „Intrinsic safe" and „Explosion proof".

© Siemens AG 2013

Selection and Ordering data	Order code	HART	PA	FF
Further designs				
Add "-Z" to Article No. and specify Order code.				
Pressure transmitter with mounting bracket (1x fixing angle, 2 x nut, 2 x U-washer or 1 x bracket, 2 x nut, 2 x U-washer) made of:				
• Steel	A01	✓	✓	✓
• Stainless steel	A02	✓	✓	✓
Plug				
• Han 7D (metal, gray)	A30	✓		
• Han 8U (instead of Han 7D)	A31	✓		
• Angled	A32	✓		
• Han 8D (metal, gray)	A33	✓		
Cable sockets for M12 connectors (stainless steel)	A50	✓	✓	✓
Rating plate inscription (instead of German)				
• English	B11	✓	✓	✓
• French	B12	✓	✓	✓
• Spanish	B13	✓	✓	✓
• Italian	B14	✓	✓	✓
English rating plate Pressure units in inH_2O and/or psi	B21	✓	✓	✓
Quality inspection certificate (Five-step factory calibration) to IEC 60770-2[1]	C11	✓	✓	✓
Inspection certificate[2] Acc. to EN 10204-3.1	C12	✓	✓	✓
Factory certificate Acc. to EN 10204-2.2	C14	✓	✓	✓
Functional safety (SIL2) Devices suitable for use according to IEC 61508 and IEC 61511. Includes SIL conformity declaration	C20	✓		
Functional safety (PROFIsafe) Certificate and PROFIsafe protocol	C21[3]		✓	
Functional safety (SIL2/3) Devices suitable for use according to IEC 61508 and IEC 61511. Includes SIL conformity declaration	C23	✓		
Device passport Russia (For price request please contact the technical support www.siemens.com/automation/support-request)	C99	✓	✓	✓
Setting of upper limit of output signal to 22.0 mA	D05	✓		
Manufacturer's declaration acc. to NACE (MR 0103-2012 and MR 0175-2009)	D07	✓	✓	✓
Degree of protection IP65/IP68 (only for M20 x 1.5 and ½-14 NPT)	D12	✓	✓	✓
Supplied with oval flange (1 item), PTFE packing and screws in thread of oval flange	D37	✓	✓	✓

Selection and Ordering data	Order code	HART	PA	FF
Further designs				
Add "-Z" to Article No. and specify Order code.				
Use in or on zone 1D/2D (only together with type of protection "Intrinsic safety" (transmitter 7MF4...-.....-.B.. Ex ia)")	E01	✓	✓	✓
Oxygen application (In the case of oxygen measurement and inert liquid max. 100 bar (1450 psi) at 60°C (140 °F))	E10	✓	✓	✓
Export approval Korea	E11	✓	✓	✓
CRN approval Canada (Canadian Registration Number)	E22	✓	✓	✓
Dual seal	E24	✓	✓	✓
Explosion-proof "Intrinsic safety" (Ex ia) to INMETRO (Brazil) (only for transmitter 7MF4...-.....-.B..)	E25[4]	✓	✓	✓
"Flameproof" explosion protection according to INMETRO (Brazil) (only for transmitter 7MF4...-.....-.D..)	E26[4]	✓	✓	✓
Explosion-proof "Intrinsic safety" (Ex ia + Ex d) to INMETRO (Brazil) (only for transmitter 7MF4...-.....-.P..)	E28[4]	✓	✓	
Ex Approval IEC Ex (Ex ia) (only for transmitter 7MF4...-.....-.B..)	E45[4]	✓	✓	✓
Ex Approval IEC Ex (Ex id) (only for transmitter 7MF4...-.....-.D..)	E46[4]	✓	✓	✓
Explosion-proof "Intrinsic safety" to NEPSI (China) (only for transmitter 7MF4...-.....-.B..)	E55[4]	✓	✓	✓
Explosion protection "Explosion-proof" to NEPSI (China) (only for transmitter 7MF4...-.....-.D..)	E56[4]	✓	✓	✓
Explosion-proof "Zone 2" to NEPSI (China) (only for transmitter 7MF4...-.....-.E..)	E57[4]	✓	✓	✓
"Intrinsic safety" and "Explosion-proof" explosion protection acc. to Kosha (Korea) (only for transmitter 7MF4...-.....-.[B, D]..-Z + E11)	E70[4]	✓	✓	✓
Two coats of lacquer on casing and cover (PU on epoxy)	G10	✓	✓	✓
Transient protector 6 kV (lightning protection)	J01	✓	✓	✓

We can offer shorter delivery times for configurations designated with the Quick Ship Symbol. For details see page 9/5 in the appendix.

1) When the manufacture's certificate (calibration certificate) has to be ordered for transmitters with diaphragm seals according to IEC 60770-2, it is recommended only to order this certificate exclusively with the diaphragm seals. The measuring accuracy of the total combination is certified here.

2) If the acceptance test certificate 3.1 is ordered for the transmitter with mounted diaphragm seals this certificate must also be ordered with the respective remote seals.

3) Profisafe transmitters can only be operated with the S7 F Systems V6.1 configuration software in combination with S7-400H

4) Option does not include ATEX approval, but instead includes only the country-specific approval.

© Siemens AG 2013

1

Selection and Ordering data	Order code	HART	PA	FF
Additional data				
Please add **"-Z"** to Article No. and specify Order code(s) and plain text.				
Measuring range to be set Specify in plain text (max. 5 characters): Y01: ... up to ... mbar, bar, kPa, MPa, psi	✉ **Y01**	✓	✓[1]	
Stainless steel tag plate and entry in device variable (measuring point description) Max. 16 characters, specify in plain text: Y15:	✉ **Y15**	✓	✓	✓
Measuring point text (entry in device variable) Max. 27 characters, specify in plain text: Y16:	✉ **Y16**	✓	✓	✓
Entry of HART address (TAG) Max. 8 characters, specify in plain text: Y17:	✉ **Y17**	✓		
Setting of pressure indication in pressure units Specify in plain text (standard setting: bar): Y21: mbar, bar, kPa, MPa, psi, ... Note: The following pressure units can be selected: bar, mbar, mm H_2O*), inH_2O*), ftH_2O*), mmHG, inHG, psi, Pa, kPa, MPa, g/cm^2, kg/cm^2, Torr, ATM or % *) ref. temperature 20 °C	✉ **Y21**	✓	✓	✓
Setting of pressure indication in non-pressure units[2] Specify in plain text: Y22: ..... up to ..... l/min, m^3/h, m, USgpm, ... (specification of measuring range in pressure units "Y01" is essential, unit with max. 5 characters)	✉ **Y22 + Y01**	✓		
Preset bus address possible between 1 and 126 Specify in plain text: Y25:	**Y25**		✓	✓
Damping adjustment in seconds (0 ... 100 s)	**Y30**	✓	✓	✓

✉ We can offer shorter delivery times for configurations designated with the Quick Ship Symbol ✉. For details see page 9/5 in the appendix.

Factory mounting of valve manifolds, see accessories.

Only Y01, Y15, Y16, Y17, Y21, Y22, Y25 and D05 can be factory preset

✓ = available

[1] Measuring accuracies for PROFIBUS PA transmitters with Option Y01 are calculated in the same way as for HART devices.

[2] Preset values can only be changed over SIMATIC PDM.

© Siemens AG 2013

Dimensional drawings

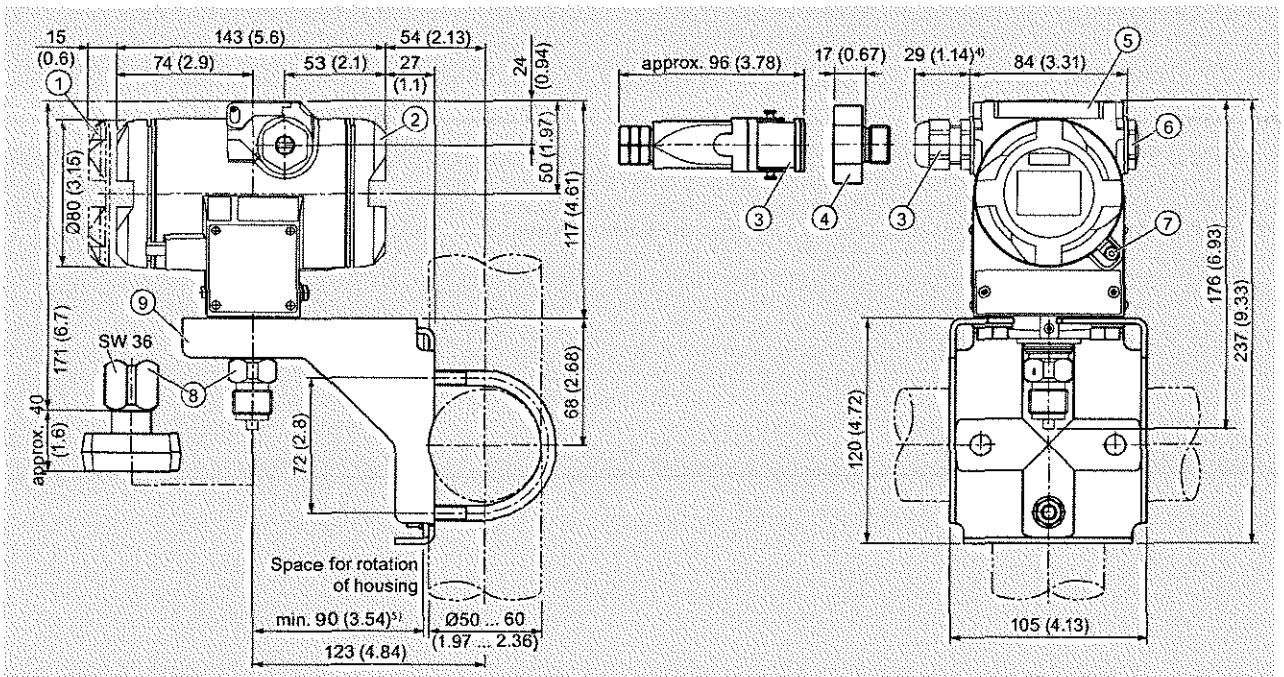

1. Electronic side, digital display (longer overall length for cover with window)[1]
2. Terminal side[1]
3. Electrical connection: Screwed gland Pg 13,5 (adapter)(Adapter)[2] [3], Screwed gland M20 x 1,5 or Screwed gland ½-14 NPT or Han 7D/Han 8D[2] [3] plug
4. Harting adapter
5. Protective cover over keys
6. Blanking plug
7. Screw cover - safety bracket (only for type of protection "Explosion-proof enclosure", not shown in the drawing)
8. Process connection: Connection shank G½B or Oval flange
9. Mounting bracket (option)

1) Allow approx. 20 mm (0.79 inch) thread length to permit unscrewing
2) Not with type of protection "Explosion-proof enclosure"
3) Not with type of protection "FM + CSA" [IS + XP]"
4) For Pg 13,5 with adapter approx. 45 mm (1.77 inch)
5) Minimum distance for rotating

SITRANS P DS III pressure transmitters for absolute pressure, from the pressure series, dimensions in mm (inch)

© Siemens AG 2013

Technical specifications

SITRANS P, DS III for absolute pressure (from the differential pressure series)	HART		PROFIBUS PA and FOUNDATION Fieldbus	
Input				
Measured variable	Absolute pressure			
Spans (infinitely adjustable) or nominal measuring range and max. permissible operating pressure	Span (min. ... max.)	Maximum operating pressure	Nominal measuring range	Maximum operating pressure
	8.3 ... 250 mbar a (0.12 ... 3.62 psia)	32 bar a (464 psia)	250 mbar a (3.62 psia)	32 bar a (464 psia)
	43 ... 1300 mbar a (0.62 ... 18.85 psia)	32 bar a (464 psia)	1300 bar a (18.85 psia)	32 bar a (464 psia)
	160 ... 5000 mbar a (2.32 ... 72.52 psia)	32 bar a (464 psia)	5 bar a (72.5 psia)	32 bar a (464 psia)
	1 ... 30 bar a (14.5 ... 435 psia)	160 bar a (2320 psia)	30 bar a (435 psia)	160 bar a (2320 psia)
	5.3 ... 100 bar a (76.9 ... 1450 psia)	160 bar a (2320 psia) (for connection thread M10 and 7/16-20 UNF in the process flanges)	100 bar a (1450 psia)	160 bar a (2320 psia) (for connection thread M10 and 7/16-20 UNF in the process flanges)
Lower measuring limit				
• Measuring cell with silicone oil filling	0 mbar a (0 psia)			
Upper measuring limit	100 % of max. span			
Output				
Output signal	4 ... 20 mA		Digital PROFIBUS PA and FOUNDATION Fieldbus signal	
• Lower limit (infinitely adjustable)	3.55 mA, factory preset to 3.84 mA		-	
• Upper limit (infinitely adjustable)	23 mA, factory preset to 20.5 mA or optionally set to 22.0 mA		-	
Load				
• Without HART	$R_B \leq (U_H - 10.5\ V)/0.023\ A$ in Ω; U_H: Power supply in V		-	
• With HART	$R_B = 230 \ldots 500\ \Omega$ (SIMATIC PDM) or $R_B = 230 \ldots 1100\ \Omega$ (HART Communicator)		-	
Physical bus	-		IEC 61158-2	
Protection against polarity reversal	Protected against short-circuit and polarity reversal. Each connection against the other with max. supply voltage.			
Electrical damping (step width 0.1 s)	Set to 2 s (0 ... 100 s)			
Measuring accuracy	Acc. to IEC 60770-1			
Reference conditions (All error data refer always refer to the set span)	Increasing characteristic, start-of-scale value 0 bar, stainless steel seal diaphragm, silicone oil filling, room temperature 25 °C (77 °F)) r: Span ratio (r = max. span / set span)			
Error in measurement at limit setting incl. hysteresis and reproducibility				
• Linear characteristic			≤ 0.1 %	
- r ≤ 10	≤ 0.1 %			
- 10 < r ≤ 30	≤ 0.2 %			
Long-term stability (temperature change ± 30 °C (± 54 °F))	≤ (0.1 · r) %/year		≤ 0.1 %/year	
Influence of ambient temperature				
• at -10 ... +60 °C (14 ... 140 °F)	≤ (0.1 · r + 0.2) %[1)]		≤ 0.3 %	
• at -40 ... -10 °C and 60 ... 85 °C (-40 ... +14 °F and 140 ... 185 °F)	≤ (0.1 · r + 0.15) %/10 K		≤ 0.25 %/10 K	
Measured Value Resolution	-		$3 \cdot 10^{-5}$ of nominal measuring range	

© Siemens AG 2013

SITRANS P, DS III for absolute pressure (from the differential pressure series)	HART	PROFIBUS PA and FOUNDATION Fieldbus
Rated conditions		
Degree of protection (to IEC 60529)	IP65 (optional IP65/IP68)	
Temperature of medium		
• Measuring cell with silicone oil filling	-40 ... +100 °C (-40 ... +212 °F)	
• Measuring cell with inert filling liquid	-20 ... +100 °C (-4 ... +212 °F)	
• In conjunction with dust explosion protection	-20 ... +60 °C (-4 ... +140 °F)	
Ambient conditions		
• Ambient temperature		
- Transmitter (with 4-wire connection, observe temperature values of supplementary 4-wire electronics)	-40 ... +85 °C (-40 ... +185 °F)	
- Display readable	-30 ... +85 °C (-22 ... +185 °F)	
• Storage temperature	-50 ... +85 °C (-58 ... +185 °F)	
• Climatic class		
- Condensation	Relative humidity 0 ... 100 % Condensation permissible, suitable for use in the tropics	
• Electromagnetic Compatibility		
- Emitted interference and interference immunity	Acc. to IEC 61326 and NAMUR NE 21	
Design		
Weight (without options)	≈ 4.5 kg (≈ 9.9 (lb)	
Enclosure material	Low-copper die-cast aluminum, GD-AlSi12 or stainless steel precision casting, mat. no. 1.4408	
Wetted parts materials		
• Seal diaphragm	Stainless steel, mat. no. 1.4404/316L or Hastelloy C276, mat. no. 2.4819, Monel, mat. no. 2.4360, tantalum or gold	
• Process flanges and sealing screw	Stainless steel, mat. no. 1.4408, Hastelloy C4, mat. no. 2.4610 or Monel, mat. no. 2.4360	
• O-Ring	FPM (Viton) or optionally: PTFE, FEP, FEPM and NBR	
Measuring cell filling	Silicone oil or inert filling liquid (maximum value with oxigen measurement pressure 100 bar (1450 psi) at 60 °C (140 °F))	
Process connection	¼-18 NPT and flange connection with mounting thread M10 to DIN 19213 or $^{7}/_{16}$-20 UNF to IEC 61518	
Material of mounting bracket		
• Steel	Sheet-steel, Mat. No. 1.0330, chrome-plated	
• Stainless steel	Sheet stainless steel, mat. no. 1.4301 (SS 304)	
Power supply U_H		Supplied through bus
Terminal voltage on transmitter	10.5 ... 45 V DC 10.5 ... 30 V DC in intrinsically-safe mode	-
Separate 24 V power supply necessary	-	No
Bus voltage		
• Not Ex	-	9 ... 32 V
• With intrinsically-safe operation	-	9 ... 24 V
Current consumption		
• Basic current (max.)	-	12.5 mA
• Start-up current ≤ basic current	-	Yes
• Max. current in event of fault	-	15.5 mA
Fault disconnection electronics (FDE) available	-	Yes

© Siemens AG 2013

SITRANS P, DS III for absolute pressure (from the differential pressure series)	HART	PROFIBUS PA and FOUNDATION Fieldbus
Certificates and approvals		
Classification according to PED 97/23/EC	For gases of fluid group 1 and liquids of fluid group 1; complies with requirements of article 3, paragraph 3 (sound engineering practice)	
Explosion protection		
• Intrinsic safety "i"	PTB 13 ATEX 2007 X	
- Marking	Ex II 1/2 G Ex ia/ib IIC T4/T5/T6 Ga/Gb	
- Permissible ambient temperature	-40 ... +85 °C (-40 ... +185 °F) temperature class T4; -40 ... +70 °C (-40 ... +158 °F) temperature class T5; -40 ... +60 °C (-40 ... +140 °F) temperature class T6	
- Connection	To certified intrinsically-safe circuits with peak values: U_i = 30 V, I_i = 100 mA, P_i = 750 mW; R_i = 300 Ω	FISCO supply unit: U_o = 17.5 V, I_o = 380 mA, P_o = 5.32 W Linear barrier: U_o = 24 V, I_o = 250 mA, P_o = 1.2 W
- Effective internal inductance/capacitance	L_i = 0.4 mH, C_i = 6 nF	L_i = 7 µH, C_i = 1.1 nF
• Explosion-proof "d"	PTB 99 ATEX 1160	
- Marking	Ex II 1/2 G Ex d IIC T4/T6 Gb	
- Permissible ambient temperature	-40 ... +85 °C (-40 ... +185 °F) temperature class T4; -40 ... +60 °C (-40 ... +140 °F) temperature class T6	
- Connection	To circuits with values: U_H = 10.5 ... 45 V DC	To circuits with values: U_H = 9 ... 32 V DC
• Dust explosion protection for zone 20	PTB 01 ATEX 2055	
- Marking	Ex II 1 D IP65 T 120 °C Ex II 1/2 D IP65 T 120 °C	
- Permissible ambient temperature	-40 ... +85 °C (-40 ... +185 °F)	
- Max. surface temperature	120 °C (248 °F)	
- Connection	To certified intrinsically-safe circuits with peak values: U_i = 30 V, I_i = 100 mA, P_i = 750 mW, R_i = 300 Ω	FISCO supply unit: U_o = 17.5 V, I_o = 380 mA, P_o = 5.32 W Linear barrier: U_o = 24 V, I_o = 250 mA, P_o = 1.2 W
- Effective internal inductance/capacitance	L_i = 0.4 mH, C_i = 6 nF	L_i = 7 µH, C_i = 1.1 nF
• Dust explosion protection for zone 21/22	PTB 01 ATEX 2055	
- Marking	Ex II 2 D IP65 T 120 °C	
- Connection	To circuits with values: U_H = 10.5 ... 45 V DC; P_{max} = 1.2 W	To circuits with values: U_H = 9 ... 32 V DC; P_{max} = 1 W
• Type of protection "n" (zone 2)	PTB 13 ATEX 2007 X	
- Marking	Ex II 2/3 G Ex nA II T4/T5/T6 Gc Ex II 2/3 G Ex ic IIC T4/T5/T6 Gc	
- Connection (Ex nA)	U_m = 45 V	U_m = 32 V
- Connection (Ex ic)	To circuits with values: U_i = 45 V	FISCO supply unit ic: U_o = 17.5 V, I_o = 570 mA Linear barrier: U_o = 32 V, I_o = 132 mA, P_o = 1 W
- Effective internal inductance/capacitance	L_i = 0.4 mH, C_i = 6 nF	L_i = 7 µH, C_i = 1.1 nF
• Explosion protection acc. to FM	Certificate of Compliance 3008490	
- Identification (XP/DIP) or (IS); (NI)	CL I, DIV 1, GP ABCD T4...T6; CL II, DIV 1, GP EFG; CL III; CL I, ZN 0/1 AEx ia IIC T4...T6; CL I, DIV 2, GP ABCD T4...T6; CL II, DIV 2, GP FG; CL III	
• Explosion protection to CSA	Certificate of Compliance 1153651	
- Identification (XP/DIP) or (IS)	CL I, DIV 1, GP ABCD T4...T6; CL II, DIV 1, GP EFG; CL III; Ex ia IIC T4...T6; CL I, DIV 2, GP ABCD T4...T6; CL II, DIV 2, GP FG; CL III	

[1] Conversion of temperature error per 28 °C. Valid for temperature range -3 ... +53 °C < (0.08. r + 0.16) % / 28 °C (50 °F).

© Siemens AG 2013

HART communication	
HART	230 ... 1100 Ω
Protocol	HART Version 5.x
Software for computer	SIMATIC PDM
PROFIBUS PA communication	
Simultaneous communication with master class 2 (max.)	4
The address can be set using	Configuration tool or local operation (standard setting address 126)
Cyclic data usage	
• Output byte	5 (one measured value) or 10 (two measured values)
• Input byte	0, 1, or 2 (register operating mode and reset function for metering)
Internal preprocessing	
Device profile	PROFIBUS PA Profile for Process Control Devices Version 3.0, Class B
Function blocks	2
• Analog input	
- Adaptation to customer-specific process variables	Yes, linearly rising or falling characteristic
- Electrical damping, adjustable	0 ... 100 s
- Simulation function	Input /Output
- Failure mode	parameterizable (last good value, substitute value, incorrect value)
- Limit monitoring	Yes, one upper and lower warning limit and one alarm limit respectively
• Register (totalizer)	Can be reset, preset, optional direction of counting, simulation function of register output
- Failure mode	parameterizable (summation with last good value, continuous summation, summation with incorrect value)
- Limit monitoring	One upper and lower warning limit and one alarm limit respectively
• Physical block	1
Transducer blocks	2
• Pressure transducer block	
- Can be calibrated by applying two pressures	Yes
- Monitoring of sensor limits	Yes
- Specification of a container characteristic with	Max. 30 nodes
- Square-rooted characteristic for flow measurement	Yes
- Gradual volume suppression and implementation point of square-root extraction	Parameterizable
- Simulation function for measured pressure value and sensor temperature	Constant value or over parameterizable ramp function

FOUNDATION Fieldbus communication	
Function blocks	3 function blocks analog input, 1 function block PID
• Analog input	
- Adaptation to customer-specific process variables	Yes, linearly rising or falling characteristic
- Electrical damping, adjustable	0 to 100 s
- Simulation function	Output/input (can be locked within the device with a bridge)
- Failure mode	parameterizable (last good value, substitute value, incorrect value)
- Limit monitoring	Yes, one upper and lower warning limit and one alarm limit respectively
- Square-rooted characteristic for flow measurement	Yes
• PID	Standard FOUNDATION Fieldbus function block
• Physical block	1 resource block
Transducer blocks	1 transducer block Pressure with calibration, 1 transducer block LCD
• Pressure transducer block	
- Can be calibrated by applying two pressures	Yes
- Monitoring of sensor limits	Yes
- Simulation function: Measured pressure value, sensor temperature and electronics temperature	Constant value or over parameterizable ramp function

© Siemens AG 2013

1

Selection and Ordering data		Article No.
Pressure transmitters for absolute pressure from differential pressure series, SITRANS P DS III with HART		7MF4333 - ■■■■■ - ■■■■
Measuring cell filling	**Measuring cell cleaning**	
Silicone oil	normal	1
Inert liquid[1]	grease-free to cleanliness level 2	3
Measuring span (min. ... max.)		
8.3 ... 250 mbar a	(0.12 ... 3.62 psia)	D
43 ... 1300 mbar a	(0.62 ... 18.85 psia)	F
0.16 ... 5 bar a	(2.32 ... 72.5 psia)	G
1 ... 30 bar a	(14.5 ... 435 psia)	H
5.3 ... 100 bar a	(76.9 ... 1450 psia)	KE
Wetted parts materials		
Seal diaphragm	Parts of measuring cell	
Stainless steel	Stainless steel	A
Hastelloy	Stainless steel	B
Hastelloy	Hastelloy	C
Tantalum	Tantalum	E
Monel	Monel	H
Gold	Gold	L
Version for diaphragm seal[2) 3) 4) 5) 6)]		Y
Process connection		
Female thread ¼-18 NPT with flange connection		
• Sealing screw opposite process connection		
- Mounting thread $^{7}/_{16}$-20 UNF to EN 61518		2
- Mounting thread M10 to DIN 19213 (only for replacement requirement)		0
• Vent on side of process flange [7)]		
- Mounting thread $^{7}/_{16}$-20 UNF to EN 61518		6
- Mounting thread M10 to DIN 19213 (only for replacement requirement)		4
Non-wetted parts materials		
process flange screws	Electronics housing	
Stainless steel	Die-cast aluminum	2
Stainless steel	Stainless steel precision casting[8)]	3
Version		
• Standard versions		1
• International version, English label inscriptions, documentation in 5 languages on CD (no Order code selectable)		2
Explosion protection		
• None		A
• With ATEX, Type of protection:		
- "Intrinsic safety (Ex ia)"		B
- "Explosion-proof (Ex d)"[9)]		D
- "Intrinsic safety and flameproof enclosure" (Ex ia + Ex d)"[10)]		P
- "Ex nA/ic (Zone 2)"[11)]		E
- "Intrinsic safety, explosion-proof enclosure and dust explosion protection (Ex ia+ Ex d + Zone 1D/2D)"[10)]		R
• FM + CSA intrinsic safe (is)		F
• FM + CSA (is + ep) + Ex ia + Ex d (ATEX)		S
• With FM + CSA, Type of protection:		
- "Intrinsic Safe und Explosion Proof (is + xp)"[9)]		NC
Electrical connection/cable entry		
• Screwed gland Pg 13.5[12)]		A
• Screwed gland M20 x 1.5		B
• Screwed gland ½-14 NPT		C
• Han 7D plug (plastic housing) incl. mating connector[12)]		D
• M12 connectors (stainless steel)[12) 13)]		F

Selection and Ordering data	Article No.
Pressure transmitters for absolute pressure from differential pressure series, SITRANS P DS III with HART	7MF4333 - ■■■■■ - ■■■■
Display	
• Without display	0
• Without visible display (display concealed, setting: mA)	1
• With visible display	6
• with customer-specific display (setting as specified, Order code "Y21" or "Y22" required)	7

Power supply units see Chap. 7 "Supplementary Components".

Included in delivery of the device:
- Brief instructions (Leporello)
- CD-ROM with detailed documentation
- Sealing plug(s) or sealing screw(s) for the process flanges(s)

1) For oxygen applications, add Order code E10.

2) Version 7MF4333-1DY... only up to max. span 200 mbar a (2.9 psia).

3) When the manufacture's certificate (calibration certificate) has to be ordered for transmitters with diaphragm seals according to IEC 60770-2, it is recommended only to order this certificate exclusively with the diaphragm seals. The measuring accuracy of the total combination is certified here.

4) If the acceptance test certificate 3.1.is ordered for the transmitter with mounted diaphragm seals this certificate must also be ordered with the respective remote seals.

5) The diaphragm seal is to be specified with a separate order number and must be included wiht the tranmitter order number, for example 7MF433.-..Y..-.... und 7MF4900-1...-.B

6) The standard measuring cell filling for configurations with remote seals (Y) is silicone oil.

7) Not for span "5.3 ... 100 bar a (76.9 ... 1450 psia)". Position of the top vent valve in the process flange (see dimensional drawing).

8) Not in conjunction with Electrical connection "Screwed gland Pg 13.5" and "Han7D plug".

9) Without cable gland, with blanking plug

10) With enclosed cable gland Ex ia and blanking plug

11) Configurations with HAN and M12 connectors are only available in Ex ic.

12) Not in conjunction with types of protection "Explosion-proof" and "Ex nA", "Intrinsic safety" and "Explosion-proof".

13) M12 delivered without cable socket

© Siemens AG 2013

Selection and Ordering data	Article No.
Pressure transmitter for absolute pressure from differential pressure series	
SITRANS P DS III with PROFIBUS PA (PA)	**7MF4334-**
SITRANS P DS III with FOUNDATION Fieldbus (FF)	**7MF4335-**
	■■■■■-■■■■

Measuring cell filling	**Measuring cell cleaning**	
Silicone oil	normal	1
Inert liquid[1]	grease-free to cleanliness level 2	3
Nominal measuring range		
250 mbar a	(3.62 psia)	D
1300 mbar a	(18.85 psia)	F
5 bar a	(72.5 psia)	G
30 bar a	(435 psia)	H
100 bar a	(1450 psia)	K E
Wetted parts materials		
Seal diaphragm	Parts of measuring cell	
Stainless steel	Stainless steel	A
Hastelloy	Stainless steel	B
Hastelloy	Hastelloy	C
Tantalum	Tantalum	E
Monel	Monel	H
Gold	Gold	L
Version as diaphragm seal [2) 3) 4) 5) 6)]		Y
Process connection		
Female thread ¼-18 NPT with flange connection		
• Sealing screw opposite process connection		
- Mounting thread $^{7}/_{16}$-20 UNF to IEC 61518		2
- Mounting thread M10 to DIN 19213 (only for replacement requirement)		0
• Vent on side of process flange [7)]		
- Mounting thread $^{7}/_{16}$-20 UNF to IEC 61518		6
- Mounting thread M10 to DIN 19213 (only for replacement requirement)		4
Non-wetted parts materials		
process flange screws	Electronics housing	
Stainless steel	Die-cast aluminum	2
Stainless steel	Stainless steel precision casting	3
Version		
• Standard versions		1
• International version, English label inscriptions, documentation in 5 languages on CD (no Order code selectable)		2
Explosion protection		
• None		A
• With ATEX, Type of protection:		
- "Intrinsic safety (Ex ia)"		B
- "Explosion-proof (Ex d)"[8)]		D
- "Intrinsic safety and flameproof enclosure" (Ex ia + Ex d)"[9)]		P
- "Ex nA/ic (Zone 2)"[10)]		E
- "Intrinsic safety, explosion-proof enclosure and dust explosion protection (Ex ia + Ex d + Zone 1D/2D)"[9)] (not for DS III FF)		R
• FM + CSA intrinsic safe (is)		F
• FM + CSA (is + ep) + Ex ia + Ex d (ATEX)		S
• With FM + CSA, Type of protection:		
- "Intrinsic Safe und Explosion Proof (is + xp)"[8)]		N C
Electrical connection/cable entry		
• Screwed gland M20 x 1.5		B
• Screwed gland ½-14 NPT		C
• M12 connectors (stainless steel)[11) 12) 13)]		F

Selection and Ordering data	Article No.
Pressure transmitter for absolute pressure from differential pressure series	
SITRANS P DS III with PROFIBUS PA (PA)	**7MF4334-**
SITRANS P DS III with FOUNDATION Fieldbus (FF)	**7MF4335-**
	■■■■■-■■■■

Display	
• Without display	0
• Without visible display (display concealed, setting: bar)	1
• With visible display	6
• With customer-specific display (setting as specified, Order code "Y21" required)	7

Included in delivery of the device:
- Brief instructions (Leporello)
- CD-ROM with detailed documentation
- Sealing plug(s) or sealing screw(s) for the process flanges(s)

1) For oxygen application, add Order code E10.

2) Version 7MF4334-1DY... only up to max. span 200 mbar a (80 inH_2O a).

3) When the manufacture's certificate (calibration certificate) has to be ordered for transmitters with diaphragm seals according to IEC 60770-2, it is recommended only to order this certificate exclusively with the diaphragm seals. The measuring accuracy of the total combination is certified here.

4) If the acceptance test certificate 3.1.is ordered for the transmitter with mounted diaphragm seals this certificate must also be ordered with the respective remote seals.

5) The diaphragm seal is to be specified with a separate order number and must be included wiht the tranmitter order number, for example 7MF433.-..Y..-.... und 7MF4900-1...-.B

6) The standard measuring cell filling for configurations with remote seals (Y) is silicone oil.

7) Not for nominal measuring range 100 bar a (1450 psia). Position of the top vent valve in the process flange (see dimensional drawing).

8) Without cable gland, with blanking plug

9) With enclosed cable gland Ex ia and blanking plug

10) Configurations with HAN and M12 connectors are only available in Ex ic.

11) M12 delivered without cable socket

12) Not available with protection type „Ex d" (options D, P, N and R)

13) Not in conjunction with types of protection "Explosion-proof" and "Ex nA", "Intrinsic safety" and "Explosion-proof".

© Siemens AG 2013

Selection and Ordering data	Order code	HART	PA	FF
Further designs Add "-Z" to Article No. and specify Order code.				
Pressure transmitter with mounting bracket (1x fixing angle, 2 x nut, 2 x U-washer or 1 x bracket, 2 x nut, 2 x U-washer) made of:				
• Steel	A01	✓	✓	✓
• Stainless steel	A02	✓	✓	✓
O-rings for process flanges (instead of FPM (Viton))				
• PTFE (Teflon)	A20	✓	✓	✓
• FEP (with silicone core, approved for food)	A21	✓	✓	✓
• FFPM (Kalrez, compound 4079)	A22	✓	✓	✓
• NBR (Buna N)	A23	✓	✓	✓
plug				
• Han 7D (metal, gray)	A30	✓		
• Han 8U (instead of Han 7D)	A31	✓		
• Angled	A32	✓		
• Han 8D (metal, gray)	A33	✓		
Sealing screw ¼-18 NPT, with valve in mat. of process flanges	A40	✓	✓	✓
Cable sockets for M12 connectors (stainless steel)	A50	✓	✓	✓
Rating plate inscription (instead of German)				
• English	B11	✓	✓	✓
• French	B12	✓	✓	✓
• Spanish	B13	✓	✓	✓
• Italian	B14	✓	✓	✓
English rating plate Pressure units in inH_2O and/or psi	B21	✓	✓	✓
Quality inspection certificate (Five-step factory calibration) to IEC 60770-2[1]	C11	✓	✓	✓
Inspection certificate[2] Acc. to EN 10204-3.1	C12	✓	✓	✓
Factory certificate Acc. to EN 10204-2.2	C14	✓	✓	✓
Functional safety (SIL2) Devices suitable for use according to IEC 61508 and IEC 61511. Includes SIL conformity declaration	C20	✓		
Functional safety (PROFIsafe) Certificate and PROFIsafe protocol	C21[3]		✓	
Functional safety (SIL2/3) Devices suitable for use according to IEC 61508 and IEC 61511. Includes SIL conformity declaration	C23	✓		
Device passport Russia (For price request please contact the technical support www.siemens.com/automation/support-request)	C99	✓	✓	✓
Setting of upper limit of output signal to 22.0 mA	D05	✓		
Manufacturer's declaration acc. to NACE (MR 0103-2012 and MR 0175-2009) (only together with seal diaphragm made of Hastelloy and stainless steel)	D07	✓	✓	✓
Degree of protection IP65/IP68 (only for M20 x 1.5 and ½-14 NPT)	D12	✓	✓	✓
Supplied with oval flange (1 item), PTFE packing and screws in thread of process flange	D37	✓	✓	✓

Selection and Ordering data	Order code	HART	PA	FF
Further designs Add "-Z" to Article No. and specify Order code.				
Use in or on zone 1D/2D (only together with type of protection "Intrinsic safety" (transmitter 7MF4...-.....-.B.. Ex ia)")	E01	✓	✓	✓
Oxygen application (In the case of oxygen measurement and inert liquid max. 100 bar (1450 psi) at 60°C (140 °F))	E10	✓	✓	✓
Export approval Korea	E11	✓	✓	✓
CRN approval Canada (Canadian Registration Number)	E22	✓	✓	✓
Dual seal	E24	✓	✓	✓
Explosion-proof "Intrinsic safety" (Ex ia) to INMETRO (Brazil) (only for transmitter 7MF4...-.....-.B..)	E25[4]	✓	✓	✓
"Flameproof" explosion protection according to INMETRO (Brazil) (only for transmitter 7MF4...-.....-.D..)	E26[4]	✓	✓	✓
Explosion-proof "Intrinsic safety" (Ex ia + Ex d) to INMETRO (Brazil) (only for transmitter 7MF4...-.....-.P..)	E28[4]	✓	✓	
Ex Approval IEC Ex (Ex ia) (only for transmitter 7MF4...-.....-.B..)	E45[4]	✓	✓	✓
Ex Approval IEC Ex (Ex id) (only for transmitter 7MF4...-.....-.D..)	E46[4]	✓	✓	✓
Explosion-proof "Intrinsic safety" to NEPSI (China) (only for transmitter 7MF4...-.....-.B..)	E55[4]	✓	✓	✓
Explosion protection "Explosion-proof" to NEPSI (China) (only for transmitter 7MF4...-.....-.D..)	E56[4]	✓	✓	✓
Explosion-proof "Zone 2" to NEPSI (China) (only for transmitter 7MF4...-.....-.E..)	E57[4]	✓	✓	✓
"Intrinsic safety" and "Explosion-proof" explosion protection acc. to Kosha (Korea) (only for transmitter 7MF4...-.....-.[B, D]..-Z + E11)	E70[4]	✓	✓	✓
Two coats of lacquer on casing and cover (PU on epoxy)	G10	✓	✓	✓
Interchanging of process connection side	H01	✓	✓	✓
Vent on side for gas measurements	H02	✓	✓	✓
Transient protector 6 kV (lightning protection)	J01	✓	✓	✓
Process flange				
• Hastelloy	K01	✓	✓	✓
• Monel	K02	✓	✓	✓
• Stainless steel with PVDF insert max. PN 10 (MAWP 145 psi), max. temperature of medium 90 °C (194 °F) For ½-14 NPT inner process connection on the side in the middle of the process flange, vent valve not possible	K04	✓	✓	✓

1) When the manufacture's certificate (calibration certificate) has to be ordered for transmitters with diaphragm seals according to IEC 60770-2, it is recommended only to order this certificate exclusively with the diaphragm seals. The measuring accuracy of the total combination is certified here.

2) If the acceptance test certificate 3.1 is ordered for the transmitter with mounted diaphragm seals this certificate must also be ordered with the respective remote seals.

3) Profisafe transmitters can only be operated with the S7 F Systems V6.1 configuration software in combination with S7-400H

4) Option does not include ATEX approval, but instead includes only the country-specific approval.

© Siemens AG 2013

Selection and Ordering data	Order code	HART	PA	FF
Additional data				
Please add **"-Z"** to Article No. and specify Order code(s) and plain text.				
Measuring range to be set Specify in plain text (max. 5 characters): Y01: ... up to ... mbar, bar, kPa, MPa, psi	**Y01**	✓	✓[1]	
Stainless steel tag plate and entry in device variable (measuring point description) Max. 16 characters, specify in plain text: Y15:	**Y15**	✓	✓	✓
Measuring point text (entry in device variable) Max. 27 characters, specify in plain text: Y16:	**Y16**	✓	✓	✓
Entry of HART address (TAG) Max. 8 characters, specify in plain text: Y17:	**Y17**	✓		
Setting of pressure indication in pressure units Specify in plain text (standard setting: bar): Y21: mbar, bar, kPa, MPa, psi, ... Note: The following pressure units can be selected: bar, mbar, mm H_2O*), inH_2O*), ftH_2O*), mmHG, inHG, psi, Pa, kPa, MPa, g/cm^2, kg/cm^2, Torr, ATM or % *) ref. temperature 20 °C	**Y21**	✓	✓	✓
Setting of pressure indication in non-pressure units[2] Specify in plain text: Y22: ..... up to ..... l/min, m^3/h, m, USgpm, ... (specification of measuring range in pressure units "Y01" is essential, unit with max. 5 characters)	**Y22 + Y01**	✓		
Preset bus address possible between 1 and 126 Specify in plain text: Y25:	**Y25**		✓	✓
Damping adjustment in seconds (0 ... 100 s)	**Y30**	✓	✓	✓

Factory mounting of valve manifolds, see accessories.

Only Y01, Y15, Y16, Y17, Y21, Y22, Y25 and D05 can be factory preset

✓ = available

1) Measuring accuracies for PROFIBUS PA transmitters with Option Y01 are calculated in the same way as for HART devices.
2) Preset values can only be changed over SIMATIC PDM.

© Siemens AG 2013

Dimensional drawings

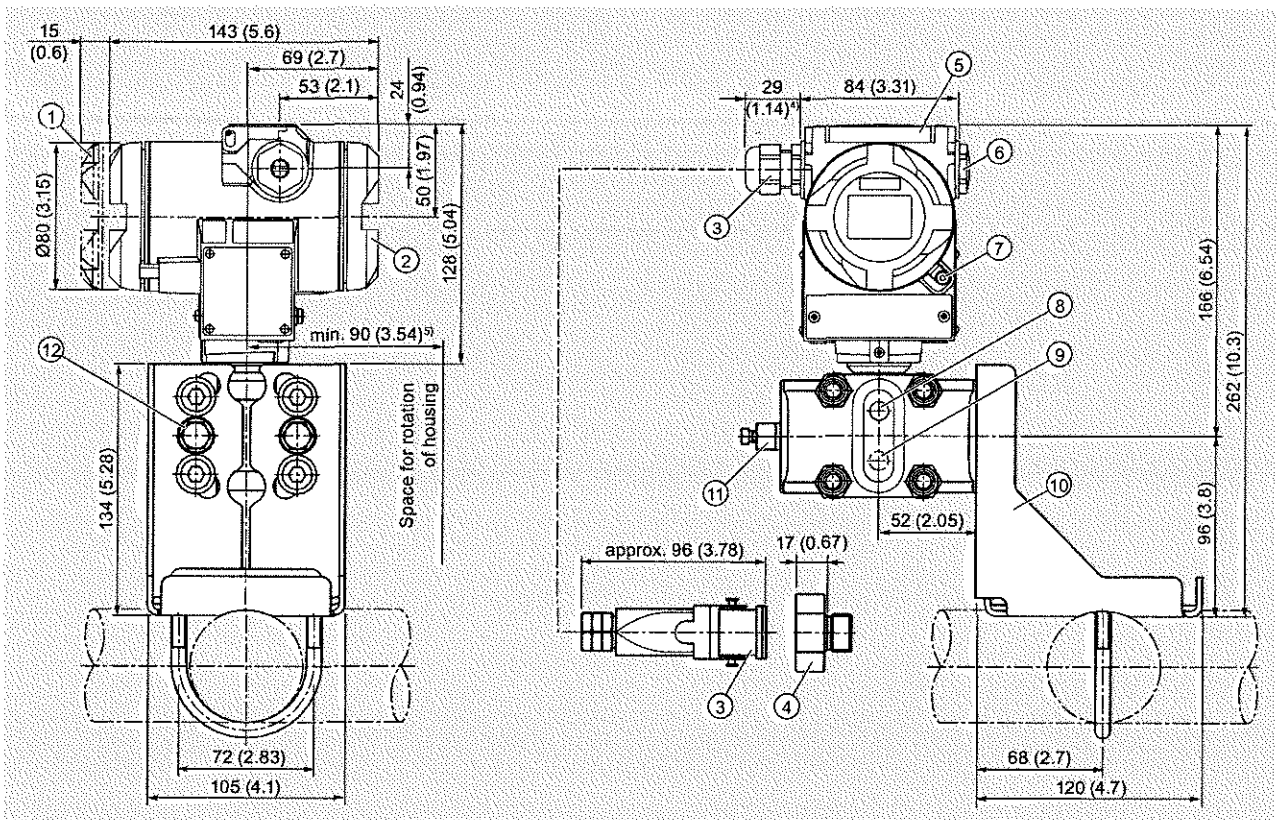

1. Electronic side, digital display (longer overall length for cover with window)[1]
2. Terminal side[1]
3. Electrical connection: Screwed gland Pg 13,5 (adapter)(Adapter)[2][3], Screwed gland M20 x 1,5 or Screwed gland ½-14 NPT or Han 7D/ Han 8D[2][3] plug
4. Harting adapter
5. Protective cover over keys
6. Blanking plug
7. Screw cover - safety bracket (only for type of protection "Explosion-proof enclosure", not shown in the drawing)
8. Lateral venting for liquid measurement (Standard)
9. Lateral venting for gas measurement (suffix H02)
10. Mounting bracket (option)
11. Sealing screw with valve (option)
12. Process connection: ¼-18 NPT (IEC 61518)

1) Allow approx. 20 mm (0.79 inch) thread length to permit unscrewing
2) Not with type of protection "Explosion-proof enclosure"
3) Not with type of protection "FM + CSA" [IS + XP]"
4) 92 mm (3.62 inch) for minimum distance to permit rotation with indicator
5) For Pg 13,5 with adapter approx. 45 mm (1.77 inch)

SITRANS P DS III pressure transmitters for absolute pressure, from the differential pressure series, dimensions in mm (inch)

© Siemens AG 2013

Technical specifications

SITRANS P, DS III for differential pressure and flow

	HART		PROFIBUS PA and FOUNDATION Fieldbus	
Input				
Measured variable	Differential pressure and flow			
Spans (infinitely adjustable) or nominal measuring range and max. permissible operating pressure	Span (min. ... max.)	Maximum operating pressure	Nominal measuring range	Maximum operating pressure
	1 ... 20 mbar (0.4 ... 8 inH_2O)	32 bar (464 psi)	20 mbar (8 inH_2O)	32 bar (464 psi)
	1 ... 60 mbar (0.4 ... 24 inH_2O)	160 bar (2320 psi)	60 mbar (24 inH_2O)	160 bar (2320 psi)
	2.5 ... 250 mbar (1 ... 100 inH_2O)		250 mbar (100 inH_2O)	
	6 ... 600 mbar (2.4 ... 240 inH_2O)		600 mbar (240 inH_2O)	
	16 ... 1600 mbar (6.4 ... 642 inH_2O)		1600 mbar (642 inH_2O)	
	50 ... 5000 mbar (20 ... 2000 inH_2O)		5 bar (2000 inH_2O)	
	0.3 ... 30 bar (4.35 ... 435 psi)		30 bar (435 psi)	
	2.5 ... 250 mbar (1 ... 100 inH_2O)	420 bar (6091 psi)	250 mbar (100 inH_2O)	420 bar (6091 psi)
	6 ... 600 mbar (2.4 ... 240 inH_2O)		600 mbar (240 inH_2O)	
	16 ... 1600 mbar (6.4 ... 642 inH_2O)		1600 mbar (642 inH_2O)	
	50 ... 5000 mbar (20 ... 2000 inH_2O)		5 bar (2000 inH_2O)	
	0.3 ... 30 bar (4.35 ... 435 psi)		30 bar (435 psi)	
Lower measuring limit				
• Measuring cell with silicone oil filling	-100 % of max. span or 30 mbar a (0.44 psia) (-33 % with 30 bar (435 psi) measuring cell)			
Upper measuring limit	100 % of max. span (for oxygen version and inert filling liquid; max. 120 bar (1740 psi))			
Output				
Output signal	4 ... 20 mA		Digital PROFIBUS PA and FOUNDATION Fieldbus signal	
• Lower limit (infinitely adjustable)	3.55 mA, factory preset to 3.84 mA		-	
• Upper limit (infinitely adjustable)	23 mA, factory preset to 20.5 mA or optionally set to 22.0 mA		-	
Load				
• Without HART	$R_B \leq (U_H - 10.5\ V)/0.023\ A$ in Ω U_H: Power supply in V		-	
• With HART	$R_B = 230 ... 500\ \Omega$ (SIMATIC PDM) or $R_B = 230 ... 1100\ \Omega$ (HART Communicator)		-	
Physical bus	-		IEC 61158-2	
Protection against polarity reversal	Protected against short-circuit and polarity reversal. Each connection against the other with max. supply voltage.			
Electrical damping (step width 0.1 s)	Set to 2 s (0 ... 100 s)			
Measuring accuracy	Acc. to IEC 60770-1			
Reference conditions (All error data refer always refer to the set span)	Increasing characteristic, start-of-scale value 0 bar, stainless steel seal diaphragm, silicone oil filling, room temperature 25 °C (77 °F)) r: Span ratio (r = max. span / set span)			
Error in measurement at limit setting incl. hysteresis and reproducibility				
• Linear characteristic			≤ 0.075 %	
- r ≤ 10	≤ (0.0029 · r + 0.071) %			
- 10 < r ≤ 30	≤ (0.0045 · r + 0.071) %			
- 30 < r ≤ 100	≤ (0.005 · r + 0.05) %			
• Square-rooted characteristic (flow > 50 %)			≤ 0.1 %	
- r ≤ 10	≤ 0.1 %			
- 10 < r ≤ 30	≤ 0.2 %			

© Siemens AG 2013

SITRANS P, DS III for differential pressure and flow	HART	PROFIBUS PA and FOUNDATION Fieldbus
• Square-rooted characteristic (flow > 25 ... 50 %)		≤ 0.2
- r ≤ 10	≤ 0.2 %	
- 10 < r ≤ 30	≤ 0.4 %	
Long-term stability (temperature change ± 30 °C (± 54 °F))	≤ (0.25 · r)% every 5 years static pressure max. 70 bar (1015 psi)	≤ 0.25 % every 5 years static pressure max. 70 bar (1015 psi)
• 20 mbar (0.29 psi)-measuring cell	≤ (0.2 · r) per year	≤ 0.2 per year
• 250, 600, 1600 and 5000 mbar (0.29, 0.87, 2.32 and 7.25 psi) -measuring cell	≤ (0.125 · r) per 5 years	≤ 0.125 per 5 years
Influence of ambient temperature		
• at -10 ... +60 °C (14 ... 140 °F)	≤ (0.08 · r + 0.1) %[1]	≤ 0.3 %
• at -40 ... -10 °C and 60 ... 85 °C (-40 ... +14 °F and 140 ... 185 °F)	≤ (0.1 · r + 0.15) %/10 K (Twice the value with 20-mbar (0.29 psi) measuring cell)	≤ 0.25 %/10 K
Influence of static pressure		
• on the zero point (PKN)	≤ (0.15 · r)% per 70 bar (1015 psi)	≤ 0.15 % per 70 bar (1015 psi)
- 20 mbar (0.29 psi)-measuring cell	≤ (0.15 · r)% per 32 bar (464 psi)	≤ 0.15 % per 32 bar (464 psi)
• on the span (PKS)	≤ 0.14 % per 70 bar (1015 psi)	-
- 20 mbar (0.29 psi)-measuring cell	≤ 0.2 % per 32 bar (464 psi)	-
Measured Value Resolution	-	$3 \cdot 10^{-5}$ of nominal measuring range
Rated conditions		
Degree of protection (to EN 60529)	IP65 (optional IP65/IP68)	
Temperature of medium		
• Measuring cell with silicone oil filling	-40 ... +100 °C (-40 ... +212 °F)	-20 ... +100 °C (-4 ... +212 °F) with 30 bar measuring cell
• Measuring cell with inert filling liquid	-20 ... +100 °C (-4 ... +212 °F)	
• In conjunction with dust explosion protection	-20 ... +60 °C (-4 ... +140 °F)	
Ambient conditions		
• Ambient temperature		
- Transmitter (with 4-wire connection, observe temperature values of supplementary 4-wire electronics)	-40 ... +85 °C (-40 ... +185 °F)	
- Display readable	-30 ... +85 °C (-22 ... +185 °F)	
• Storage temperature	-50 ... +85 °C (-58 ... +185 °F)	
• Climatic class		
- Condensation	Relative humidity 0 ... 100 % Condensation permissible, suitable for use in the tropics	
• Electromagnetic Compatibility		
- Emitted interference and interference immunity	Acc. to IEC 61326 and NAMUR NE 21	
Design		
Weight (without options)	≈ 4.5 kg (≈ 9.9 (lb)	
Enclosure material	Low-copper die-cast aluminum, GD-AlSi12 or stainless steel precision casting, mat. no. 1.4408	
Wetted parts materials		
• Seal diaphragm	Stainless steel, mat. no. 1.4404/316L or Hastelloy C276, mat. no. 2.4819, Monel, mat. no. 2.4360, tantalum or gold	
Measuring cell filling	Silicone oil or inert filling liquid (maximum value with oxygen measurement pressure 100 bar (1450 psi) at 60 °C (140 °F))	
Process connection	Female thread ¼-18 NPT and flange connection with mounting thread M10 to DIN 19213 or $^{7}/_{16}$-20 UNF to IEC 61518	
Material of mounting bracket		
• Steel	Sheet-steel, Mat. No. 1.0330, chrome-plated	
• Stainless steel	Sheet stainless steel, mat. no. 1.4301 (SS 304)	

© Siemens AG 2013

SITRANS P, DS III for differential pressure and flow	HART	PROFIBUS PA and FOUNDATION Fieldbus
Power supply U_H		Supplied through bus
Terminal voltage on transmitter	10.5 ... 45 V DC 10.5 ... 30 V DC in intrinsically-safe mode	-
Separate 24 V power supply necessary	-	No
Bus voltage		
• Not Ex	-	9 ... 32 V
• With intrinsically-safe operation	-	9 ... 24 V
Current consumption		
• Basic current (max.)	-	12.5 mA
• Start-up current ≤ basic current	-	Yes
• Max. current in event of fault	-	15.5 mA
Fault disconnection electronics (FDE) available	-	Yes
Certificates and approvals		
Classification according to PED 97/23/EC		
PN 32/160 (MAWP 464/2320 psi)	For gases of fluid group 1 and liquids of fluid group 1; complies with requirements of article 3, paragraph 3 (sound engineering practice)	
PN 420 (MAWP 6092 psi)	For gases of fluid group 1 and liquids of fluid group 1; complies with basic safety requirements of Article 3, paragraph 1 (appendix 1); assigned to category III, conformity evaluation module H by the TÜV Nord.	
Explosion protection		
• Intrinsic safety "i"	PTB 13 ATEX 2007 X	
- Marking	Ex II 1/2 G Ex ia/ib IIC T4/T5/T6 Ga/Gb	
- Permissible ambient temperature	-40 ... +85 °C (-40 ... +185 °F) temperature class T4; -40 ... +70 °C (-40 ... +158 °F) temperature class T5; -40 ... +60 °C (-40 ... +140 °F) temperature class T6	
- Connection	To certified intrinsically-safe circuits with peak values: U_i = 30 V, I_i = 100 mA, P_i = 750 mW, R_i = 300 Ω	FISCO supply unit: U_o = 17.5 V, I_o = 380 mA, P_o = 5.32 W Linear barrier: U_o = 24 V, I_o = 250 mA, P_o = 1.2 W
- Effective internal inductance/capacitance	L_i = 0.4 mH, C_i = 6 nF	L_i = 7 µH, C_i = 1.1 nF
• Explosion-proof "d"	PTB 99 ATEX 1160	
- Marking	Ex II 1/2 G Ex d IIC T4/T6 Gb	
- Permissible ambient temperature	-40 ... +85 °C (-40 ... +185 °F) temperature class T4; -40 ... +60 °C (-40 ... +140 °F) temperature class T6	
- Connection	To circuits with values: U_H = 10.5 ... 45 V DC	To circuits with values: U_H = 9 ... 32 V DC
• Dust explosion protection for zone 20	PTB 01 ATEX 2055	
- Marking	Ex II 1 D IP65 T 120 °C Ex II 1/2 D IP65 T 120 °C	
- Permissible ambient temperature	-40 ... +85 °C (-40 ... +185 °F)	
- Max. surface temperature	120 °C (248 °F)	
- Connection	To certified intrinsically-safe circuits with peak values: U_i = 30 V, I_i = 100 mA, P_i = 750 mW, R_i = 300 Ω	FISCO supply unit: U_o = 17.5 V, I_o = 380 mA, P_o = 5.32 W Linear barrier: U_o = 24 V, I_o = 250 mA, P_o = 1 W
- Effective internal inductance/capacitance	L_i = 0.4 mH, C_i = 6 nF	L_i = 7 µH, C_i = 1.1 nF
• Dust explosion protection for zone 21/22	PTB 01 ATEX 2055	
- Marking	Ex II 2 D IP65 T 120 °C	
- Connection	To circuits with values: U_H = 10.5 ... 45 V DC; P_{max} = 1.2 W	To circuits with values: U_H = 9 ... 32 V DC; P_{max} = 1 W

© Siemens AG 2013

SITRANS P, DS III for differential pressure and flow	HART	PROFIBUS PA and FOUNDATION Fieldbus
• Type of protection "n" (zone 2)	PTB 13 ATEX 2007 X	
- Marking	Ex II 2/3 G Ex nA II T4/T5/T6 Gc Ex II 2/3 G Ex ic IIC T4/T5/T6 Gc	
- Connection (Ex nA)	U_m = 45 V	U_m = 32 V
- Connection (Ex ic)	To circuits with values: U_i = 45 V	FISCO supply unit ic: U_o = 17.5 V, I_o = 570 mA Linear barrier: U_o = 32 V, I_o = 132 mA, P_o = 1 W
- Effective internal inductance/capacitance	L_i = 0.4 mH, C_i = 6 nF	L_i = 7 µH, C_i = 1.1 nF
• Explosion protection acc. to FM	Certificate of Compliance 3008490	
- Identification (XP/DIP) or (IS); (NI)	CL I, DIV 1, GP ABCD T4...T6; CL II, DIV 1, GP EFG; CL III; CL I, ZN 0/1 AEx ia IIC T4...T6; CL I, DIV 2, GP ABCD T4...T6; CL II, DIV 2, GP FG; CL III	
• Explosion protection to CSA	Certificate of Compliance 1153651	
- Identification (XP/DIP) or (IS)	CL I, DIV 1, GP ABCD T4...T6; CL II, DIV 1, GP EFG; CL III; Ex ia IIC T4...T6; CL I, DIV 2, GP ABCD T4...T6; CL II, DIV 2, GP FG; CL III	

1) Conversion of temperature error per 28 °C. Valid for temperature range -3 ... +53 °C < (0.064 . r + 0.08) % / 28 °C (50 °F).

© Siemens AG 2013

HART communication	
HART	230 ... 1100 Ω
Protocol	HART Version 5.x
Software for PC	SIMATIC PDM
PROFIBUS PA communication	
Simultaneous communication with master class 2 (max.)	4
The address can be set using	Configuration tool or local operation (standard setting address 126)
Cyclic data usage	
• Output byte	5 (one measured value) or 10 (two measured values)
• Input byte	0, 1, or 2 (register operating mode and reset function for metering)
Internal preprocessing	
Device profile	PROFIBUS PA Profile for Process Control Devices Version 3.0, Class B
Function blocks	2
• Analog input	
- Adaptation to customer-specific process variables	Yes, linearly rising or falling characteristic
- Electrical damping, adjustable	0 ... 100 s
- Simulation function	Input /Output
- Failure mode	parameterizable (last good value, substitute value, incorrect value)
- Limit monitoring	Yes, one upper and lower warning limit and one alarm limit respectively
• Register (totalizer)	Can be reset, preset, optional direction of counting, simulation function of register output
- Failure mode	parameterizable (summation with last good value, continuous summation, summation with incorrect value)
- Limit monitoring	One upper and lower warning limit and one alarm limit respectively
• Physical block	1
Transducer blocks	2
• Pressure transducer block	
- Can be calibrated by applying two pressures	Yes
- Monitoring of sensor limits	Yes
- Specification of a container characteristic with	Max. 30 nodes
- Square-rooted characteristic for flow measurement	Yes
- Gradual volume suppression and implementation point of square-root extraction	Parameterizable
- Simulation function for measured pressure value and sensor temperature	Constant value or over parameterizable ramp function

FOUNDATION Fieldbus communication	
Function blocks	3 function blocks analog input, 1 function block PID
• Analog input	
- Adaptation to customer-specific process variables	Yes, linearly rising or falling characteristic
- Electrical damping, adjustable	0 ... 100 s
- Simulation function	Output/input (can be locked within the device with a bridge)
- Failure mode	parameterizable (last good value, substitute value, incorrect value)
- Limit monitoring	Yes, one upper and lower warning limit and one alarm limit respectively
- Square-rooted characteristic for flow measurement	Yes
• PID	Standard FOUNDATION Fieldbus function block
• Physical block	1 resource block
Transducer blocks	1 transducer block Pressure with calibration, 1 transducer block LCD
• Pressure transducer block	
- Can be calibrated by applying two pressures	Yes
- Monitoring of sensor limits	Yes
- Simulation function: Measured pressure value, sensor temperature and electronics temperature	Constant value or over parameterizable ramp function

© Siemens AG 2013

1

Selection and Ordering data		Article No.
SITRANS P DS III with HART pressure transmitters for differential pressure and flow, PN 32/160 (MAWP 464/2320 psi)		**7MF4433-** ■■■■■-■■■■
Measuring cell filling	**Measuring cell cleaning**	
Silicone oil	normal ▶ ✱	1
Inert liquid[1]	grease-free to cleanliness level 2	3
Measuring span (min. ... max.)		
PN 32 (MAWP 464 psi)		
1 ... 20 mbar[2]	(0.4015 ... 8.03 inH_2O) ▶ ✱	B
PN 160 (MAWP 2320 psi)		
1 ... 60 mbar	(0.4015 ... 24.09 inH_2O) ▶ ✱	C
2,5 ... 250 mbar	(1.004 ... 100.4 inH_2O) ▶ ✱	D
6 ... 600 mbar	(2.409 ... 240.9 inH_2O) ▶ ✱	E
16 ... 1600 mbar	(6.424 ... 642.4 inH_2O) ▶ ✱	F
50 ... 5000 mbar	(20.08 ... 2008 inH_2O) ▶ ✱	G
0,3 ... 30 bar	(4.35 ... 435 psi) ▶ ✱	H
Wetted parts materials		
(stainless steel process flanges)		
Seal diaphragm	Parts of measuring cell	
Stainless steel	Stainless steel ▶ ✱	A
Hastelloy	Stainless steel	B
Hastelloy	Hastelloy	C
Tantalum[3]	Tantalum	E
Monel[3]	Monel	H
Gold[3]	Gold	L
Version for diaphragm seal[4) 5) 6) 7)]		Y
Process connection		
Female thread ¼-18 NPT with flange connection		
• Sealing screw opposite process connection		
- Mounting thread $^7/_{16}$-20 UNF to IEC 61518 ▶ ✱		2
- Mounting thread M10 to DIN 19213 (only for replacement requirement) ✱		0
• Vent on side of process flange [2]		
- Mounting thread $^7/_{16}$-20 UNF to IEC 61518		6
- Mounting thread M10 to DIN 19213 (only for replacement requirement)		4
Non-wetted parts materials		
process flange screws	Electronics housing	
Stainless steel	Die-cast aluminum ▶ ✱	2
Stainless steel	Stainless steel precision casting[8]	3
Version		
• Standard versions ✱		1
• International version, English label inscriptions, documentation in 5 languages on CD (no Order code selectable) ▶ ✱		2
Explosion protection		
• None ✱		A
• With ATEX, Type of protection:		
- "Intrinsic safety (Ex ia)" ✱		B
- "Explosion-proof (Ex d)"[9] ✱		D
- "Intrinsic safety and flameproof enclosure" (Ex ia + Ex d)"[10] ✱		P
- "Ex nA/ic (Zone 2)"[11] ✱		E
- "Intrinsic safety, explosion-proof enclosure and dust explosion protection (Ex ia+ Ex d + Zone 1D/2D)"[10] ▶ ✱		R
• FM + CSA intrinsic safe (is)		F
• FM + CSA (is + ep) + Ex ia + Ex d (ATEX)		S
• With FM + CSA, Type of protection:		
- "Intrinsic Safe und Explosion Proof (is + xp)"[9] ✱		NC

Selection and Ordering data	Article No.
SITRANS P DS III with HART pressure transmitters for differential pressure and flow, PN 32/160 (MAWP 464/2320 psi)	**7MF4433-** ■■■■■-■■■■
Electrical connection/cable entry	
• Screwed gland Pg 13.5[12]	A
• Screwed gland M20 x 1.5 ▶ ✱	B
• Screwed gland ½-14 NPT ✱	C
• Han 7D plug (plastic housing) incl. mating connector[12)13)]	D
• M12 connectors (stainless steel)[12) 14)]	F
Display	
• Without display ✱	0
• Without visible display (display concealed, setting: mA) ▶ ✱	1
• With visible display ✱	6
• with customer-specific display (setting as specified, Order code "Y21" or "Y22" required) ✱	7

▶ Available ex stock

✱ We can offer shorter delivery times for configurations designated with the Quick Ship Symbol ✱. For details see page 9/5 in the appendix.

Power supply units see Chap. 7 "Supplementary Components".

Included in delivery of the device:
- Brief instructions (Leporello)
- CD-ROM with detailed documentation
- Sealing plug(s) or sealing screw(s) for the process flanges(s)

1) For oxygen application, add Order code E10.

2) Not suitable for connection of remote seal. Position of the top vent valve in the process flange (see dimensional drawing).

3) Not in conjunction with max. span 20 and 60 mbar (8.03 und 24.09 inH_2O))

4) When the manufacture's certificate (calibration certificate) has to be ordered for transmitters with diaphragm seals according to IEC 60770-2, it is recommended only to order this certificate exclusively with the diaphragm seals. The measuring accuracy of the total combination is certified here.

5) If the acceptance test certificate 3.1.is ordered for the transmitter with mounted diaphragm seals this certificate must also be ordered with the respective remote seals.

6) The diaphragm seal is to be specified with a separate order number and must be included wiht the tranmitter order number, for example 7MF443.-..Y..-.... und 7MF4900-1...-.B

7) The standard measuring cell filling for configurations with remote seals (Y) is silicone oil.

8) Not in conjunction with Electrical connection "Screwed gland Pg 13.5" and "Han7D plug".

9) Without cable gland, with blanking plug

10) With enclosed cable gland Ex ia and blanking plug

11) Configurations with HAN and M12 connectors are only available in Ex ic.

12) Not in conjunction with types of protection "Explosion-proof" and "Ex nA", "Intrinsic safety" and "Explosion-proof".

13) Permissible only for crimp-contact of conductor cross-section 1 mm^2

14) M12 delivered without cable socket. Not available with protection type "Explosion-proof".

© Siemens AG 2013

Selection and Ordering data		Article No.		
Pressure transmitters for differential pressure and flow PN 32/160 (MAWP 464/2320 psi)				
SITRANS P DS III with PROFIBUS PA (PA)		**7MF4434-**		
SITRANS P DS III with FOUNDATION Fieldbus (FF)		**7MF4435-**		
		■■■■■-■■■■		
Measuring cell filling	**Measuring cell cleaning**			
Silicone oil	normal	1		
Inert liquid[1]	grease-free to cleanliness level 2	3		
Nominal measuring range				
PN 32 (MAWP 464 psi)				
20 mbar [2]	(8.03 inH_2O)	B		
PN 160 (MAWP 2320 psi)				
60 mbar	(24.09 inH_2O)	C		
250 mbar	(100.4 inH_2O)	D		
600 mbar	(240.9 inH_2O)	E		
1600 mbar	(642.4 inH_2O)	F		
5 bar	(2008 inH_2O)	G		
30 bar	(435 psi)	H		
Wetted parts materials				
(stainless steel process flanges)				
Seal diaphragm	Parts of measuring cell			
Stainless steel	Stainless steel	A		
Hastelloy	Stainless steel	B		
Hastelloy	Hastelloy	C		
Tantalum [3]	Tantalum	E		
Monel[3]	Monel	H		
Gold [3]	Gold	L		
Version as diaphragm seal [4) 5) 6) 7)]		Y		
Process connection				
Female thread ¼-18 NPT with flange connection				
• Sealing screw opposite process connection				
- Mounting thread $^7/_{16}$-20 UNF to IEC 61518			2	
- Mounting thread M10 to DIN 19213 (only for replacement requirement)			0	
• Venting on side of process flanges[2]				
- Mounting thread $^7/_{16}$-20 UNF to IEC 61518			6	
- Mounting thread M10 to DIN 19213 (only for replacement requirement)			4	
Non-wetted parts materials				
process flange screws	Electronics housing			
Stainless steel	Die-cast aluminum		2	
Stainless steel	Stainless steel precision casting		3	
Version				
• Standard versions				1
• International version, English label inscriptions, documentation in 5 languages on CD (no Order code selectable)				2
Explosion protection				
• None				A
• With ATEX, Type of protection:				
- "Intrinsic safety (Ex ia)"				B
- "Explosion-proof (Ex d)"[8]				D
- "Intrinsic safety and flameproof enclosure" (Ex ia + Ex d)"[9]				P
- "Ex nA/ic (Zone 2)" [10]				E
- "Intrinsic safety, explosion-proof enclosure and dust explosion protection (Ex ia + Ex d + Zone 1D/2D)"[9] (not for DS III FF)				R
• FM + CSA intrinsic safe (is)				F
• FM + CSA (is + ep) + Ex ia + Ex d (ATEX)				S
• With FM + CSA, Type of protection:				
- "Intrinsic Safe und Explosion Proof (is + xp)"[8]				NC

Selection and Ordering data	Article No.	
Pressure transmitters for differential pressure and flow PN 32/160 (MAWP 464/2320 psi)		
SITRANS P DS III with PROFIBUS PA (PA)	**7MF4434-**	
SITRANS P DS III with FOUNDATION Fieldbus (FF)	**7MF4435-**	
	■■■■■-■■■■	
Electrical connection/cable entry		
• Screwed gland M20 x 1.5		B
• Screwed gland ½-14 NPT		C
• M12 connectors (stainless steel)[11) 12) 13)]		F
Display		
• Without display		0
• Without visible display (display concealed, setting: bar)		1
• With visible display		6
• With customer-specific display (setting as specified, Order code "Y21" required)		7

Included in delivery of the device:
- Brief instructions (Leporello)
- CD-ROM with detailed documentation
- Sealing plug(s) or sealing screw(s) for the process flanges(s)

1) For oxygen application, add Order code E10.

2) Not suitable for connection of remote seal. Position of the top vent valve in the process flange (see dimensional drawing).

3) Not in conjunction with max. span 20 and 60 mbar (8.03 und 24.09 inH_2O))

4) When the manufacture's certificate (calibration certificate) has to be ordered for transmitters with diaphragm seals according to IEC 60770-2, it is recommended only to order this certificate exclusively with the diaphragm seals. The measuring accuracy of the total combination is certified here.

5) If the acceptance test certificate 3.1.is ordered for the transmitter with mounted diaphragm seals this certificate must also be ordered with the respective remote seals.

6) The diaphragm seal is to be specified with a separate order number and must be included wiht the tranmitter order number, for example 7MF443.-..Y..-.... und 7MF4900-1...-.B

7) The standard measuring cell filling for configurations with remote seals (Y) is silicone oil.

8) Without cable gland, with blanking plug.

9) With enclosed cable gland Ex ia and blanking plug.

10) Configurations with HAN and M12 connectors are only available in Ex ic.

11) M12 delivered without cable socket

12) Not available with protection type „Ex d" (options D, P, N and R)

13) Not in conjunction with types of protection "Explosion-proof" and "Ex nA", "Intrinsic safety" and "Explosion-proof".

© Siemens AG 2013

1

Selection and Ordering data	Order code	HART	PA	FF
Further designs Add "-Z" to Article No. and specify Order code.				
Pressure transmitter with mounting bracket (1x fixing angle, 2 x nut, 2 x U-washer or 1 x bracket, 2 x nut, 2 x U-washer) made of:				
• Steel	⊛ A01	✓	✓	✓
• Stainless steel	⊛ A02	✓	✓	✓
O-rings for process flanges (instead of FPM (Viton))				
• PTFE (Teflon)	⊛ A20	✓	✓	✓
• FEP (with silicone core, approved for food)	A21	✓	✓	✓
• FFPM (Kalrez, compound 4079)	A22	✓	✓	✓
• NBR (Buna N)	A23	✓	✓	✓
plug				
• Han 7D (metal, gray)	A30	✓		
• Han 8U (instead of Han 7D)	A31	✓		
• Angled	A32	✓		
• Han 8D (metal, gray)	A33	✓		
Sealing screws (2 unit(s) ¼-18 NPT, with valve in mat. of process flanges	⊛ A40	✓	✓	✓
Cable sockets for M12 connectors (stainless steel)	A50	✓	✓	✓
Rating plate inscription (instead of German)				
• English	⊛ B11	✓	✓	✓
• French	⊛ B12	✓	✓	✓
• Spanish	⊛ B13	✓	✓	✓
• Italian	⊛ B14	✓	✓	✓
English rating plate Pressure units in inH_2O and/or psi	⊛ B21	✓	✓	✓
Quality inspection certificate (Five-step factory calibration) to IEC 60770-2[1]	⊛ C11	✓	✓	✓
Inspection certificate[2] to EN 10204-3.1	⊛ C12	✓	✓	✓
Factory certificate to EN 10204-2.2	⊛ C14	✓	✓	✓
Functional safety (SIL2) Devices suitable for use according to IEC 61508 and IEC 61511. Includes SIL conformity declaration	⊛ C20	✓		
Functional safety (PROFIsafe) Certificate and PROFIsafe protocol	C21[5]		✓	
Functional safety (SIL2/3) Devices suitable for use according to IEC 61508 and IEC 61511. Includes SIL conformity declaration	⊛ C23	✓		
Device passport Russia (For price request please contact the technical support www.siemens.com/automation/support-request)	C99	✓	✓	✓
Setting of upper limit of output signal to 22.0 mA	D05	✓		
Manufacturer's declaration acc. to NACE (MR 0103-2012 and MR 0175-2009) (only together with seal diaphragm made of Hastelloy and stainless steel)	D07	✓	✓	✓
Degree of protection IP65/IP68 (only for M20 x 1.5 and ½-14 NPT)	D12	✓	✓	✓
Process flange screws made of Monel (max. nominal pressure PN20)	D34	✓	✓	✓
Supplied with oval flange set (2 items), PTFE packings and screws in thread of process flanges	D37	✓	✓	✓

Selection and Ordering data	Order code	HART	PA	FF
Further designs Add "-Z" to Article No. and specify Order code.				
Use in or on zone 1D/2D (only together with type of protection "Intrinsic safety" (transmitter 7MF4...-.....-.B.. Ex ia)")	E01	✓	✓	✓
TÜV approval to AD/TRD (only together with type of protection "Intrinsic safety (Ex ia)")	E06	✓		
Overfilling safety device for flammable and non-flammable liquids (max. PN 32 (MAWP 464 psi), basic device with type of protection "Intrinsic safety (Ex ia)", to WHG and VbF, not together with measuring cell filling "inert liquid")	E08	✓		
Oxygen application (In the case of oxygen measurement and inert liquid max. 100 bar (1450 psi) at 60°C (140 °F))	E10	✓	✓	✓
Export approval Korea	E11	✓	✓	✓
CRN approval Canada (Canadian Registration Number)	E22	✓	✓	✓
Dual seal	E24	✓	✓	✓
Explosion-proof "Intrinsic safety" (Ex ia) to INMETRO (Brazil) (only for transmitter 7MF4...-.....-.B..)	E25[4]	✓	✓	✓
"Flameproof" explosion protection according to INMETRO (Brazil) (only for transmitter 7MF4...-.....-.D..)	E26[4]	✓	✓	✓
Explosion-proof "Intrinsic safety" (Ex ia + Ex d) to INMETRO (Brazil) (only for transmitter 7MF4...-.....-.P..)	E28[4]	✓	✓	
Ex Approval IEC Ex (Ex ia) (only for transmitter 7MF4...-.....-.B..)	E45[4]	✓	✓	✓
Ex Approval IEC Ex (Ex id) (only for transmitter 7MF4...-.....-.D..)	E46[4]	✓	✓	✓
Explosion-proof "Intrinsic safety" to NEPSI (China) (only for transmitter 7MF4...-.....-.B..)	E55[4]	✓	✓	✓
Explosion protection "Explosion-proof" to NEPSI (China) (only for transmitter 7MF4...-.....-.D..)	E56[4]	✓	✓	✓
Explosion-proof "Zone 2" to NEPSI (China) (only for transmitter 7MF4...-.....-.E..)	E57[4]	✓	✓	✓
"Intrinsic safety" and "Explosion-proof" explosion protection acc. to Kosha (Korea) (only for transmitter 7MF4...-.....-.[B, D]..-Z + E11)	E70[4]	✓	✓	✓
Two coats of lacquer on casing and cover (PU on epoxy)	G10	✓	✓	✓
Interchanging of process connection side	H01	✓	✓	✓
Vent on side for gas measurements	H02	✓	✓	✓
Stainless steel process flanges for vertical differential pressure lines (not together with K01, K02 and K04)[3]	H03	✓	✓	✓

⊛ We can offer shorter delivery times for configurations designated with the Quick Ship Symbol ⊛. For details see page 9/5 in the appendix.

© Siemens AG 2013

Selection and Ordering data	Order code	HART	PA	FF
Further designs Add "-Z" to Article No. and specify Order code.				
Process flange				
• Hastelloy	K01	✓	✓	✓
• Monel	K02	✓	✓	✓
• Stainless steel with PVDF insert max. PN 10 (MAWP 145 psi), max. temperature of medium 90 °C (194 °F) For ½-14 NPT inner process connection on the side in the middle of the process flange, vent valve not possible	K04	✓	✓	✓

Factory mounting of valve manifolds, see accessories.

Supplementary electronics for 4-wire connection, see accessories.

✓ = available

1) When the manufacture's certificate (calibration certificate) has to be ordered for transmitters with diaphragm seals according to IEC 60770-2, it is recommended only to order this certificate exclusively with the diaphragm seals. The measuring accuracy of the total combination is certified here.

2) If the acceptance test certificate 3.1.is ordered for the transmitter with mounted diaphragm seals this certificate must also be ordered with the respective remote seals.

3) Not suitable for connection of remote seal

4) Option does not include ATEX approval, but instead includes only the country-specific approval.

5) Profisafe transmitters can only be operated with the S7 F Systems V6.1 configuration software in combination with S7-400H

Selection and Ordering data		Order code	HART	PA	FF
Additional data Please add "-Z" to Article No. and specify Order code(s) and plain text.					
Measuring range to be set Specify in plain text:					
• in the case of linear characteristic curve (max. 5 characters): Y01: ... up to ... mbar, bar, kPa, MPa, psi	✱	Y01	✓	✓[1]	
• in the case of square rooted characteristic (max. 5 characters): Y02: ... up to ... mbar, bar, kPa, MPa, psi	✱	Y02	✓		
Stainless steel tag plate and entry in device variable (measuring point description) Max. 16 characters, specify in plain text: Y15:	✱	Y15	✓	✓	✓
Measuring point text (entry in device variable) Max. 27 char., specify in plain text: Y16:	✱	Y16	✓	✓	✓
Entry of HART address (TAG) Max. 8 char., specify in plain text: Y17:	✱	Y17	✓		
Setting of pressure indicator in pressure units Specify in plain text (standard setting: bar): Y21: mbar, bar, kPa, MPa, psi, ... Note: The following pressure units can be selected: bar, mbar, mm H_2O*), inH_2O*), ftH_2O*), mmHG, inHG, psi, Pa, kPa, MPa, g/cm², kg/cm², Torr, ATM or % *) ref. temperature 20 °C	✱	Y21	✓	✓	✓
Setting of pressure indicator in non-pressure units[2] Specify in plain text: Y22: ..... up to ..... l/min, m³/h, m, USgpm, ... (specification of measuring range in pressure units "Y01" or "Y02" is essential, unit with max. 5 characters)	✱	Y22[3] + Y01 *or* Y02	✓		
Preset bus address possible between 1 and 126 Specify in plain text: Y25:		Y25		✓	✓
Damping adjustment in seconds (0 ... 100 s)		Y30	✓	✓	✓

✱ We can offer shorter delivery times for configurations designated with the Quick Ship Symbol ✱. For details see page 9/5 in the appendix.

Factory mounting of valve manifolds, see accessories.

Only Y01, Y15, Y16, Y17, Y21, Y22, Y25 und D05 can be factory preset

✓ = available

1) Measuring accuracies for PROFIBUS PA transmitters with Option Y01 are calculated in the same way as for HART devices.

2) Preset values can only be changed over SIMATIC PDM.

3) Not in conjunction with over-filling safety device for flammable and non-flammable liquids (Order code "E08")

© Siemens AG 2013

1

Selection and Ordering data		Article No.
SITRANS P DS III with HART pressure transmitters for differential pressure and flow, PN 420 (MAWP 6092 psi)		**7MF4533-** ■■■■■-■■■■
Measuring cell filling	**Measuring cell cleaning**	
Silicone oil	normal	1
Measuring span (min. ... max.)		
2.5 ... 250 mbar	(1.004 ... 100.4 inH_2O)	D
6 ... 600 mbar	(2.409 ... 240.9 inH_2O)	E
16 ... 1600 mbar	(6.424 ... 642.4 inH_2O)	F
50 ... 5000 mbar	(20.08 ... 2008 inH_2O)	G
0.3 ... 30 bar	(4.35 ... 435 psi)	H
Wetted parts materials (stainless steel process flanges)		
Seal diaphragm	Parts of measuring cell	
Stainless steel	Stainless steel	A
Hastelloy	Stainless steel	B
Gold[1]	Gold	L
Ausführung als Membrandruckmittler [2) 3) 4) 5)]		Y
Process connection		
Female thread ¼-18 NPT with flange connection		
• Sealing screw opposite process connection		
- Mounting thread $^7/_{16}$-20 UNF to IEC 61518		3
- Mounting thread M12 to DIN 19213 (only for replacement requirement)		1
• Venting on side of process flanges, location of vent valve at top of process flanges (see dimensional drawing)		
- Mounting thread $^7/_{16}$-20 UNF to IEC 61518		7
- Mounting thread M12 to DIN 19213 (only for replacement requirement)		5
Non-wetted parts materials		
process flange screws	Electronics housing	
Stainless steel	Die-cast aluminum	2
Stainless steel	Stainless steel precision casting[6)]	3
Version		
• Standard versions		1
• International version, English label inscriptions, documentation in 5 languages on CD (no Order code selectable)		2
Explosion protection		
• None		A
• With ATEX, Type of protection:		
- "Intrinsic safety (Ex ia)"		B
- "Explosion-proof (Ex d)"[7)]		D
- "Intrinsic safety and flameproof enclosure" (Ex ia + Ex d)"[8)]		P
- "Ex nA/ic (Zone 2)"[9)]		E
- "Intrinsic safety, explosion-proof enclosure and dust explosion protection (Ex ia+ Ex d + Zone 1D/2D)"[8)]		R
• FM + CSA intrinsic safe (is)		F
• FM + CSA (is + ep) + Ex ia + Ex d (ATEX)		S
• With FM + CSA, Type of protection:		
- "Intrinsic safety and explosion-proof (is + xp)" [7)], max PN 360		NC
Electrical connection/cable entry		
• Screwed gland Pg 13.5[10)]		A
• Screwed gland M20x1.5		B
• Screwed gland ½-14 NPT		C
• Han 7D plug (plastic housing) incl. mating connector[10)11)]		D
• M12 connectors (stainless steel)[12) 13) 14)]		F

Selection and Ordering data	Article No.
SITRANS P DS III with HART pressure transmitters for differential pressure and flow, PN 420 (MAWP 6092 psi)	**7MF4533-** ■■■■■-■■■■
Display	
• Without display	0
• Without visible display (display concealed, setting: mA)	1
• With visible display	6
• with customer-specific display (setting as specified, Order code "Y21" or "Y22" required)	7

Power supply units see Chap. 7 "Supplementary Components".

Scope of delivery: Pressure transmitter as ordered (Instruction Manual is extra ordering item)

1) Not in conjunction with max. span 600 mbar (240.9 inH_2O)

2) When the manufacture's certificate (calibration certificate) has to be ordered for transmitters with diaphragm seals according to IEC 60770-2, it is recommended only to order this certificate exclusively with the diaphragm seals. The measuring accuracy of the total combination is certified here.

3) If the acceptance test certificate 3.1.is ordered for the transmitter with mounted diaphragm seals this certificate must also be ordered with the respective remote seals.

4) The diaphragm seal is to be specified with a separate order number and must be included wiht the tranmitter order number, for example 7MF453.-..Y..-.... und 7MF4900-1....-.B

5) The standard measuring cell filling for configurations with remote seals (Y) is silicone oil.

6) Not in conjunction with Electrical connection "Screwed gland Pg 13.5" and "Han7D plug".

7) Without cable gland, with blanking plug

8) With enclosed cable gland Ex ia and blanking plug

9) Configurations with HAN and M12 connectors are only available in Ex ic.

10) Not in conjunction with types of protection "Explosion-proof" and "Ex nA", "Intrinsic safety" and "Explosion-proof".

11) Permissible only for crimp-contact of conductor cross-section 1 mm^2

12) M12 delivered without cable socket

13) Not available with protection type „Ex d" (options D, P, N and R)

14) Not in conjunction with types of protection "Explosion-proof" and "Ex nA", "Intrinsic safety" and "Explosion-proof".

© Siemens AG 2013

Selection and Ordering data		Article No.		
Pressure transmitters for differential pressure and flow, PN 420 (MAWP 6092 psi)				
SITRANS P DS III with PROFIBUS PA (PA)		**7MF4534-**		
SITRANS P DS III with FOUNDATION Fieldbus (FF)		**7MF4535-**		
		1■■■■-■■■■		
Nominal measuring range				
250 mbar	(100.4 inH_2O)	D		
600 mbar	(240.9 inH_2O)	E		
1600 mbar	(642.4 inH_2O)	F		
5 bar	(2008 inH_2O)	G		
30 bar	(435 psi)	H		
Wetted parts materials				
(stainless steel process flanges)				
Seal diaphragm	Parts of measuring cell			
Stainless steel	Stainless steel	A		
Hastelloy	Stainless steel	B		
Gold [1]	Gold	L		
Ausführung als Membrandruckmittler [2] [3] [4] [5]		Y		
Process connection				
Female thread ¼-18 NPT with flange connection				
• Sealing screw opposite process connection				
- Mounting thread $^7/_{16}$-20 UNF to IEC 61518		3		
- Mounting thread M12 to DIN 19213 (only for replacement requirement)		1		
• Venting on side of process flanges, location of vent valve at top of process flanges (see dimensional drawing).				
- Mounting thread $^7/_{16}$-20 UNF to IEC 61518		7		
- Mounting thread M12 to DIN 19213 (only for replacement requirement)		5		
Non-wetted parts materials				
Process flange screws	Electronics housing			
Stainless steel	Die-cast aluminum	2		
Stainless steel	Stainless steel precision casting	3		
Version				
• Standard versions			1	
• International version, English label inscriptions, documentation in 5 languages on CD (no Order code selectable)			2	
Explosion protection				
• None			A	
• With ATEX, Type of protection:				
- "Intrinsic safety (Ex ia)"			B	
- "Explosion-proof (Ex d)"[6]			D	
- "Intrinsic safety and flameproof enclosure" (Ex ia + Ex d)"[7]			P	
- "Ex nA/ic (Zone 2)" [8]			E	
- "Intrinsic safety, explosion-proof enclosure and dust explosion protection (Ex ia + Ex d + Zone 1D/2D)"[7] (not for DS III FF)			R	
• FM + CSA intrinsic safe (is)			F	
• FM + CSA (is + ep) + Ex ia + Ex d (ATEX)			S	
• With FM + CSA, Type of protection:				
- "Intrinsic safety and explosion-proof (is + xp)"[6], max PN 360			NC	
Electrical connection/cable entry				
• Screwed gland M20 x 1.5			B	
• Screwed gland ½-14 NPT			C	
• M12 connectors (stainless steel) [9] [10] [11]			F	

Selection and Ordering data		Article No.		
Pressure transmitters for differential pressure and flow, PN 420 (MAWP 6092 psi)				
SITRANS P DS III with PROFIBUS PA (PA)		**7MF4534-**		
SITRANS P DS III with FOUNDATION Fieldbus (FF)		**7MF4535-**		
		1■■■■-■■■■		
Display				
• Without (display hidden)				0
• Without visible display (display concealed, setting: bar)				1
• With visible display				6
• With customer-specific display (setting as specified, Order code "Y21" required)				7

Included in delivery of the device:
- Brief instructions (Leporello)
- CD-ROM with detailed documentation
- Sealing plug(s) or sealing screw(s) for the process flanges(s)

1) Not in conjunction with max. span 600 mbar (240.9 inH_2O)

2) When the manufacture's certificate (calibration certificate) has to be ordered for transmitters with diaphragm seals according to IEC 60770-2, it is recommended only to order this certificate exclusively with the diaphragm seals. The measuring accuracy of the total combination is certified here.

3) If the acceptance test certificate 3.1.is ordered for the transmitter with mounted diaphragm seals this certificate must also be ordered with the respective remote seals.

4) The diaphragm seal is to be specified with a separate order number and must be included wiht the tranmitter order number, for example 7MF453.-..Y..-.... und 7MF4900-1....-.B

5) The standard measuring cell filling for configurations with remote seals (Y) is silicone oil.

6) Without cable gland, with blanking plug.

7) With enclosed cable gland Ex ia and blanking plug.

8) Configurations with HAN and M12 connectors are only available in Ex ic.

9) M12 delivered without cable socket

10) Not available with protection type „Ex d" (options D, P, N and R)

11) Not in conjunction with types of protection "Explosion-proof" and "Ex nA", "Intrinsic safety" and "Explosion-proof".

© Siemens AG 2013

1

Selection and Ordering data	Order code	HART	PA	FF
Further designs Add "-Z" to Article No. and specify Order code.				
Pressure transmitter with mounting bracket (1x fixing angle, 2 x nut, 2 x U-washer or 1 x bracket, 2 x nut, 2 x U-washer) made of:				
• Steel	**A01**	✓	✓	✓
• Stainless steel	**A02**	✓	✓	✓
O-rings for process flanges (instead of FPM (Viton))				
• PTFE (Teflon)	**A20**	✓	✓	✓
• FEP (with silicone core, approved for food)	**A21**	✓	✓	✓
• FFPM (Kalrez, compound 4079)	**A22**	✓	✓	✓
• NBR (Buna N)	**A23**	✓	✓	✓
Plug				
• Han 7D (metal, gray)	**A30**	✓		
• Han 8U (instead of Han 7D)	**A31**	✓		
• Angled	**A32**	✓		
• Han 8D (metal, gray)	**A33**	✓		
Sealing screws (2 unit(s) ¼-18 NPT, with valve in mat. of process flanges	**A40**	✓	✓	✓
Cable sockets for M12 conn. (stainless steel)	**A50**	✓	✓	✓
Rating plate inscription (instead of German)				
• English	**B11**	✓	✓	✓
• French	**B12**	✓	✓	✓
• Spanish	**B13**	✓	✓	✓
• Italian	**B14**	✓	✓	✓
English rating plate Pressure units in inH_2O and/or psi	**B21**	✓	✓	✓
Quality inspection certificate (Five-step factory calibration) to IEC 60770-2	**C11**	✓	✓	✓
Inspection certificate Acc. to EN 10204-3.1	**C12**	✓	✓	✓
Factory certificate Acc. to EN 10204-2.2	**C14**	✓	✓	✓
Functional safety (SIL2) Devices suitable for use according to IEC 61508 and IEC 61511. Includes SIL conformity declaration	**C20**	✓		
Functional safety (PROFIsafe) Certificate and PROFIsafe protocol	**C21**[1]		✓	
Functional safety (SIL2/3) Devices suitable for use according to IEC 61508 and IEC 61511. Includes SIL conformity declaration	**C23**	✓		
Device passport Russia (For price request please contact the technical support www.siemens.com/automation/support-request)	**C99**	✓	✓	✓
Setting of upper limit of output signal to 22.0 mA	**D05**	✓		
Manufacturer's declaration acc. to NACE (MR 0103-2012 and MR 0175-2009) (only together with seal diaphragm made of Hastelloy and stainless steel)	**D07**	✓	✓	✓
Degree of protection IP65/IP68 (only for M20 x 1.5 and ½-14 NPT)	**D12**	✓	✓	✓
Nom. press. rating PN 500 (MAWP 7250 psi) (Only for measuring cell 600 mbar ... 30 bar (240 inH_2O ... 435 psi), SIL- und Ex-options not possible))[2]	**D56**	✓		

Selection and Ordering data	Order code	HART	PA	FF
Further designs Add "-Z" to Article No. and specify Order code.				
Use in or on zone 1D/2D (only together with type of protection "Intrinsic safety" (transmitter 7MF4...-.....-.B.. Ex ia)")	**E01**	✓	✓	✓
Export approval Korea	**E11**	✓	✓	✓
Dual seal	**E24**	✓	✓	✓
Explosion-proof "Intrinsic safety" (Ex ia) to INMETRO (Brazil) (only for transmitter 7MF4...-.....-.B..)	**E25**[3]	✓	✓	✓
"Flameproof" explosion protection according to INMETRO (Brazil) (only for transmitter 7MF4...-.....-.D..)	**E26**[3]	✓	✓	✓
Explosion-proof "Intrinsic safety" (Ex ia + Ex d) to INMETRO (Brazil) (only for transmitter 7MF4...-.....-.P..)	**E28**[3]	✓	✓	
Ex Approval IEC Ex (Ex ia) (only for transmitter 7MF4...-.....-.B..)	**E45**[3]	✓	✓	✓
Ex Approval IEC Ex (Ex id) (only for transmitter 7MF4...-.....-.D..)	**E46**[3]	✓	✓	✓
Explosion-proof "Intrinsic safety" to NEPSI (China) (only for transmitter 7MF4...-.....-.B..)	**E55**[3]	✓	✓	✓
Ex prot. "Explosion-proof" to NEPSI (China) (only for transmitter 7MF4...-.....-.D..)	**E56**[3]	✓	✓	✓
Explosion-proof "Zone 2" to NEPSI (China) (only for transmitter 7MF4...-.....-.E..)	**E57**[3]	✓	✓	✓
"Intrinsic safety" and "Explosion-proof" explosion protection acc. to Kosha (Korea) (only for transmitter 7MF4...-.....-.[B, D]..-Z + E11)	**E70**[3]	✓	✓	✓
Two coats of lacquer on casing and cover (PU on epoxy)	**G10**	✓	✓	✓
Interchanging of process connection side	**H01**	✓	✓	✓
Stainless steel process flanges for vertical differential pressure lines	**H03**	✓	✓	✓
Transient protector 6 kV (lightning protection)	**J01**	✓	✓	✓

1) Profisafe transmitters can only be operated with the S7 F Systems V6.1 configuration software in combination with S7-400H
2) Tested according to IEC 61010. Only for measuring materials of the group of fluids 2 in accordance with PED permissible. Not for use with dangerous media suitable.
3) Option does not include ATEX approval, but instead includes only the country-specific approval.

© Siemens AG 2013

Selection and Ordering data	Order code	HART	PA	FF
Additional data				
Please add **"-Z"** to Article No. and specify Order code(s) and plain text.				
Measuring range to be set				
Specify in plain text:				
• in the case of linear characteristic curve (max. 5 characters): Y01: ... up to ... mbar, bar, kPa, MPa, psi	**Y01**	✓	✓[1]	
• in the case of square rooted characteristic (max. 5 characters): Y02: ... up to ... mbar, bar, kPa, MPa, psi	**Y02**	✓		
Stainless steel tag plate and entry in device variable (measuring point description)	**Y15**	✓	✓	✓
Max. 16 characters, specify in plain text: Y15:				
Measuring point text (entry in device variable)	**Y16**	✓	✓	✓
Max. 27 char., specify in plain text: Y16:				
Entry of HART address (TAG)	**Y17**	✓		
Max. 8 char., specify in plain text: Y17:				
Setting of pressure indication in pressure units	**Y21**	✓	✓	✓
Specify in plain text (standard setting: bar): Y21: mbar, bar, kPa, MPa, psi, ...				
Note: The following pressure units can be selected: bar, mbar, mm H_2O*), inH_2O*), ftH_2O*), mmHG, inHG, psi, Pa, kPa, MPa, g/cm^2, kg/cm^2, Torr, ATM or % *) ref. temperature 20 °C				
Setting of pressure indication in non-pressure units[2]	**Y22 + Y01** *or* **Y02**	✓		
Specify in plain text: Y22: ..... up to ..... l/min, m^3/h, m, USgpm, ... (specification of measuring range in pressure units "Y01" or "Y02" is essential, unit with max. 5 characters)				
Preset bus address	**Y25**		✓	✓
possible between 1 and 126				
Specify in plain text: Y25:				
Damping adjustment in seconds (0 ... 100 s)	**Y30**	✓	✓	✓

Factory mounting of valve manifolds, see accessories.

Only Y01, Y15, Y16, Y17, Y21, Y22, Y25 and D05 can be factory preset.

✓ = available

[1] Measuring accuracies for PROFIBUS PA transmitters with Option Y01 are calculated in the same way as for HART devices.
[2] Preset values can only be changed over SIMATIC PDM.

© Siemens AG 2013

Dimensional drawings

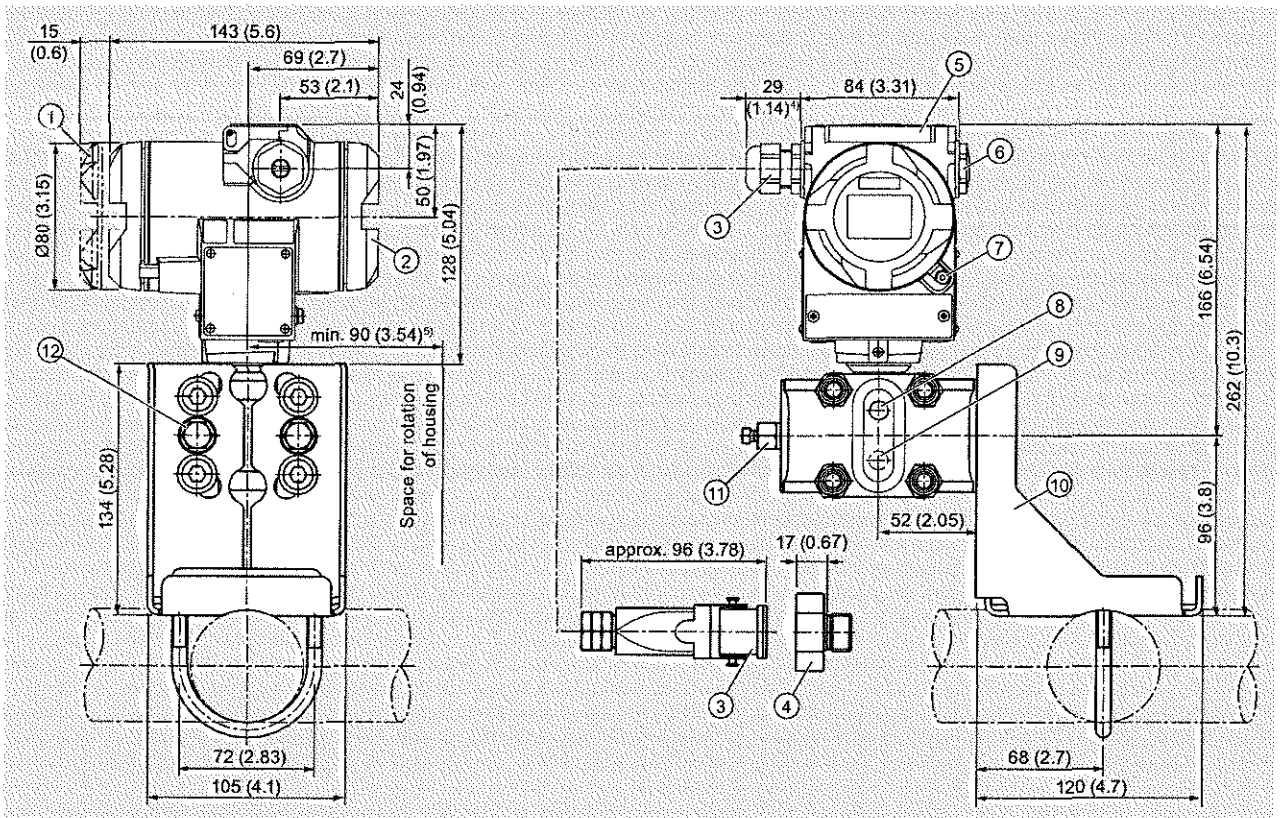

1. Electronic side, digital display (longer overall length for cover with window)[1]
2. Terminal side[1]
3. Electrical connection: Screwed gland Pg 13,5 (adapter)(Adapter)[2] [3], Screwed gland M20 x 1,5 or Screwed gland ½-14 NPT or Han 7D/ Han 8D[2] [3] plug
4. Harting adapter
5. Protective cover over keys
6. Blanking plug
7. Screw cover - safety bracket (only for type of protection "Explosion-proof enclosure", not shown in the drawing)
8. Lateral venting for liquid measurement (Standard)
9. Lateral venting for gas measurement (suffix H02)
10. Mounting bracket (option)
11. Sealing screw with valve (option)
12. Process connection: ¼-18 NPT (IEC 61518)

1) Allow approx. 20 mm (0.79 inch) thread length to permit unscrewing
2) Not with type of protection "Explosion-proof enclosure"
3) Not with type of protection "FM + CSA" [IS + XP]"
4) 92 mm (3.62 inch) for minimum distance to permit rotation with indicator
5) For Pg 13,5 with adapter approx. 45 mm (1.77 inch)

SITRANS P DS III pressure transmitters for differential pressure and flow, dimensions in mm (inch)

© Siemens AG 2013

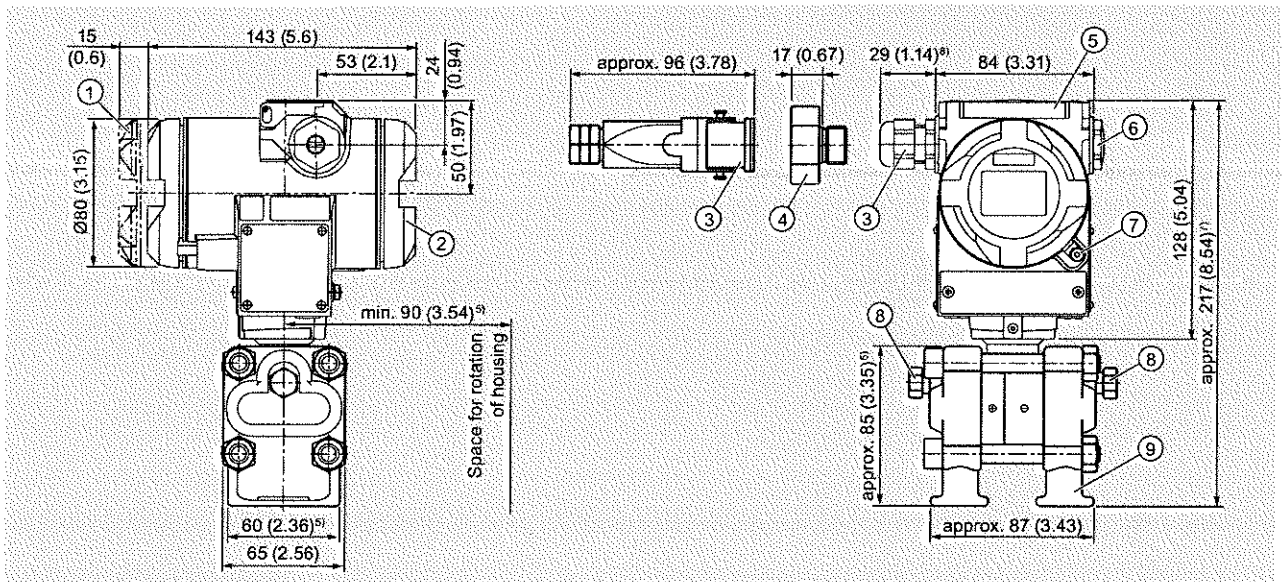

① Electronic side, digital display
(longer overall length for cover with window)[1]

② Terminal side[1]

③ Electrical connection:
Screwed gland Pg 13,5 (adapter)(Adapter)[2] [3]:
Screwed gland M20 x 1,5 or Screwed gland ½-14 NPT or
Han 7D/ Han 8D[2] [3] plug

④ Harting adapter

⑤ Protective cover over keys

⑥ Blanking plug

⑦ Screw cover - safety bracket (only for type of protection "Explosion-proof enclosure", not shown in the drawing)

⑧ Sealing screw with valve (option)

⑨ Process connection: ¼-18 NPT (IEC 61518)

1) Allow approx. 20 mm (0.79 inch) thread length to permit unscrewing
2) Not with type of protection "Explosion-proof enclosure"
3) Not with type of protection "FM + CSA" [IS + XP]"
4) 92 mm (3.6 inch) for minimum distance to permit rotation with indicator
5) 74 mm (2.9 inch) for PN ≥ 420 (MAWP ≥ 6092 psi)
6) 91 mm (3.6 inch) for PN ≥ 420 (MAWP ≥ 6092 psi)
7) 219 mm (8.62 inch) for PN ≥ 420 (MAWP ≥ 6092 psi)
8) For Pg 13,5 with adapter approx. 45 mm (1.77 inch)

SITRANS P DS III pressure transmitters for differential pressure and flow, with process covers for vertical differential pressure lines, optional "H03", dimensional drawing, dimensions in mm (inch)

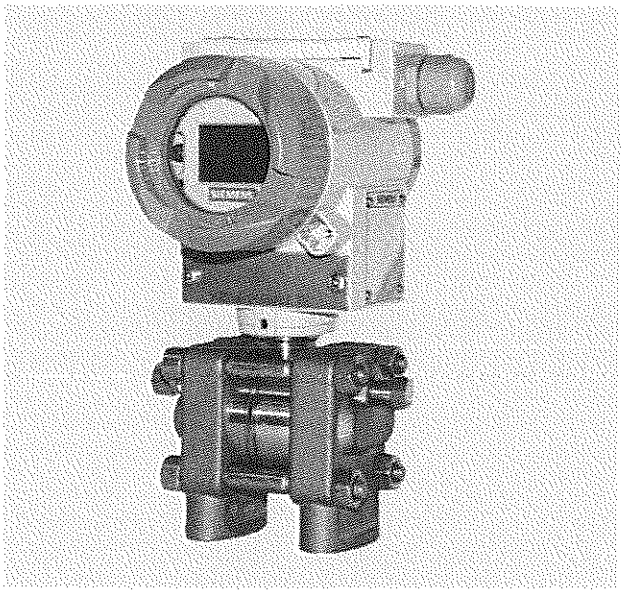

SITRANS P DS III pressure transmitters for differential pressure and flow, with process covers for vertical differential pressure lines

© Siemens AG 2013

Technical specifications

SITRANS P DS III for level	HART		PROFIBUS PA or FOUNDATION Fieldbus	
Input				
Measured variable	Level			
Spans (infinitely adjustable) or nominal measuring range and max. permissible operating pressure	Span (min. ... max.)	Maximum operating pressure	Nominal measuring range	Maximum operating pressure
	25 ... 250 mbar (10 ... 100 inH_2O)	See "Mounting flange"	250 mbar (100 inH_2O)	See "Mounting flange"
	25 ... 600 mbar (10 ... 240 inH_2O)	See "Mounting flange"	600 mbar (240 inH_2O)	See "Mounting flange"
	53 ... 1600 mbar (21 ... 642 inH_2O)	See "Mounting flange"	1600 mbar (642 inH_2O)	See "Mounting flange"
	160 ... 5000 mbar (64 ... 2000 inH_2O)	See "Mounting flange"	5 bar (2000 inH_2O)	See "Mounting flange"
Lower measuring limit				
• Measuring cell with silicone oil filling	-100 % of max. span or 500 mbar a (7.25 psia) Also available as vacuum-resistant remote seal: 30 mbar a (0.44 psi a)			
Upper measuring limit	100 % of max. span		100 % of the max. nominal measuring range	
Output				
Output signal	4 ... 20 mA		Digital PROFIBUS PA and FOUNDATION Fieldbus signal	
• Lower limit (infinitely adjustable)	3.55 mA, factory preset to 3.84 mA		-	
• Upper limit (infinitely adjustable)	23 mA, factory preset to 20.5 mA or optionally set to 22.0 mA		-	
Load				
• Without HART	$R_B \leq (U_H - 10.5\ V)/0.023\ A$ in Ω U_H: Power supply in V		-	
• With HART	R_B = 230 ... 500 Ω (SIMATIC PDM) or R_B = 230 ... 1100 Ω (HART Communicator)		-	
Physical bus	-		IEC 61158-2	
Protection against polarity reversal	Protected against short-circuit and polarity reversal. Each connection against the other with max. supply voltage.			
Electrical damping (step width 0.1 s)	Set to 2 s (0 ... 100 s)			
Measuring accuracy	Acc. to IEC 60770-1			
Reference conditions (All error data refer always refer to the set span)	Increasing characteristic, start-of-scale value 0 bar, stainless steel seal diaphragm, silicone oil filling, room temperature 25 °C (77 °F)) r: Span ratio (r = max. span / set span)			
Error in measurement at limit setting incl. hysteresis and reproducibility				
• Linear characteristic			≤ 0.15 %	
- r ≤ 10	≤ 0.15 %			
- 10 < r ≤ 30	≤ 0.3 %			
- 30 < r ≤ 100	≤ (0.0075 · r + 0.075) %			
Long-term stability (temperature change ± 30 °C (± 54 °F))	≤ (0.25 · r)% every 5 years static pressure max. 70 bar (1015 psi)		≤ 0.25 % every 5 years static pressure max. 70 bar (1015 psi)	
Influence of ambient temperature				
• at -10 ... +60 °C (14 ... 140 °F)				
- 250 mbar- (100 inH_2O)-measuring cell	≤ (0.5 · r + 0.2) %[1) 4)]		≤ 0.7 %	
- 600 mbar- (240 inH_2O)-measuring cell	≤ (0.3 · r + 0.2) %[2) 4)]		≤ 0.5 %	
- 1600 and 5000 mbar- (642 and 2000 inH_2O)-measuring cell	≤ (0.25 · r + 0.2) %[3) 4)]		< 0.45 %	
• at -40 ... -10 °C and 60 ... 85 °C (-40 ... +14 °F and 140 ... 185 °F)				
- 250 mbar- (100 inH_2O)-measuring cell	≤ (0.25 · r + 0.15) %/10 K doubled values at 10 < r ≤ 30		≤ 0.4 %/10 K	
- 600 mbar- (240 inH_2O)-measuring cell	≤ (0.15 · r + 0.15) %/10 K doubled values at 10 < r ≤ 30		≤ 0.3 %/10 K	
- 1600 and 5000 mbar- (642 and 2000 inH_2O)-measuring cell	≤ (0.12 · r + 0.15) %/10 K double values at 10 < r ≤ 30		≤ 0.27 %/10 K	

© Siemens AG 2013

SITRANS P DS III for level	HART	PROFIBUS PA or FOUNDATION Fieldbus
Influence of static pressure		
• on the zero point		
- 250 mbar- (100 inH_2O)-measuring cell	≤ (0.3 · r) % per nominal pressure	≤ 0.3 % per nominal pressure
- 600 mbar- (240 inH_2O)-measuring cell	≤ (0.15 · r) % per nominal pressure	≤ 0.15 % per nominal pressure
- 1600 and 5000 mbar- (642 and 2000 inH_2O)-measuring cell	≤ (0.1 · r) % per nominal pressure	≤ 0.1 % per nominal pressure
• on the span	≤ (0.1 · r) % per nominal pressure	≤ 0.1 % per nominal pressure
Measured Value Resolution	-	$3 \cdot 10^{-5}$ of nominal measuring range
Rated conditions		
Degree of protection to IEC 60529	IP65 (optional IP65/IP68)	
Temperature of medium	**Note:** Always take into account assignment of max. permissible operating temperature to max. permissible operating pressure of the respective flange connection!	
• Measuring cell with silicone oil filling	-40 ... +100[5)] °C (-40 ... +212[5)] °F)	
- High-pressure side	p_{abs} ≥ 1 bar: -40 ... +175 °C (-40 ... +347 °F) p_{abs} < 1 bar: -40 ... +80 °C (-40 ... +176 °F)	
- Low-pressure side	-40 ... +100 °C (-40 ... +212 °F) -20 ... +60 °C (-4 ... +140 °F) in conjunction with dust explosion protection	
Ambient conditions		
• Ambient temperature		
- Transmitter (with 4-wire connection, observe temperature values of supplementary 4-wire electronics)	-40 ... +85 °C (-40 ... +185 °F)	
- -Display readable	-30 ... +85 °C (-22 ... +185 °F)	
• Storage temperature	-50 ... +85 °C (-58 ... +185 °F)	
• Climatic class		
- Condensation	Relative humidity 0 ... 100 %, condensation permissible, suitable for use in the tropics	
• Electromagnetic Compatibility		
- Emitted interference and interference immunity	Acc. to IEC 61326 and NAMUR NE 21	
Design		
Weight (without options)		
• To EN (pressure transmitter with mounting flange, without tube)	≈ 11 ... 13 kg (≈ 24.2 ... 28.7 (lb)	
• To ASME (pressure transmitter with mounting flange, without tube)	≈ 11 ... 18 kg (≈ 24.2 ... 39.7 lb)	
Enclosure material	Low-copper die-cast aluminum, GD-AlSi12 or stainless steel precision casting, mat. no. 1.4408	
Wetted parts materials		
High-pressure side		
• Seal diaphragm of mounting flange	Stainless steel, mat. no. 1.4404/316L, Monel, mat. no. 2.4360, Hastelloy B2, mat. no. 2.4617, Hastelloy C276, mat. no. 2.4819, Hastelloy C4, mat. no. 2.4610, tantalum, PTFE, ETCFE, stainless steel Duplex, mat. no. 1.4462	
Measuring cell filling	Silicone oil	
Process connection		
• High-pressure side	Flange to EN and ASME	
• Low-pressure side	Female thread ¼-18 NPT and flange connection with mounting thread M10 to DIN 19213 or $^{7}/_{16}$-20 UNF to EN 61518	
Power supply U_H		Supplied through bus
Terminal voltage on transmitter	10.5 ... 45 V DC 10.5 ... 30 V DC in intrinsically-safe mode	-
Separate 24 V power supply necessary	-	No
Bus voltage		
• Not Ex	-	9 ... 32 V
• With intrinsically-safe operation	-	9 ... 24 V
Current consumption		
• Basic current (max.)	-	12.5 mA
• Start-up current ≤ basic current	-	Yes
• Max. current in event of fault	-	15.5 mA
Fault disconnection electronics (FDE) available	-	Yes

© Siemens AG 2013

SITRANS P DS III for level	HART	PROFIBUS PA or FOUNDATION Fieldbus
Certificates and approvals		
Classification according to PED 97/23/EC	For gases of fluid group 1 and liquids of fluid group 1; complies with requirements of article 3, paragraph 3 (sound engineering practice)	
Explosion protection		
• Intrinsic safety "i"	PTB 13 ATEX 2007 X	
- Marking	Ex II 1/2 G Ex ia/ib IIC T4/T5/T6 Ga/Gb	
- Permissible ambient temperature	-40 ... +85 °C (-40 ... +185 °F) temperature class T4; -40 ... +70 °C (-40 ... +158 °F) temperature class T5; -40 ... +60 °C (-40 ... +140 °F) temperature class T6	
- Connection	To certified intrinsically-safe circuits with peak values: U_i = 30 V, I_i = 100 mA, P_i = 750 mW; R_i = 300 Ω	FISCO supply unit: U_o = 17.5 V, I_o = 380 mA, P_o = 5.32 W Linear barrier: U_o = 24 V, I_o = 250 mA, P_o = 1.2 W
- Effective internal inductance/capacitance	L_i = 0.4 mH, C_i = 6 nF	L_i = 7 µH, C_i = 1.1 nF
• Explosion-proof "d"	PTB 99 ATEX 1160	
- Marking	Ex II 1/2 G Ex d IIC T4/T6 Gb	
- Permissible ambient temperature	-40 ... +85 °C (-40 ... +185 °F) temperature class T4; -40 ... +60 °C (-40 ... +140 °F) temperature class T6	
- Connection	To circuits with values: U_H = 10.5 ... 45 V DC	To circuits with values: U_H = 9 ... 32 V DC
• Dust explosion protection for zone 20	PTB 01 ATEX 2055	
- Marking	Ex II 1 D IP65 T 120 °C Ex II 1/2 D IP65 T 120 °C	
- Permissible ambient temperature	-40 ... +85 °C (-40 ... +185 °F)	
- Max. surface temperature	120 °C (248 °F)	
- Connection	To certified intrinsically-safe circuits with peak values: U_i = 30 V, I_i = 100 mA, P_i = 750 mW, R_i = 300 Ω	FISCO supply unit: U_o = 17.5 V, I_o = 380 mA, P_o = 5.32 W Linear barrier: U_o = 24 V, I_o = 250 mA, P_o = 1.2 W
- Effective internal inductance/capacitance	L_i = 0.4 mH, C_i = 6 nF	L_i = 7 µH, C_i = 1.1 nF
• Dust explosion protection for zone 21/22	PTB 01 ATEX 2055	
- Marking	Ex II 2 D IP65 T 120 °C	
- Connection	To circuits with values: U_H = 10.5 ... 45 V DC; P_{max} = 1.2 W	To circuits with values: U_H = 9 ... 32 V DC; P_{max} = 1 W
• Type of protection "n" (zone 2)	PTB 13 ATEX 2007 X	
- Marking	Ex II 2/3 G Ex nA II T4/T5/T6 Gc Ex II 2/3 G Ex ic IIC T4/T5/T6 Gc	
- Connection (Ex nA)	U_m = 45 V	U_m = 32 V
- Connection (Ex ic)	To circuits with values: U_i = 45 V	FISCO supply unit ic: U_o = 17.5 V, I_o = 570 mA Linear barrier: U_o = 32 V, I_o = 132 mA, P_o = 1 W
- Effective internal inductance/capacitance	L_i = 0.4 mH, C_i = 6 nF	L_i = 7 µH, C_i = 1,1 nF
• Explosion protection acc. to FM	Certificate of Compliance 3008490	
- Identification (XP/DIP) or (IS); (NI)	CL I, DIV 1, GP ABCD T4...T6; CL II, DIV 1, GP EFG; CL III; CL I, ZN 0/1 AEx ia IIC T4...T6; CL I, DIV 2, GP ABCD T4...T6; CL II, DIV 2, GP FG; CL III	
• Explosion protection to CSA	Certificate of Compliance 1153651	
- Identification (XP/DIP) or (IS)	CL I, DIV 1, GP ABCD T4...T6; CL II, DIV 1, GP EFG; CL III; Ex ia IIC T4...T6; CL I, DIV 2, GP ABCD T4...T6; CL II, DIV 2, GP FG; CL III	

1) Conversion of temperature error per 28 °C. Valid for temperature range -3 ... +53 °C < (0.4 · r + 0.16) % / 28 °C (50 °F).
2) Conversion of temperature error per 28 °C. Valid for temperature range -3 ... +53 °C < (0.24 · r + 0.16) % / 28 °C (50 °F).
3) Conversion of temperature error per 28 °C. Valid for temperature range -3 ... +53 °C < (0.2 · r + 0.16) % / 28 °C (50 °F).
4) 0.32 instead of 0.16 at 10 < r < 30
5) This value may be increased if the process connection is sufficiently insulated.

© Siemens AG 2013

HART communication	
HART	230 ... 1100 Ω
Protocol	HART Version 5.x
Software for computer	SIMATIC PDM
PROFIBUS PA communication	
Simultaneous communication with master class 2 (max.)	4
The address can be set using	Configuration tool or local operation (standard setting address 126)
Cyclic data usage	
• Output byte	5 (one measured value) or 10 (two measured values)
• Input byte	0, 1, or 2 (register operating mode and reset function for metering)
Internal preprocessing	
Device profile	PROFIBUS PA Profile for Process Control Devices Version 3.0, Class B
Function blocks	2
• Analog input	
- Adaptation to customer-specific process variables	Yes, linearly rising or falling characteristic
- Electrical damping, adjustable	0 ... 100 s
- Simulation function	Input/Output
- Failure mode	parameterizable (last good value, substitute value, incorrect value)
- Limit monitoring	Yes, one upper and lower warning limit and one alarm limit respectively
• Register (totalizer)	Can be reset, preset, optional direction of counting, simulation function of register output
- Failure mode	parameterizable (summation with last good value, continuous summation, summation with incorrect value)
- Limit monitoring	One upper and lower warning limit and one alarm limit respectively
• Physical block	1
Transducer blocks	2
• Pressure transducer block	
- Can be calibrated by applying two pressures	Yes
- Monitoring of sensor limits	Yes
- Specification of a container characteristic with	Max. 30 nodes
- Square-rooted characteristic for flow measurement	Yes
- Gradual volume suppression and implementation point of square-root extraction	Parameterizable
- Simulation function for measured pressure value and sensor temperature	Constant value or over parameterizable ramp function

FOUNDATION Fieldbus communication	
Function blocks	3 function blocks analog input, 1 function block PID
• Analog input	
- Adaptation to customer-specific process variables	Yes, linearly rising or falling characteristic
- Electrical damping, adjustable	0 ... 100 s
- Simulation function	Output/input (can be locked within the device with a bridge)
- Failure mode	parameterizable (last good value, substitute value, incorrect value)
- Limit monitoring	Yes, one upper and lower warning limit and one alarm limit respectively
- Square-rooted characteristic for flow measurement	Yes
• PID	Standard FOUNDATION Fieldbus function block
• Physical block	1 resource block
Transducer blocks	1 transducer block Pressure with calibration, 1 transducer block LCD
• Pressure transducer block	
- Can be calibrated by applying two pressures	Yes
- Monitoring of sensor limits	Yes
- Simulation function: Measured pressure value, sensor temperature and electronics temperature	Constant value or over parameterizable ramp function
Mounting flange	
Nominal diameter	Nominal pressure
• Acc. to EN 1092-1	
- DN 80	PN 40
- DN100	PN16, PN40
• To ASME B16.5	
- 3 inch	Class 150, class 300
- 4 inch	Class 150, class 300

© Siemens AG 2013

Selection and Ordering data		Article No.
Pressure transmitter for level, SITRANS P DS III with HART		**7MF4633-** ■■Y■■-■■■■
Measuring cell filling	**Measuring cell cleaning**	
Silicone oil	normal	1
Measuring span (min. ... max.)		
25 ... 250 mbar	(10 ... 100 inH_2O)	D
25 ... 600 mbar	(10 ... 240 inH_2O)	E
53 ... 1600 mbar	(21 ... 642 inH_2O)	F
0.16 ... 5 bar	(64.3 ... 2000 inH_2O)	G
Process connection of low-pressure side		
Female thread ¼-18 NPT with flange connection		
• Mounting thread $^7/_{16}$-20 UNF to IEC 61518		2
• Mounting thread M10 to DIN 19213 (only for replacement requirement)		0
Non-wetted parts materials		
process flange screws	Electronics housing	
Stainless steel	Die-cast aluminum	2
Stainless steel	Stainless steel precision casting[1]	3
Version		
• Standard versions		1
• International version, English label inscriptions, documentation in 5 languages on CD (no Order code selectable)		2
Explosion protection		
• None		A
• With ATEX, Type of protection:		
- "Intrinsic safety (Ex ia)"		B
- "Explosion-proof (Ex d)"[2]		D
- "Intrinsic safety and flameproof enclosure" (Ex ia + Ex d)"[3]		P
- "Ex nA/ic (Zone 2)" [4]		E
- "Intrinsic safety, explosion-proof enclosure and dust explosion protection (Ex ia+ Ex d + Zone 1D/2D)"[3]		R
• FM + CSA intrinsic safe (is)		F
• FM + CSA (is + ep) + Ex ia + Ex d (ATEX)		S
• With FM + CSA, Type of protection:		
- "Intrinsic Safe und Explosion Proof (is + xp)"[1]		NC
Electrical connection/cable entry		
• Screwed gland Pg 13.5[5]		A
• Screwed gland M20x1.5		B
• Screwed gland ½-14 NPT		C
• Han 7D plug (plastic housing) incl. mating connector[5]		D
• M12 connectors (stainless steel) [5] [6] [7]		F
Display		
• Without display		0
• Without visible display (display concealed, setting: mA)		1
• With visible display		6
• With customer-specific display (setting as specified, Order code "Y21" or "Y22" required)		7

Ordering information

1st order item: Pressure transmitter 7MF4633-...
2nd order item: Mounting flange 7MF4912-3...

ordering example

Item line 1:	7MF4633-1EY20-1AA1-Z
B line:	Y01
C line:	Y01: 80 to 143 mbar (1.16 to 2.1 psi)
Item line 2:	7MF4912-3GE01

Power supply units see Chap. 7 "Supplementary Components".

Included in delivery of the device:
- Brief instructions (Leporello)
- CD-ROM with detailed documentation
- Sealing plug(s) or sealing screw(s) for the process flanges(s)

1) Not in conjunction with electrical connection "Screwed gland Pg 13.5" and "Han7D plug".
2) Without cable gland, with blanking plug.
3) With enclosed cable gland Ex ia and blanking plug.
4) Configurations with HAN and M12 connectors are only available in Ex nL.
5) Not in conjunction with types of protection "Explosion-proof" and "Ex nA", "Intrinsic safety" and "Explosion-proof".
6) M12 delivered without cable socket
7) Not available with protection type „Ex d" (optiones D, P, N and R)

© Siemens AG 2013

Selection and Ordering data		Article No.				
Pressure transmitters for level						
SITRANS P DS III with PROFIBUS PA (PA)		7MF4634-				
SITRANS P DS III with FOUNDATION Fieldbus (FF)		7MF4635-				
		1■Y■■-■■■■				
Nominal measuring range						
250 mbar	(100 inH_2O)	D				
600 mbar	(240 inH_2O)	E				
1600 mbar	(642 inH_2O)	F				
5 bar	(2000 inH_2O)	G				
Process connection of low-pressure side						
Female thread ¼-18 NPT with flange connection						
• Mounting thread $^7/_{16}$-20 UNF to IEC 61518			2			
• Mounting thread M10 to DIN 19213 (only for replacement requirement)			0			
Non-wetted parts materials						
process flange screws	Electronics housing					
Stainless steel	Die-cast aluminum		2			
Stainless steel	Stainless steel precision casting		3			
Version						
• Standard versions				1		
• International version, English label inscriptions, documentation in 5 languages on CD (no Order code selectable)				2		
Explosion protection						
• None					A	
• With ATEX, Type of protection:						
- "Intrinsic safety (Ex ia)"					B	
- "Explosion-proof (Ex d)"[1]					D	
- "Intrinsic safety and flameproof enclosure" (Ex ia + Ex d)"[2]					P	
- "Ex nA/ic (Zone 2)"[3]					E	
- "Intrinsic safety, explosion-proof enclosure and dust explosion protection (Ex ia + Ex d + Zone 1D/2D)"[2] (not for DS III FF)					R	
• FM + CSA intrinsic safe (is)					F	
• FM + CSA (is + ep) + Ex ia + Ex d (ATEX)					S	
• With FM + CSA, Type of protection:						
- "Intrinsic Safe und Explosion Proof (is + xp)"[1]					NC	
Electrical connection/cable entry						
• Screwed gland M20 x 1.5					B	
• Screwed gland ½-14 NPT					C	
• M12 connectors (stainless steel)[4] [5]					F	
Display						
• Without display						0
• Without visible display (display concealed, setting: bar)						1
• With visible display						6
• With customer-specific display (setting as specified, Order code "Y21" required)						7

Ordering information

1st order item: Pressure transmitter 7MF4634-...
2nd order item: Mounting flange 7MF4912-...

ordering example

Item line 1: 7MF4634-1EY20-1AA1
Item line 2: 7MF4912-3GE01

Included in delivery of the device:
- Brief instructions (Leporello)
- CD-ROM with detailed documentation
- Sealing plug(s) or sealing screw(s) for the process flanges(s)

1) Without cable gland, with blanking plug.
2) With enclosed cable gland Ex ia and blanking plug.
3) Configurations with HAN and M12 connectors are only available in Ex nL.
4) M12 delivered without cable socket
5) Not in conjunction with types of protection "Explosion-proof" and "Ex nA", "Intrinsic safety" and "Explosion-proof".

© Siemens AG 2013

Selection and Ordering data	Order code	HART	PA	FF
Further designs				
Add "-Z" to Article No. and specify Order code.				
O-rings for process flanges on low-pressure side (instead of FPM (Viton))				
• PTFE (Teflon)	A20	✓	✓	✓
• FEP (with silicone core, approved for food)	A21	✓	✓	✓
• FFPM (Kalrez, compound 4079)	A22	✓	✓	✓
• NBR (Buna N)	A23	✓	✓	✓
Plug				
• Han 7D (metal, gray)	A30	✓		
• Han 8U (instead of Han 7D)	A31	✓		
• Angled	A32	✓		
• Han 8D (metal, gray)	A33	✓		
Sealing screw ¼-18 NPT, with valve in mat. of process flanges	A40	✓	✓	✓
Cable sockets for M12 connectors (stainless steel)	A50	✓	✓	✓
Rating plate inscription (instead of German)				
• English	B11	✓	✓	✓
• French	B12	✓	✓	✓
• Spanish	B13	✓	✓	✓
• Italian	B14	✓	✓	✓
English rating plate Pressure units in inH_2O and/or psi	B21	✓	✓	✓
Quality inspection certificate (Five-step factory calibration) to IEC 60770-2	C11	✓	✓	✓
Inspection certificate Acc. to EN 10204-3.1	C12	✓	✓	✓
Factory certificate Acc. to EN 10204-2.2	C14	✓	✓	✓
Functional safety (SIL2) Devices suitable for use according to IEC 61508 and IEC 61511. Includes SIL conformity declaration	C20	✓		
Functional safety (PROFIsafe) Certificate and PROFIsafe protocol	C21[1]		✓	
Functional safety (SIL2/3) Devices suitable for use according to IEC 61508 and IEC 61511. Includes SIL conformity declaration	C23	✓		
Device passport Russia (For price request please contact the technical support www.siemens.com/automation/support-request)	C99	✓	✓	✓
Setting of upper limit of output signal to 22.0 mA	D05	✓		
Degree of protection IP65/IP68 (only for M20x1.5 and ½-14 NPT)	D12	✓	✓	✓
Supplied with oval flange (1 item), PTFE packing and screws in thread of process flange	D37	✓	✓	✓

Selection and Ordering data	Order code	HART	PA	FF
Further designs				
Add "-Z" to Article No. and specify Order code.				
Use on zone 1D / 2D (only together with type of protection "Intrinsic safety" (transmitter 7MF4...-.....-.B.. Ex ia)")	E01	✓	✓	✓
Overfilling safety device for flammable and non-flammable liquids (max. PN 32 (MAWP 464 psi), basic device with type of protection "Intrinsic safety (Ex ia)", to WHG and VbF, not together with measuring cell filling "inert liquid")	E08	✓		
Export approval Korea	E11	✓	✓	✓
CRN approval Canada (Canadian Registration Number)	E22	✓	✓	✓
Dual seal	E24	✓	✓	✓
Explosion-proof "Intrinsic safety" (Ex ia) to INMETRO (Brazil) (only for transmitter 7MF4...-.....-.B..)	E25[2]	✓	✓	✓
"Flameproof" explosion protection according to INMETRO (Brazil) (only for transmitter 7MF4...-.....-.D..)	E26[2]	✓	✓	✓
Explosion-proof "Intrinsic safety" (Ex ia + Ex d) to INMETRO (Brazil) (only for transmitter 7MF4...-.....-.P..)	E28[2]	✓	✓	
Ex Approval IEC Ex (Ex ia) (only for transmitter 7MF4...-.....-.B..)	E45[2]	✓	✓	✓
Ex Approval IEC Ex (Ex id) (only for transmitter 7MF4...-.....-.D..)	E46[2]	✓	✓	✓
Explosion-proof "Intrinsic safety" to NEPSI (China) (only for transmitter 7MF4...-.....-.B..)	E55[2]	✓	✓	✓
Explosion protection "Explosion-proof" to NEPSI (China) (only for transmitter 7MF4...-.....-.D..)	E56[2]	✓	✓	✓
Ex protection "Zone 2" to NEPSI (China) (only for transmitter 7MF4...-.....-.E..)	E57[2]	✓	✓	✓
"Intrinsic safety" and "Explosion-proof" explosion protection acc. to Kosha (Korea) (only for transmitter 7MF4...-.....-.[B, D]..-Z + E11)	E70[2]	✓	✓	✓
Two coats of lacquer on casing and cover (PU on epoxy)	G10	✓	✓	✓
Replacement of process connection side	H01	✓	✓	✓
Transient protector 6 kV (lightning protection)	J01	✓	✓	✓

1) Profisafe transmitters can only be operated with the S7 F Systems V6.1 configuration software in combination with S7-400H
2) Option beinhaltet keine ATEX-Zulassung, sondern nur die landesspezifische Zulassung.

© Siemens AG 2013

Selection and Ordering data	Order code	HART	PA	FF
Additional data				
Please add "**-Z**" to Article No. and specify Order code(s) and plain text.				
Measuring range to be set Specify in plain text (max. 5 characters): Y01: ... up to ... mbar, bar, kPa, MPa, psi	**Y01**	✓	✓[1]	
Stainless steel tag plate and entry in device variable (measuring point description) Max. 16 characters, specify in plain text: Y15:	**Y15**	✓	✓	✓
Measuring point text (entry in device variable) Max. 27 characters, specify in plain text: Y16:	**Y16**	✓	✓	✓
Entry of HART address (TAG) Max. 8 characters, specify in plain text: Y17:	**Y17**	✓		
Setting of pressure indicator in pressure units Specify in plain text (standard setting: bar): Y21: mbar, bar, kPa, MPa, psi, ... Note: The following pressure units can be selected: bar, mbar, mm H_2O*), inH_2O*), ftH_2O*), mmHG, inHG, psi, Pa, kPa, MPa, g/cm^2, kg/cm^2, Torr, ATM or % *) ref. temperature 20 °C	**Y21**	✓	✓	✓
Setting of pressure indicator in non-pressure units[2] Specify in plain text: Y22: ..... up to ..... l/min, m^3/h, m, USgpm, ... (specification of measuring range in pressure units "**Y01**" is essential, unit with max. 5 characters)	**Y22[3] + Y01**	✓		
Preset bus address possible between 1 and 126 Specify in plain text: Y25:	**Y25**		✓	✓
Damping adjustment in seconds (0 ... 100 s)	**Y30**	✓	✓	✓

Only Y01, Y15, Y16, Y17, Y21, Y22, Y25 and D05 can be factory preset

✓ = available

1) Measuring accuracies for PROFIBUS PA transmitters with Option Y01 are calculated in the same way as for HART devices.
2) Preset values can only be changed over SIMATIC PDM.
3) Not in conjunction with over-filling safety device for flammable and non-flammable liquids (Order code "E08")

© Siemens AG 2013

Pressure Measurement
Transmitters for general requirements
SITRANS P DS III for level

1

Selection and Ordering data		Article No. Ord. code	
Mounting flange		7MF4912-	
Directly mounted on the SITRANS P pressure transmitter (converter part) for level, for DS III series		3 ■■■■	■■■
Connection to EN 1092-1			
Nominal diameter	**Nominal pressure**		
DN 50	PN 40	A	
	PN 100	B	
DN 80	PN 40	D	
DN 100	PN 16	G	
	PN 40	H	
Connection to ASME B16.5			
Nominal diameter	**Nominal pressure**		
2 inch	class 150	L	
	class 300	M	
	class 400/600	N	
	class 900/1500	P	
3 inch	Class 150	Q	
	Class 300	R	
4 inch	Class 150	T	
	Class 300	U	
Other version, add Order code and plain text: Nominal diameter: ...; Nominal press.: ...		Z	J1Y
Wetted parts materials			
• Stainless steel 316L		A	
- Coated with PFA		D	
- Coated with PTFE		E0	
• Coated with ECTFE[1]		F	
• Monel 400, mat. no. 2.4360		G	
• Hastelloy C276, mat. no. 2.4819		J	
• Hastelloy C4, mat. no. 2.4610		U	
• Tantalum		K	
• Duplex 2205, mat. no. 1.4462		Q	
• Duplex 2205, mat. no. 1.4462, incl. main body		R	
• Stainless steel 316L, gold plated, thickness approx. 25 µm		S0	
Tube length			
• None		0	
• 50 mm	(1.97 inch)	1	
• 100 mm	(3,94 inch)	2	
• 150 mm	(5.90 inch)	3	
• 200 mm	(7.87 inch)	4	
Other version: add Order code and plain text: material of parts in contact with medium: ....., tubus length:		Z8	K1Y
Filling liquid			
• Silicone oil M5		1	
• Silicone oil M50		2	
• High-temperature oil		3	
• Halocarbon oil (for O_2-measurement)		4	
• Glycerin/water[2]		6	
• Food oil (FDA-listed)		7	
Other version, add Order code and plain text: filling liquid: ...		9	M1Y

[1] For vacuum on request

[2] Not suitable for use in low-pressure range

Selection and Ordering data	Order code	HART	PA	FF
Further designs				
Add "-Z" to Article No. and specify Order code.				
Spark arrester For mounting on zone 0 (incl. documentation)	A01	✓	✓	✓
Remote seal nameplate attached out of stainless steel, contains Article No. and order number of the remote seal supplier	B20	✓	✓	✓
2.2 Certificate for oil-free and grease-free cleaning For inert filling liquid, not for operation with oxygen, Option E10 cannot be selected.	C10	✓	✓	✓
Quality inspection certificate (Five-step factory calibration) to IEC 60770-2	C11	✓	✓	✓
Inspection certificate Acc. to EN 10204-3.1	C12	✓	✓	✓
2.2 Certificate of FDA approval of fill oil Only in conjunction with filling liquid "Food oil" (FDA listed)"	C17	✓	✓	✓
"Functional safety (SIL2)" certificate to IEC 61508 (only for conjunction with the Order code "C20" in the case of SITRANS P DS III transmitter)	C20	✓	✓	
"Functional safety (SIL2/3)" certificate to IEC 61508 (only for conjunction with the Order code "C23" in the case of SITRANS P DS III transmitter)	C23	✓	✓	
Certification acc. to NACE MR-0175 Includes acceptance test certificate 3.1 acc. to EN 10204 (only for wetted parts made of stainless steel 1.4404/316L and Hastelloy C276)	D07	✓	✓	✓
Certification acc. to NACE MR-0103 Includes acceptance test certificate 3.1 acc. to EN 10204 (only for wetted parts made of stainless steel 1.4404/316L and Hastelloy C276)	D08	✓	✓	✓
Epoxy painting Not possible with vacuum-proof design Color: transparent, coverage: front and rear of the remote seal, capillary(ies) or connecting tube, process connection of the transmitter. With transmitters 7MF40.. and 7MF42.., only possible with process connection G½B according to EN837-1.	E15	✓	✓	✓
Sealing surface B1 or ASME B16.5 RF 125 ... 250 AA instead of sealing surface B2 or RFSF (only for wetted parts made of Hastelloy C276 (2.4819), tantalum and Duplex 2205 (1.4462) and for nominal sizes 2", 3", DN 50 and DN 80)	J12	✓	✓	✓
Sealing surface groove, EN 1092-1, form D instead of sealing surface B1 (only for wetted parts made of stainless steel 316L)	J14	✓	✓	✓
Sealing surface RJF (groove) ASME B16.5 instead of sealing surface ASME B16.5 RF 125 ... 250 AA (only for wetted parts made of stainless steel 316L)	J24	✓	✓	✓
Elongated pipe, 150 mm instead of 100 mm, max. medium temperature 250 °C, observe the maximum permissible media temperature of the filling liquid.	R15	✓	✓	✓
Elongated pipe, 200 mm instead of 100 mm, max. medium temperature 300 °C, observe the maximum permissible media temperature of the filling liquid.	R20	✓	✓	✓
Vacuum-proof design (for use in low-pressure range) Note: suffix "Y01" required with press. transm.	V04	✓	✓	✓

✓ = available

© Siemens AG 2013

Dimensional drawings

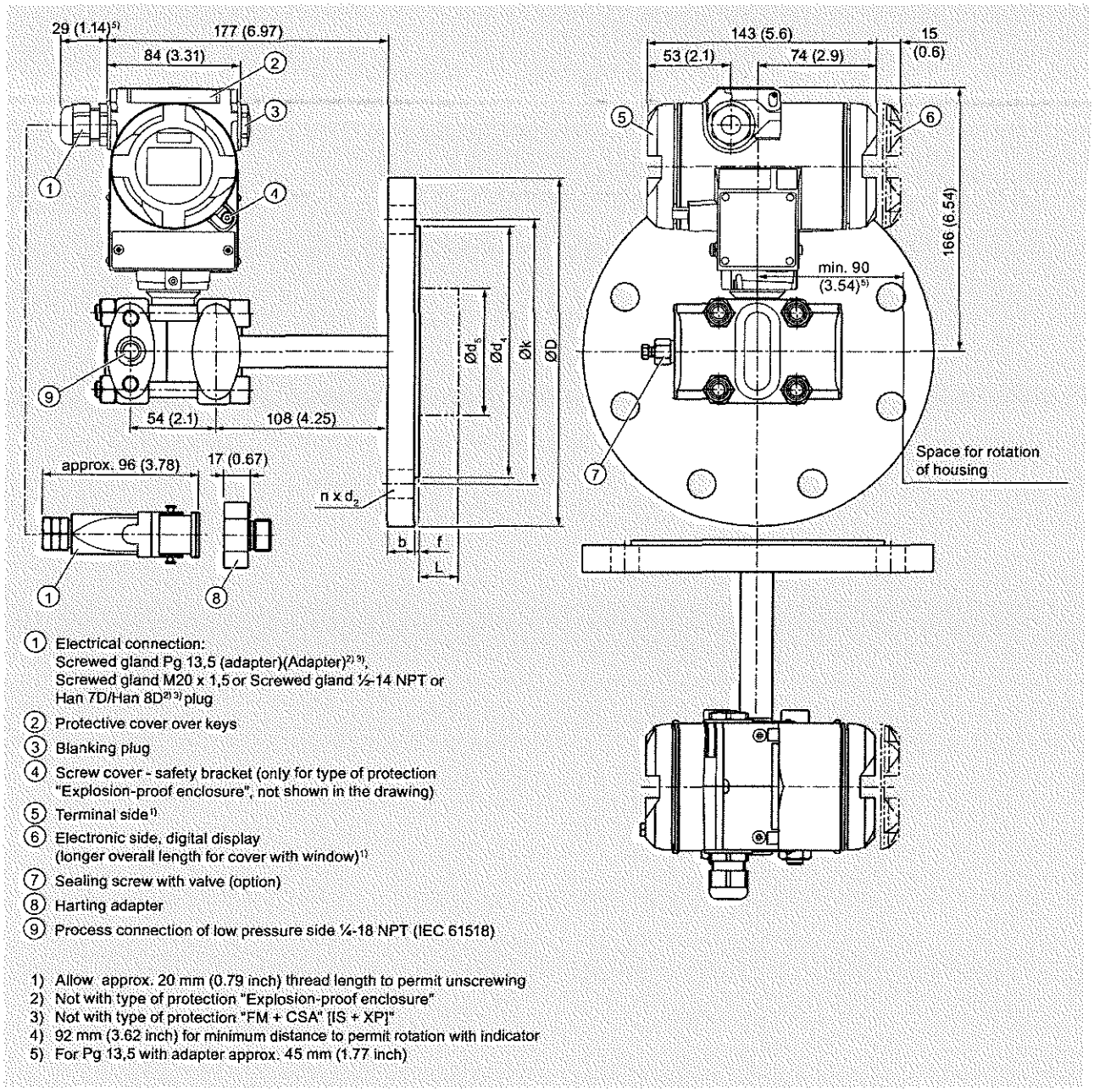

1. Electrical connection:
   Screwed gland Pg 13,5 (adapter)(Adapter)2) 5),
   Screwed gland M20 x 1,5 or Screwed gland ½-14 NPT or
   Han 7D/Han 8D2) 3) plug
2. Protective cover over keys
3. Blanking plug
4. Screw cover - safety bracket (only for type of protection "Explosion-proof enclosure", not shown in the drawing)
5. Terminal side1)
6. Electronic side, digital display
   (longer overall length for cover with window)1)
7. Sealing screw with valve (option)
8. Harting adapter
9. Process connection of low pressure side ¼-18 NPT (IEC 61518)

1) Allow approx. 20 mm (0.79 inch) thread length to permit unscrewing
2) Not with type of protection "Explosion-proof enclosure"
3) Not with type of protection "FM + CSA" [IS + XP]"
4) 92 mm (3.62 inch) for minimum distance to permit rotation with indicator
5) For Pg 13,5 with adapter approx. 45 mm (1.77 inch)

SITRANS P DS III with HART pressure transmitters for level, including mounting flange, dimensions in mm (inch)

© Siemens AG 2013

Connection to EN 1092-1

Nominal diameter	Nominal pressure	b	D	d	d_2	d_4	d_5	d_M	f	k	n	L
		mm	mm	mm	mm	mm	mm	mm	mm	mm	mm	mm
DN 50	PN 10/16/ 25/40	20	165	90	18	102	48.3	45[1]	2	125	8	0, 50, 100, 150 or 200
	PN 100	28	195	90	26	102	48.3	45[1]	2	145	8	
DN 80	PN 10/16/ 25/40	24	200	90	18	138	76	72[2]	2	160	8	
	PN 100	32	230	90	26	138	76	72[2]	2	180	8	
DN 100	PN 10/16	20	220	115	18	158	94	89	2	180	8	
	PN 25/40	24	235	115	22	162	94	89	2	190	8	

Connection to ASME B16.5

Nominal diameter	Nominal pressure	b	D	d_2	d_4	d_5	d_M	f	k	n	L
	lb./sq.in	inch (mm)	inch (mm)	inch (mm)	inch (mm)	inch (mm)	inch (mm)	inch (mm)	inch (mm)		inch (mm)
2 inch	150	0.77 (19.5)	5.91 (150)	0.79 (20)	3.62 (92)	1.9 (48.3)	1.77[1] (45)	0.08 (2)	4.74 (120.5)	4	0, 2, 3.94, 5.94 or 7.87 (0, 50, 100, 150 or 200)
	300	0.89 (22.7)	6.5 (165)	0.79 (20)	3.62 (92)	1.9 (48.3)	1.77[1] (45)	0.08 (2)	5 (127)	8	
	400/600	1.28 (32.4)	6.5 (165)	0.79 (20)	3.62 (92)	1.9 (48.3)	1.77[1] (45)	0.28 (7)	5 (127)	8	
	900/1500	1.78 (45.1)	8.46 (215)	1.02 (26)	5 (127)	1.9 (48.3)	1.77[1] (45)	0.28 (7)	6.5 (165)	8	
3 inch	150	0.96 (24.3)	7.48 (190)	0.79 (20)	5 (127)	3 (76)	2.83[2] (72)	0.08 (2)	6 (152.5)	4	
	300	1.14 (29)	8.27 (210)	0.87 (22)	5 (127)	3 (76)	2.83[2] (72)	0.08 (2)	6.63 (168.5)	8	
	600	1.53 (38.8)	8.27 (210)	0.87 (22)	5 (127)	3 (76)	2.83[2] (72)	0.28 (7)	6.63 (168.5)	8	
4 inch	150	0.96 (24.3)	9.06 (230)	0.79 (20)	6.22 (158)	3.69 (94)	3.5 (89)	0.08 (2)	7.5 (190.5)	8	
	300	1.27 (32.2)	10.04 (255)	0.87 (22)	6.22 (158)	3.69 (94)	3.5 (89)	0.08 (2)	7.87 (200)	8	
	400	1.65 (42)	10.04 (255)	1.02 (26)	6.22 (158)	3.69 (94)	3.5 (89)	0.28 (7)	7.87 (200)	8	

d: Internal diameter of gasket to DIN 2690
d_M: Effective diaphragm diameter
[1] 59 mm = 2.32 inch with tube length L=0.
[2] 89 mm = 3½ inch with tube length L=0.

© Siemens AG 2013

Overview

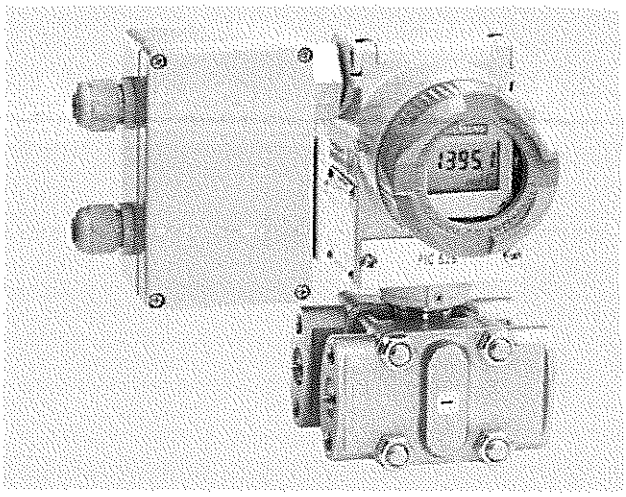

Direct connection of the supplementary electronics to a SITRANS P DS III pressure transmitter with HART produces a transmitter for 4-wire connection.

The supplementary electronics cannot be attached to explosion-protected pressure transmitters. The supplementary electronics is fitted in a light metal housing which is mounted on the left side of the pressure transmitter.

Note on ordering:

The supplementary electronics can only be ordered as an **optional accessory** for the corresponding pressure transmitter.

Technical specifications

SITRANS P, supplementary electronics for 4-wire connection	
Output	
Output signal	0 ... 20 mA or 4 ... 20 mA
Load	Max. 750 Ω
Voltage measurement	Linear (square-rooting in transmitter if necessary)
Electrical isolation	Between power supply and input/ output
Measuring accuracy	acc. to IEC 60770-1
Measurement deviation (in addition to transmitter)	≤ 0.15 % of set span
Influence of ambient temperature	≤ 0.1 % per 10 K
Power supply effect	≤ 0.1 % per 10 % change in voltage or frequency
Load effect	≤ 0.1 % per 100 % change
Rated conditions	
Ambient temperature	
• 24 V version	-20 ... +80 °C (-4 ... +176 °F)
• 230 V version	-20 ... +60 °C (-4 ... +140 °F)
Storage temperature	-50 ... +85 °C (-58 ... +185 °F)
Degree of protection	IP54 to IEC 60529
Electromagnetic compatibility (EMC)	IEC 61236
Condensation	Relative humidity 0 ... 95 % condensation permissible

Structural design	
Dimensions (W x H x D) in mm (inch)	80 x 120 x 60 (3.15 x 4.72 x 2.36)
Electrical connection	Screw terminals (Pg 13.5 cable inlet) or Han 7D / Han 8U plug
Power supply	
Supply voltage	230 V AC (-10 ... +6 %, 47 ... 63 Hz, approx. 6 VA) or 24 V AC/DC (24 V AC ± 10 %, 47 ... 63 Hz, approx. 3 VA)
Permissible ripple (within the specified limits)	Approx. 2.5 V_{pp}

Dimensional drawings

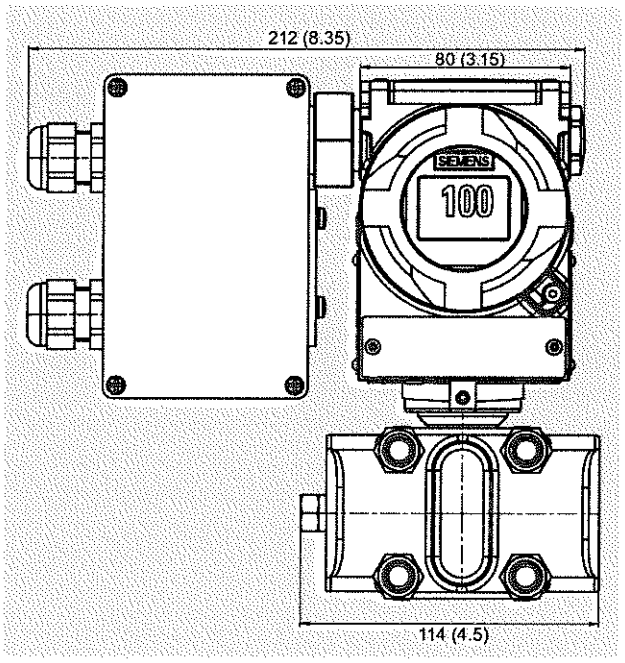

SITRANS P pressure transmitters with supplementary electronics for four-wire connection, dimension drawing, dimensions in mm

© Siemens AG 2013

1

Schematics

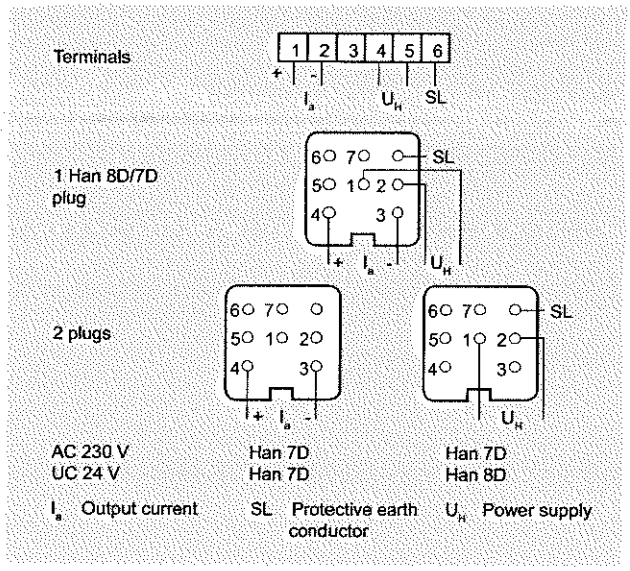

Supplementary electronics for 4-wire connection, connection diagram

Selection and Ordering data		Order code
Supplementary electronics for 4-wire connection Article No. of the transmitter **7MF4.33-.....-.AB.** add **"-Z"** and Order code.		**V** ■■
Power supply	**Electrical connection**	
24 V AC/DC	Terminals; 2 Pg screwed glands, to left	**1**
	2 Han 7D/Han 8U plugs incl. mating connector, to left	**3**
	1 Han 7D plug incl. mating connector, angled	**5**
	Terminals; 1 Pg screwed gland, downwards	**6**
	1 Han 8U plug incl. mating connector, downwards (observe arrangement of plug and differential pressure line)	**9**
230 V AC	Terminals; 2 Pg screwed glands, to left	**7**
	2 Han 7D plugs incl. mating connector, to left	**8**
Output current		
0 ... 20 mA		**0**
4 ... 20 mA		**1**
Accessories		
Instruction Manual German/English		**A5E00322799**

© Siemens AG 2013

Selection and Ordering data		Article No.
Replacement measuring cell for pressure for SITRANS P DS III		**7MF4990 - ■■■■0 - 0DB0**
Measuring cell filling	**Measuring cell cleaning**	
Silicone oil	Normal	1
Inert liquid	grease-free to cleanliness level 2	3
Measured span (min. ... max.)		
0.01 ... 1 bar	(0.15 ... 14.5 psi)	B
0.04 ... 4 bar	(0.6 ... 58 psi)	C
0.16 ... 16 bar	(2.32 ... 232 psi)	D
0.63 ... 63 bar	(9.14 ... 914 psi)	E
1.6 ... 160 bar	(23.2 ... 2320 psi)	F
4.0 ... 400 bar	(58.0 ... 5802 psi)	G
7.0 ... 700 bar	(102.0 ... 10153 psi)	J
Wetted parts materials		
Seal diaphragm	Process connection	
Stainless steel	Stainless steel	A
Hastelloy	Stainless steel	B
Hastelloy	Hastelloy	C
Process connection		
• Connection shank G½B to EN 837-1		0
• Female thread ½-14 NPT		1
• Oval flange made of stainless steel, max. span 160 bar (2320 psi)		
- Mounting thread $^{7}/_{16}$-20 UNF to IEC 61518		2
- Mounting thread M10 to DIN 19213		3
Further designs		Order code
Please add **"-Z"** to Article No. and specify Order code.		
Inspection certificate to EN 10204-3.1		**C12**

Selection and Ordering data		Article No.
Replacement measuring cell for absolute pressure for SITRANS P DS III (from the pressure series)		**7MF4992 - ■■■■0 - 0DB0**
Measuring cell filling	**Measuring cell cleaning**	
Silicone oil	Normal	1
Inert liquid	grease-free to cleanliness level 2	3
Measured span (min. ... max.)		
8.3 ... 250 mbar a	(0.12 ... 3.62 psia)	D
43 ... 1300 mbar a	(0.62 ... 18.85 psia)	F
0.16 ... 5 bar a	(2.32 ... 72.5 psia)	G
1 ... 30 bar a	(14.5 ... 435 psia)	H
Wetted parts materials		
Seal diaphragm	Process connection	
Stainless steel	Stainless steel	A
Hastelloy	Stainless steel	B
Hastelloy	Hastelloy	C
Process connection		
• Connection shank G½B to EN 837-1		0
• Female thread ½-14 NPT		1
• Oval flange made of stainless steel, max. span 160 bar (2320 psi)		
- Mounting thread $^{7}/_{16}$-20 UNF to IEC 61518		2
- Mounting thread M10 to DIN 19213		3
Further designs		Order code
Please add **"-Z"** to Article No. and specify Order code.		
Inspection certificate to EN 10204-3.1		**C12**

© Siemens AG 2013

Selection and Ordering data		Article No.
Replacement measuring cell for absolute pressure (from the differential pressure series) for SITRANS P DS III with HART, DS III with PROFIBUS PA and DS III with FOUNDATION Fieldbus series		**7MF4993 -** ■■■■■ **- 0DC0**
Measuring cell filling	**Measuring cell cleaning**	
Silicone oil	Normal	1
Inert liquid	grease-free to cleanliness level 2	3
Measured span (min. ... max.)		
8.3 ... 250 mbar a	(0.12 ... 3.62 psia)	D
43 ... 1300 mbar a	(0.62 ... 18.85 psia)	F
0.16 ... 5 bar a	(2.32 ... 72.5 psia)	G
1 ... 30 bar a	(14.5 ... 435 psia)	H
5.3 ... 100 bar a	(76.9 ... 1450 psia)	K E
Wetted parts materials		
Seal diaphragm	Parts of measuring cell	
Stainless steel	Stainless steel	A
Hastelloy	Stainless steel	B
Hastelloy	Hastelloy	C
Tantalum	Tantalum	E
Monel	Monel	H
Gold	Gold	L
Process connection		
Female thread ¼-18 NPT with flange connection		
• Sealing screw opposite process connection		
- Mounting thread M10 to DIN 19213		0
- Mounting thread $^7/_{16}$-20 UNF to IEC 61518		2
• Vent on side of process flange[1]		
- Mounting thread M10 to DIN 19213		4
- Mounting thread $^7/_{16}$-20 UNF to IEC 61518		6
Non-wetted parts materials		
• Stainless steel process flange screws		2
Further designs		Order code
Please add **"-Z"** to Article No. and specify Order code.		
O-rings for process flanges		
(instead of FPM (Viton))		
• PTFE (Teflon)		**A20**
• FEP (with silicone core, approved for food)		**A21**
• FFPM (Kalrez, compound 4079)		**A22**
• NBR (Buna N)		**A23**
Inspection certificate to EN 10204-3.1		**C12**
Process connection G½B		**D16**
Remote seal flanges (not together with K01, K02 and K04)		**D20**
Vent on side for gas measurements		**H02**
Process flanges		
• without		**K00**
• with process flange made of		
- Hastelloy		**K01**
- Monel		**K02**
- Stainless steel with PVDF insert max. PN 10 (MAWP 145 psi) max.temperature of medium 90 °C (194 °F) For ½-14 NPT inner process connection on the side in the middle of the process flange, vent valve not possible		**K04**

[1] Not for span "5.3 ... 100 bar (76.9 ... 1450 psi)"

Selection and Ordering data		Article No.
Replacement measuring cell for differential pressure and PN 32/160 (MAWP 464/2320 psi) for SITRANS P DS III with HART, DS III with PROFIBUS PA and DS III with FOUNDATION Fieldbus series		**7MF4994 -** ■■■■■ **- 0DC0**
Measuring cell filling	**Measuring cell cleaning**	
Silicone oil	Normal	1
Inert liquid	grease-free to cleanliness level 2	3
Measured span (min. ... max.)		
PN 32 (MAWP 464 psi)		
1 ... 20 mbar[1]	(0.4 ... 8 inH_2O)	B
PN 160 (MAWP 2320 psi)		
1 ... 60 mbar	(0.4 ... 24 inH_2O)	C
2.5 ... 250 mbar	(1 ... 100 inH_2O)	D
6 ... 600 mbar	(2.4 ... 240 inH_2O)	E
16 ... 1600 mbar	(6.4 ... 642 inH_2O)	F
50 ... 5000 mbar	(20 ... 2000 inH_2O)	G
0.3 ... 30 bar	(4.35 ... 435 psi)	H
Wetted parts materials		
(stainless steel process flanges)		
Seal diaphragm	Parts of measuring cell	
Stainless steel	Stainless steel	A
Hastelloy	Stainless steel	B
Hastelloy	Hastelloy	C
Tantalum[2]	Tantalum	E
Monel[2]	Monel	H
Gold[2]	Gold	L
Process connection		
Female thread ¼-18 NPT with flange connection		
• Sealing screw opposite process connection		
- Mounting thread M10 to DIN 19213		0
- Mounting thread $^7/_{16}$-20 UNF to IEC 61518		2
• Vent on side of process flange		
- Mounting thread M10 to DIN 19213		4
- Mounting thread $^7/_{16}$-20 UNF to IEC 61518		6
Non-wetted parts materials		
Stainless steel process flange screws		2
Further designs		Order code
Please add **"-Z"** to Article No. and specify Order code.		
O-rings for process flanges		
(instead of FPM (Viton))		
• PTFE (Teflon)		**A20**
• FEP (with silicone core, approved for food)		**A21**
• FFPM (Kalrez, compound 4079)		**A22**
• NBR (Buna N)		**A23**
Inspection certificate to EN 10204-3.1		**C12**
Remote seal flanges (not together with K01, K02 and K04)		**D20**
Vent on side for gas measurements		**H02**
Stainless steel process flanges for vertical differential pressure lines (not together with K01, K02 and K04)		**H03**
Process flanges		
• without		**K00**
• with process flange made of		
- Hastelloy		**K01**
- Monel		**K02**
- Stainless steel with PVDF insert max. PN 10 (MAWP 145 psi) max. temperature of medium 90 °C (194 °F) For ½-14 NPT inner process connection on the side in the middle of the process flange, vent valve not possible		**K04**

[1] Not suitable for connection of remote seal
[2] Only together with max. spans 250, 1600, 5000 and 30000 mbar (100 inH_2O, 642 inH_2O, 2000 inH_2O und 435 psi).

© Siemens AG 2013

Selection and Ordering data		Article No.
Replacement measuring cell for differential pressure and PN 420 (MAWP 6092 psi) for SITRANS P DS III with HART, DS III with PROFIBUS PA and DS III with FOUNDATION Fieldbus series		**7MF4995-** ■■■■■■-0DC0
Measuring cell filling	**Measuring cell cleaning**	
Silicone oil	Normal	1
Measured span (min. ... max.)		
2.5 ... 250 mbar	(1 ... 100 inH_2O)	D
6 ... 600 mbar	(2.4 ... 240 inH_2O)	E
16 ... 1600 mbar	(6.4 ... 642 inH_2O)	F
50 ... 5000 mbar	(20 ... 2000 inH_2O)	G
0.3 ... 30 bar	(4.35 ... 435 psi)	H
Wetted parts materials (stainless steel process flanges)		
Seal diaphragm	Parts of measuring cell	
Stainless steel	Stainless steel	A
Hastelloy	Stainless steel	B
Gold[1]	Gold	L
Process connection		
Female thread ¼-18 NPT with flange connection		
• Sealing screw opposite process connection		
- Mounting thread M12 to DIN 19213		1
- Mounting thread $^7/_{16}$-20 UNF to IEC 61518		3
• Vent on side of process flange		
- Mounting thread M12 to DIN 19213		5
- Mounting thread $^7/_{16}$-20 UNF to IEC 61518		7
Non-wetted parts materials		
• Stainless steel process flange screws		2
Further designs		Order code
Please add **"-Z"** to Article No. and specify Order code.		
O-rings for process flanges (instead of FPM (Viton))		
• PTFE (Teflon)		**A20**
• FEP (with silicone core, approved for food)		**A21**
• FFPM (Kalrez, compound 4079)		**A22**
• NBR (Buna N)		**A23**
Inspection certificate to EN 10204-3.1		**C12**
Stainless steel process flanges for vertical differential pressure lines		**H03**
without process flanges		**K00**

[1] Not together with max. span 600 mbar (240.9 inH_2O)

© Siemens AG 2013

1

Selection and Ordering data	Article No.
Spare parts/Accessories	
Mounting bracket and fastening parts for pressure transmitters SITRANS P DS III with HART, DS III with PROFIBUS PA and DS III with FOUNDATION Fieldbus (7MF403.-.....-..C.) For absolute pressure transmitters SITRANS P DS III with HART, DS III with PROFIBUS PA and DS III with FOUNDATION Fieldbus (7MF423.-.....-..C.)	
• made of steel	**7MF4997-1AB**
• made of stainless steel	**7MF4997-1AH**
Mounting bracket and fastening parts for pressure transmitters SITRANS P DS III with HART, DS III with PROFIBUS PA and DS III with FOUNDATION Fieldbus (7MF403-.....-..A., -..B., ..D. and ..F.) For absolute pressure transmitters SITRANS P DS III with HART, DS III with PROFIBUS PA and DS III with FOUNDATION Fieldbus 7MF423-.....-..A., -..B., ..D. and ..F.)	
• made of steel	**7MF4997-1AC**
• made of stainless steel ▶	**7MF4997-1AJ**
Mounting and fastening brackets For differential pressure transmitters with flange thread M10 SITRANS P DS III with HART, DS III with PROFIBUS PA and DS III with FOUNDATION Fieldbus (7MF433.-... and 7MF443.-...)	
• made of steel	**7MF4997-1AD**
• made of stainless steel ▶	**7MF4997-1AK**
Mounting and fastening brackets For differential pressure transmitters with flange thread M12 SITRANS P DS III with HART, DS III with PROFIBUS PA and DS III with FOUNDATION Fieldbus (7MF453.-...)	
• made of steel	**7MF4997-1AE**
• made of stainless steel	**7MF4997-1AL**
Mounting and fastening brackets For differential and absolute pressure transmitters with flange thread 7/16 -20 UNF SITRANS P DS III with HART, DS III with PROFIBUS PA and DS III with FOUNDATION Fieldbus (7MF433.-..., 7MF443.-... and 7MF453.-...)	
• made of steel	**7MF4997-1AF**
• made of stainless steel	**7MF4997-1AM**
Cover made of die-cast aluminum, including gasket, for SITRANS P DS III with HART, DS III with PROFIBUS PA and DS III with FOUNDATION Fieldbus	
• without window	**7MF4997-1BB**
• with window ▶	**7MF4997-1BE**
Cover made of stainless steel, including gasket, for SITRANS P DS III with HART, DS III with PROFIBUS PA and DS III with FOUNDATION Fieldbus	
• without window	**7MF4997-1BC**
• with window	**7MF4997-1BF**
Digital indicator Including mounting material for SITRANS P DS III with HART, DS III with PROFIBUS PA and DS III with FOUNDATION Fieldbus	**7MF4997-1BR**
Measuring point label	
• without inscription (5 units)	**7MF4997-1CA**
• Printed (1 unit) Data according to Y01 or Y02, Y15, Y16 and Y99 (see "Pressure transmitters")	**7MF4997-1CB-Z** **Y..: .....**

Selection and Ordering data	Article No.
Mounting screws For measuring point label, grounding and connection terminals or for display (50 units)	**7MF4997-1CD**
Sealing screws (1 set = 2 units) for process flange	
• made of stainless steel	**7MF4997-1CG**
• made of Hastelloy	**7MF4997-1CH**
Sealing screws with vent valve Complete (1 set = 2 units)	
• made of stainless steel ▶	**7MF4997-1CP**
• made of Hastelloy	**7MF4997-1CQ**
Electronics	
• for SITRANS P DS III with HART	**7MF4997-1DK**
• for SITRANS P DS III with PROFIBUS PA	**7MF4997-1DL**
• for SITRANS P DS III with FOUNDATION Fieldbus	**7MF4997-1DM**
Connection board	
• for SITRANS P DS III	**7MF4997-1DN**
• for SITRANS P DS III PROFIBUS PA and FOUNDATION Fieldbus	**7MF4997-1DP**
O-rings for process flanges made of:	
• FPM (Viton)	**7MF4997-2DA**
• PTFE (Teflon)	**7MF4997-2DB**
• FEP (with silicone core, approved for food)	**7MF4997-2DC**
• FFPM (Kalrez, compound 4079)	**7MF4997-2DD**
• NBR (Buna N)	**7MF4997-2DE**
Sealing ring for process connection	**see "Fittings"**
Weldable sockets for PMC connection	
• PMC Style Standard: Thread 1½"	**7MF4997-2HA**
• PMC Style Minibolt: front-flush 1"	**7MF4997-2HB**
Gaskets for PMC connection (packing unit = 5 units)	
• PTFE seal for PMC Style Standard: Thread 1½"	**7MF4997-2HC**
• Gasket made of Viton for PMC Style Minibolt: front-flush 1"	**7MF4997-2HD**
Weldable socket for TG52/50 and TG52/150 connection	
• TG52/50 connection	**7MF4997-2HE**
• TG52/150 connection	**7MF4997-2HF**
Seals for TG 52/50 and TG 52/150 made of silicone (FDA compliant)	**7MF4997-2HG**
Seals for flange connection with front-flush diaphragm Material FPM (Viton), 10 units	
• DN 25, PN 40 (M11)	**7MF4997-2HH**
• DN 25, PN 100 (M21)	**7MF4997-2HJ**
• 1", class 150 (M40)	**7MF4997-2HK**
• 1", class 300 (M45)	**7MF4997-2HL**

▶ Available ex stock

© Siemens AG 2013

Selection and Ordering data	Article No.
Operating Instructions[1]	
• for SITRANS DS III with HART	
- German	**A5E00047090**
- English	**A5E00047092**
- French	**A5E00053218**
- Spanish	**A5E00053219**
- Italian	**A5E00053220**
• for SITRANS DS III with PROFIBUS PA	
- German	**A5E00053275**
- English	**A5E00053276**
- French	**A5E00053277**
- Spanish	**A5E00053278**
- Italian	**A5E00053279**
• for SITRANS DS III with FOUNDATION Fieldbus	
- German	**A5E00279629**
- English	**A5E00279627**
Compact operating instructions The compact operating instructions are available in 21 EU languages on the product CD supplied with each transmitter. They can also be downloaded from the SITRANS P web page.	
Brief instruction (Leporello) German, English	
• for SITRANS DS III with HART - German, English	**A5E00047093**
• for SITRANS DS III with PROFIBUS PA - German, English	**A5E00053274**
• for SITRANS DS III with FOUNDATION Fieldbus - German, English	**A5E00282355**
CD with SITRANS P documentation German, English, French, Spanish, Italian incl. compact operating instructions in 21 EU languages	**A5E00090345**
Certificates (order only via SAP) instead of Internet download	
• hard copy (to order)	**A5E03252406**
• on CD (to order)	**A5E03252407**
Operating Instructions for replacement of electronics, measuring cell and connection board (only available from the Internet)[1]	**A5E00078060**
HART modem	
• with RS232 interface ▶	**7MF4997-1DA**
• with USB interface ▶	**7MF4997-1DB**
Supplementary electronics for 4-wire connection	**See page 1/159**

▶ Available ex stock

Power supply units see Chap. 7 "Supplementary Components".

[1] You can download these operating instructions free-of-charge from our Internet site at www.siemens.com/sitransp.

© Siemens AG 2013

Dimensional drawings

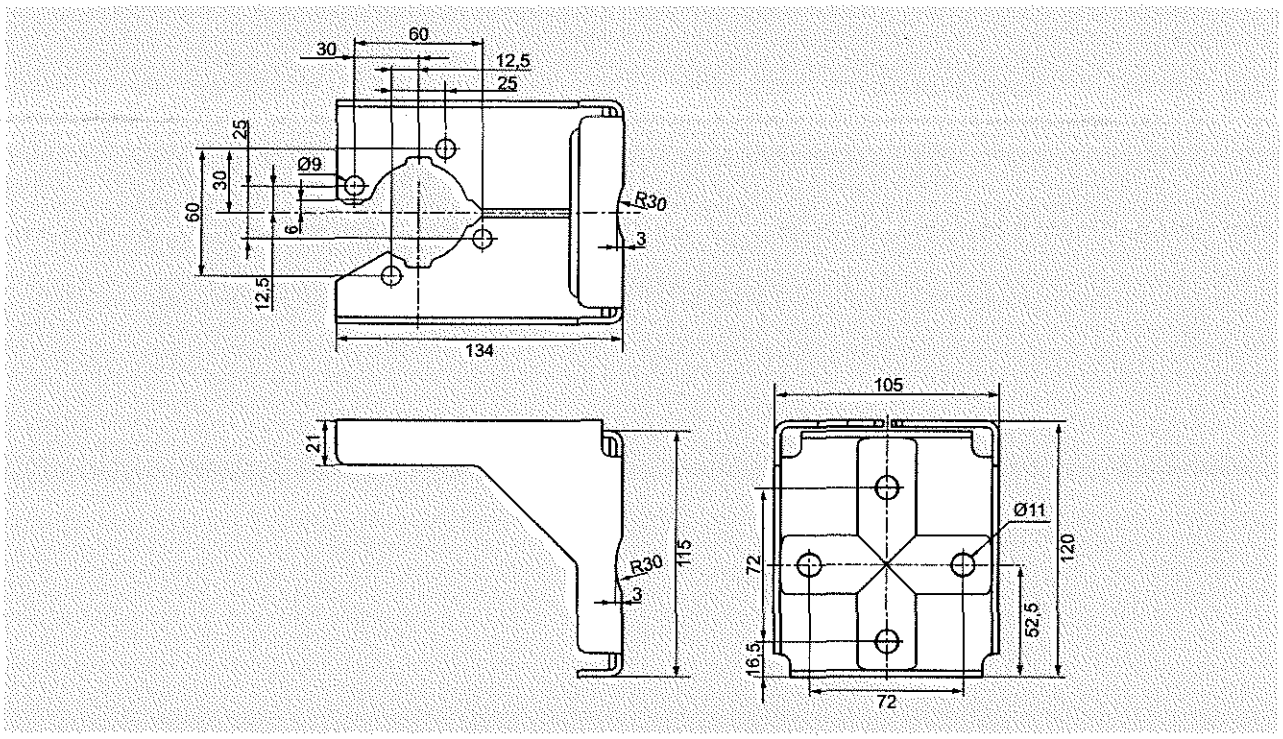

Mounting bracket for SITRANS P DS III and SITRANS P280 gauge and absolute pressure-transmitters, dimensions in mm
mounting bracket material: Sheet-steel Mat. No. 1.0330, chrome-plated, or stainless steel Mat. No. 1.4301 (304)

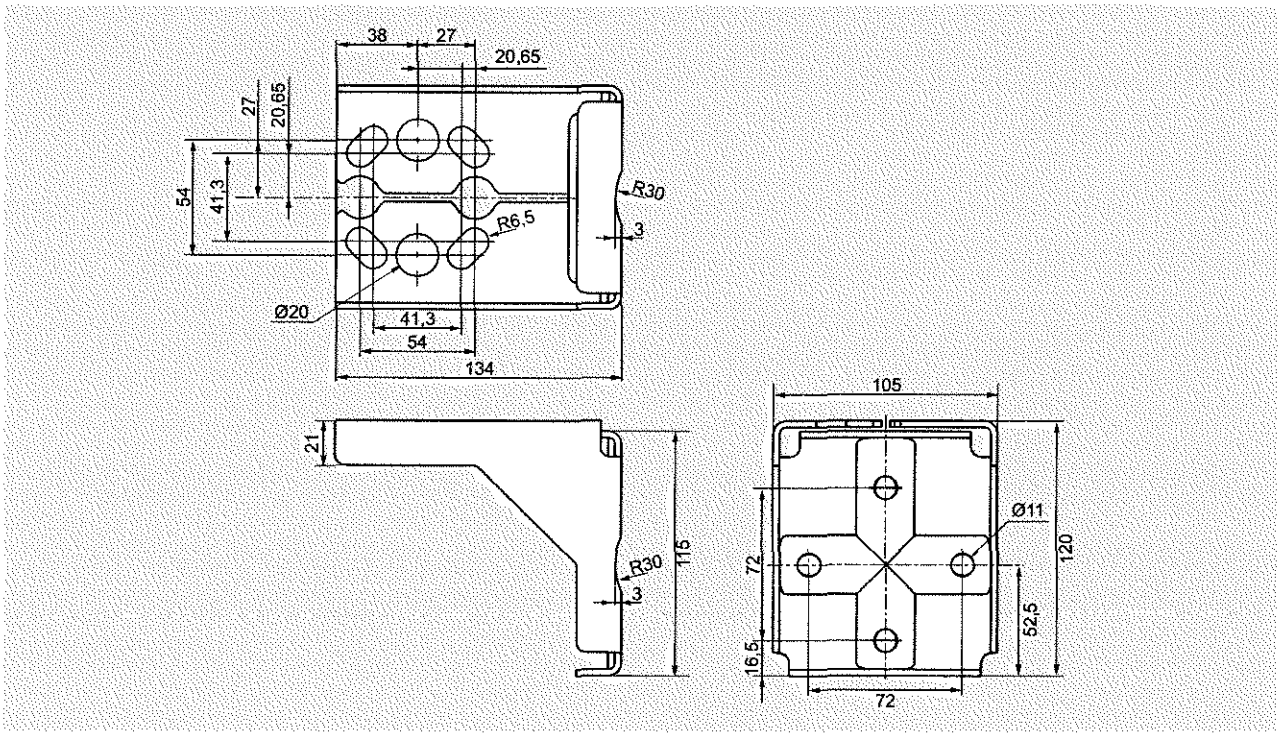

Mounting bracket for SITRANS P DS III differential pressure transmitter, dimensions in mm
mounting bracket material: Sheet-steel Mat. No. 1.0330, chrome-plated, or stainless steel Mat. No. 1.4301 (304)

© Siemens AG 2013

Overview

SITRANS P transmitters

- DS III for relative and absolute pressure (both designs) and
- DS III for differential pressure

can be delivered factory-fitted with the following valve manifolds:

- 7MF9011-4EA and 7MF9011-4FA valve manifolds for gauge pressure and absolute pressure transmitters
- 7MF9411-5BA and 7MF9411-5CA valve manifolds for absolute pressure and differential pressure transmitters

Design

The 7MF9011-4EA valve manifolds are sealed with gaskets made of PTFE between transmitter and the valve manifold as standard. Soft iron, stainless steel and copper gaskets are also available for sealing purposes if preferred.

The 7MF9011-4FA valve manifolds are sealed with PTFE sealing tape between the transmitter and the valve manifold.

The 7MF9411-5BA and 7MF9411-5CA valve manifolds are sealed with PTFE sealing rings between the transmitter and the valve manifold.

Once installed, the complete unit is checked under pressure for leaks (compressed air 6 bar (87 psi)) and is certified leak-proof with a test report to EN 10204 - 2.2.

All valve manifolds should preferably be secured with the respective mounting brackets. The transmitters are mounted on the valve manifold and not on the unit itself.

If you order a mounting bracket when choosing the option "Factory mounting of valve manifolds", you will receive a mounting bracket for the valve manifold instead of a bracket for mounting the transmitter.

If you order an acceptance test certificate 3.1 to EN10204 when choosing the option "Factory mounting of valve manifolds", a separate certificate is provided for the transmitters and the valve manifolds respectively.

Selection and Ordering data

7MF9011-4FA
valve manifold on relative and absolute pressure transmitters

Add **-Z** to the Article No. of the transmitter and add Order codes	Order code
SITRANS P DSIII 7MF403.-...1.-..., 7MF423.-...1.-... With process connection female thread ½-14 NPT in-sealed with PTFE sealing tape Delivery incl. high-pressure test certified by test report to EN10204-2.2	**T03**
Further designs:	
Delivery includes mounting brackets and mounting clips made of stainless steel (instead of the mounting bracket supplied with the transmitter)	**A02**
Supplied acceptance test certificate to EN 10204- 3.1 for transmitters and mounted valve manifold	**C12**

7MF9011-4EA
valve manifold on relative and absolute pressure transmitters

Add **-Z** to the Article No. of the transmitter and add Order codes	Order code
SITRANS P DSIII 7MF403.-...0.-..., 7MF423.-...0.-... with process connection collar G1/2 A to EN 837-1 with gasket made of PTFE between valve manifold and transmitter	**T02**
Alternative sealing material:	
• Soft iron	**A70**
• Stainless steel, Mat. No. 14571	**A71**
• copper	**A72**
Delivery incl. high-pressure test certified by test report to EN 10204-2.2	
Further designs:	
Delivery includes mounting brackets and mounting clips made of stainless steel (instead of the mounting bracket supplied with the transmitter)	**A02**
Supplied acceptance test certificate to EN 10204- 3.1 for transmitters and mounted valve manifold	**C12**

7MF9411-5BA
valve manifold on absolute and differential pressure transmitters

Add **-Z** to the Article No. of the transmitter and add Order codes	Order code
SITRANS P DSIII 7MF433.-..., 7MF443.-... and 7MF453.-... [1] mounted with gaskets made of PTFE and screws made of	
• chromized steel	**U01**
• made of stainless steel	**U02**
Delivery incl. high-pressure test certified by test report to EN 10204-2.2	
Further designs:	
Delivery includes mounting bracket and mounting clips made of	
• Steel	**A01**
• Stainless steel	**A02**
(instead of the mounting bracket supplied with the transmitter)	
Supplied acceptance test certificate to EN 10204-3.1 for transmitters and mounted valve manifold	**C12**

7MF9411-5CA
valve manifold on differential pressure transmitters

Add **-Z** to the Article No. of the transmitter and add Order codes	Order code
SITRANS P DSIII 7MF443.-... and 7MF453.-...1 [1] mounted with gaskets made of PTFE and screws made of	
• chromized steel	**U03**
• Stainless steel	**U04**
Delivery incl. high-pressure test certified by test report to EN 10204-2.2	
Further designs:	
Delivery includes mounting bracket and mounting clips made of	
• Steel	**A01**
• Stainless steel	**A02**
(instead of the mounting bracket supplied with the transmitter)	
Supplied acceptance test certificate to EN 10204-3.1 for transmitters and mounted valve manifold	**C12**

[1] For 7MF453.-... transmitters, you require a 7/10-20 UNF connection thread in the process flange

© Siemens AG 2013

Dimensional drawings

Valve manifolds mounted on SITRANS P DS III

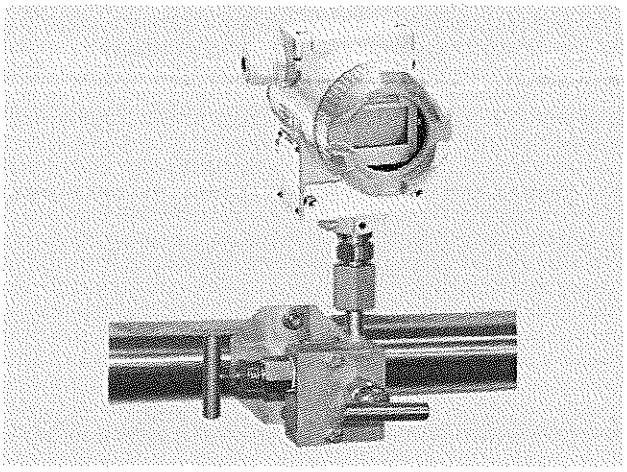

7MF9011-4EA valve manifold with mounted gauge pressure and absolute pressure transmitters

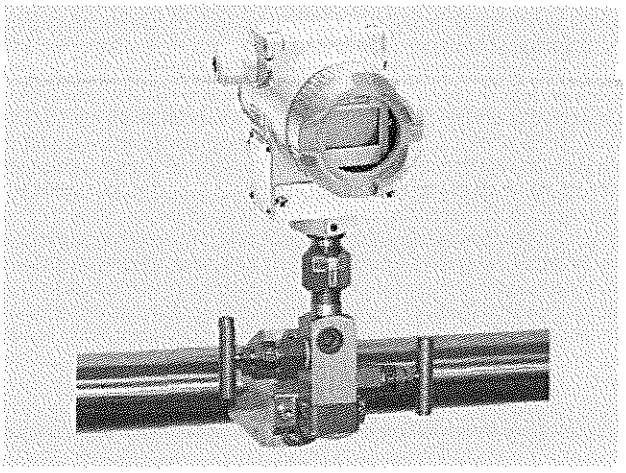

7MF9011-4FA valve manifold with mounted gauge pressure and absolute pressure transmitters

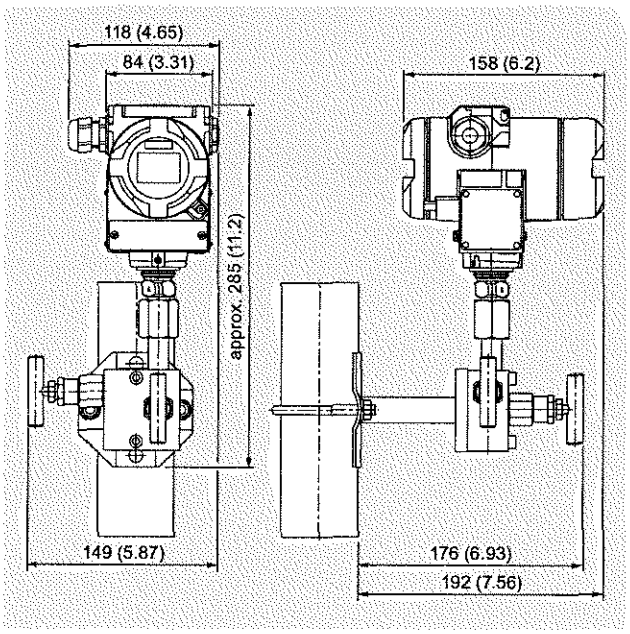

7MF9011-4EA valve manifold with mounted gauge pressure and absolute pressure transmitters, dimensions in mm (inch)

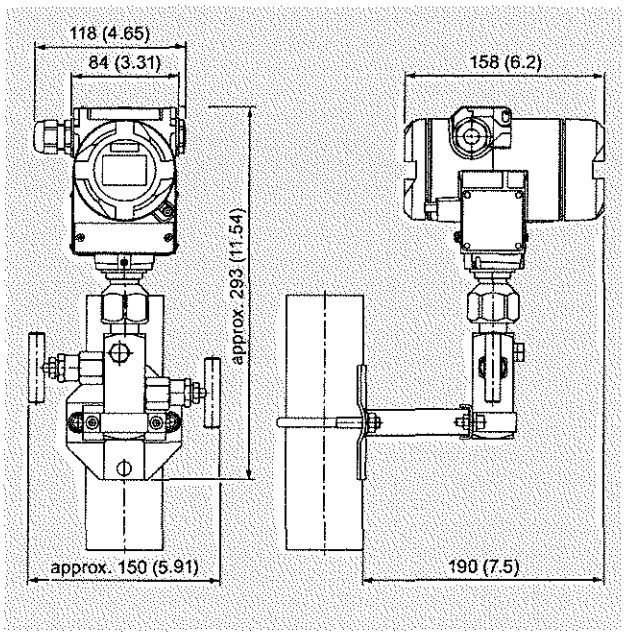

7MF9011-4FA valve manifold with mounted gauge pressure and absolute pressure transmitters, dimensions in mm (inch)

© Siemens AG 2013

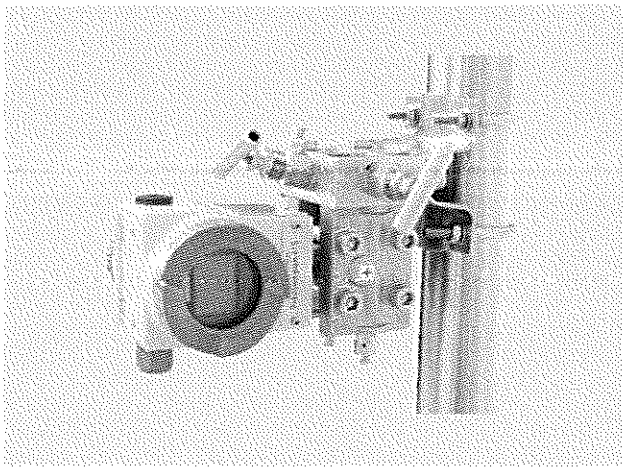

7MF9411-5BA valve manifold with mounted differential pressure transmitter

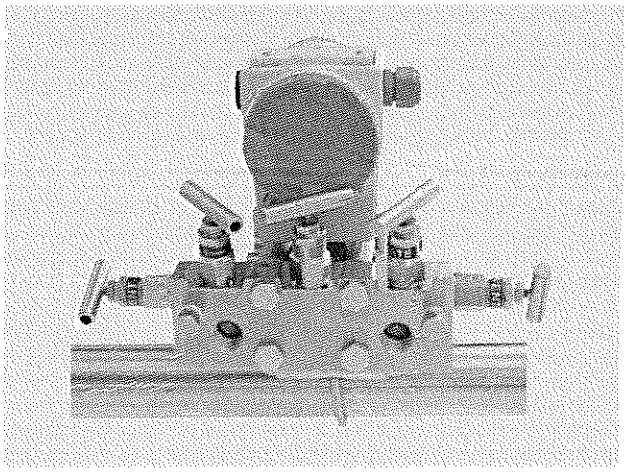

7MF9411-5CA valve manifold with mounted differential pressure transmitter

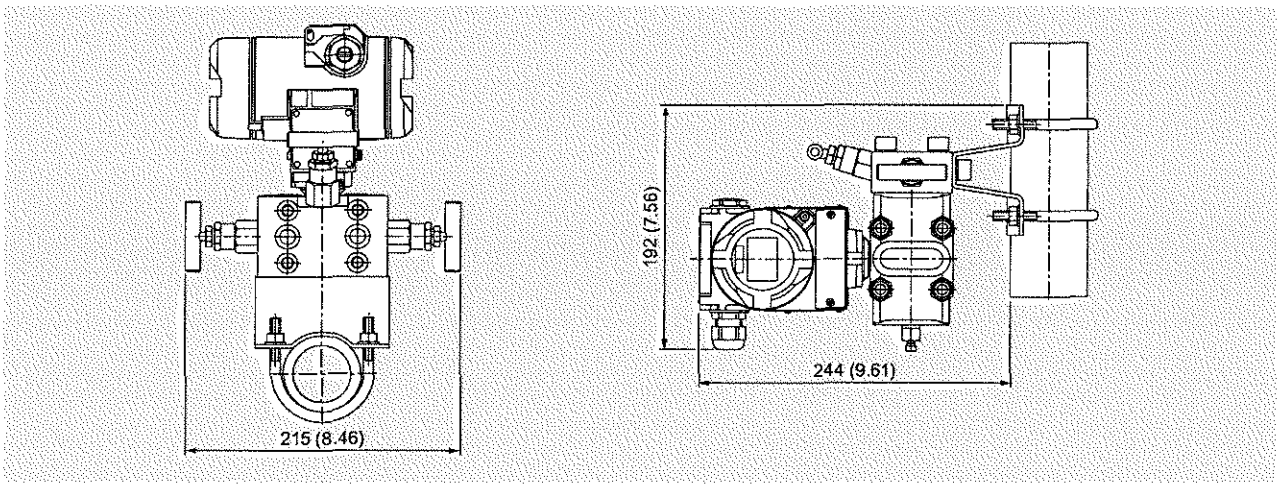

7MF9411-5BA valve manifold with mounted differential pressure transmitter, dimensions in mm (inch)

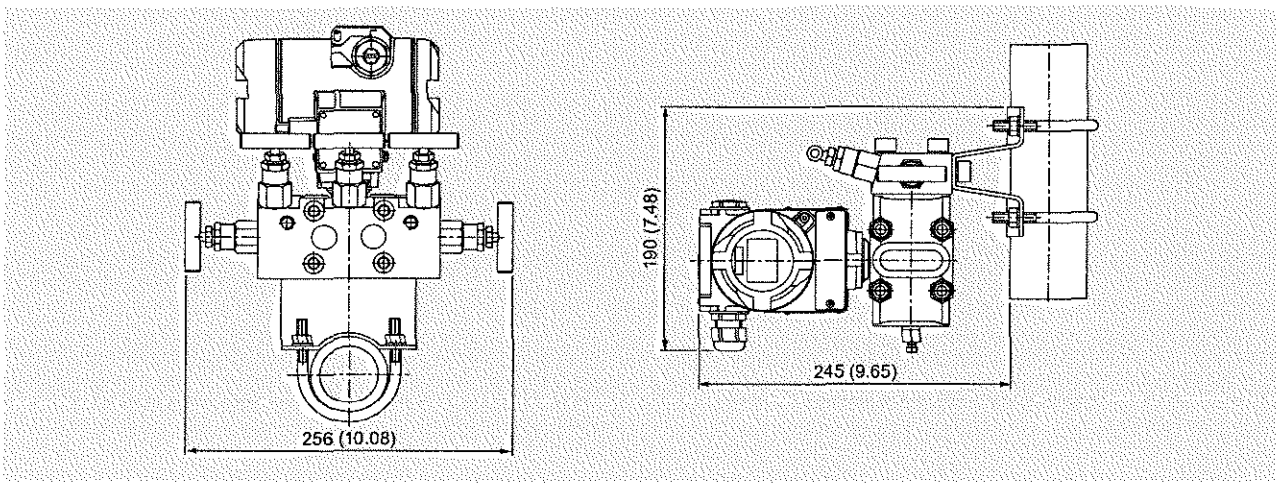

7MF9411-5CA valve manifold with mounted differential pressure transmitter, dimensions in mm (inch)

Chapter 2.3

Technical Literature - Level Measurement

© Siemens AG 2012

Overview

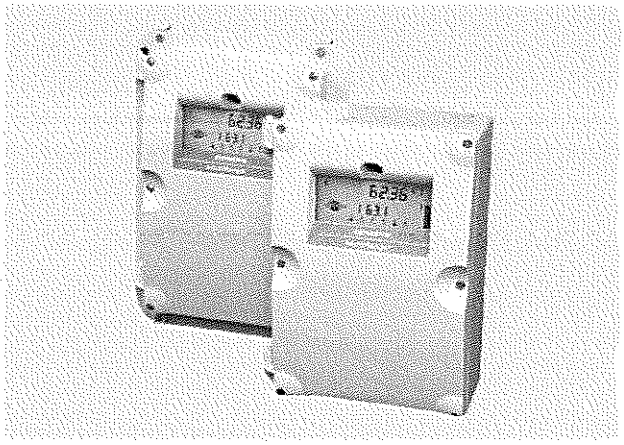

MultiRanger is a versatile short to medium-range ultrasonic single and multi-vessel level monitor/controller for virtually any application in a wide range of industries.

Benefits

- Digital input for back-up level override from point level device
- Communication using built-in Modbus RTU via RS 485
- Compatible with SmartLinx system and SIMATIC PDM configuration software
- Single or dual point level monitoring
- Auto False-Echo Suppression for fixed obstruction avoidance
- Differential amplifier transceiver for common mode noise reduction and improved signal-to-noise ratio
- MultiRanger 100: level measurements, simple pump control, and level alarm functions
- MultiRanger 200: level, volume and flow measurements in open channels, differential control, extended pump control, and alarm functions
- Wall and panel mounting options

Application

MultiRanger can be used on different materials, including fuel oil, municipal waste, acids, woodchips, or on materials with high angles of repose. MultiRanger offers true dual point monitoring, digital communications with built-in Modbus RTU via RS 485, as well as compatibility with SIMATIC PDM, allowing PC configuration and setup. MultiRanger features Sonic Intelligence advanced echo-processing software for increased reading reliability.

MultiRanger 100 offers cost-effective level alarming, as well as on/off and alternating pump control. MultiRanger 200 will monitor open channel flow and features more advanced relay alarming and pump control functions as well as volume conversion.

It is compatible with chemical-resistant EchoMax transducers that can be used in hostile environments at temperatures as high as 145 °C (293 °F).

- Key Applications: wet wells, flumes/weirs, bar screen control, hoppers, chemical storage, liquid storage, crusher bins, dry solids storage

Design

The MultiRanger is available in wall or panel mounting options.

© Siemens AG 2012

Technical specifications

Mode of Operation	
Measuring principle	Ultrasonic level measurement
Measuring range	0.3 ... 15 m (1 ... 50 ft)
Measuring points	1 or 2
Input	
• Analog (MultiRanger 200 only)	0 ... 20 mA or 4 ... 20 mA, from alternate device, scaleable
• Discrete	10 ... 50 V DC switching level Logical 0 ≤ 0.5 V DC Logical 1 = 10 ... 50 V DC Max. 3 mA
Output	
EchoMax transducer	44 kHz
Ultrasonic transducer	Compatible transducers: ST-H and EchoMax series XPS-10/10F, XPS 15/15F, XCT-8, XCT-12, and XRS-5
Relays	Rating 5 A at 250 V AC, non-inductive
• Version with 1 relay (MultiRanger 100 only)	1 SPST Form A
• Version with 3 relays	2 SPST Form A/1 SPDT Form C
• Version with 6 relays	4 SPST Form A/2 SPDT Form C
mA output	0 ... 20 mA or 4 ... 20 mA
• Max. load	750 Ω, isolated
• Resolution	0.1 % of range
Accuracy	
Error in measurement	0.25 % of range or 6 mm (0.24 inch), whichever is greater
Resolution	0.1 % of measuring range[1] or 2 mm (0.08 inch), whichever is greater
Temperature compensation	• -50 ... +150 °C (-58 ... +302 °F) • Integral temperature sensor • External TS-3 temperature sensor (optional) • Programmable fixed temperature values
Rated operating conditions	
Installation conditions	
• Location	Indoor/outdoor
• Installation category	II
• Pollution degree	4
Ambient conditions	
• Ambient temperature (housing)	-20 ... +50 °C (-4 ... +122 °F)

Design	
Weight	
• Wall mount	1.37 kg (3.02 lb)
• Panel mount	1.50 kg (3.31 lb)
Material (enclosure)	Polycarbonate
Degree of protection (enclosure)	
• Wall mount	IP65/Type 4X/NEMA 4X
• Panel mount	IP54/Type 3/NEMA 3
Electrical connection	
• Transducer and mA output signal	2-core copper conductor, twisted, shielded, 0.5 ... 0.75 mm² (22 ... 18 AWG), Belden 8760 or equivalent is acceptable
• Max. separation between transducer and transceiver	365 m (1 200 ft)
Displays and controls	100 x 40 mm (4 x 1.5 inch) multi-block LCD with backlighting
Programming	Programming using hand-held programmer, SIMATIC PDM or via PC with Dolphin Plus software
Power supply	
• AC version	100 ... 230 V AC ± 15 %, 50/60 Hz, 36 VA (17 W)
• DC version	12 ... 30 V DC (20 W)
Certificates and approvals	• CE, C-TICK[2] • Lloyd's Register of Shipping • ABS Type Approval • FM, $CSA_{US/C}$, UL listed • CSA Class I, Div. 2, Groups A, B, C and D; Class II, Div.2, Groups F and G, Class III (wall mount only), ATEX II 3D
Communication	• RS 232 with Modbus RTU or ASCII via RJ-11 connector • RS 485 with Modbus RTU or ASCII via terminal strips • Optional: SmartLinx cards for - PROFIBUS DP - DeviceNet - Allen-Bradley Remote I/O

1) Program range is defined as the empty distance to the face of the transducer plus any range extension.
2) EMC performance available on request

© Siemens AG 2012

Level measurement
Continuous level measurement – Ultrasonic controllers

MultiRanger 100/200

Selection and Ordering data	Order No.
MultiRanger 100/200 Versatile short to medium-range ultrasonic single and multi-vessel level monitor/controller for virtually any application in a wide range of industries	**7ML5033-** ■■■■■ - ■■
Versions	
MultiRanger 100, level measurement only	1
MultiRanger 200, level, volume, flow and differential measurements	2
Mounting, enclosure design	
Wall mount, standard enclosure	A
Wall mount, 4 entries, 4 M20 cable glands included	B
Panel mount (CE, $CSA_{us/c}$, FM, UL)	C
Power supply	
100 ... 230 V AC	A
12 ... 30 V DC	B
Number of measurement points	
Single point version	0
Dual point version	1
Communication (SmartLinx)	
Without module	0
SmartLinx Allen-Bradley Remote I/O module	1
SmartLinx PROFIBUS DP module	2
SmartLinx DeviceNet module See SmartLinx product page 4/343 for more information.	3
Output relays	
3 relays (2 Form A, 1 Form C), 250 V AC	1
6 relays (4 Form A, 2 Form C), 250 V AC	2
1 relay (1 Form A), 250 V AC (available on MultiRanger 100 model only)	3
Approvals	
General Purpose CE, FM, $CSA_{us/c}$, UL listed, C-TICK	A
CSA Class I, Div. 2, Groups A, B, C and D; Class II, Div 2, Groups F and G; Class III[1]	B
ATEX II 3D[2]	C

[1] For wall mount applications only
[2] For standard enclosure wall mount, option A only

Selection and Ordering data	Order code
Further designs	
Please add **"-Z"** to Order No. and specify Order code(s).	
Stainless steel tag [69 x 50 mm (2.71 x 1.97 inch)]: Measuring-point number/identification (max. 27 characters) specify in plain text	**Y15**
Operating Instructions	Order No.
English	**7ML1998-5FB06**
French	**7ML1998-5FB13**
Spanish	**7ML1998-5FB23**
German	**7ML1998-5FB36**
Quick Start guide, multi-language Note: The Operating Instructions should be ordered as a separate item on the order. This device is shipped with the Siemens Milltronics manual CD containing the complete ATEX Quick Start and Operating Instructions library.	**7ML1998-5QD83**
Other Operating Instructions	
SmartLinx Allen-Bradley Remote I/O, English	**7ML1998-1AP03**
SmartLinx PROFIBUS DP, English	**7ML1998-1AQ03**
SmartLinx PROFIBUS DP, German	**7ML1998-1AQ33**
SmartLinx DeviceNet, English Note: The appropriate SmartLinx Operating Instructions should be ordered as a separate line on the order.	**7ML1998-1BH02**
Accessories	
Handheld programmer	**7ML1830-2AK**
Tag, stainless steel, 12 x 45 mm (0.47 x 1.77 inch), one text line, suitable for enclosure	**7ML1930-1AC**
M20 cable gland kit (4 M20 cable glands, 4 M20 nuts, 4 washers)	**7ML1930-1FV**
Sunshield kit, 304 SS	**7ML1930-1GA**
SITRANS RD100 Remote display - see Chapter 7	
SITRANS RD200 Remote display - see Chapter 7	
SITRANS RD500 web, datalogging, alarming, ethernet, and modem support for instrumentation - see Chapter 7	**7ML5750-1AA00-0**
Spare parts	
Power Supply Board (100 ... 230 V AC)	**7ML1830-1MD**
Power Supply Board (12 ... 30 V DC)	**7ML1830-1ME**
Display Board	**7ML1830-1MF**

© Siemens AG 2012

Dimensional drawing

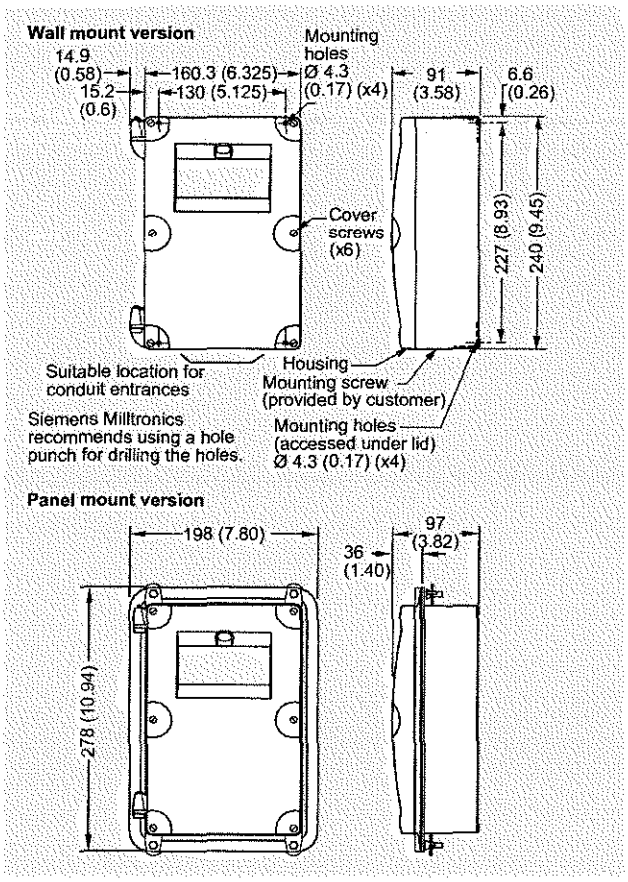

MultiRanger, dimensions in mm (inch)

Schematics

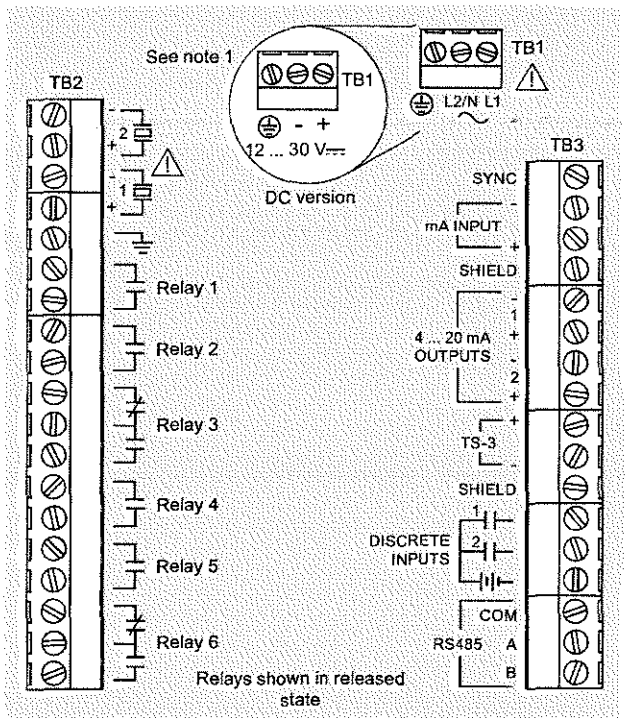

Note:

1. Use 2-core copper wire, twisted, with shield, for expansion up to 365 m (1 200 ft). Route cable in grounded metal conduit, separate from other cables.
2. Verify that all system components are installed in accordance with instructions.
3. Connect all cable shields to the MultiRanger shield connections. Avoid differential ground potentials by not connecting cable shields to ground (earth) anywhere else.
4. Keep exposed conductors on shielded cables as short as possible to reduce noise on the line caused by stray transmissions and noise pickup.

MultiRanger connections

© Siemens AG 2012

SITRANS LR250 Horn Antenna

Overview

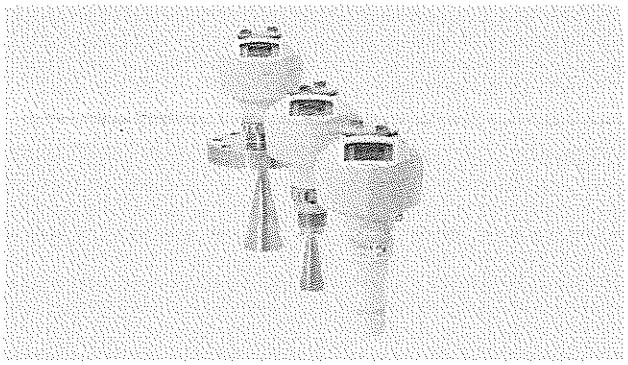

SITRANS LR250 is a 2-wire, 25 GHz pulse radar level transmitter for continuous monitoring of liquids and slurries in storage and process vessels including high temperature and pressure, to a range of 20 m (66 ft).

Benefits

- Graphical local user interface (LUI) makes operation simple with plug-and-play setup using the intuitive Quick Start Wizard
- LUI displays echo profiles for diagnostic support
- 25 GHz high frequency allows for small antennas for easy mounting in nozzles
- Insensitive to mounting location and obstructions, and less sensitive to nozzle interference
- Short blanking distance for improved minimum measuring range to 50 mm (2 inch) from the end of the antenna
- Communication using HART or PROFIBUS PA, or FOUNDATION Fieldbus
- Process Intelligence signal processing for improved measurement reliability and Auto False-Echo Suppression of fixed obstructions
- Programming using infrared Intrinsically Safe handheld programmer or over a network using SIMATIC PDM, Emerson AMS, or Field Device Tools, such as PACTware or Fieldcare via SITRANS DTM
- Suitable for use in Safety related systems in accordance with IEC 61508/61511 (SIL-2)
- 3 mm (0.118 inch) accuracy in accordance with IEC 60770-1

Application

SITRANS LR250 includes a graphical local user interface (LUI) that improves setup and operation by including an intuitive Quick Start Wizard, and echo profile displays for diagnostic support. Startup is easy using the Quick Start wizard with a few parameters required for basic operation.

The 25 GHz frequency creates a narrow, focused beam allowing for smaller horn antenna options and decreasing sensitivity to obstructions.

SITRANS LR250's unique design allows safe and simple programming using the Intrinsically Safe handheld programmer without saving to open the instrument's lid.

SITRANS LR250 measures superbly on low dielectric media, and in small vessels, as well as tall and narrow vessels.

- Key Applications: liquid bulk storage tanks, process vessels with agitators, vaporous liquids, high temperatures, low dielectric media and applications with functional safety requirements

Configuration

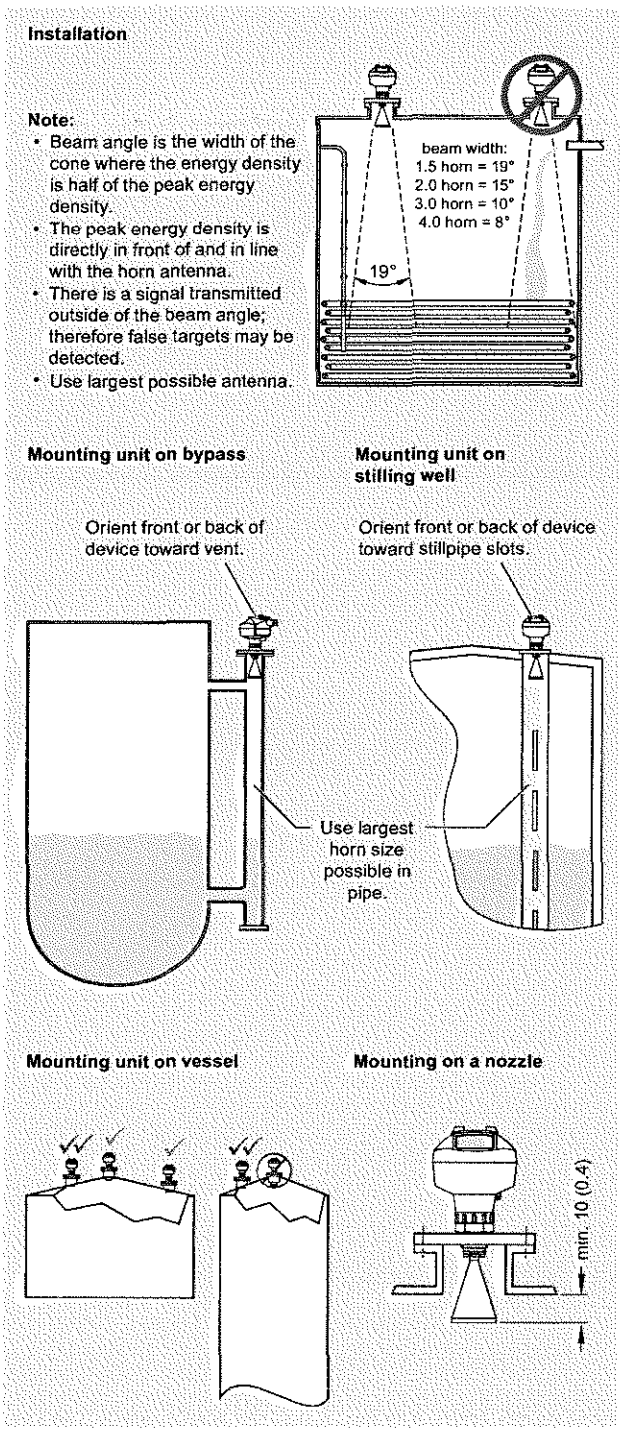

SITRANS LR250 installation, dimensions in mm (inch)

© Siemens AG 2012

Technical specifications

Mode of operation	
Measuring principle	Radar level measurement
Frequency	K-band (25.0 GHz)
Minimum measuring range	50 mm (2 inch) from end of antenna
Maximum measuring range	20 m (65 ft), antenna dependent
Output	
HART:	Version 5.1
• Analog output	4 ... 20 mA
• Accuracy	± 0.02 mA
• Fail-safe	• Programmable as high low or hold (loss of echo) • NE 43 programmable
PROFIBUS PA	Profile 3.1
• Function blocks	2 Analog input (AI)
FOUNDATION Fieldbus	H1
• Functionality	Basic or LAS
• Version	ITK 5.2.0
• Function blocks	2 Analog input (AI)
Performance (according to reference conditions IEC60770-1)	
Maximum measured error	3 mm (0.118 inch)
Influence of ambient temperature	< 0.003 %/K
Rated operating conditions	
Installation conditions	
• Location	Indoor/outdoor
Ambient conditions (enclosure)	
• Ambient temperature	-40 ... +80 °C (-40 ... +176 °F)
• Installation category	I
• Pollution degree	4
Medium conditions	
Dielectric constant ε_r	> 1.6, antenna and application dependent
Process temperature	-40 ... +200 °C (-40 ... +392 °F) (at process connection with FKM o-ring) -20 ... +200 °C (-4 ... +392 °F) (at process connection with FFKM o-ring)
Process pressure	Up to 40 bar g (580 psi g), process connection and temperature dependent. See Pressure/Temperature curves for more information (page 4/238)
Design	
Enclosure	
• Material	Aluminum, polyester powder-coated
• Cable inlet	2 x M20x1.5 or 2 x ½" NPT
Degree of protection	Type 4X/NEMA 4X, Type 6/NEMA 6, IP67, IP68
Weight	< 3 kg (6.6 lb) 3.75 mm (1½ inch) threaded connection with 1½" horn antenna
Display (local)	Graphic local user interface including quick start wizard and echo profile display
Antenna	
• Material	316L stainless steel [optional alloy N06022/2.4602 (Hastelloy C-22 or equivalent)]
• Dimensions (nominal horn sizes)	Standard 1.5 inch(40 mm), 2 inch (48 mm), 3 inch (75 mm), 4 inch(95 mm) horn and optional 100 mm (4 inch) horn extension

Process connections	
• Process connection	1½" or 2" NPT [(Taper), ANSI/ASME B1.20.1] R 1½" or 2" [(BSPT), EN10226] G 1½" or 2" [(BSPP), ENISO 228-1]
• Flange connection	2", 3", 4" (ANSI 150, 300 lb), 50, 80, 100 mm (PN 16, 40, JIS10K)
Power supply	
4 ... 20 mA/HART	Nominal 24 V DC (max. 30 V DC) with max. 550 Ω
PROFIBUS PA	• 15 mA • per IEC 61158-2
FOUNDATION Fieldbus	• 20.0 mA • per IEC 61158-2
Certificates and approvals	
General	CSAUS/C, CE, FM, NE 21, C-TICK
Radio	FCC, Industry Canada and Europe ETSI EN 302-372, C-TICK
Hazardous	
• Explosion Proof (Brazil)	INMETRO Ex d ia mb IIC T4 Ga/Gb; Ex ia ta IIIC T90 °C Da IP67
• Increased Safety (Brazil)	INMETRO Ex e ia mb IIC T4 Ga/Gb; Ex ia ta IIIC T90 °C Da IP67
• Intrinsically Safe (Brazil)	INMETRO Ex ia IIC T4 Ga, Ex ia ta IIIC T90 °C Da IP67
• Explosion Proof (Canada/USA)	CSA/FM Class I, Div. 1, Groups A, B, C, D; Class II, Div. 1, Groups E, F, G; Class III T4
• Intrinsically Safe (Canada/USA)	CSA/FM Class I, Div. 1, Groups A, B, C, D; Class II, Div. 1, Groups E, F, G; Class III T4
• Non-incendive (Canada/USA)	CSA/FM Class I, Div. 2, Groups A, B, C, D T5
• Increased Safety/Flame Proof (China)	NEPSI Ex dmbia IIC T4/ Ex embia IIC T4/ DIP A20 TA, T90 °C IP67
• Intrinsically Safe (China)	NEPSI Ex ia IIC T4/DIP A20 T_a T90 °C IP67
• Non-sparking/Energy Limited (China)	NEPSI Ex nA/nL IIC T4
• Intrinsically Safe (Europe)	ATEX II 1G EEx ia IIC T4 ATEX II 1D Ex iaD 20 tD A20 IP67 T90 °C
• Non-sparking/Energy Limited (Europe)	ATEX II 3G EEx nA/nL IIC T4 Gc
• Flame Proof (International/Europe)	IECEx/ATEX II 1/2 GD, 1D, 2D, Ex dmbia IIC T4 Ga/Gb, Ex iaD 20 tD A20 IP67 T90 °C
• Increased Safety (International/Europe)	IECEx/ATEX II 1/2 GD, 1D, 2D, Ex embia IIC T4 Ga/Gb, Ex iaD 20 tD A20 IP67 T90 °C
• Intrinsically Safe (International)	IECEx Ex ia IIC T4, Ex iaD 20 tD A20 IP67 T90 °C
• Explosion Proof (Russia)	GOST-R Ex d
• Increased Safety (Russia)	GOST-R Ex e
• Intrinsically Safe (Russia)	GOST-R Ex ia

© Siemens AG 2012

Programming	
• Intrinsically Safe Siemens handheld programmer	Infrared receiver
- Approvals for handheld programmer	IS model: ATEX II 1 GD Ex ia IIC T4 Ga Ex ia D 20 T135 °C Ta = -20 ... +50 °C CSA/FM Class I, II, III, Div. 1., Groups A, B, C, D, E, F, G, T6 Ta = 50 °C IECEx SIR 09.0073
• Handheld communicator	HART communicator 375/475
• PC	• SIMATIC PDM • Emerson AMS • SITRANS DTM (for connection into FDT, such as PACTware or Fieldcare)
• Display (local)	Graphic local user interface including quick start wizard and echo profile displays

© Siemens AG 2012

Selection and Ordering data	Order No.
SITRANS LR250	**7ML5431-**
2-wire, 25 GHz pulse radar level transmitter for continuous monitoring of liquids and slurries in storage and process vessels including high temperature and pressure, to a range of 20 m (66 ft). Ideal for small vessels and low dielectric media.	■■■■0 - ■■■■
Process Connection and Antenna Material	
316L (1.4435 or 1.4404) stainless steel, PTFE emitter, FKM seal[1]	0
316L (1.4435 or 1.4404) stainless steel, PTFE emitter, FFKM seal[1]	1
Hastelloy C-22/2.4602 (or equivalent), PTFE emitter, FKM seal[2]	2
Hastelloy C-22/2.4602 (or equivalent), PTFE emitter, FFKM seal[2]	3
Process Connection Type	
Threaded connection 316L	
1½" NPT (ASME B1.20.1) (tapered thread)[3]	A A
R 1½" [(BSPT), EN 10226-1] (tapered thread)[3]	A B
G 1½" [(BSPP), EN ISO 228-1] (parallel thread)[3]	A C
2" NPT (ASME B1.20.1) (tapered thread)	A D
R 2" [(BSPT), EN 10226-1] (tapered thread)	A E
G 2" [(BSPP), EN ISO 228-1] (parallel thread)	A F
3" NPT (ASME B1.20.1) (tapered thread)	A G
R 3" [(BSPT), EN 10226-1] (tapered thread)	A H
G 3" [(BSPP), EN ISO 228-1] (parallel thread)	A J
Flanged connection 316L	
2" Class 150 ASME B16.5 flat faced[4]	B A
3" Class 150 ASME B16.5 flat faced[4]	B B
4" Class 150 ASME B16.5 flat faced[4]	B C
2" Class 300 ASME B16.5 flat faced[4]	C A
3" Class 300 ASME B16.5 flat faced[4]	C B
4" Class 300 ASME B16.5 flat faced[4]	C C
DN 50 PN 16 EN 1092-1 Type A flat faced[4]	D A
DN 80 PN 16 EN 1092-1 Type A flat faced[4]	D B
DN 100 PN 16 EN 1092-1 Type A flat faced[4]	D C
DN 50 PN 40 EN 1092-1 Type A flat faced[4]	E A
DN 80 PN 40 EN 1092-1 Type A flat faced[4]	E B
DN 100 PN 40 EN 1092-1 Type A flat faced[4]	E C
50A 10K JIS B 2220 flat faced[4]	F A
80A 10K JIS B 2220 flat faced[4]	F B
100A 10K JIS B 2220 flat faced[4]	F C
DN 50 PN 16 DIN EN 1092-1 Type B1 raised face	G A
DN 80 PN 16 DIN EN 1092-1 Type B1 raised face	G B
DN 100 PN 16 DIN EN 1092-1 Type B1 raised face	G C
DN 150 PN 16 DIN EN 1092-1 Type B1 raised face	G D
DN 50 PN 40 DIN EN 1092-1 Type B1 raised face	H A
DN 80 PN 40 DIN EN 1092-1 Type B1 raised face	H B
DN 100 PN 40 DIN EN 1092-1 Type B1 raised face	H C
DN 150 PN 40 DIN EN 1092-1 Type B1 raised face	H D

Selection and Ordering data	Order No.
SITRANS LR250	**7ML5431-**
2-wire, 25 GHz pulse radar level transmitter for continuous monitoring of liquids and slurries in storage and process vessels including high temperature and pressure, to a range of 20 m (66 ft). Ideal for small vessels and low dielectric media.	■■■■0 - ■■■■
Flanged connection Hastelloy C	
2" Class 150 ASME B16.5 raised faced[4]	J A
3" Class 150 ASME B16.5 raised faced[4]	J B
4" Class 150 ASME B16.5 raised faced[4]	J C
2" Class 300 ASME B16.5 raised faced[4]	J D
3" Class 300 ASME B16.5 raised faced[4]	J E
4" Class 300 ASME B16.5 raised faced[4]	J F
DN 50 PN 16 EN 1092-1 Type A faced faced[4]	K A
DN 80 PN 16 EN 1092-1 Type A faced faced[4]	K B
DN 100 PN 16 EN 1092-1 Type A faced faced[4]	K C
DN 50 PN 40 EN 1092-1 Type A faced faced[4]	K D
DN 80 PN 40 EN 1092-1 Type A faced faced[4]	K E
DN 100 PN 40 EN 1092-1 Type A faced faced[4]	K F
50A 10K JIS B 2220 raised faced[4]	L A
80A 10K JIS B 2220 raised faced[4]	L B
100A 10K JIS B 2220 raised faced[4]	L C
DN 50 PN 16 EN 1092-1 Type B1 raised face	M A
DN 80 PN 16 EN 1092-1 Type B1 raised face	M B
DN 100 PN 16 EN 1092-1 Type B1 raised face	M C
DN 150 PN 16 EN 1092-1 Type B1 raised face	M D
DN 50 PN 40 EN 1092-1 Type B1 raised face	M E
DN 80 PN 40 EN 1092-1 Type B1 raised face	M F
DN 100 PN 40 EN 1092-1 Type B1 raised face	M G
DN 150 PN 40 EN 1092-1 Type B1 raised face	M H
Communication/Output	
PROFIBUS PA	1
4 ... 20 mA, HART, startup at < 3.6 mA	2
FOUNDATION Fieldbus	3
Enclosure/Cable inlet	
Aluminum, Epoxy painted	
2 x ½" NPT	0
2 x M20x1.5	1
Antenna	
1½" horn	A
2" horn (fits 2" ASME or DN 50 nozzles)	B
3" horn (fits 3" ASME or DN 80 nozzles)	C
4" horn (fits 4" ASME or DN 100 nozzles)	D
1½" horn with 100 mm extension[5]	E
2" horn with 100 mm extension	F
3" horn with 100 mm extension	G
4" horn with 100 mm extension	H
Hastelloy C22 (or equivalent)	
2" horn (fits 2" ASME or DN 50 nozzles)	J
3" horn (fits 3" ASME or DN 80 nozzles)	K
4" horn (fits 4" ASME or DN 100 nozzles)	L
2" horn (fits 2" ASME or DN 50 nozzles) with 100 mm extension	M
3" horn (fits 3" ASME or DN 80 nozzles) with 100 mm extension	N
4" horn (fits 4" ASME or DN 100 nozzles) with 100 mm extension	P

© Siemens AG 2012

SITRANS LR250 Horn Antenna

Selection and Ordering data	Order No.
SITRANS LR250	**7ML5431-**
2-wire, 25 GHz pulse radar level transmitter for continuous monitoring of liquids and slurries in storage and process vessels including high temperature and pressure, to a range of 20 m (66 ft). Ideal for small vessels and low dielectric media.	■■■■0 - ■■■■
Approvals	
General Purpose, CE, CSA, FM, FCC, R&TTE, C-TICK	A
Intrinsically Safe, CSA/FM Class I, II, III, Div. 1, Groups A, B, C, D, E, F, G, Industry Canada FCC	B
Intrinsically Safe, IECEx/ATEX II 1 GD Ex ia IIC T4, Ex iaD 20 tD A20 IP67 T90 °C, INMETRO Ex ia IIC T4 Ga, Ex ta IIIC T90 °C Da IP67, CE, R&TTE, C-TICK	C
Non-incendive, CSA/FM Class I, Div. 2, Groups A, B, C, D, FCC	D
Non-sparking, Energy Limited, ATEX II 3G Ex nA/nL IIC T4, CE, R&TTE, C-TICK	E
Increased Safety, IECEx/ATEX II 1/2 GD Ex embia IIC T4, Ex iaD 20 tD A20 IP67 T90 °C, INMETRO Ex e ia mb IIC T4 Ga/Gb, Ex tb IIIC T90 °C Db IP67, CE, R&TTE, C-TICK[5]	F
Flame Proof, IECEx/ATEX II 1/2 GD Ex dmbia IIC T4, Ex iaD 20 tD A20 IP67 T90 °C, INMETRO Ex d ia mb IIC T4 Ga/Gb, Ex tb IIIC T90 °C Db IP67, CE, R&TTE, C-TICK[5]	G
Explosion Proof CSA/FM Class I, II, III, Div. 1, Gr. A, B, C, D, E, F, G, Industry Canada FCC[5]	H
Pressure rating	
Rating per Pressure/Temperature curves in manual	0
0.5 bar g (7.25 psi g) maximum	1

1) Available with process connection options AA ... HD & Antenna Versions A ... H only
2) Available with process connection options JA ... MH & Antenna Versions J ... P only
3) Available For antenna versions A and E only, max. range 10 m (32.8 ft), dk > 3
4) Siemens Milltronics type flange (flange bolting patterns and facings dimensionally correspond to the applicable ASME B16.5, or EN 1092-1, or JIS B 2220 standard), see operating instructions for details
5) Applicable with communication option 2 only

© Siemens AG 2012

Selection and Ordering data	Order code
Further designs	
Please add **"-Z"** to Order No. and specify Order code(s).	
Plug M12 with mating Connector[1)2)3)]	**A50**
Plug 7/8" with mating Connector[2)3)4)]	**A55**
Stainless steel tag [69 x 50 mm (2.71 x 1.97 inch)]: Measuring-point number/identification (max. 27 characters); specify in plain text	**Y15**
Manufacturer's Test Certificate: M to DIN 55350, Part 18 and to ISO 9000	**C11**
Acceptance test certificate 3.1 of EN 10204	**C12**
Functional Safety - SIL-2 suitable in accordance with IEC 61508/61511[3) 5)]	**C20**
Namur NE43 compliant, device preset to failsafe < 3.6 mA[5)]	**N07**
Operating Instructions for HART/mA device	Order No.
English	**7ML1998-5JE05**
German	**7ML1998-5JE34**
Note: The Operating Instructions should be ordered as a separate line item on the order.	
Multi-language Quick Start manual This device is shipped with the Siemens Milltronics manual CD containing the complete ATEX Quick Start and Operating Instructions library.	**7ML1998-5QX83**
Operating Instructions for PROFIBUS PA device	
English	**7ML1998-5JF05**
German	**7ML1998-5JF34**
Note: The Operating Instructions should be ordered as a separate line item on the order.	
Multi-language Quick Start manual This device is shipped with the Siemens Milltronics manual CD containing the complete ATEX Quick Start and Operating Instructions library.	**7ML1998-5XE83**
Operating Instructions for FOUNDATION Fieldbus device	
English	**7ML1998-5KL03**
German	**7ML1998-5KL32**
Note: The Operating Instructions should be ordered as a separate line item on the order.	
Multi-language Quick Start manual This device is shipped with the Siemens Milltronics manual CD containing the complete ATEX Quick Start and Operating Instructions library.	**7ML1998-5XN82**

Selection and Ordering data	Order code
Accessories	
Handheld programmer, Intrinsically safe, EEx ia	**7ML1930-1BK**
HART modem/RS 232 (for use with a PC and SIMATIC PDM)	**7MF4997-1DA**
HART modem/USB (for use with a PC and SIMATIC PDM)	**7MF4997-1DB**
One metallic cable gland M20x1.5, rated -40 ... +80 °C (-40 ... +176 °F), HART (two are required)	**7ML1930-1AP**
One metallic cable gland M20x1.5, rated -40 ... +80 °C (-40 ... +176 °F), PROFIBUS PA and FOUNDATION Fieldbus (two are required)[6)]	**7ML1930-1AQ**
FDA approved FKM o-ring for 2" G (BSPP) process connections -28 ... +80 °C (-28 ... +176 °F)	**7ML1830-3AN**
SITRANS RD100 Remote display - see Chapter 7	
SITRANS RD200 Remote display - see Chapter 7	
SITRANS RD500 web, datalogging, alarming, ethernet, and modem support for instrumentation - see Chapter 7	**7ML5750-1AA00-0**

1) Available with enclosure option 1 only
2) To be used with communication options 1 and 3 only. Connector has IP67 rating.
3) Available with approval options A and B. Available with approval option C for use on intrinsically safe applications only. Not rated for dust Ex.
4) Available with enclosure option 0 only
5) Applicable to communication option 2 only
6) For use with communication option 1 and 3 only

© Siemens AG 2012

Characteristic curves

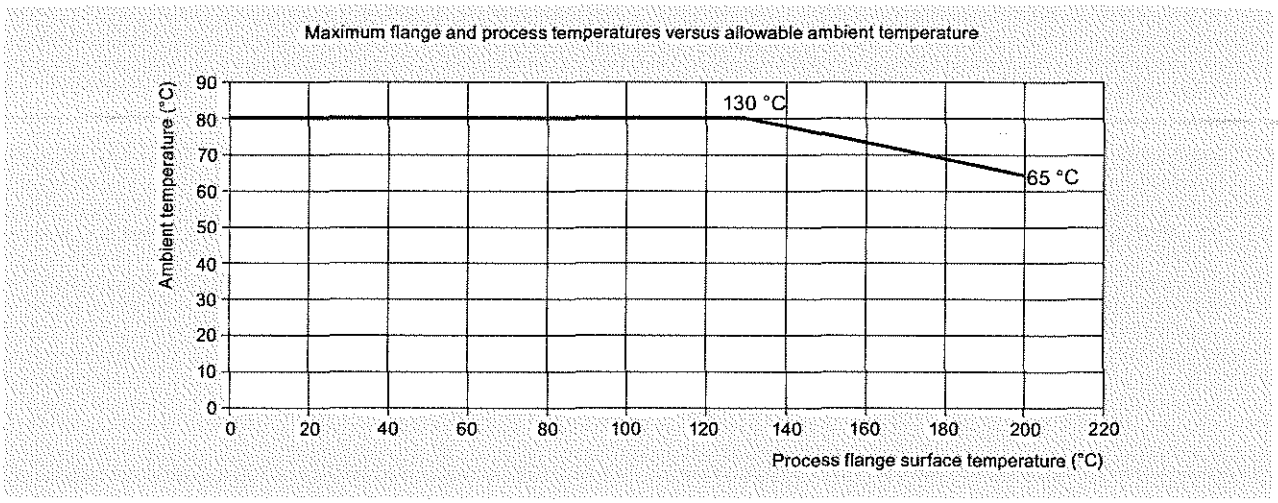

SITRANS LR250 Ambient/Process Flange Surface Temperature Curve

© Siemens AG 2012

Dimensional drawings

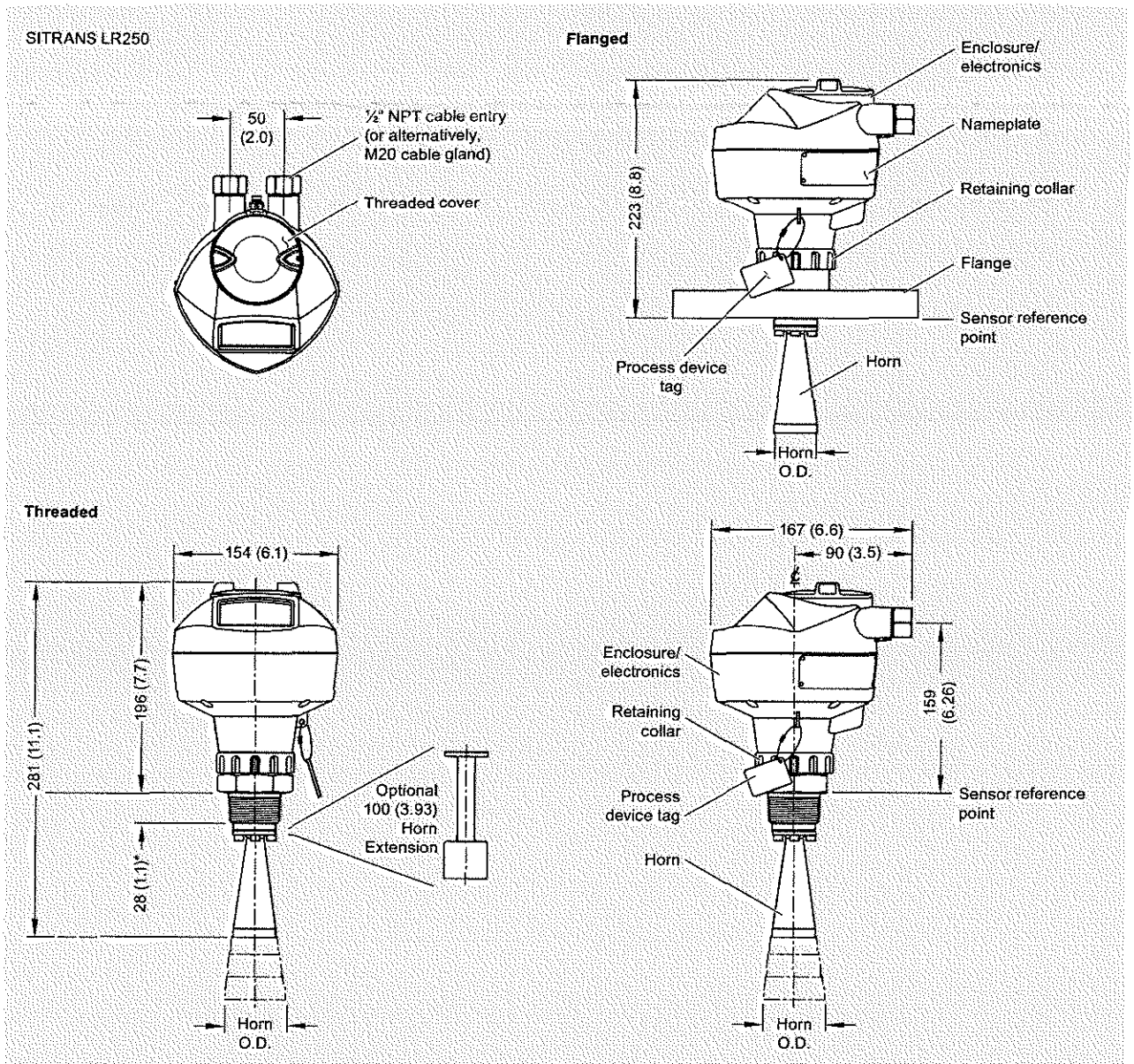

*28 (1.1) for 1.5 inch and 2 inch, 42 (1.65) for 3 inch

Antenna Type	Antenna O.D.	Height to sensor reference point			Beam angle	Measurement range
		1-1/2" threaded connection	2" threaded connection	3" threaded connection		
1.5" horn	39.8 (1.57)	135 (5.3)	N/A	N/A	19 degrees	10 m (32.8 ft)
2" horn	47.8 (1.88)	N/A	166 (6.55)	180 (7.09)	15 degrees	20 m (65.6 ft)
3" horn	74.8 (2.94)	N/A	199 (7.85)	213 (8.39)	10 degrees	20 m (65.6 ft)
4" horn	94.8 (3.73)	N/A	254 (10)	268 (10.55)	8 degrees	20 m (65.6 ft)

SITRANS LR250, dimensions in mm (inch)

© Siemens AG 2012

Schematics

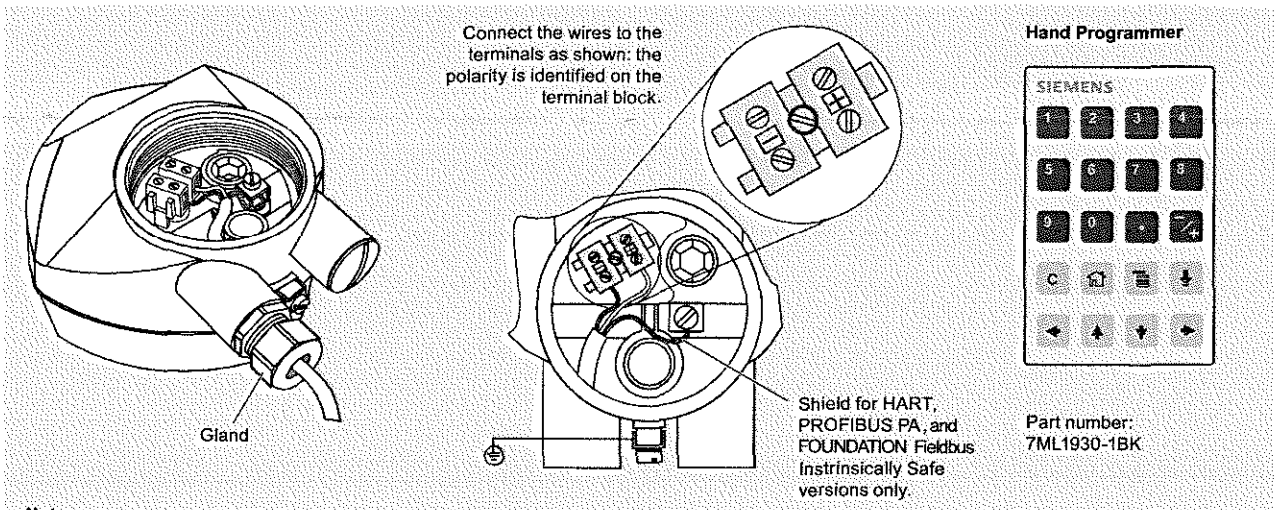

Notes:

1. DC terminal shall be supplied from a source providing electrical isolation between the input and output, to meet the applicable safety requirements of IEC 61010-1.
2. All field wiring must have insulation suitable for rated input voltages.
3. Use shielded twisted pair cable (14 ... 22 AWG) for HART version.
4. Separate cables and conduit may be required to conform to standard instrumentation wiring practices or electrical codes.

SITRANS LR250 connections

© Siemens AG 2012

SITRANS LR250 Specials

	Order No.
SITRANS LR250 horn version enclosures (PROFIBUS PA models)	
LR250 horn version enclosure with board stack, NPT cable inlet, approval option A, with PROFIBUS PA communication, no process connection	**A5E01156836**
LR250 horn version enclosure with board stack, M20 cable inlet, approval option A, with PROFIBUS PA communication, no process connection	**A5E01156838**
LR250 horn version enclosure with board stack, NPT cable inlet, approval option B, with PROFIBUS PA communication, no process connection	**A5E01156839**
LR250 horn version enclosure with board stack, M20 cable inlet, approval option B, with PROFIBUS PA communication, no process connection	**A5E01156841**
LR250 horn version enclosure with board stack, NPT cable inlet, approval option C, with PROFIBUS PA communication, no process connection	**A5E01156843**
LR250 horn version enclosure with board stack, M20 cable inlet, approval option C, with PROFIBUS PA communication, no process connection	**A5E01156844**
LR250 horn version enclosure with board stack, M20 cable inlet, approval option C, with PROFIBUS PA communication, no process connection	**A5E01156846**
LR250 horn version enclosure with board stack, M20 cable inlet, approval option D, with PROFIBUS PA communication, no process connection	**A5E01156848**
LR250 enclosure with board stack, NPT cable inlet, approval option B, with FOUNDATION FIELDBUS communication, no process connection	**A5E03769538**
LR250 enclosure with board stack, NPT cable inlet, approval option D, with FOUNDATION FIELDBUS communication, no process connection	**A5E03769539**
LR250 enclosure with board stack, M20 cable inlet, approval option E, with FOUNDATION FIELDBUS communication, no process connection	**A5E03769543**
SITRANS LR250 horn version enclosures (FOUNDATION Fieldbus models)	
LR250 horn version enclosure with board stack, M20 cable inlet, approval option C, with FOUNDATION Fieldbus communication, no process connection	**A5E02654608**
LR250 horn version enclosure with board stack, NPT cable inlet, approval option A, with FOUNDATION Fieldbus communication, no process connection	**A5E02653792**
LR250 horn version enclosure with board stack, M20 cable inlet, approval option A, with FOUNDATION Fieldbus communication, no process connection	**A5E02653793**
LR250 horn version enclosure with board stack, NPT cable inlet, approval option C, with FOUNDATION Fieldbus communication, no process connection	**A5E02654606**

SITRANS LR250 Specials

	Order No.
SITRANS LR250 horn version enclosures (< 3.6 mA start-up HART)	
SITRANS LR250 horn version enclosure with board stack, M20 cable inlet, approval option A, with HART communication start-up at < 3.6 mA, no process connection	**A5E02956317**
SITRANS LR250 horn version enclosure with board stack, M20 cable inlet, approval option C, with HART communication start-up at < 3.6 mA, no process connection	**A5E02956319**
SITRANS LR250 horn version enclosure with board stack, M20 cable inlet, approval option E, with HART communication start-up at < 3.6 mA, no process connection	**A5E02956320**
SITRANS LR250 horn version enclosure with board stack, M20 cable inlet, approval option F, with HART communication start-up at < 3.6 mA, no process connection	**A5E02956322**
SITRANS LR250 horn version enclosure with board stack, M20 cable inlet, approval option G, with HART communication start-up at < 3.6 mA, no process connection	**A5E02956323**
LR250 horn version enclosure with board stack, NPT cable inlet, approval option A, with HART communication start-up at < 3.6 mA, no process connection	**A5E03441096**
LR250 horn version enclosure with board stack, NPT cable inlet, approval option B, with HART communication start-up at < 3.6 mA, no process connection	**A5E03441097**
LR250 horn version enclosure with board stack, NPT cable inlet, approval option D, with HART communication start-up at < 3.6 mA, no process connection	**A5E03441098**
LR250 horn version enclosure with board stack, NPT cable inlet, approval option H, with HART communication start-up at < 3.6 mA, no process connection	**A5E03441099**
SITRANS LR250 horn antenna and extension kits	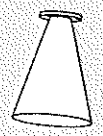
38 mm (1.5 inch) horn antenna kit, 1.5" Process Connections only	**A5E01151539**
100 mm (4 inch) horn antenna extension kit, 1.5" Process Connections only	**A5E01151553**
50 mm (2 inch) stainless steel 316L horn antenna kit	**A5E01151569**
75 mm (3 inch) stainless steel 316L horn antenna kit	**A5E01151571**
100 mm (4 inch) stainless steel 316L horn antenna kit	**A5E01151573**
100 mm (4 inch) horn antenna extension kit, 50 mm (2 inch), 75 mm (3 inch) and 100 mm (4 inch) process connection	**A5E01151577**
50 mm (2 inch) horn antenna kit, Hastelloy C-22	**A5E01151584**
75 mm (3 inch) horn antenna kit, Hastelloy C-22	**A5E01151585**
100 mm (4 inch) horn antenna kit, Hastelloy C-22	**A5E01151587**
5 Dupont 1Gr Polyback, PTFE grease kit	**A5E01151626**
LR250 lid with O-ring	**A5E02465410**

Please contact ceg.smpi@siemens.com for special requests.

© Siemens AG 2012

SITRANS LR250 threaded PVDF Antenna

Overview

SITRANS LR250 with threaded PVDF antenna is a 2-wire, 25 GHz pulse radar level transmitter for continuous monitoring of liquids and slurries in storage and process vessels including corrosives or aggressive materials, to a range of 10 m (32.8 ft).

Benefits

- Fully insulated PVDF antenna design for use in chemical and sanitary environments where aggressive and corrosive materials are used
- Cost effective replacement for transmitters made of exotic materials
- Graphical local user interface (LUI) makes operation simple with plug-and-play setup using the intuitive Quick Start Wizard
- LUI displays echo profiles for diagnostic support
- 25 GHz high frequency and 2 inch (50 mm) process connection/antenna allow for easy mounting in nozzles
- Insensitive to mounting location and obstructions, and less sensitive to nozzle interference
- Short blanking distance for improved minimum measuring range to 50 mm (2 inch) from the end of the antenna
- Communication using HART or PROFIBUS PA, or FOUNDATION Fieldbus
- Process Intelligence signal processing for improved measurement reliability and Auto False-Echo Suppression of fixed obstructions
- Programming using infrared Intrinsically Safe handheld programmer or over a network using SIMATIC PDM, Emerson AMS, or Field Device Tools, such as PACTware or Fieldcare via SITRANS DTM.
- Suitable for use in Safety Related Systems in accordance with IEC 61508/61511 (SIL-2)
- 3 mm (0.118 inch) accuracy in accordance with IEC 60770-1

Application

SITRANS LR250 includes a graphical local user interface (LUI) that improves setup and operation by including an intuitive Quick Start Wizard, and echo profile displays for diagnostic support. Startup is easy using the Quick Start wizard with a few parameters required for basic operation.

The 25 GHz frequency creates a narrow, focused beam allowing for smaller antenna options and decreasing sensitivity to obstructions.

SITRANS LR250's unique design allows safe and simple programming using the Intrinsically Safe handheld programmer without having to open the instrument's lid.

SITRANS LR250 measures superbly in small vessels and in tanks/vessels up to 10 m (32 ft) on materials with dk > 3.

- Key Applications: liquid bulk storage tanks, process vessels with agitators, vaporous liquids, temperatures to 80 °C (176° F), corrosive and aggressive materials, media with dielectric (dk) ≥ 3 (application dependent) and applications requiring functional safety

© Siemens AG 2012

Configuration

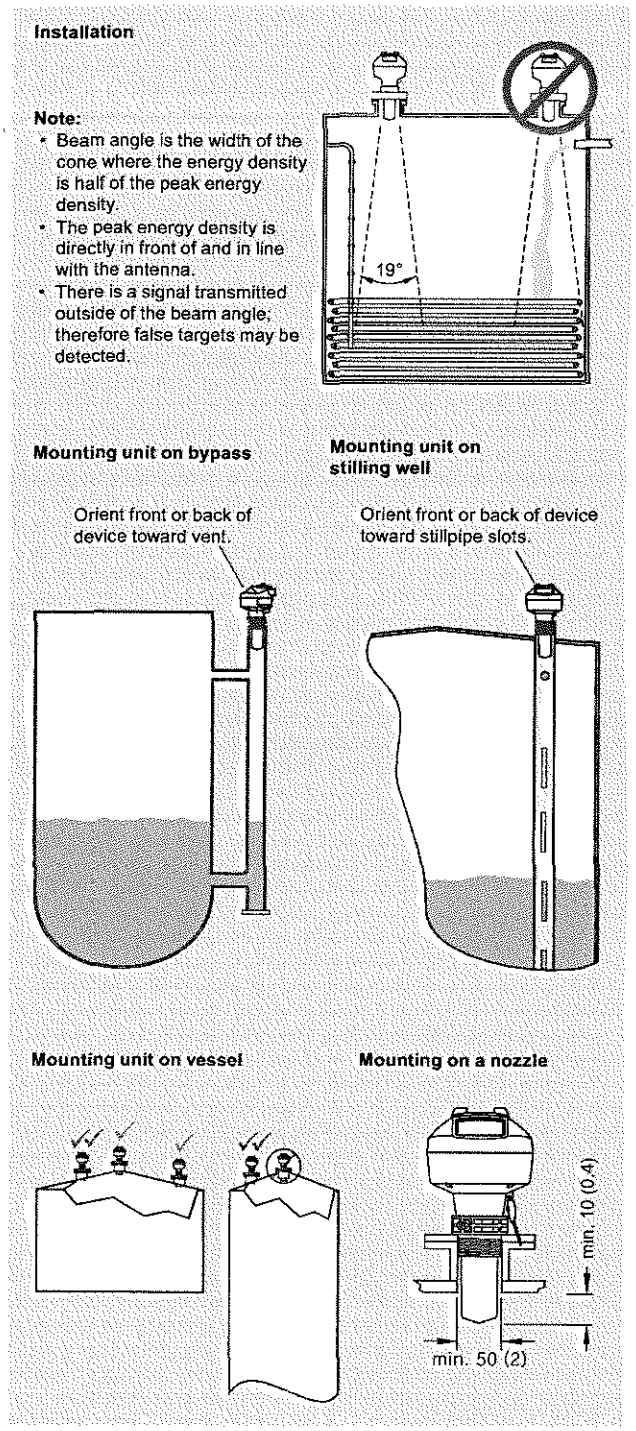

SITRANS LR250 PVDF antenna installation, dimensions in mm (inch)

© Siemens AG 2012

Technical specifications

Mode of operation	
Measuring principle	Radar level measurement
Frequency	K-band (25.0 GHz)
Minimum measuring range	50 mm (2 inch) from end of antenna
Maximum measuring range	10 m (32.8 ft)
Output	
HART	Version 5.1
• Analog output	4 ... 20 mA
• Accuracy	± 0.02 mA
• Fail-safe	• Programmable as high low or hold (loss of echo) • NE 43 programmable
PROFIBUS PA	Profile 3.1
• Function blocks	2 Analog Input (AI)
FOUNDATION Fieldbus	H1
• Functionality	Basic or LAS
• Version	ITK 5.2.0
• Function blocks	2 Analog Input (AI)
Performance (according to reference conditions IEC60770-1)	
Maximum measured error	• > 500 mm from sensor reference point: 3 mm (0.118 inch) • < 500 mm from sensor reference point: 25 mm (1 inch)
Influence of ambient temperature	< 0.003 %/K
Rated operating conditions	
Installation conditions	
Location	Indoor/outdoor
Ambient conditions (enclosure)	
Ambient temperature	-40 ... +80 °C (-40 ... +176 °F)
Installation category	I
Pollution degree	4
Medium conditions	
Dielectric constant ε_r	≥ 3 (1.6 in stillpipe)
Process temperature	-40 ... +80 °C (-40 ... +176 °F) at process connection (Is suitable for CIP at 120 °C for 1/2 hr max.)
Process pressure	Up to 5 bar g (72 psi g) temperature dependent. See Pressure/Temperature curves for more information (page 4/246)
Design	
Enclosure	
• Material	Aluminum, polyester powder-coated
• Cable inlet	2 x M20x1.5 or 2 x ½" NPT
Degree of protection	Type 4X/NEMA 4X, Type 6/NEMA 6, IP67, IP68
Weight	approximately 3.3 kg (7.27 lb)
Display (local)	Graphic local user interface including quick start wizard and echo profile display
Antenna	
• Material	PVDF (Polyvinylidene fluoride)
• Dimensions (nominal sizes)	2 inch (48 mm)
Process connections	
Threaded connection	2" NPT [(Taper), ASME B1.20.1] 2" [(BSPT), EN 10226] 2" [(BSPP), EN ISO 228-1]

Power supply	
4 ... 20 mA/HART	Nominal 24 V DC (max. 30 V DC) with max. 550 Ω
PROFIBUS PA	• 15 mA • per IEC 61158-2
FOUNDATION Fieldbus	• 20.0 mA • per IEC 61158-2
Certificates and approvals	
General	CSAUS/C, CE, FM, NE 21, C-TICK
Radio	FCC, Industry Canada and Europe ETSI EN 302-372, C-TICK
Hazardous	
• Explosion Proof (Brazil)	INMETRO Ex d ia mb IIC T4 Ga/Gb, Ex ia ta IIIC T90 °C Da IP67
• Increased Safety (Brazil)	INMETRO Ex e ia mb IIC T4 Ga/Gb, Ex ia ta IIIC T90 °C Da IP67
• Intrinsically Safe (Brazil)	INMETRO Ex ia IIC T4 Ga, Ex ia ta IIIC T90 °C Da IP67
• Explosion Proof (Canada/USA)	CSA/FM Class I, Div. 1, Groups A, B, C, D; Class II, Div. 1, Groups E, F, G; Class III T4
• Intrinsically Safe (Canada/USA)	CSA/FM Class I, Div. 1, Groups A, B, C, D; Class II, Div. 1, Groups E, F, G; Class III T4
• Non-incendive (Canada/USA)	CSA/FM Class I, Div. 2, Groups A, B, C, D T5
• Increased Safety/Flame Proof (China)	NEPSI Ex dmbia IIC T4/ Ex embia IIC T4/ DIP A20 TA, T90 °C IP67
• Intrinsically Safe (China)	NEPSI Ex ia IIC T4/DIP A20 T_a T90 °C IP67
• Non-sparking/Energy Limited (China)	NEPSI Ex nA/nL IIC T4
• Intrinsically Safe (Europe)	ATEX II 1G EEx ia IIC T4 ATEX II 1D Ex iaD 20 tD A20 IP67 T90 °C
• Non-sparking/Energy Limited (Europe)	ATEX II 3G EEx nA/nL IIC T4 Gc
• Flame Proof (International/Europe)	IECEx/ATEX II 1/2 GD, 1D, 2D, Ex dmbia IIC T4 Ga/Gb, Ex iaD 20 tD A20 IP67 T90 °C
• Increased Safety (International/Europe)	IECEx/ATEX II 1/2 GD, 1D, 2D, Ex embia IIC T4 Ga/Gb, Ex iaD 20 tD A20 IP67 T90 °C
• Intrinsically Safe (International)	IECEx Ex ia IIC T4, Ex iaD 20 tD A20 IP67 T90 °C
• Explosion Proof (Russia)	GOST-R Ex d
• Increased Safety (Russia)	GOST-R Ex e
• Intrinsically Safe (Russia)	GOST-R Ex ia
Programming	
Intrinsically Safe Siemens handheld programmer	Infrared receiver
• Approvals for handheld-programmer	IS model: ATEX II 1 GD Ex ia IIC T4 Ga Ex ia D 20 T135 °C Ta = -20 ... +50 °C CSA/FM Class I, II, III, Div. 1, Groups A, B, C, D, E, F, G, T6 Ta = 50 °C IECEx SIR 09.0073
Handheld communicator	HART communicator 375/475
PC	• SIMATIC PDM • Emerson AMS • SITRANS DTM (for connection into FDT, such as PACTware or Fieldcare)
Display (local)	Graphic local user interface including quick start wizard and echo profile displays

© Siemens AG 2012

Selection and Ordering data	Order No.
SITRANS LR250 threaded PVDF antenna	**7ML5431-**
2-wire, 25 GHz pulse radar level transmitter for continuous monitoring of liquids and slurries in storage and process vessels including corrosives or aggresive materials, to a range of 10 m (32.8 ft).	■■■■0 - ■■■■
Process Connection and Antenna Material	
Threaded PVDF antenna	4
Process Connection Type	
Threaded connections PVDF	
2" NPT (ASME B1.20.1) (tapered thread)	P A
R 2" [(BSPT), EN 10226-1] (tapered thread)	P B
G 2" [(BSPP), EN ISO 228-1] (parallel thread)	P C
Communication/Output	
PROFIBUS PA	1
4 ... 20 mA, HART, startup at < 3.6 mA	2
FOUNDATION Fieldbus	3
Enclosure/Cable inlet	
Aluminum, Epoxy painted	
2 x ½" NPT	0
2 x M20x1.5	1
Antenna	
2 inch(50 mm) threaded PVDF antenna	R
Approvals	
General Purpose, CE, CSA, FM, FCC, R&TTE, C-TICK	A
Intrinsically Safe, CSA/FM Class I, II, III, Div. 1, Groups A, B, C, D, E, F, G, Industry Canada FCC	B
Intrinsically Safe, IECEx/ATEX II 1 GD Ex ia IIC T4, Ex iaD 20 tD A20 IP67 T90 °C, INMETRO Ex ia IIC T4 Ga, Ex ta IIIC T90 °C Da IP67, CE, R&TTE, C-TICK	C
Non-incendive, CSA/FM Class I, Div. 2, Groups A, B, C, D, FCC	D
Non-sparking, Energy Limited, ATEX II 3G Ex nA/nL IIC T4, CE, R&TTE, C-TICK	E
Increased Safety, IECEx/ATEX II 1/2 GD Ex embia IIC T4, Ex iaD 20 tD A20 IP67 T90 °C, INMETRO Ex e ia mb IIC T4 Ga/Gb, Ex tb IIIC T90 °C Db IP67, CE, R&TTE, C-TICK[1]	F
Flame Proof, IECEx/ATEX II 1/2 GD Ex dmbia IIC T4, Ex iaD 20 tD A20 IP67 T90 °C, INMETRO Ex d ia mb IIC T4 Ga/Gb, Ex tb IIIC T90 °C Db IP67, CE, R&TTE, C-TICK[1]	G
Explosion Proof CSA/FM Class I, II, III, Div. 1, Gr. A, B, C, D, E, F, G, Industry Canada FCC[1]	H
Pressure rating	
Rating per Pressure/Temperature curves in manual	2

[1] Applicable to Communication option 2 only

Selection and Ordering data	Order code
Further designs	
Please add **"-Z"** to Order No. and specify Order code(s).	
Plug M12 with mating Connector[1)2)3)]	**A50**
Plug 7/8" with mating Connector[2)3)4)]	**A55**
Stainless steel tag [69 x 50 mm (2.71 x 1.97 inch)]: Measuring-point number/identification (max. 27 characters); specify in plain text	**Y15**
Manufacturer's test certificate: M to DIN 55350, Part 18 and to ISO 9000	**C11**
Inspection Certificate Type 3.1 per EN 10204	**C12**
Functional Safety - SIL2 suitable in accordance with IEC 61508/61511[5) 6)]	**C20**
Namur NE43 compliant, device preset to failsafe < 3.6 mA[5)]	**N07**
Operating Instructions for HART/mA device	Order No.
English	**7ML1998-5JE05**
German	**7ML1998-5JE34**
Note: The Operating Instructions should be ordered as a separate line item on the order.	
Multi-language Quick Start manual This device is shipped with the Siemens Milltronics manual CD containing the complete ATEX Quick Start and Operating Instructions library.	**7ML1998-5QX83**
Operating Instructions for PROFIBUS PA device	
English	**7ML1998-5JF05**
German	**7ML1998-5JF34**
Note: The Operating Instructions should be ordered as a separate line item on the order.	
Multi-language Quick Start manual This device is shipped with the Siemens Milltronics manual CD containing the complete ATEX Quick Start and Operating Instructions library.	**7ML1998-5XE83**
Operating Instructions for FOUNDATION Fieldbus device	
English	**7ML1998-5KL03**
German	**7ML1998-5KL32**
Note: The Operating Instructions should be ordered as a separate line item on the order.	
Multi-language Quick Start manual This device is shipped with the Siemens Milltronics manual CD containing the complete ATEX Quick Start and Operating Instructions library.	**7ML1998-5XN82**

© Siemens AG 2012

SITRANS LR250 threaded PVDF Antenna

Selection and Ordering data	Order code
Accessories	
Handheld programmer, Intrinsically safe, EEx ia	**7ML1930-1BK**
HART modem/RS 232 (for use with a PC and SIMATIC PDM)	**7MF4997-1DA**
HART modem/USB (for use with a PC and SIMATIC PDM)	**7MF4997-1DB**
One metallic cable gland M20x1.5, rated -40 ... +80 °C (-40 ... +176 °F), HART	**7ML1930-1AP**
One metallic cable gland M20x1.5, rated -40 ... +80 °C (-40 ... +176 °F), PROFIBUS PA and FOUNDATION Fieldbus[7]	**7ML1930-1AQ**
FDA approved FKM o-ring for 2" G (BSPP) process connections -28 ... +80 °C (-28 ... +176 °F)	**7ML1830-3AN**
SITRANS RD100 Remote display - see Chapter 7	
SITRANS RD200 Remote display - see Chapter 7	
SITRANS RD500 web, datalogging, alarming, ethernet, and modem support for instrumentation - see Chapter 7	**7ML5750-1AA00-0**

1) Available with Enclosure option 1 only
2) To be used with Communication options 1 and 3 only. Connector has IP67 rating.
3) Available with approval options A and B. Available with approval option C for use on intrinsically safe applications only. Not rated for dust Ex.
4) Available with Enclosure option 0 only
5) Applicable to Communication option 2 only
6) Available with Approval options A to E only
7) For use with Communication option 1 and 3 only

Characteristic curves

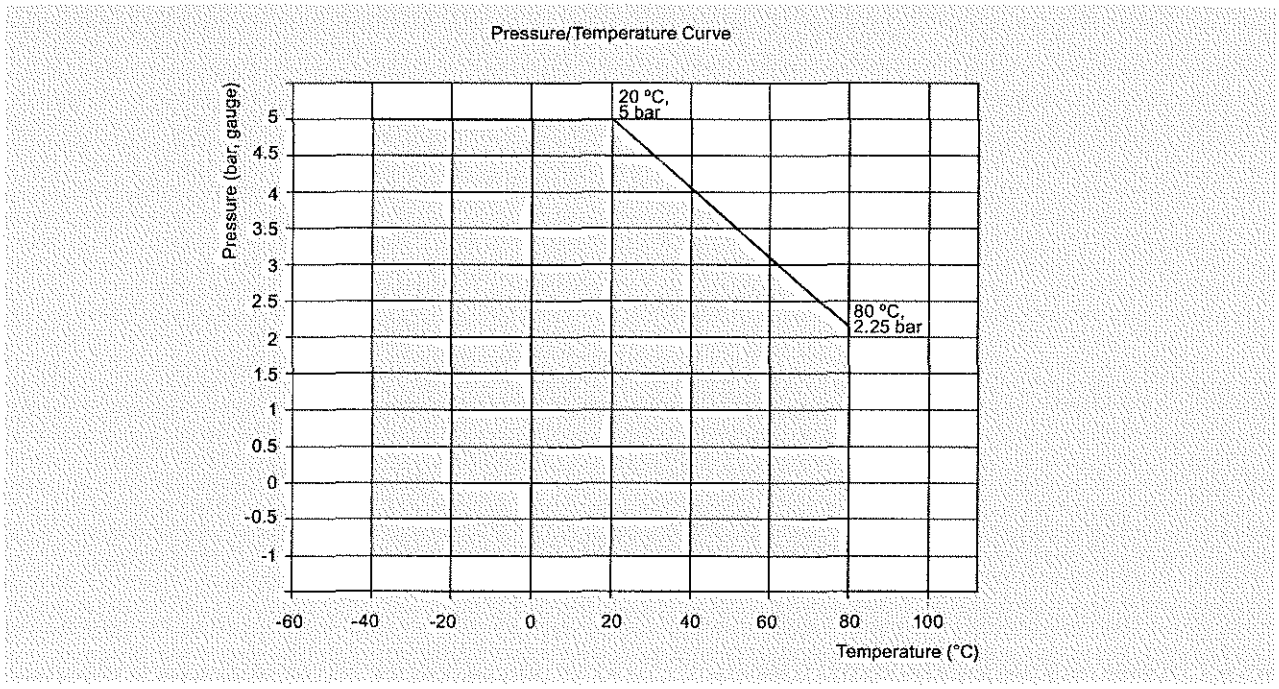

SITRANS LR250 PVDF antenna pressure/temperature curve

© Siemens AG 2012

Dimensional drawings

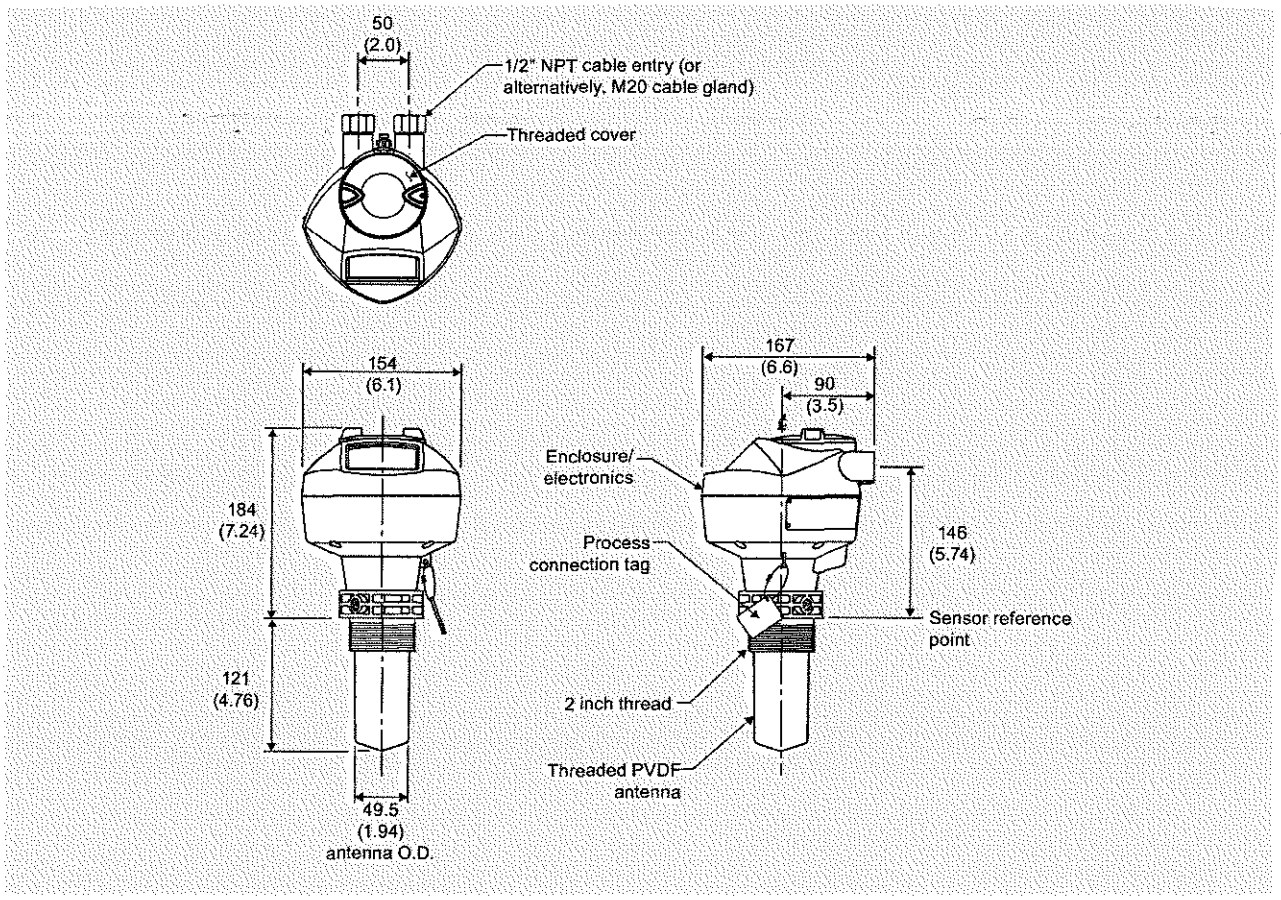

SITRANS LR250 PVDF antenna, dimensions in mm (inch)

Schematics

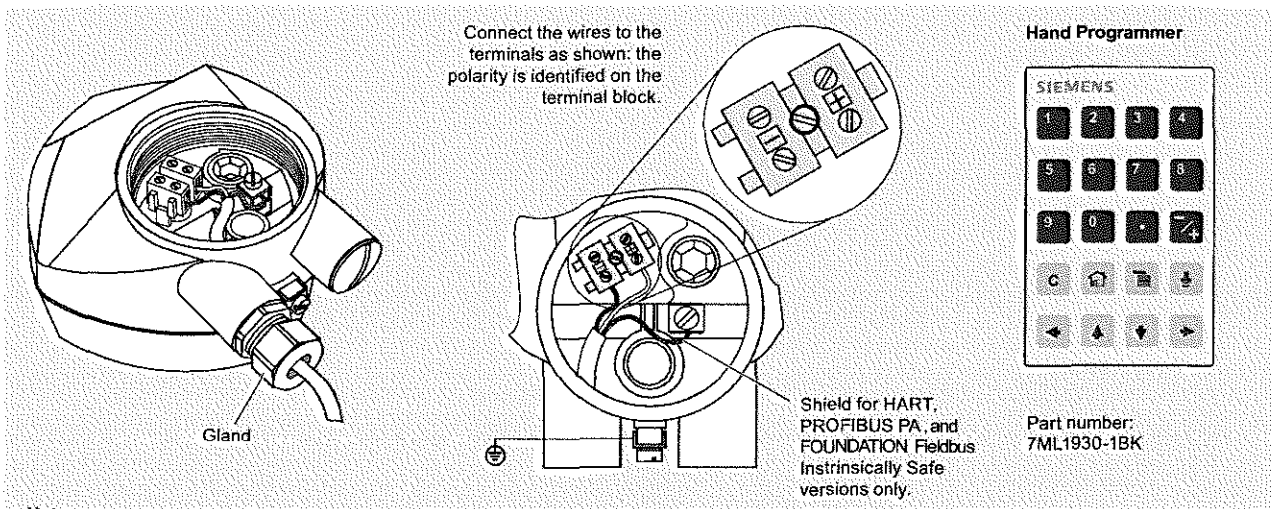

Notes:

1. DC terminal shall be supplied from a source providing electrical isolation between the input and output, to meet the applicable safety requirements of IEC 61010-1.
2. All field wiring must have insulation suitable for rated input voltages.
3. Use shielded twisted pair cable (14 ... 22 AWG) for HART version.
4. Separate cables and conduit may be required to conform to standard instrumentation wiring practices or electrical codes.

SITRANS LR250 connections

© Siemens AG 2012

SITRANS LR250 threaded PVDF Specials	Order No.
SITRANS LR250 threaded PVDF antenna version enclosures (PROFIBUS PA models)	
LR250 threaded PVDF antenna version enclosure with board stack, M20 cable inlet, approval option A, with PROFIBUS PA communication, no process connection	**A5E03588171**
LR250 threaded PVDF antenna version enclosure with board stack, NPT cable inlet, approval option A, with PROFIBUS PA communication, no process connection	**A5E03588253**
LR250 threaded PVDF antenna version enclosure with board stack, NPT cable inlet, approval option B, with PROFIBUS PA communication, no process connection	**A5E03588512**
LR250 threaded PVDF antenna version enclosure with board stack, M20 cable inlet, approval option C, with PROFIBUS PA communication, no process connection	**A5E03589260**
LR250 threaded PVDF antenna version enclosure with board stack, NPT cable inlet, approval option D, with PROFIBUS PA communication, no process connection	**A5E03589262**
LR250 threaded PVDF antenna version enclosure with board stack, M20 cable inlet, approval option E, with PROFIBUS PA communication, no process connection	**A5E03589264**
SITRANS LR250 threaded PVDF antenna version enclosures (FOUNDATION Fieldbus models)	
LR250 enclosure with board stack, M20 cable inlet, approval option A, with FOUNDATION Fieldbus communication, no process connection	**A5E03589266**
LR250 enclosure with board stack, NPT cable inlet, approval option A, with FOUNDATION Fieldbus communication, no process connection	**A5E03589275**
LR250 enclosure with board stack, NPT cable inlet, approval option B, with FOUNDATION Fieldbus communication, no process connection	**A5E03589277**
LR250 enclosure with board stack, M20 cable inlet, approval option C, with FOUNDATION Fieldbus communication, no process connection	**A5E03589280**
LR250 enclosure with board stack, NPT cable inlet, approval option D, with FOUNDATION Fieldbus communication, no process connection	**A5E03589281**
LR250 enclosure with board stack, M20 cable inlet, approval option E, with FOUNDATION Fieldbus communication, no process connection	**A5E03589283**

SITRANS LR250 threaded PVDF Specials	Order No.
SITRANS LR250 threaded PVDF antenna version enclosures (< 3.6 mA start-up HART models)	
LR250 enclosure with board stack, M20 cable inlet, approval option A, with HART communication start-up at < 3.6 mA, no process connection	**A5E03569747**
LR250 enclosure with board stack, NPT cable inlet, approval option A, with HART communication start-up at < 3.6 mA, no process connection	**A5E03586807**
LR250 enclosure with board stack, NPT cable inlet, approval option B, with HART communication start-up at < 3.6 mA, no process connection	**A5E03586854**
LR250 enclosure with board stack, M20 cable inlet, approval option C, with HART communication start-up at < 3.6 mA, no process connection	**A5E03586887**
LR250 enclosure with board stack, NPT cable inlet, approval option D, with HART communication start-up at < 3.6 mA, no process connection	**A5E03586961**
LR250 enclosure with board stack, M20 cable inlet, approval option E, with HART communication start-up at < 3.6 mA, no process connection	**A5E03587012**
LR250 enclosure with board stack, M20 cable inlet, approval option F, with HART communication start-up at < 3.6 mA, no process connection	**A5E03587132**
LR250 enclosure with board stack, M20 cable inlet, approval option G, with HART communication start-up at < 3.6 mA, no process connection	**A5E03587223**
LR250 enclosure with board stack, NPT cable inlet, approval option H, with HART communication start-up at < 3.6 mA, no process connection	**A5E03588125**
SITRANS LR250 threaded PVDF antenna kits	
Antenna kit 2" NPT threaded PVDF	**A5E03528941**
Antenna kit 2" R (BSPT) threaded PVDF	**A5E03528943**
Antenna kit 2" G (BSPP) threaded PVDF	**A5E03528947**
Kit of hardware parts for LR250 threaded PVDF antenna: consists of O-rings, screws, wave-washer and loctite	**A5E03528948**

© Siemens AG 2012

Overview

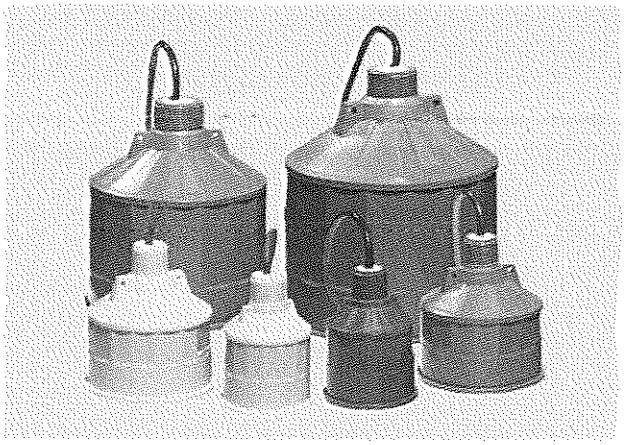

EchoMax XPS/XCT transducers use ultrasonic technology to measure level in a wide range of liquids and solids.

Benefits

- Integral temperature compensation
- Low ringing effect reduces blanking distance
- Optional foam facing for dusty applications
- Self-cleaning and low-maintenance
- Chemically resistant
- Hermetically sealed

Application

The transducers can be fully immersed, are resistant to steam and corrosive chemicals, and can be installed without flanges.

The XPS series offers versions for various measuring ranges up to 40 m (130 ft) and up to a max. temperature of 95 °C (203 °F).

The XCT series can be used in applications at higher temperatures to measure level up to a distance of 12 m (40 ft) and at a max. temperature of 95 °C (203 °F).

During operation, the EchoMax transducers emit acoustic pulses in a narrow beam. The level monitor measures the propagation time between pulse emission and its reflection (echo) to calculate the distance.

© Siemens AG 2012

Technical specifications

Input	XPS-10 (standard and F models)	XPS-15 (standard and F models)	XPS-30	XPS-40	XCT-8 (standard and sanitary models)	XCT-12
Measuring range	0.3 ... 10 m (1 ... 33 ft)	Standard: 0.3 ... 15 m (1 ... 50 ft) Flanged: 0.45 ... 15 m (1.5 ... 50 ft)	0.6 ... 30 m (2 ... 100 ft)	0.9 ... 40 m (3 ... 130 ft)	0.6 ... 8 m (2 ... 26 ft)	0.6 ... 12 m (2 ... 40 ft)
Output						
Frequency	44 kHz	44 kHz	30 kHz	22 kHz	44 kHz	44 kHz
Beam angle	12°	6°	6°	6°	12°	6°
Environmental						
Location	Indoors/outdoors					
Ambient temperature	Standard: -40 ... +95 °C (-40 ... +203 °F) F: -20 ... +95 °C (-4 ... +203 °F)				Standard: -40 ... +145 °C (-40 ... +293 °F) Sanitary: -40 ... +125 °C (-40 ... +260 °F)	-40 ... +145 °C (-40 ... +293 °F)
Pollution degree	4					
Pressure	8 bar g (120 psi g) Flanged: 0.5 bar g (7.25 psi g)	8 bar g (120 psi g) Flanged: 0.5 bar g (7.25 psi g)	0.5 bar g (7.25 psi g) Flanged: 0.5 bar g (7.25 psi g)	0.5 bar g (7.25 psi g)	Standard: 4 bar g (60 psi g): -40 ... +138 °C (-40 ... +280 °F) Standard: 8 bar g (120 psi g): -40 ... +95 °C (-40 ... +203 °F) Flanged: 0.5 bar g (7.25 psi g) Sanitary: XCT-8: 0.5 bar g (7.25 psi g)	
Design						
Weight	0.8 kg (1.8 lb)	1.3 kg (2.8 lb) Flanged: 2 kg (4.4 lb)	4.3 kg (9.5 lb)	8 kg (18 lb)	0.8 kg (1.7 lb)	1.3 kg (2.8 lb)
Power supply	Operation of transducer only with approved Siemens Milltronics controllers					
Material	Standard: PVDF Flanged: PVDF with CPVC flange Option: PTFE face with CPVC flange	Standard: PVDF Flanged: PVDF with CPVC flange Option: PTFE face with CPVC flange	Standard: PVDF Flanged: PVDF with CPVC flange Option: PTFE face with CPVC flange	PVDF	Standard: PVDF Options: DERAKANE flange; PTFE face with universal PVDF flange	
Color	Standard: blue F: gray	Standard: blue F: gray	blue	blue	white	
Process connection	Standard: 1" NPT or 1" BSPT F: 1" NPT	Standard: 1" NPT or 1" BSPT F: 1" NPT	1.5" universal thread (NPT or BSPT)		1" NPT or R 1" (BSPT), EN 10226	
Degree of protection	IP66/68	IP66/68	IP66/68	IP66/68	IP66/68	IP66/68
Cable	2 wire twisted pair/braided and foil shielded 0.5 mm² (20 AWG) PVC jacket				2 wire twisted pair/braided and foil shielded 0.5 mm² (20 AWG) silicone jacket	
Separation	Max. 365 m (1 200 ft)					
Certificates and approvals	Standard: CE[1], CSA, FM, ATEX II 2GD F: FM Class I, Div 1, Groups A, B, C and D, Class II Div 1, Groups E, F and G, Class III	Standard: CE[1], CSA, FM, ATEX II 2GD F: FM Class I, Div 1, Groups A, B, C and D, Class II Div 1, Groups E, F and G, Class III	CE[1], CSA, FM, ATEX II 2G 1D	CE[1], CSA, FM, ATEX II 2G 1D	Standard: CE[1], CSA, FM, ATEX II 2GD Sanitary: CE, CTICK, $CSA_{US/C}$	CE[1], CSA, FM, ATEX II 2GD

[1] EMC certificate available on request.

© Siemens AG 2012

Selection and Ordering data	Order No.
EchoMax XPS-10 ultrasonic transducer	**7ML1115-**
High-frequency ultrasonic transducer designed for a wide variety of liquid and solid applications, for use with approved controllers. Includes integral temperature sensor. Measuring range: min. 0.3 m, max.10 m	■■■■0
Mounting thread and facing	
1" NPT [(Taper), ANSI/ASME B1.20.1]	0
1" NPT [(Taper), ANSI/ASME B1.20.1] with foam facing[1]	1
1" NPT [(Taper), ANSI/ASME B1.20.1] with PTFE facing[2]	2
R 1" [(BSPT), EN 10226]	3
R 1" [(BSPT), EN 10226] with foam facing[1]	4
R 1" [(BSPT), EN 10226] with PTFE facing[2]	5
Cable length	
5 m (16.40 ft)	B
10 m (32.81 ft)	C
30 m (98.43 ft)	E
50 m (164.04 ft)	F
100 m (328.08 ft)	K
Mounting flange	
None	A
3" ASME, 150 lb, flat faced	C
4" ASME, 150 lb, flat faced	D
6" ASME, 150 lb, flat faced	E
8" ASME, 150 lb, flat faced	F
DN 80, PN 10/16, Type A, flat faced	G
DN 100, PN 10/16, Type A, flat faced	J
DN 150, PN 10/16, Type A, flat faced	L
JIS10K3B Style	M
JIS10K4B Style	P
JIS10K6B Style	R
(Note: Flange bolting patterns and facings dimensionally correspond to the applicable ASME B16.5 or EN 1092-1, or JIS B 2220 standard.)	
Approvals	
ATEX II 2 GD, FM Class I Div. 2, SAA Class I Zone 1	3
CSA Class I Div. 1[3]	4

1) Not available with flanged versions
2) Available with flanged versions only
3) Valid with mounting thread and facing options 0 ... 2 only

Selection and Ordering data	Order code
Further designs	
Please add **"-Z"** to Order No. and specify Order code(s).	
Stainless steel tag [69 x 50 mm (2.71 x 1.97 inch)]: Measuring point number/ identification (max. 27 characters) specify in plain text	**Y15**
Operating Instructions	Order No.
Quick Start guide, multi-language	**7ML1998-5QM82**
Applications Guidelines, multi-language Note: The Applications Guidelines should be ordered as a separate line item on the order.	**7ML1998-5HV61**
This device is shipped with the Siemens Milltronics manual CD containing the complete ATEX Quick Start and Operating Instructions library.	
Accessories	
Tag, stainless steel with hole, 12 x 45 mm (0.47 x 1.77 inch), one text line for fastening on sensors	**7ML1930-1BJ**
Submergence shield kit	**7ML1830-1BH**
Easy Aimer 2, with ¾" x 1" NPT PVC coupling	**7ML1830-1AQ**
Easy Aimer 2, aluminum with M20 adapter and 1" and 1½" BSPT aluminum couplings	**7ML1830-1AX**
Easy Aimer 304, with stainless steel coupling	**7ML1830-1AU**
Easy Aimer 304, with M20 adapter and 1" and 1½" BSPT 304 SS couplings	**7ML1830-1GN**
Universal box bracket, mounting kit	**7ML1830-1BK**
Channel bracket, wall mount	**7ML1830-1BL**
Extended channel bracket, wall mount	**7ML1830-1BM**
Channel bracket, floor mount	**7ML1830-1BN**
Extended channel bracket, floor mount	**7ML1830-1BP**
Bridge channel bracket, floor mount (see Mounting Brackets on page 4/204 for more information)	**7ML1830-1BQ**
1" NPT locknut, plastic	**7ML1830-1DS**
1" BSPT locknut, plastic	**7ML1830-1DR**

© Siemens AG 2012

Selection and Ordering data	Order No.
EchoMax XPS-10F ultrasonic transducer High-frequency ultrasonic transducer designed for a wide variety of liquid and solid applications, for use with approved controllers. Includes integral temperature sensor. Measuring range: min. 0.3 m, max.10 m	**7ML1170-** ■■■■0
Mounting thread and facing	
1" NPT [(Taper), ANSI/ASME B1.20.1]	1
Cable length	
5 m (16.40 ft)	B
10 m (32.81 ft)	C
30 m (98.43 ft)	D
50 m (164.04 ft)	E
100 m (328.08 ft)	F
Mounting flange, flush mount	
None	A
3" ASME, 150 lb, flat faced	B
4" ASME, 150 lb, flat faced	C
6" ASME, 150 lb, flat faced	D
8" ASME , 150 lb, flat faced (Note: Flange bolting patterns and facings dimensionally correspond to the applicable ASME B16.5, or EN 1092-1, or JIS B 2220 standard.)	E
Approvals	
FM Class I Div. 1	1

Selection and Ordering data	Order code
Further designs Please add "**-Z**" to Order No. and specify Order code(s).	
Stainless steel tag [69 x 50 mm (2.71 x 1.97 inch)]: Measuring point number/ identification (max. 27 characters) specify in plain text	**Y15**
Operating Instructions	Order No.
Quick Start guide, multi-language	**7ML1998-1DU01**
Applications Guidelines, multi-language Note: The Applications Guidelines should be ordered as a separate line item on the order.	**7ML1998-5HV61**
This device is shipped with the Siemens Milltronics manual CD containing the complete ATEX Quick Start and Operating Instructions library.	
Accessories	
Tag, stainless steel with hole, 12 x 45 mm (0.47 x 1.77 inch), one text line for fastening on sensors	**7ML1930-1BJ**
Submergence shield kit	**7ML1830-1BH**
Easy Aimer 2, with ¾" x 1" NPT PVC coupling	**7ML1830-1AQ**
Easy Aimer 304, with stainless steel coupling	**7ML1830-1AU**
Universal box bracket, mounting kit	**7ML1830-1BK**
Channel bracket, wall mount	**7ML1830-1BL**
Extended channel bracket, wall mount	**7ML1830-1BM**
Channel bracket, floor mount	**7ML1830-1BN**
Extended channel bracket, floor mount	**7ML1830-1BP**
Bridge channel bracket, floor mount (see Mounting Brackets on page 4/204 for more information)	**7ML1830-1BQ**
1" NPT locknut, plastic	**7ML1830-1DS**

© Siemens AG 2012

Selection and Ordering data	Order No.
EchoMax XPS-15 ultrasonic transducer High-frequency ultrasonic transducer designed for a wide variety of liquid and solid applications, for use with approved controllers. Includes integral temperature sensor. Measuring range: min. 0.3 m, max. 15 m	**7ML1118-** ■■■■0
Mounting thread and facing	
1" NPT [(Taper), ANSI/ASME B1.20.1]	**0**
1" NPT [(Taper), ANSI/ASME B1.20.1] with foam facing[1]	**1**
1" NPT [(Taper), ANSI/ASME B1.20.1] with PTFE facing[2]	**2**
R 1" [(BSPT), EN 10226]	**3**
R 1" [(BSPT), EN 10226] with foam facing[1]	**4**
R 1" [(BSPT), EN 10226] with PTFE facing[2]	**5**
Cable length	
5 m (16.40 ft)	**B**
10 m (32.81 ft)	**C**
30 m (98.43 ft)	**E**
50 m (164.04 ft)	**F**
100 m (328.08 ft)	**K**
Mounting flange	
None	**A**
6" ASME, 150 lb, flat faced	**D**
8" ASME, 150 lb, flat faced	**E**
DN 150, PN 10/16, Type A, flat faced	**J**
DN 200, PN 10, Type A, flat faced	**K**
JIS10K 6B	**N**
JIS10K 8B	**P**
(Note: Flange bolting patterns and facings dimensionally correspond to the applicable ASME B16.5 or EN 1092-1, or JIS B 2220 standard.)	
Approvals	
ATEX II 2GD, FM Class I Div. 2, SAA Class I	**3**
CSA Class I Div. 1[3]	**4**

1) Not available with flanged versions
2) Available with flanged versions only
3) Available with mounting options 0 ... 2 only

Selection and Ordering data	Order code
Further designs Please add "**-Z**" to Order No. and specify Order code(s).	
Stainless steel tag [69 x 50 mm (2.71 x 1.97 inch)]: Measuring point number/ identification (max. 27 characters) specify in plain text	**Y15**
Operating instructions	Order No.
Quick Start guide, multi-language	**7ML1998-5QM82**
Applications Guidelines, multi-language Note: The Applications Guidelines should be ordered as a separate line item on the order.	**7ML1998-5HV61**
This device is shipped with the Siemens Milltronics manual CD containing the complete ATEX Quick Start and Operating Instructions library.	
Accessories	
Tag, stainless steel with hole, 12 x 45 mm (0.47 x 1.77 inch), one text line for fastening on sensors	**7ML1930-1BJ**
Submergence shield kit	**7ML1830-1BJ**
Universal box bracket, mounting kit	**7ML1830-1BK**
Channel bracket, wall mount	**7ML1830-1BL**
Extended channel bracket, wall mount	**7ML1830-1BM**
Channel bracket, floor mount	**7ML1830-1BN**
Extended channel bracket, floor mount	**7ML1830-1BP**
Bridge channel bracket, floor mount (see Mounting Brackets on page 4/204 for more information)	**7ML1830-1BQ**
1" NPT locknut, plastic	**7ML1830-1DS**
1" BSPT locknut, plastic	**7ML1830-1DR**
Easy Aimer 2, with ¾" x 1" NPT PVC coupling	**7ML1830-1AQ**
Easy Aimer 2, aluminum with M20 adapter and 1" and 1½" BSPT aluminum couplings	**7ML1830-1AX**
Easy Aimer 304 with stainless steel coupling	**7ML1830-1AU**
Easy Aimer 304, with M20 adapter and 1" and 1½" BSPT 304 SS couplings	**7ML1830-1GN**

© Siemens AG 2012

Selection and Ordering data	Order No.
EchoMax XPS-15F ultrasonic transducer High-frequency ultrasonic transducer designed for a wide variety of liquid and solid applications, for use with approved controllers. Includes integral temperature sensor. Measuring range: min. 0.3 m, max. 15 m	**7ML1171-** ■■■■■0
Mounting thread and facing	
1" NPT [(Taper), ANSI/ASME B1.20.1]	1
Cable length	
5 m (16.40 ft)	B
10 m (32.81 ft)	C
30 m (98.43 ft)	D
50 m (164.04 ft)	E
100 m (328.08 ft)	F
Mounting flange, flush mount	
None	A
6" ASME, 150 lb, flat faced	B
8" ASME, 150 lb, flat faced	C
(Note: Flange bolting patterns and facings dimensionally correspond to the applicable ASME B16.5, or EN 1092-1, or JIS B 2220 standard.)	
Approvals	
FM Class I Div. 1	1

Selection and Ordering data	Order code
Further designs Please add "**-Z**" to Order No. and specify Order code(s). Stainless steel tag [69 x 50 mm (2.71 x 1.97 inch)]: Measuring point number/ identification (max. 27 characters) specify in plain text	**Y15**
Operating Instructions	Order No.
Quick Start guide, multi-language	**7ML1998-1DU01**
Applications Guidelines, multi-language Note: The Applications Guidelines should be ordered as a separate line item on the order.	**7ML1998-5HV61**
This device is shipped with the Siemens Milltronics manual CD containing the complete ATEX Quick Start and Operating Instructions library.	
Accessories	
Tag, stainless steel with hole, 12 x 45 mm (0.47 x 1.77 inch), one text line for fastening on sensors	**7ML1930-1BJ**
Submergence shield kit	**7ML1830-1BJ**
Universal box bracket, mounting kit	**7ML1830-1BK**
Channel bracket, wall mount	**7ML1830-1BL**
Extended channel bracket, wall mount	**7ML1830-1BM**
Channel bracket, floor mount	**7ML1830-1BN**
Extended channel bracket, floor mount	**7ML1830-1BP**
Bridge channel bracket, floor mount (see Mounting Brackets on page 4/204 for more information)	**7ML1830-1BQ**
1" NPT locknut, plastic	**7ML1830-1DS**
Easy Aimer 2, with ¾" x 1" NPT PVC coupling	**7ML1830-1AQ**
Easy Aimer 304 with stainless steel coupling	**7ML1830-1AU**

Selection and Ordering data	Order No.
EchoMax XPS-30 ultrasonic transducer High-frequency ultrasonic transducer designed for a wide variety of liquid and solid applications, for use with approved controllers. Includes integral temperature sensor. 1½" universal thread compatible with 1½" NPT and R 1½" [(BSPT), EN 10226] Measuring range: min. 0.6 m (1.97 ft), max. 30 m (98.43 ft)	**7ML1123-** ■■■■0
Mounting thread and facing	
1½" universal thread	0
1½" universal thread, foam facing[1]	1
1½" universal thread, PTFE facing[2]	2
Cable length	
5 m (16.40 ft)	B
10 m (32.81 ft)	C
30 m (98.43 ft)	E
50 m (164.04 ft)	F
100 m (328.08 ft)	K
Mounting flange	
None	A
6" ASME, 150 lb, flat faced	D
8" ASME, 150 lb, flat faced	E
DN 150, PN 10/16, Type A, flat faced	J
DN 200, PN 10, Type A, flat faced	K
JIS10K 6B	N
JIS10K 8B	P
(Note: Flange bolting patterns and facings dimensionally correspond to the applicable ASME B16.5 or EN 1092-1, or JIS B 2220 standard.)	
Approvals	
ATEX II 2G 1D, FM Class I Div 2, SAA	5

[1] Not available with flanged versions
[2] Available with flanged versions only

© Siemens AG 2012

Selection and Ordering data	Order code
Further designs	
Please add "-Z" to Order No. and specify Order code(s).	
Acrylic coated, stainless steel tag [13 x 45 mm Stainless steel tag [69 x 50 mm (2.71 x 1.97 inch)]: Measuring-point number/identification (max. 27 characters) specify in plain text	**Y15**
Operating Instructions	Order No.
Quick Start guide, multi-language	**7ML1998-5QM82**
Applications Guidelines, multi-language Note: The Applications Guidelines should be ordered as a separate line item on the order.	**7ML1998-5HV61**
This device is shipped with the Siemens Milltronics manual CD containing the complete ATEX Quick Start and Operating Instructions library.	
Accessories	
Tag, stainless steel with hole, 12 x 45 mm (0.47 x 1.77 inch), one text line for fastening on sensors	**7ML1930-1BJ**
1½" BSPT locknut, plastic	**7ML1830-1DP**
Easy Aimer 2, 1½" NPT galvanized coupling	**7ML1830-1AN**
Easy Aimer 304, NPT with 1½" coupling	**7ML1830-1AT**
Easy Aimer 2, aluminum with M20 adapter and 1" and 1½" BSPT aluminum couplings	**7ML1830-1AX**
Easy Aimer 304, with M20 adapter and 1" and 1½" BSPT 304 SS couplings	**7ML1830-1GN**

Selection and Ordering data	Order No.
EchoMax XPS-40 ultrasonic transducer High-frequency ultrasonic transducer designed for a wide variety of liquid and solid applications, for use with approved controllers. Includes integral temperature sensor. 1½" universal thread compatible with 1½" NPT and R 1½" [(BSPT), EN 10226] Measuring range: min. 0.9 m (2.95 ft), max. 40 m (131.23 ft)	**7ML1127-** ■■■■**0**
Mounting thread and facing	
1½" universal thread	**0**
1½" universal thread, foam facing	**1**
Cable length	
5 m (16.40 ft)	**B**
10 m (32.81 ft)	**C**
30 m (98.43 ft)	**E**
50 m (164.04 ft)	**F**
100 m (328.08 ft)	**K**
Mounting flange	
None	**A**
Approvals	
ATEX II 2G 1D, FM Class I Div 2, SAA	**5**

Selection and Ordering data	Order code
Further designs	
Please add "-Z" to Order No. and specify Order code(s).	
Stainless steel tag [69 x 50 mm (2.71 x 1.97 inch)]: Measuring point number/ identification (max. 27 characters) specify in plain text	**Y15**
Operating Instructions	Order No.
Quick Start guide, multi-language	**7ML1998-5QM82**
Applications Guidelines, multi-language Note: The Applications Guidelines should be ordered as a separate line item on the order.	**7ML1998-5HV61**
This device is shipped with the Siemens Milltronics manual CD containing the complete ATEX Quick Start and Operating Instructions library.	
Accessories	
Tag, stainless steel with hole, 12 x 45 mm (0.47 x 1.77 inch), one text line for fastening on sensors	**7ML1930-1BJ**
1½" BSPT locknut, plastic	**7ML1830-1DP**
Easy Aimer 2, 1½" NPT galvanized coupling	**7ML1830-1AN**
Easy Aimer 304, NPT with 1½" coupling	**7ML1830-1AT**
Easy Aimer 2, aluminum with M20 adapter and 1" and 1½" BSPT aluminum couplings	**7ML1830-1AX**
Easy Aimer 304, with M20 adapter and 1" and 1½" BSPT 304 SS couplings	**7ML1830-1GN**

© Siemens AG 2012

Selection and Ordering data	Order No.
EchoMax XCT-8 ultrasonic transducer High-frequency ultrasonic transducer designed for a wide variety of liquid and solid applications, for use with approved controllers. Includes integral temperature sensor. Ambient temperatures up to 145 °C (293 °F) Measuring range: min. 0.6 m (2 ft), max. 8 m (26 ft)	**7ML1132-** ■■■■0
Mounting thread and facing	
1" NPT [(Taper), ANSI/ASME B1.20.1]	0
1" NPT [(Taper), ANSI/ASME B1.20.1], PTFE facing[1]	1
R 1" [(BSPT), EN 10226]	2
R 1" [(BSPT), EN 10226], PTFE facing[1]	3
Cable length	
1 m (3.28 ft)	A
5 m (16.40 ft)	B
10 m (32.81 ft)	C
30 m (98.43 ft)	E
50 m (164.04 ft)	F
100 m (328.08 ft)	K
Mounting flange	
None	A
3" ASME, 150 lb, flat faced	C
4" ASME, 150 lb, flat faced	D
6" ASME, 150 lb, flat faced	E
DN 80, PN 10/16, Type A, flat faced	G
DN 100, PN 10/16, Type A, flat faced	J
DN 150, PN 10/16, Type A, flat faced	L
JIS10K 3B	M
JIS10K 4B	P
JIS10K 6B (Note: Flange bolting patterns and facings dimensionally correspond to the applicable ASME B16.5 or EN 1092-1 or JIS B 2220 standard.)	R
3" universal[2) 3)]	S
4" universal[4) 3)]	T
6" universal[5) 3)]	U
4" sanitary flange[6)]	V
Approvals	
ATEX II 2GD, FM Class I, Div. 2, SAA	4
CSA Class I Div. 1[7)]	5
CE, C-TICK, $CSA_{US/C}$[8)]	7

1) Available with flange versions S, T, U and, V only
2) Universal fits 3" ASME, DN 80, JIS 10K3B style
3) Available for mounting thread and facing options 1 and 3 only
4) Universal fits 4" ASME, DN 100, JIS 10K4B style
5) Universal fits 6" ASME, DN 150, JIS 10K6B style
6) Available with Mounting thread and facing options 1 and 3, and approval option 7 only
7) Available with mounting thread and facing option 0 only
8) Available with 4" mounting flange option V only

Selection and Ordering data	Order code
Further designs Please add "-Z" to Order No. and specify Order code(s).	
Stainless steel tag [69 x 50 mm (2.71 x 1.97 inch)]: Measuring point number/ identification (max. 27 characters) specify in plain text	**Y15**
Operating Instructions	Order No.
Quick start manual, multi-language	**7ML1998-5QM82**
XCT-8 with Sanitary Flange, multi-language Note: This manual should be ordered as a separate line item with Mounting Option V.	**7ML1998-5HX62**
Applications Guidelines, multi-language Note: The Applications Guidelines should be ordered as a separate line item on the order.	**7ML1998-5HV61**
This device is shipped with the Siemens Milltronics manual CD containing the complete ATEX Quick Start and Operating Instructions library.	
Accessories	
Tag, stainless steel with hole, 12 x 45 mm (0.47 x 1.77 inch), one text line for fastening on sensors	**7ML1930-1BJ**
Submersible hood	**7ML1830-1BH**
Universal box bracket, mounting kit	**7ML1830-1BK**
Channel bracket, wall mount	**7ML1830-1BL**
Extended channel bracket, wall mount	**7ML1830-1BM**
Channel bracket, floor mount	**7ML1830-1BN**
Extended channel bracket, floor mount	**7ML1830-1BP**
Bridge channel bracket, floor mount (see Mounting Brackets on page 4/204 for more information)	**7ML1830-1BQ**
1" NPT locknut, plastic	**7ML1830-1DS**
1" BSPT locknut, plastic	**7ML1830-1DR**
Easy Aimer 304 with stainless steel coupling	**7ML1830-1AU**
Easy Aimer, aluminum, with M20 adapter and ¾ ... 1" and 1½" BSPT couplings	**7ML1830-1AX**
Easy Aimer 304, with M20 adapter and 1" and 1½" BSPT 304 SS couplings	**7ML1830-1GN**
Sanitary, 4" mounting clamp	**7ML1830-1BR**
Sanitary, isolating gasket	**7ML1830-1KC**

© Siemens AG 2012

Dimensional drawings

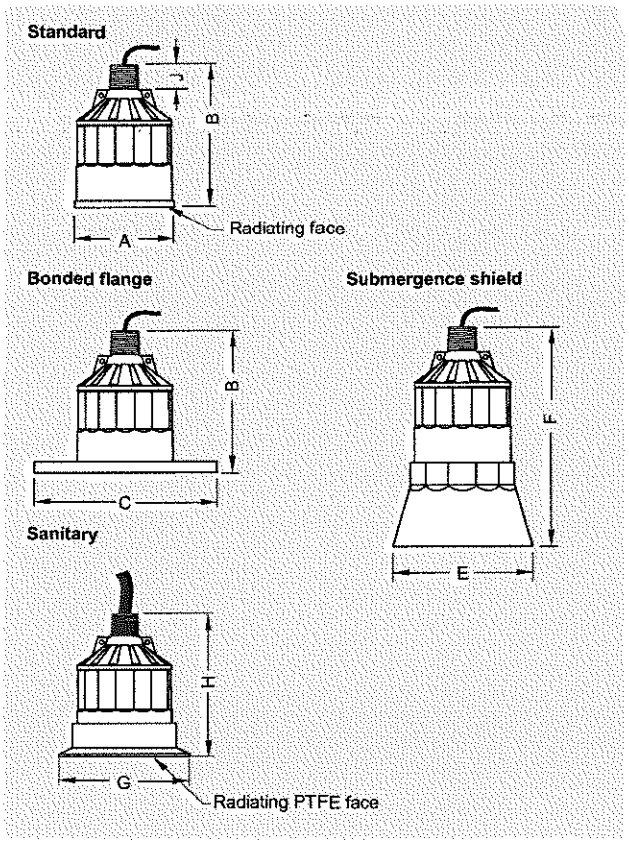

XPS and XCT ultrasonic transducer, dimensions in mm (inch)

Version Dimension	XPS-10	XPS-15	XPS-30	XPS-40
A	88 mm (3.464 inch)	121 mm (4.764 inch)	175 mm (6.890 inch)	206 mm (8.110 inch)
B	122 mm (4.803 inch)	132 mm (5.197 inch)	198 mm (7.795 inch)	229 mm (9.016 inch)
C	According to ASME, DIN and JIS			n/a
E	124 mm (4.882 inch)	158 mm (6.220 inch)	n/a	n/a
F	152 mm (5.984 inch)	198 mm (7.795 inch)	n/a	n/a
J	28 mm (1.1 inch)	28 mm (1.1 inch)	28 mm (1.1 inch)	28 mm (1.1 inch)

Version Dimension	XCT-8	XCT-12
A	88 mm (3.464 inch)	121 mm (4.764 inch)
B	122 mm (4.803 inch)	132 mm (5.197 inch)
C	According to ASME, DIN and JIS	
E	n/a	n/a
F	n/a	n/a
G	Sanitary version: 119 mm (4.68 inch)	n/a
H	Sanitary version: 122 mm (4.8 inch)	n/a
J	28 mm (1.1 inch)	28 mm (1.1 inch)

Schematics

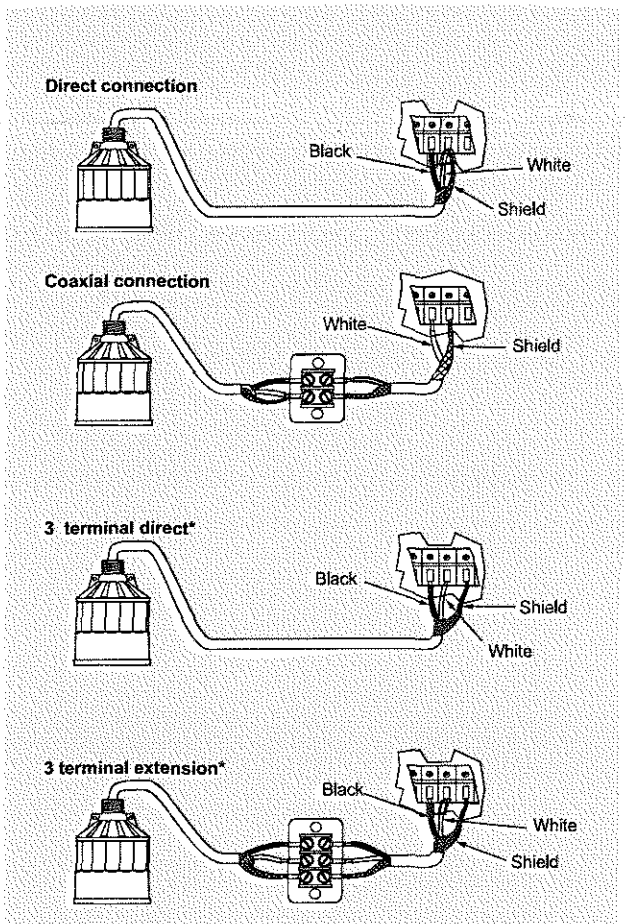

* For SITRANS LUT400, SITRANS LUC500, MultiRanger 100/200, HydroRanger 200

Mounting
Make particularly sure that the radiating face of the transducer is protected from damage.Mount the transducer so that it is above the maximum material level by at least the blanking value. On liquid applications, the transducer must be mounted so that the axis of transmission is perpendicular to the liquid surface. On solids alications, a Milltronics Easy Aimer should be used to facilitate aiming the transducer. Consider the optional temperature sensor when mounting the transducer.

Interconnection
Do not route cable openly or near high voltage or current runs, contactors and SCR control drives. For optimum isolation against electrical noise, run cable separately in a grounded metal conduit. Seal all thread connections to prevent ingress of moisture.

XPS and XCT ultrasonic transducer connections

© Siemens AG 2012

Selection and Ordering data	Order No.
EchoMax XCT-12 ultrasonic transducer High-frequency ultrasonic transducer designed for a wide variety of liquid and solid applications, for use with approved controllers. Includes integral temperature sensor. Ambient temperatures up to 145 °C (293 °F) Measuring range: min. 0.6 m (2 ft), max. 12 m (40 ft)	**7ML1136-** ■■■■0
Mounting thread and facing	
1" NPT [(Taper), ANSI/ASME B1.20.1]	0
1" NPT [(Taper), ANSI/ASME B1.20.1], PTFE facing, available for flange options U only[1]	1
R 1" [(BSPT), EN 10226]	2
R 1" [(BSPT), EN 10226], PTFE facing, available for flange options U only[1]	3
Cable length	
1 m (3.28 ft)	A
5 m (16.40 ft)	B
10 m (32.81 ft)	C
30 m (98.43 ft)	E
50 m (164.04 ft)	F
100 m (328.08 ft)	K
Mounting flange	
None	A
6" ASME, 150 lb, flat faced	D
8" ASME, 150 lb, flat faced	E
DN 150, PN 10/16, Type A, flat faced	J
DN 200, PN 10, Type A, flat faced	K
JIS10K 6B	N
JIS10K 8B (Note: Flange bolting patterns and facings dimensionally correspond to the applicable ASME B16.5 or EN 1092-1 or JIS B 2220 standard.)	P
6" universal for 6" ASME, DN 150 or JIS 10K6B style[2]	U
Approvals	
ATEX II 2GD, FM Class I, Div. 2, SAA	3
CSA Class I, Div. 1, available with mounting thread and facing option 0 only	4

[1] Available with universal flanges only
[2] For use with mounting thread and facing option 1 and 3 only

Selection and Ordering data	Order code
Further designs Please add "**-Z**" to Order No. and specify Order code(s).	
Stainless steel tag [69 x 50 mm (2.71 x 1.97 inch)]: Measuring point number/ identification (max. 27 characters), specify in plain text	**Y15**
Operating instructions	Order No.
Quick start manual, multi-language	**7ML1998-5QM82**
Applications Guidelines, multi-language Note: The Applications Guidelines should be ordered as a separate line item on the order.	**7ML1998-5HV61**
This device is shipped with the Siemens Milltronics manual CD containing the complete ATEX Quick Start and Operating Instructions library.	
Accessories	
Tag, stainless steel with hole, 12 x 45 mm (0.47 x.77 inch), one text line for fastening on sensors	**7ML1930-1BJ**
Submergence shield kit	**7ML1830-1BJ**
Universal box bracket, mounting kit	**7ML1830-1BK**
Channel bracket, wall mount	**7ML1830-1BL**
Extended channel bracket, wall mount	**7ML1830-1BM**
Channel bracket, floor mount	**7ML1830-1BN**
Extended channel bracket, floor mount	**7ML1830-1BP**
Bridge channel bracket, floor mount (see Mounting Brackets on page 4/204 for more information)	**7ML1830-1BQ**
1" NPT locknut, plastic	**7ML1830-1DS**
1" BSPT locknut, plastic	**7ML1830-1DR**
Easy Aimer 304 with stainless steel coupling	**7ML1830-1AU**
Easy Aimer 2, aluminum with M20 adapter and 1" and 1½" BSPT aluminum couplings	**7ML1830-1AX**
Easy Aimer 304, with M20 adapter and 1" and 1½" BSPT 304 SS couplings	**7ML1830-1GN**

Chapter 2.4

Technical Literature - Level Gauge

Magnetic Level Indicators / Gauges
Model BNA

Applications

- Chemical industry, petrochemistry, offshore
- Shipbuilding, engineering
- Power stations
- Pharmacie, food an beverage industry, water purification,
- environmental industry

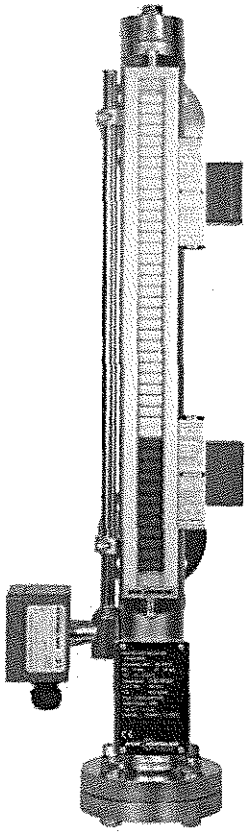

Special features

- Designs for temperatures from 160 °C to +450 °C
- Designs for a pressure range from full vacuum to 420 bar
- Special designs: Food industry design, interface measurement, coatings (e.g. enameled), liquid gas, heating jacket

Description

A communicating bypass chamber is flanged to the side of a vessel, and as the liquid level in the tank rises or falls, a float with a built-in magnetic system inside the chamber rises or falls with it.

The chamber is completely sealed so that the only moving part of the apparatus in contact with the liquid is the float itself. On the dry side' of the chamber is the KSR Magnetic Roller Display, a column of magnetic rollers which are white on one side and red on the other. The rollers are made from plastic (MRA) or ceramics (MRK) with a distance of 10 mm between their axes.

As the float moves up or down the bunched field of the permanent magnet mounted in its top section ‚pulls' the rollers through a rotation of 180°. As the float rises the rollers are turned from white to red, and as the float falls, they are changed back to white again.

This means that at any given time the amount of liquid in the tank is constantly represented by a red column without any external power supply.

KSR KUEBLER
A division of the WIKA Group

Technical Advantages

- Simple, robust, and solid design
- Pressure- and gas-proof separation of chamber and display
- Measuring and indicating of the level of aggressive, combustible, toxic, hot, agitated and contaminated liquids
- KSR Magnetic Roller Displays without external power supply
- Available for applications in all areas of industry through use of highly corrosion-resistant materials

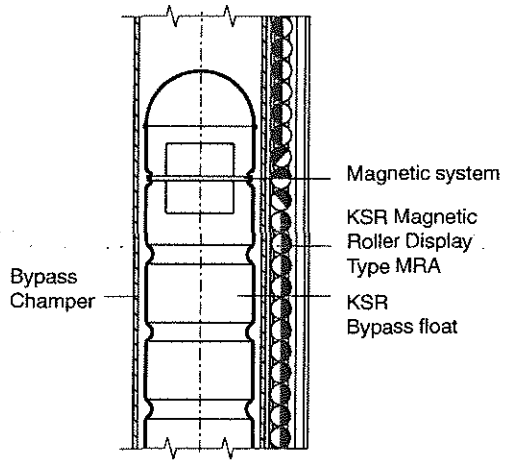

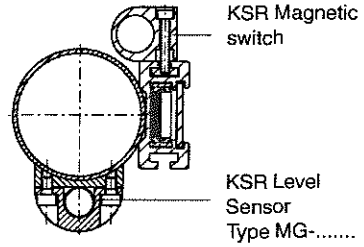

Approvals

CE

KEMA REGISTERED QUALITY — 94/9/EG

TÜV Süd - DGRL 97/23/EG

GL — Germanischer Lloyd

Det Norske Veritas

GS — Rostechnadzor

ABS — American Bureau of Shipping

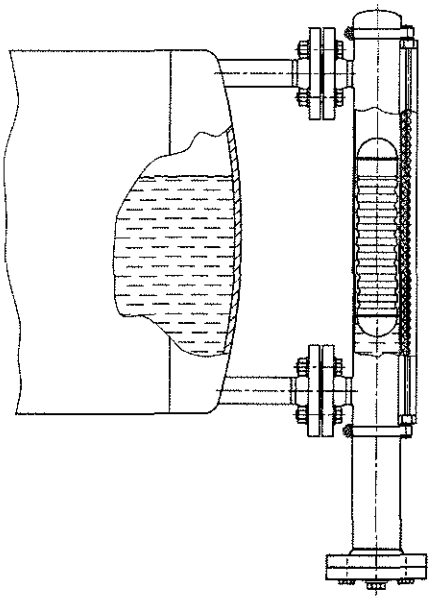

Type Code

Code								
1		Basic type						
	BNA	Magnetic Level Indicator						
2		Process connections						
		1st Key = Nom. size		2nd Key = Nom. pressure		3rd Key = Flange face		
.../.../...	EN...	EN 1092 DN 10 - DN 100	...	PN6 - PN400	...	Form B1, B2, C, D		
	...	DIN DN 10 - DN 100		PN6 - PN400		Form, C, N, F		
	...	ANSI 1/2" - 4"		Class 150 - Class 400		Form RF, SF, FF, RTJ		
	JIS...	JIS DN 10 - DN 100		5 K - 63 K		Form RF, SF, FF, RTJ		
	GN...	Thread male DIN						
	GM...	Thread female DIN						
	NPTN...	Thread male NPT						
	NPTM...	Thrread female NPT						
	S...	Welding stubs						
3		Option Level Sensor (see separate type code page 25)						
...	MG	Basic type without optional code						
4		Distance centre-to-centre						
...	M...	Distance between fl ange centres in mm						
5		Material and chamber dimensions						
		1st Key = Material					2nd Key = Chamber dimensions	
.../..x..	V	Stainless steel 1.4571	HC	Hastelloy C			..x..	Chamber OD x Wall thickness in mm
	L	Stainless steel 1.4404	MO	SS 1.4529 (6Mo)				
	VE	Stainless steel electro-polished	M	Monel				
	VTF	Stainless steel PTFE-lined	PP	Polypropylene				
	VET	Stainless steel E-TFE-coated	PF	PVDF				
	VEC	Stainless steel E-CTFE-coated	G	Borosilicate glass				
6		Magnetic Roller Display						
		1st Key = Design				2nd Key = Scale		
.../...	MRA	Aluminium housing with plastic rollers			SK.	with scale (plastic), graduation in cm (printed)		
	MRK	Aluminium housing with ceramic rollers			SA.	Aluminium scale graved		
	MNAV	Stainless steel housing with plastic rollers			SV.	Stainless steel graved		
	MNKV	Stainless steel with ceramic rollers			P.	with sight glass extender (for insulations))		
						(weitere Typschlüssel auf Seite 19)		
7		Option Magnetic Switches 1st Key = Quantity, 3rd Key = Cable length						
		2nd Key = Execution				3rd Key = Cable length		4th Key = Options
.../.../.../...	M.	BGU	MVE.	BGU-V-E	1	1 m	R22	Pre resistance R22 for SPS
	ME.	BGU-E	MVD.	BGU-V-Exd	2	2 m	N	NAMUR circuit
	MS12	BGU-M12	MHT	BGU-AHT	3	3 m		according DIN EN 60947-5-6
	MES12	BGU-E-M12	MVHT	BGU-VHT	...	...		
	MA	BGU-A	MIL/H	BGU-AIL/H				
	MEA	BGU-A-E	MAR	BGU-AR				
	MD.	BGU-Exd	MAD	BGU-AD				
	MV.	BGU-V	MAM	BGU-AM				
8		Float (cylindrical) 2nd Key = Diameter/Length in mm						
		1st KEy = Material				3rd Key = Pressure class		4th Key = Magnetic system
Z..S..	.V...	Stainless steel 1.4571	.G...	Borosilicate glass	PN16	PN16	R48H	R48H
	.T...	Titanium 3.7035	.VEC...	Stainless steel 1.4571 E-CTFE-coated	PN25	PN25	K92	K92
	.HC...	Hastelloy C			...	...	K74	K74
	.CF...	CF340	.TEC...	Titanium 3.7035 E-CTFE-coated			A90	A90
	.PP...	Polypropylene					A110	A110
	.PF...	PVDF					A125	A125
9		Approvals						
...	Ex	Ex-Design						

Ordering examples

	Basic type		Connection size		Option level sensor		Distance centre-tocentre		Material Chamber dimensions		Magnetic Roller display		Option Magnetic switch		Float design		Certificates
Code	1	-	2	-	3	-	4	-	5	-	6	-	7	-	8	-	9
	BNA	-	EN25/16/B1	-	MG	-	M1500	-	V60x2	-	MRA / SK	-	3 / M / 2	-	ZVSS185...	-	

Mini-Bypass Magnetic Level Indicators / Gauges of stainless steel PN40

Design: BNA - ../.. - M.... - V42x2 - MRA
Pressure Equipment Directive 97/23/EG

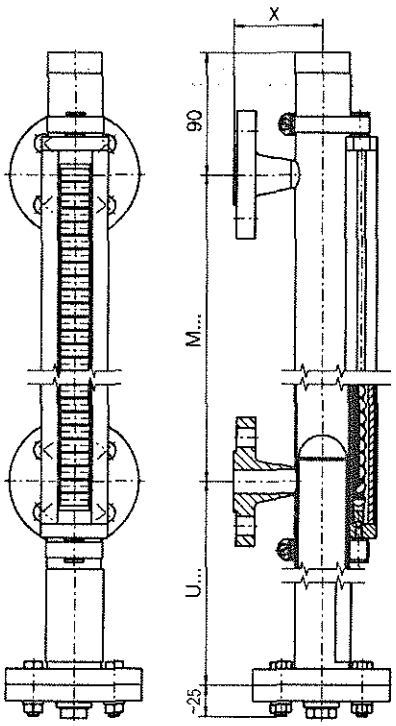

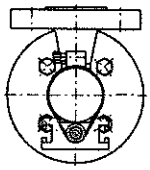

M = Centre-to-centre process connection
U = Length of float (min. 200 mm)
X = Dep. on process connection

Mini Magnetic Level Indicators / Gauges	
Chamber	ø 42,4 x 2 mm
Chamber end top	Rohrboden Options: (see page 33) - Vent plug - Vent valve - Vent fl ange
Chamber end bottom	Flanged with drain plug Options: (siehe Seite 33) - Drain valve - Drain flange
Process connection	Flange EN 1092-1, DN10 - DN50, PN6 - PN40 Flange ANSI B 16.5, 1/2" - 2" Class 150 - Class 300 Thread stubs G/NPT 1/2" - 1" Welding stubs1/2" - 1" (Options see page 34)
Distance centre-to-centre M...	Min. 150 mm to max. 5000 mm
Material	Stainless steel 1.4571
Nominal pressure	Max. 40 bar (entsprechend Schwimmerausführung)
Temperaturbereich	Max. 150 °C (according to fl oat design)
Float	Type ZVS 32, ZTS 32 Material stainless steel 1.4571, Titanium 3.7035 S.G. min. 490 kg/m³ Type ZBS35/120 Type key see page 16,18 Material Buna S.G. min. 800 kg/m³ Pressure max. 6 bar Temperature max. 80 °C
Magnetic roller display	Type MRA... for technical data and further designs and options see page 20-21
Further options:	
Magnetic switches	see page 22-27
Level sensors	see page 28-32

Bypass Magnetic Level Indicators / Gauges PN6 - PN40

Design: BNA - ../.. - M.... - ..x.. - MRA (-Ex)
Pressure Equipment Directive 97/23/EG

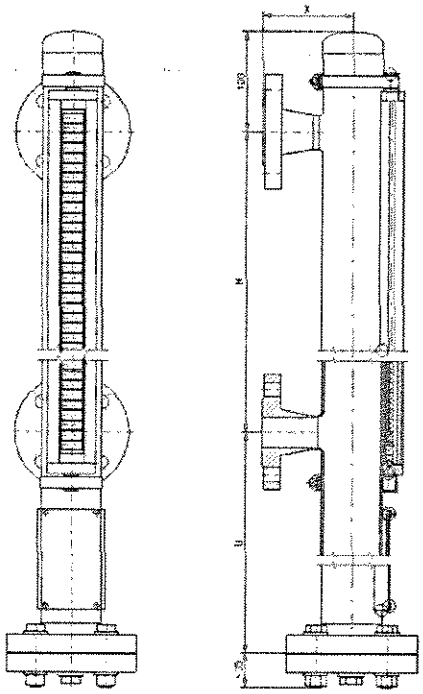

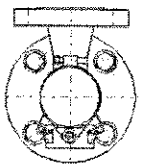

M = Centre-to-centre process connection
U = Length of fl oat (min. 200 respectively 220 mm)
X = Dep. on process connection

PN6 - PN40	
Chamber	ø 60,3 x 2 mm
Chamber end top	Welding cap or fl at top or fl anged Options: (see page 33) - Vent plug - Vent valve - Vent fl ange
Chamber end bottom	Flanged with drain plug Options: (see page 33) - Drain valve - Drain fl ange
Process connection	Flange EN 1092-1, DN10 - DN100, PN6 - PN40 Flange ANSI B 16.5, 1/2" - 4" Class 150 - Class 300 Thread stubs G/NPT 1/2" - 1" Welding stubs 1/2" - 1" (Options see page 34)
Distance centre-to-centre M...	min. 150 mm to max. 6000 mm (other dimensions on request)
Material	Stainless steel (316 Ti, 316 L, 904 L) Titanium Grade 2 Hastelloy C
Nominal pressure	Max. 40 bar (according to flange design)
Temperature range	-160 °C to +450 °C (according to design)
Float	Titan Grade 2 Stainless steel 316Ti Float design according to process parameters S.G., pressure and temperature (see type code page 16-18)
Magnetic roller display	Typ MRA-M... < 200 °C Typ MRK-M... > 200 °C for technical data and further designs and options see page 20-21
Further options:	
Magnetic switches	see page 22-27
Level sensors	see page 28-32
Electrical trace heating	on request
Chamber insulation	on request
Explosion protection (Option)	Ex II 1/2G c T1-T6 KEMA 02 ATEX 2106 X

Other designs on request

Bypass Magnetic Level Indicators / Gauges PN63 and PN100 of stainless steel

Design: BNA - ../.. - M.... - V..x.. - MRA (-Ex)
Pressure Equipment Directive 97/23/EG

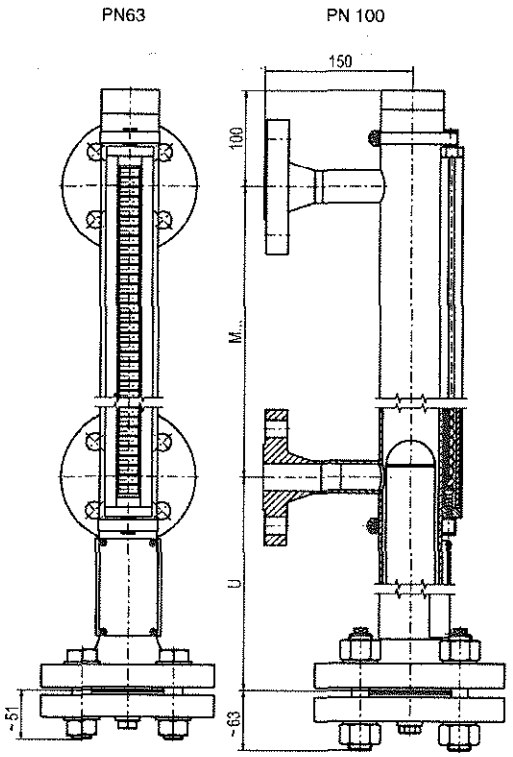

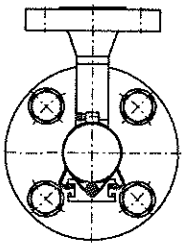

M = Centre-to-centre process connection
U = Length of float (min. 220 mm)

PN63 and PN100		
Chamber	PN63 PN100	ø 60,3 x 2 mm oder ø 60,3 x 2,6 mm ø 65 x 3,5 mm
Chamber end top	PN63 PN100	Welding cap or fl at top or flanged DN50 PN63 bzw. ANSI 2" Class 600 DN50 PN100 bzw. ANSI 2" Class 600 Options: (siehe Seite 30) - Entlüftungsschraube - Entlüftungsventil - Entlüftungsflansch
Unterer Standrohrab-schluss	PN63 PN100	Flanschverbindung DN50 PN63 bzw. ANSI 2" Class 600 DN50 PN100 bzw. ANSI 2" Class 600 mit Ablassschraube Optionen: (siehe Seite 30) - Vent valve - Vent flange
Process connection		Flange EN 1092-1, DN10 - DN100, PN63 - PN100 Flange ANSI B 16.5, 1/2" - 4" Class 600 Thread stubs G/NPT 1/2" - 1" Welding stubs 1/2" - 1" (Options see page 31)
Distance centre-to-centre M...		Min. 150 mm to max. 6000 mm (other dimensions on request)
Material		Stainless steel 1.4571
Nominal pressure	PN63 PN100	Max. 63 bar Max. 100 bar
Temperature range		-30 °C to +300 °C (according to design)
Float		Titan Grade 2 Float design according to process parameters S.G., pressure and temperature (see type code page 19 and 20)
Magnetic roller display		Type MRA... < 200 °C Type MRK... > 200 °C for technical data and further designs and options see page 20-21
Further options:		
Magnetic switches		See page 22-27
Level sensors		See page 28-32
Electrical trace heating		on request
Chamber insulation		on request
Explosion protection (Option)		Ex II 1/2G c T1-T6 KEMA 02 ATEX 2106 X

Other designs on request

Bypass Magnetic Level Indicators / Gauges PN160 and PN250 of stainless steel

Design: BNA - ../.. - M.... - V..x.. - MRA (-Ex)
Pressure Equipment Directive 97/23/EG

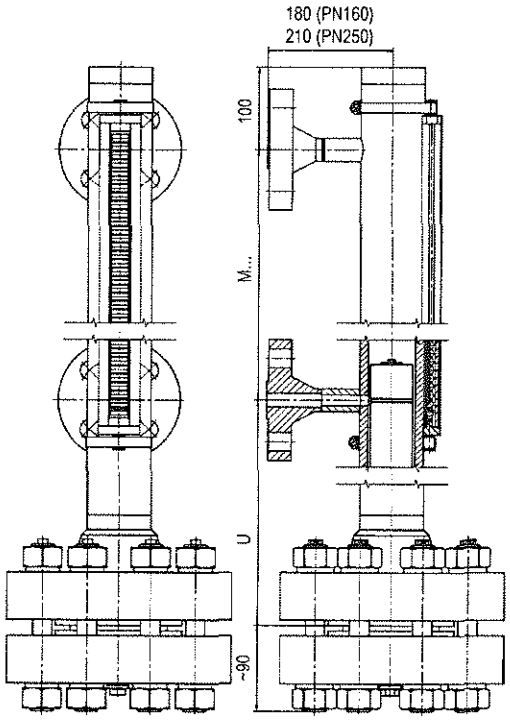

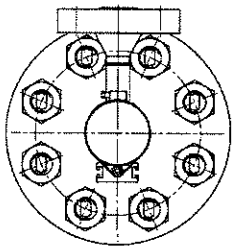

M = Centre-to-centre process connection
U = Length of float (min. 220 mm)

PN160 and PN250	
Chamber PN160 PN250	ø 73,03 x 5,16 mm ø 71 x 7,5 mm
Chamber end top	Flat top or fl anged ANSI 2 1/2" Class 1500 Options: (see page 30) - Vent plug - Vent valve - Vent fl ange
Chamber end bottom	Flanged ANSI 2 1/2" Class 1500 with drain plug Options: (see page 30) - Drain valve - Drain flange
Process connection	Flange EN 1092-1, DN10 - DN50, PN160 - PN250 Flange ANSI B 16.5, 1/2" - 2" Class 1500 Thread stubs G/NPT 1/2" - 1" Welding stubs 1/2" - 1" (Options see page 31)
Distance centre-to-centre M...	Min. 150 mm to max. 6000 mm (other dimensions on request)
Material	Stainless steel 1.4571
Nominal pressure PN160 PN250	Max. 160 bar Max. 250 bar
Temperature range PN160 PN250	 -30 °C bis +285 °C -30 °C bis +200 °C (according to design)
Float	Titan Grade 2 Float design according to process parameters S.G., pressure and temperature (see type code page 18) CF 340 solid body material, leakage-proof
Magnetic roller display	Typ MRA... < 200 °C Typ MRK... > 200 °C Technische Daten und weitere for technical data and further designs and options see page 20-21
Further options: Magnetic switches Level sensors Electrical trace heating Chamber insulation	 See page 22-27 See page 28-32 on request on request
Explosion protection (Option)	Ex II 1/2G c T1-T6 KEMA 02 ATEX 2106 X

Other designs on request

Bypass Magnetic Level Indicators / Gauges PN400 of stainless steel

Design: BNA - ../.. - M.... - V76x10 - MRA (-Ex)
Pressure Equipment Directive 97/23/EG

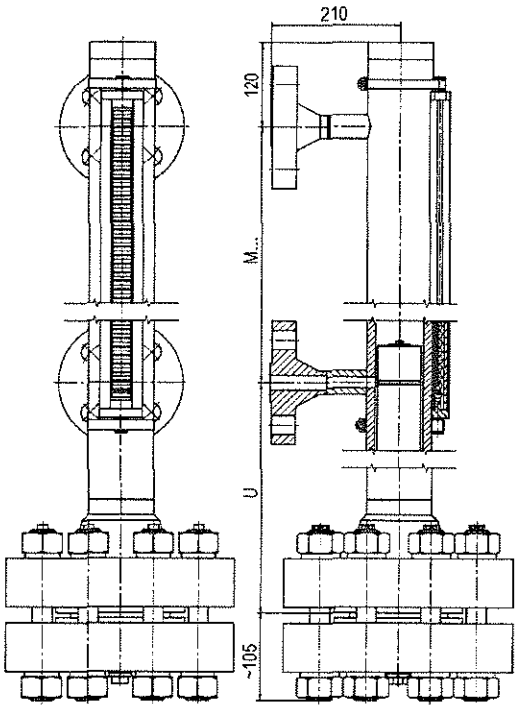

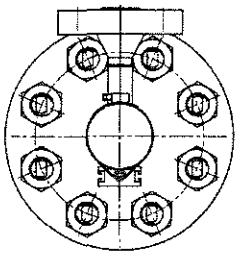

M = Centre-to-centre process connection
U = Length of fl oat

PN400	
Chamber	ø 76 (ø 76,1) x 10 mm
Chamber end top	Flat top or fl anged ANSI 2 1/2" Class 2500 Options: (see page 30) - Vent plug - Vent valve - Vent fl ange
Chamber end bottom	Flanged ANSI 2 1/2" Class 2500 mit Ablassschraube Optionen: (siehe Seite 30) - Drain valve - Drain flange
Process connection	Flange EN 1092-1, DN10 - DN50, PN400 Flange ANSI B 16.5, 1/2" - 2" Class 2500 Thread stubs G/NPT 1/2" - 1" Welding stubs 1/2" - 1" (Options see page 31)
Distance centre-to-centre M...	Min. 150 mm to max. 6000 mm (other dimensions on request)
Material	Stainless steel 1.4571
Nominal pressure	Max. 400 bar
Temperature range	-30 °C to +70 °C (according to design)
Float	Titan Grade 2 Float design according to process parameters S.G., pressure and temperature on request.
Magnetic roller display	Typ MRA... Technische Daten und weitere for technical data and further designs and options see page 20-21
Further options:	
Magnetic switches	See page 22-27
Level sensors	See page 28-32
Electrical trace heating	on request
Chamber insulation	on request
Explosion protection (Option)	Ex II 1/2G c T1-T6 KEMA 02 ATEX 2106 X

Other designs on request

Bypass Magnetic Level Indicators / Gauges with heating jacket of stainless steel

Design: BNA - ../.. - M.... - V60/70 - MRA (-Ex)

Pressure Equipment Directive 97/23/EG

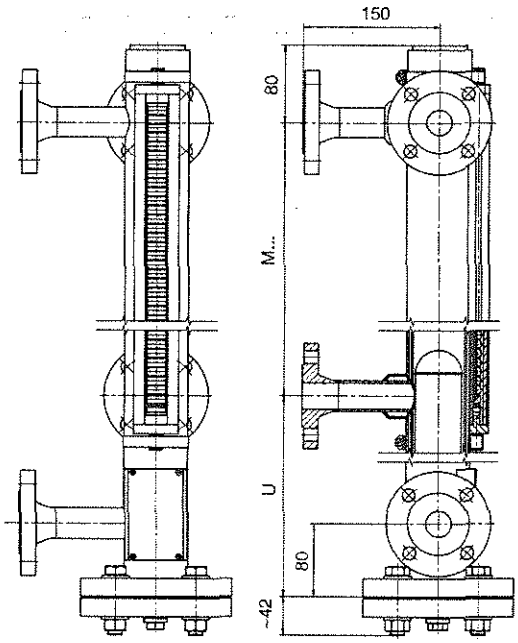

Process connection

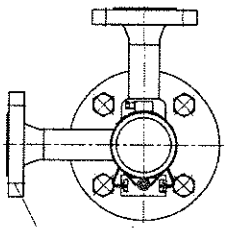

Heating jacket connection

M = Centre-to-centre process connection

U = Length of float (min. 220 mm)

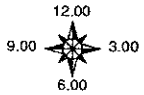

Magnetic Level Indicators / Gauges with heating jacket	
Chamber	ø 60,3 x 2 mm
Heating jacket pipe	ø 70 x 2 mm
Chamber end top	Welding cap Options: - Vent plug - Vent valve - Vent fl ange
Chamber end bottom	Flanged with drain Options: - Drain valve - Drain fl ange
Process connection	Flange EN 1092-1, DN10 - DN100, PN6 - PN40 Flange ANSI B 16.5, 1/2" - 4" Class 300 Thread stubs G/NPT 1/2" - 1" Welding stubs 1/2" - 1"
Heating jacket connection	(Options see page 31) Flange EN 1092-1, DN10 - DN10, PN40 Flange ANSI B 16.5, 1/2" - 4" Class 300 Thread stubs G/NPT 1/2" - 1" Welding stubs 1/2" - 1"
Distance centre-to-centre M...	Min. 150 mm to max. 6000 mm (other dimensions on request)
Material	Stainless steel 1.4571
Nominal pressure Process Heating jacket	 Max. 16 bar to max. 40 bar (according to fl ange design) Max. 16 bar
Temperature range	-60 °C to +450 °C (according to design)
Float	Titan Grade 2 Float design according to process parameters S.G., pressure and temperature (see type code page 15-16)
Magnetic roller display	Typ MRA... < 200 °C Typ MRK... > 200 °C for technical data and further designs and options see page 20-21
Further options: Magnetic switches Level sensors	 See page 22-27 See page 28-32
Explosion protection (Option)	Ex II 1/2G c T1-T6 KEMA 02 ATEX 2106 X

Other designs on request

Bypass Magnetic Level Indicators / Gauges in Liquid Gas Design of stainless steel

Design: BNA - ../.. - M.... - V88x2 - MRA (-Ex)
Pressure Equipment Directive 97/23/EG

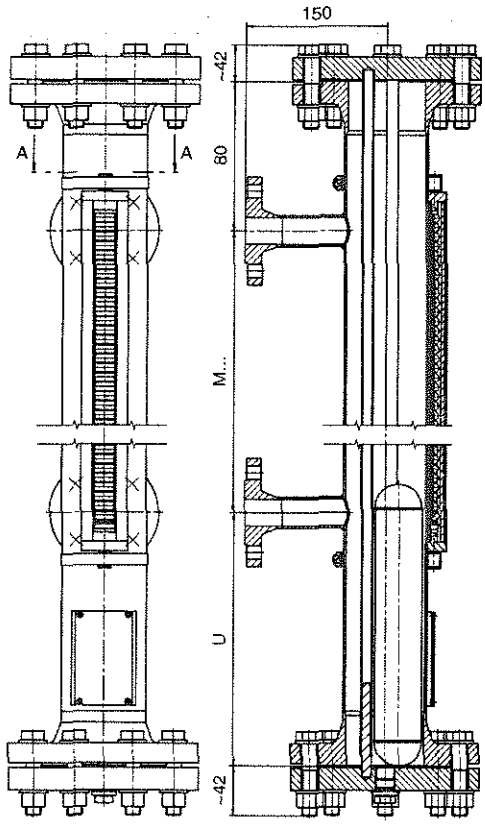

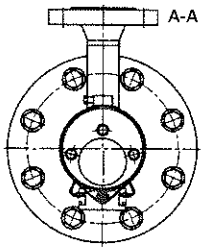

M = Centre-to-centre process connection
U = Length of float (min. 220 mm)

Liquid Gas Design	
Chamber	ø 88,9 x 2 mm
Chamber end top	Flanged Options: (see page 30) - Vent plug - Vent valve - Vent fl ange
Chamber end bottom	Flanged with drain plug Options: (page 30) - Drain valve - Drain flange
Process connection	Flange ANSI B 16.5, 1/2" - 4" Class 150 - Class 300 Thread stubs G/NPT 1/2" - 1" Flange EN 1092-1, DN10 - DN100, PN6 - PN40 Welding stubs 1/2" - 1" (Options see page 31)
Distance centre-to-centre M...	Min. 150 mm to max. 6000 mm
Material	Stainless steel 1.4571
Nominal pressure	Max. 25 bar (according to fl ange design)
Temperature range	-60 °C to +300 °C (according to design)
Float	Titan Grade 2 Float design according to process parameters S.G., pressure and temperature (see type code page 15)
Magnetic roller display	Typ MRA... < 200 °C Typ MRK... > 200 °C for technical data and further designs and options see page 20-21
Further options:	
Magnetic switches	See page 22-27
Level sensors	See page 28-32
Electrical trace heating	on request
Chamber insulation	on request
Explosion protection (Option)	Ex II 1/2G c T1-T6 KEMA 02 ATEX 2106 X

Other designs on request

Bypass Magnetic Level Indicators / Gauges E-CT-FE-coated

Design: BNA - ../16 - M....-VEC64x2 - MRA
Pressure Equipment Directive 97/23/EG

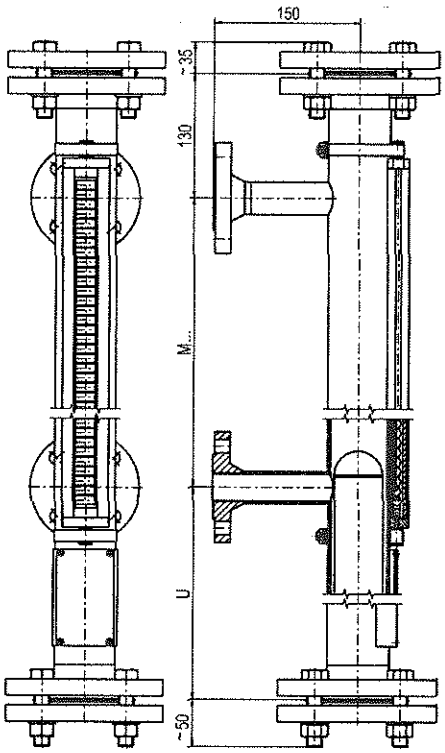

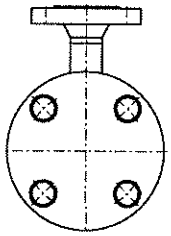

M = Centre-to-centre process connection
U = Length of float (min. 220 mm)

E-CTFE-coated	
Chamber	ø 64 x 2 mm
Chamber end top	Flanged Options: - Vent flange
Chamber end bottom	Flanschverbindung Options: - drain flange
Process connection	Flange EN 1092-1, DN10 - DN100, PN16 Flange ANSI B 16.5, 1/2" - 4" Class 150 - Class 300
Distance centre-to-centre M...	Min. 150 mm to max. ... mm (overall chamber length max. 2500 mm) on dimensions > 2500 mm - chamber separated with flange
Material	Stainless steel 316 Ti (1.4571) coated E-CTFE internally, Option: anti-static
Nominal pressure	Max. 16 bar
Temperature range	depending on liquid
Float	Stainless steel 316Ti E-CTFE-coated Titanium Grade 2 E-CTFE-coated Float design according to process parameters S.G., pressure and temperature (see type code page 15)
Magnetic roller display	Typ MRA... for technical data and further designs and options see page 20-21
Further options:	
Magnetic switches	See page 22-27
Level sensors	See page 28-32

Other designs on request

Bypass Magnetic Level Indicators / Gauges ETFE-coated

Design: BNA - ../16 - M.... - VET70x2 - MRA
Pressure Equipment Directive 97/23/EG

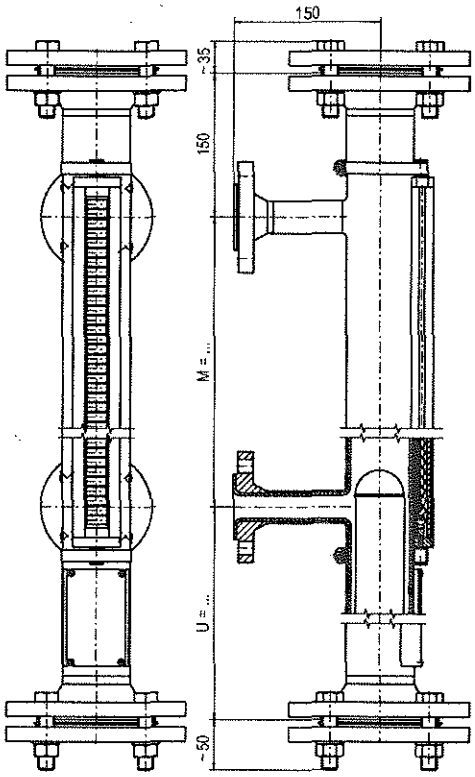

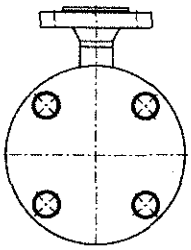

M = Centre-to-centre process connection
U = Length of float (min. 2500 mm)

E-TFE-coated	
Chamber	ø 70 x 2 mm
Chamber end top	Flanged DN 65 PN 16 or ANSI 2 1/2" Class 150 Options: - Vent flange
Chamber end bottom	Flanged DN 65 PN 16 or ANSI 2 1/2" Class 150 Options: - Drain flange
Process connection	Flange EN 1092-1, DN10 - DN100, PN16 Flange ANSI B 16.5 1/2" - 4" Class 150 - Class 300
Distance centre-to-centre M...	min. 150 mm to max. ... mm (overall chamber length max. 2500 mm) on dimensions > 2500 mm - chamber separated with flange
Material	Stainless steel 316 Ti (1.4571) coated E-TFE internally 3 - 4 mm (Chemresist)
Nominal pressure	Max. 16 bar
Temperature range	depending on liquid
Float	Stainless steel 316Ti E-CTFE-coated Titanium Grade 2 E-CTFE-coated Stainless steel 316Ti PFA-coated Titanium Grade 2 PFA-coated Float design according to process parameters S.G., pressure and temperature (see type code page 15)
Magnetic roller display	Typ MRA... for technical data and further designs and options see page 20-21
Further options: Magnetic switches Level sensors	 See page 22-27 See page 28-32

Other designs on request

Bypass Magnetic Level Indicators / Gauges PTFE-lined

Design: BNA - ../16 - M.... - VTF70x2 - MRA
Pressure Equipment Directive 97/23/EG

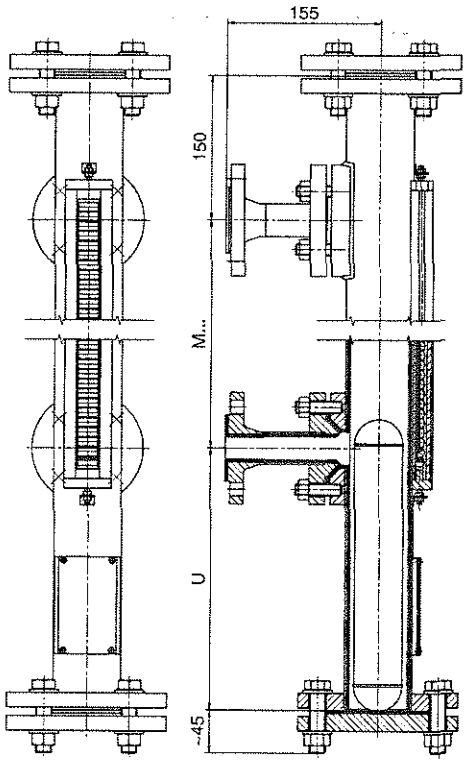

M = Centre-to-centre process connection
U = Length of float (min. 220 mm)

PTFE-lined	
Chamber	ø 70 x 2 mm
Chamber end top	Flanged Options: - Vent flange
Chamber end bottom	Flanged Options: - Drain flange
Process connection	Flange EN 1092-1, DN25, PN16 Flange ANSI B 16.5, 1" Class 150 - Class 300
Distance centre-to-centre M...	min. 150 mm to max. ... mm (overall chamber length max. 2000 m on dimensions > 2000 mm - chamber separated with fl ange
Material	Stainless steel 316 Ti (1.4571) coated PTFE internally Lining: 3 mm wall thickness, vacuum-proof Option: anti-static
Nominal pressure	Max. 10 bar
Temperature range	depending on liquid
Float	Stainless steel 316Ti E-CTFE-coated Titanium Grade 2 E-CTFE-coated Stainless steel 316Ti PFA-coated Titanium Grade 2 PFA-coated Float design according to process parameters S.G., pressure and temperature (see type code page 15)
Magnetic roller display	Typ MRA... for technical data and further designs and options see page 20-21
Further options: Magnetic switches Level sensors	 See page 22-27 See page 28-32

Other designs on request

Bypass Magnetic Level Indicators / Gauges of PVDF, PP

Design: BNA - ../16 - M.... - PF63x3 - MRA
BNA - ../16 - M.... - PP63x3 - MRA

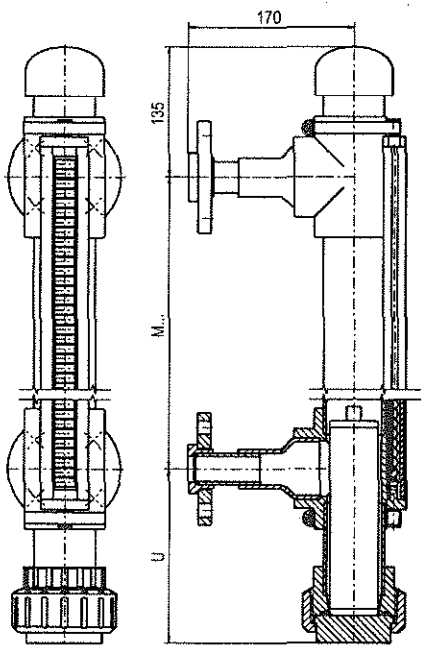

M = Centre-to-centre process connection
U = Length of float (mind. 155 mm)

Magnetic Level Indicators / Gauges PVDF, PP	
Chamber	ø 63 x 3 mm
Chamber end top	Welding cap Options: - Threaded fi tting - Vent valve - Vent fl ange
Chamber end bottom	Threaded fi tting Options: - Drain valve - Drain fl ange
Process connection	Flange EN 1092-1, DN10 - DN50 PN6 - PN 16 Flange ANSI B 16.5, 1/2" - 2" Class 150 Welding stubs 1/2" - 1"
Distance centre-to-centre M...	Min. 200 mm to max. 4000 mm
Material	PVDF, PP
Nominal pressure	Max. 4 bar
Temperature range	PVDF max. 80 °C PP max. 60 °C
Float	PVDF PP Float design according to type code (see page 15)
Magnetic roller display	Typ MRA.... for technical data and further designs and options see page 20-21
Further options: Magnetic switches Level sensors	 See page 22-27 See page 28-32

Other designs on request

Bypass Floats

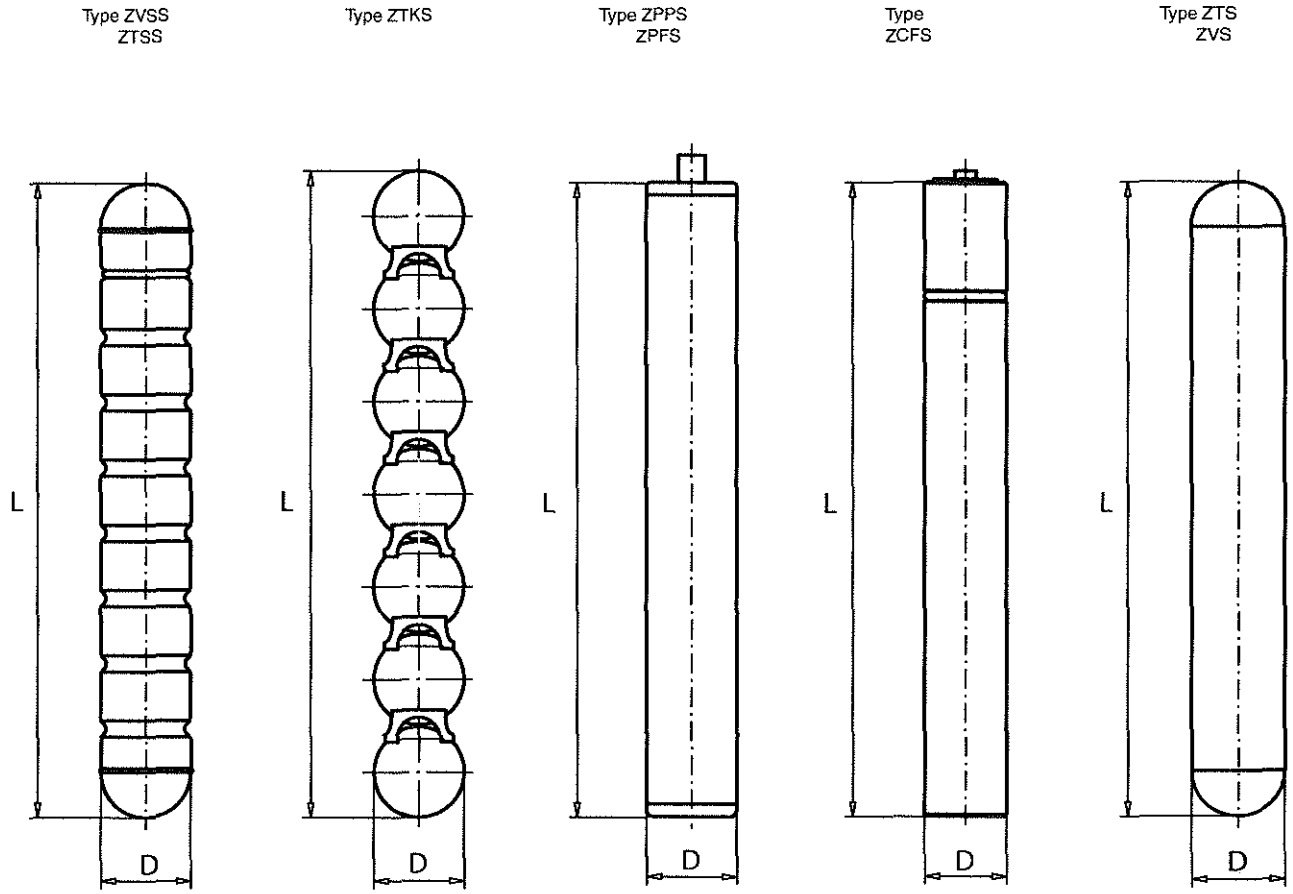

Bypass Floats

Type Code	Max. Pressure bar	Max. Temperature °C	Density kg/m³	Ø mm	Length mm	Material
Cylinder float PN6						
ZBS 35/120	**6**	80	800 - 2000	35	120	Buna
ZPFS 150	**6**	80	1340 - 2000	50	150	PVDF
ZPFS 200	**6**	80	1070 - 1480	50	200	PVDF
ZPFS 250	**6**	80	930 - 1140	50	250	PVDF
ZPFS 300	**6**	80	850 - 980	50	300	PVDF
ZPFS 350	**6**	80	790 - 890	50	350	PVDF
ZPPS 150	**6**	60	1200 - 2000	50	150	PP
ZPPS 200	**6**	60	910 - 1320	50	200	PP
ZPPS 250	**6**	60	750 - 970	50	250	PP
ZPPS 300	**6**	60	660 - 790	50	300	PP
ZPPS 350	**6**	60	590 - 690	50	350	PP
Cylinder float PN16						
ZVS 32/125/PN16/ A990	**16**	400	1270 - 2000	32	125	Edelstahl (1.4571)
ZVS 32/150/PN16/ A990	**16**	400	1090 - 1350	32	150	Edelstahl (1.4571)
ZVS 32/180/PN16/ A990	**16**	400	940 - 1110	32	180	Edelstahl (1.4571)
ZVS 32/210/PN16/ A990	**16**	400	850 - 980	32	210	Edelstahl (1.4571)
ZVS 32/245/PN16/ A990	**16**	400	780 - 880	32	245	Edelstahl (1.4571)
ZVS 32/285/PN16/ A990	**16**	400	730 - 800	32	285	Edelstahl (1.4571)
Cylinder float PN25						Edelstahl (1.4571)
ZVSS 150	**25**	250	1230 - 2000	50	150	Edelstahl (1.4571)
ZVSS 200	**25**	250	1030 - 1250	50	200	Edelstahl (1.4571)
ZVSS 250	**25**	250	820 - 1050	50	250	Edelstahl (1.4571)
ZVSS 300	**25**	250	730 - 840	50	300	Edelstahl (1.4571)
ZVSS 350	**25**	250	680 - 770	50	350	Edelstahl (1.4571)
ZVSS 400	**25**	250	640 - 710	50	400	Edelstahl (1.4571))
ZVSS 450	**25**	250	600 - 660	50	450	Edelstahl (1.4571))
ZTSS 200	**25**	250	780 - 980	50,8	200	Titan (3.7035)
ZTSS 250	**25**	250	650 - 780	50,8	250	Titan (3.7035)
ZTSS 300	**25**	250	610 - 710	50,8	300	Titan (3.7035)
ZTSS 350	**25**	250	550 - 620	50,8	350	Titan (3.7035)
ZTSS 400	**25**	250	510 - 570	50,8	400	Titan (3.7035)
ZTSS 450	**25**	250	480 - 530	50,8	450	Titan (3.7035)
ZVSS 150/PN25/R48H	**25**	200	990 - 2000	50	150	Edelstahl (1.4571)
ZVSS 185/PN25/R48H	**25**	200	830 - 1010	50	185	Edelstahl (1.4571)
ZVSS 225/PN25/R48H	**25**	200	730 - 850	50	225	Edelstahl (1.4571)
ZVSS 275/PN25/R48H	**25**	200	640 - 750	50	275	Edelstahl (1.4571)
ZVSS 335/PN25/R48H	**25**	200	590 - 660	50	335	Edelstahl (1.4571)
ZVSS 400/PN25/R48H	**25**	200	550 - 610	50	400	Edelstahl (1.4571)
ZVSS 470/PN25/R48H	**25**	200	520 - 570	50	470	Edelstahl (1.4571)
ZVSS 555/PN25/R48H	**25**	200	490 - 540	50	555	Edelstahl (1.4571)
ZVSS 650/PN25/R48H	**25**	200	470 - 510	50	650	Edelstahl (1.4571)
ZVSS 760/PN25/R48H	**25**	200	460 - 490	50	760	Edelstahl (1.4571)
ZTSS 150/PN25/R48H	**25**	200	820 - 2000	50,8	150	Titan (3.7035)
ZTSS 180/PN25/R48H	**25**	200	710 - 840	50,8	180	Titan (3.7035)
ZTSS 215/PN25/R48H	**25**	200	600 - 730	50,8	215	Titan (3.7035)

Bypass Floats

Type Code	Max. Pressure bar	Max. Temperature °C	Density kg/m³	Ø mm	Length mm	Material
Cylinder float PN25						
ZTSS 250/PN25/R48H	**25**	200	540 - 620	50,8	250	Titan (3.7035)
ZTSS 300/PN25/R48H	**25**	200	480 - 560	50,8	300	Titan (3.7035)
ZTSS 355/PN25/R48H	**25**	200	430 - 500	50,8	355	Titan (3.7035)
ZTSS 410/PN25/R48H	**25**	200	400 - 450	50,8	410	Titan (3.7035)
ZTSS 465/PN25/R48H	**25**	200	380 - 420	50,8	465	Titan (3.7035)
ZTSS 525/PN25/R48H	**25**	200	370 - 400	50,8	525	Titan (3.7035)
ZTSS 595/PN25/R48H	**25**	200	360 - 390	50,8	595	Titan (3.7035)
ZTSS 680/PN25/R48H	**25**	200	340 - 380	50,8	680	Titan (3.7035)
ZTSS 765/PN25/R48H	**25**	200	320 - 360	50,8	765	Titan (3.7035)
ZVS 200/2,5/200/1160/K74	**25**	200	1050 - 2000	50	200	Edelstahl (1.4571)
ZVS 250/2,5/200/960/K74	**25**	200	890 - 1170	50	250	Edelstahl (1.4571)
ZVS 300/2,5/200/850/K74	**25**	200	800 - 970	50	300	Edelstahl (1.4571)
ZVS 350/2,5/200/775/K74	**25**	200	740 - 860	50	350	Edelstahl (1.4571)
ZVS 400/2,5/200/720/K74	**25**	200	695 - 810	50	400	Edelstahl (1.4571)
ZVS 450/2,5/200/680/K74	**25**	200	660 - 770	50	450	Edelstahl (1.4571)
ZTS 150/2,5/200/1380/K74	**25**	200	1190 - 2000	50	150	Titan (3.7035)
ZTS 200/2,5/200/1000/K74	25	200	910 - 1340	50	200	Titan (3.7035)
ZTS 250/2,5/200/830/K74	**25**	200	770 - 980	50	250	Titan (3.7035)
ZTS 300/2,5/200/730/K74	**25**	200	690 - 810	50	300	Titan (3.7035)
ZTS 350/2,5/200/660/K74	**25**	200	630 - 740	50	350	Titan (3.7035)
ZTS 400/2,5/200/610/K74	**25**	200	590 - 690	50	400	Titan (3.7035)
ZTS 450/2,5/200/580/K74	**25**	200	560 - 650	50	450	Titan (3.7035)
ZTS 500/2,5/200/550/K74	**25**	200	540 - 620	50	500	Titan (3.7035)
Cylinder float PN40						
ZTS 150/PN40/K92	**40**	250	1060 - 2000	50,8	150	Titan (3.7035)
ZTS 180/PN40/K92	**40**	250	900 - 1080	50,8	180	Titan (3.7035)
ZTS 215/PN40/K92	**40**	250	780 - 920	50,8	215	Titan (3.7035)
ZTS 255/PN40/K92	**40**	250	700 - 800	50,8	255	Titan (3.7035)
ZTS 300/PN40/K92	**40**	250	630 - 720	50,8	300	Titan (3.7035)
ZTS 345/PN40/K92	**40**	250	580 - 650	50,8	345	Titan (3.7035)
ZTS 405/PN40/K92	**40**	250	540 - 600	50,8	405	Titan (3.7035)
ZTS 465/PN40/K92	**40**	250	510 - 560	50,8	465	Titan (3.7035)
ZTS 530/PN40/K92	**40**	250	490 - 530	50,8	530	Titan (3.7035)
ZTS 610/PN40/K92	**40**	250	470 - 510	50,8	610	Titan (3.7035)
ZTS 150/PN40/R48H	**40**	190	900 - 2000	50,8	150	Titan (3.7035)
ZTS 185/PN40/R48H	**40**	190	760 - 920	50,8	185	Titan (3.7035)
ZTS 225/PN40/R48H	**40**	190	660 - 780	50,8	225	Titan (3.7035)
ZTS 270/PN40/R48H	**40**	190	590 - 680	50,8	270	Titan (3.7035)
ZTS 320/PN40/R48H	**40**	190	540 - 610	50,8	320	Titan (3.7035)
ZTS 385/PN40/R48H	**40**	190	500 - 560	50,8	385	Titan (3.7035)
ZTS 465/PN40/R48H	**40**	190	470 - 520	50,8	465	Titan (3.7035)
ZTS 550/PN40/R48H	**40**	190	450 - 490	50,8	550	Titan (3.7035)
ZTS 635/PN40/R48H	**40**	190	430 - 470	50,8	635	Titan (3.7035)
ZTS 60/150/PN40/K74	**40**	200	1060 - 2000	50,8	150	Titan (3.7035)
ZTS 60/180/PN40/K74	**40**	200	890 - 1070	50,8	180	Titan (3.7035)

Bypass Floats

Type Code	Max. Pressure bar	Max. Temperature °C	Density kg/m³	Ø mm	Length mm	Material
Cylinder float PN40						
ZTS 60/210/PN40/K74	40	200	790 - 900	50,8	210	Titan (3.7035)
ZTS 60/245/PN40/K74	40	200	700 - 800	60	245	Titan (3.7035)
ZTS 60/285/PN40/K74	40	200	640 - 710	60	285	Titan (3.7035)
ZTS 60/325/PN40/K74	40	200	590 - 650	60	325	Titan (3.7035)
ZTS 60/370/PN40/K74	40	200	550 - 600	60	370	Titan (3.7035)
ZTS 60/425/PN40/K74	40	200	520 - 560	60	425	Titan (3.7035)
ZTS 60/475/PN40/K74	40	200	500 - 530	60	475	Titan (3.7035)
ZTS 60/540/PN40/K74	40	200	470 - 510	60	540	Titan (3.7035)
ZTS 60/605/PN40/K74	40	200	460 - 480	60	605	Titan (3.7035)
ZVS 32/125/PN40/A990	40	400	1360 - 2000	32	125	Edelstahl (1.4571)
ZVS 32/155/PN40/A990	40	400	1140 - 1400	32	155	Edelstahl (1.4571)
ZVS 32/185/PN40/A990	40	400	1010 - 1180	32	185	Edelstahl (1.4571)
ZVS 32/225/PN40/A990	40	400	900 - 1020	32	225	Edelstahl (1.4571)
ZVS 32/265/PN40/A990	40	400	820 - 910	32	265	Edelstahl (1.4571)
ZVS 32/315/PN40/A990	40	400	760 - 830	32	315	Edelstahl (1.4571)
ZTS 32/125/PN40/A990	40	400	1130 - 2000	32	125	Titan (3.7035)
ZTS 32/160/PN40/A990	40	400	900 - 1140	32	160	Titan (3.7035)
ZTS 32/200/PN40/A990	40	400	770 - 910	32	200	Titan (3.7035)
ZTS 32/240/PN40/A990	40	400	670 - 780	32	240	Titan (3.7035)
ZTS 32/290/PN40/A990	40	400	610 - 680	32	290	Titan (3.7035)
ZTS 32/350/PN40/A990	40	400	560 - 620	32	350	Titan (3.7035)
ZTS 32/420/PN40/A990	40	400	530 - 570	32	420	Titan (3.7035)
ZTS 32/510/PN40/A990	40	400	490 - 540	32	510	Titan (3.7035)
Cylinder float PN64						
ZTS 150/PN64/K92	64	250	1190 - 2000	50,8	150	Titan (3.7035)
ZTS 180/PN64/K92	64	250	1000 - 1210	50,8	180	Titan (3.7035)
ZTS 215/PN64/K92	64	250	880 - 1020	50,8	215	Titan (3.7035)
ZTS 255/PN64/K92	64	250	780 -900	50,8	255	Titan (3.7035)
ZTS 295/PN64/K92	64	250	710 - 800	50,8	295	Titan (3.7035)
ZTS 350/PN64/K92	64	250	660 - 730	50,8	350	Titan (3.7035)
ZTS 405/PN64/K92	64	250	610 - 680	50,8	405	Titan (3.7035)
ZTS 470/PN64/K92	64	250	580 - 630	50,8	470	Titan (3.7035)
ZTS 555/PN64/K92	64	250	550 - 600	50,8	555	Titan (3.7035)
ZTS 630/PN64/K92	64	250	530 - 570	50,8	630	Titan (3.7035)
ZTS 150/PN64/R48H	64	190	1030 - 2000	50,8	150	Titan (3.7035)
ZTS 180/PN64/R48H	64	190	880 - 1050	50,8	180	Titan (3.7035)
ZTS 215/PN64/R48H	64	190	770 - 900	50,8	215	Titan (3.7035)
ZTS 260/PN64/R48H	64	190	690 - 790	50,8	260	Titan (3.7035)
ZTS 315/PN64/R48H	64	190	630 - 710	50,8	315	Titan (3.7035)
ZTS 370/PN64/R48H	64	190	580 - 650	50,8	370	Titan (3.7035)
ZTS 445/PN64/R48H	64	190	550 - 600	50,8	445	Titan (3.7035)
ZTS 515/PN64/R48H	64	190	520 - 570	50,8	515	Titan (3.7035)
ZTS 605/PN64/R48H	64	190	500 - 540	50,8	605	Titan (3.7035)
ZTS 685/PN64/R48H	64	190	480 - 520	50,8	685	Titan (3.7035)

Bypass Floats

Type Code	Max. Pressure bar	Max. Temperature °C	Density kg/m³	Ø mm	Length mm	Material
Cylindrical float PN100						
ZTS 150/PN100/K92	**100**	250	1270 - 2000	50,8	150	Titan (3.7035)
ZTS 180/PN100/K92	**100**	250	1080 - 1290	50,8	180	Titan (3.7035)
ZTS 210/PN100/K92	**100**	250	940 - 1100	50,8	210	Titan (3.7035)
ZTS 250/PN100/K92	**100**	250	850 - 960	50,8	250	Titan (3.7035)
ZTS 295/PN100/K92	**100**	250	770 - 870	50,8	295	Titan (3.7035)
ZTS 345/PN100/K92	**100**	250	710 - 790	50,8	345	Titan (3.7035)
ZTS 400/PN100/K92	**100**	250	660 - 730	50,8	400	Titan (3.7035)
ZTS 460/PN100/K92	**100**	250	630 - 680	50,8	460	Titan (3.7035)
ZTS 525/PN100/K92	**100**	250	600 - 650	50,8	525	Titan (3.7035)
ZTS 605/PN100/K92	**100**	250	580 - 620	50,8	605	Titan (3.7035)
ZTS 150/PN100/R48H	**100**	190	1100 - 2000	50,8	150	Titan (3.7035)
ZTS 185/PN100/R48H	**100**	190	940 - 1120	50,8	185	Titan (3.7035)
ZTS 225/PN100/R48H	**100**	190	830 - 970	50,8	225	Titan (3.7035)
ZTS 275/PN100/R48H	**100**	190	760 - 860	50,8	275	Titan (3.7035)
ZTS 330/PN100/R48H	**100**	190	700 - 770	50,8	330	Titan (3.7035)
ZTS 400/PN100/R48H	**100**	190	660 - 710	50,8	400	Titan (3.7035)
ZTS 435/PN100/R48H	**100**	190	630 - 670	50,8	435	Titan (3.7035)
ZTS 525/PN100/R48H	**100**	190	600 - 640	50,8	525	Titan (3.7035)
ZTS 625/PN100/R49H	**100**	190	580 - 610	50,8	625	Titan (3.7035)
Ball segment float PN250						
ZTKS 50/210/K74	**250**	250	1200 - 2000	50	207	Titan (3.7035)
ZTKS 50/260/K74	**250**	250	1050 - 1220	50	260	Titan (3.7035)
ZTKS 50/320/K74	**250**	250	960 - 1070	50	312	Titan (3.7035)
ZTKS 50/370/K74	**250**	250	900 - 980	50	365	Titan (3.7035)
ZTKS 50/420/K74	**250**	250	850 - 920	50	417	Titan (3.7035)
ZTKS 50/470/K74	**250**	250	810 - 870	50	470	Titan (3.7035)
ZTKS 50/530/K74	**250**	250	780 - 830	50	522	Titan (3.7035)
ZTKS 50/580/K74	**250**	250	760 - 800	50	575	Titan (3.7035)
ZTKS 59/250/K74	**250**	250	950 - 2000	59	245	Titan (3.7035)
ZTKS 59/310/K74	**250**	250	850 - 970	59	307	Titan (3.7035)
ZTKS 59/370/K74	**250**	250	780 - 870	59	369	Titan (3.7035)
ZTKS 59/440/K74	**250**	250	740 - 800	59	431	Titan (3.7035)
ZTKS 59/500/K74	**250**	250	700 - 760	59	493	Titan (3.7035)
ZTKS 59/560/K74	**250**	250	680 - 720	59	555	Titan (3.7035)
ZTKS 59/620/K74	**250**	250	660 - 700	59	617	Titan (3.7035)
ZTKS 59/680/K74	**250**	250	640 - 680	59	679	Titan (3.7035)

Magnetic Roller Display

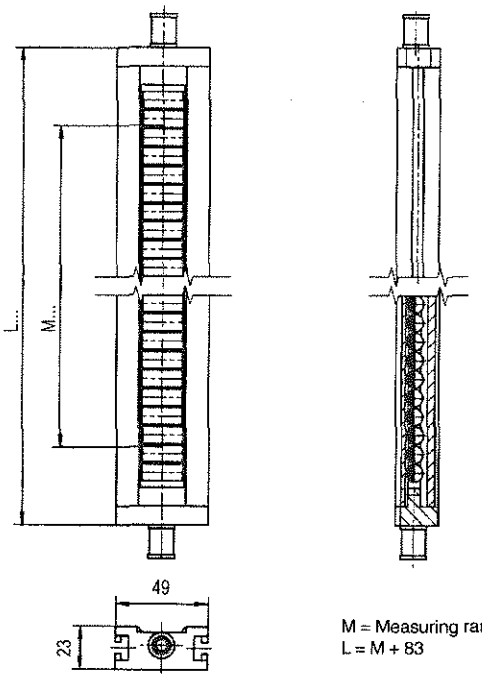

M = Measuring range
L = M + 83

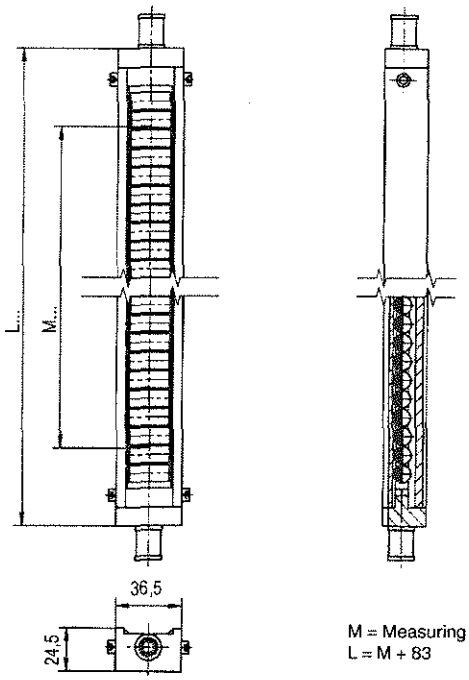

M = Measuring range
L = M + 83

Typ MRA... / Typ MRK...		
Technical data	MRA	MRK
Housing	Aluminium anodised	
Rollers	Crastin PBT red and white	Ceramics red and white
Cover	Makrolon PC	Glass
Max. ambient temperat.	200 °C	450 °C

Typ MNAV... / Typ MNKV...		
Technical data	MNAV	MNKV
Housing	Aluminium, Stainless steel-lined	
Rollers	Crastin PBT red and white	Ceramics red and white
Cover	Makrolon PC	Glass
Max. ambient temperat.	200 °C	450 °C

Magnet-Rollenanzeige

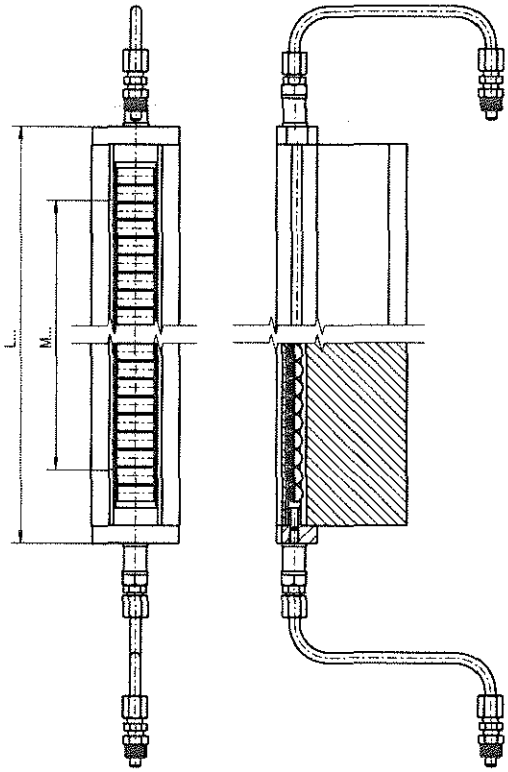

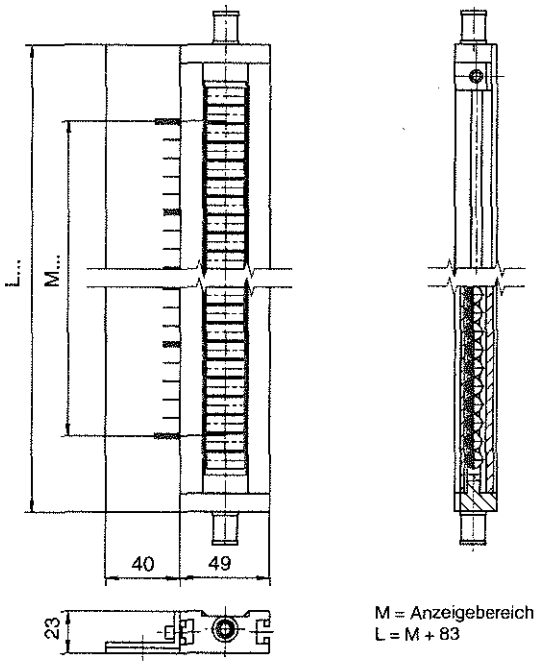

M = Anzeigebereich
L = M + 83

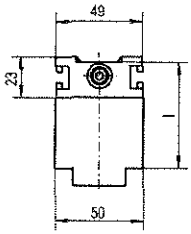

Sight glass extender

M = Measuring range
L = M + 83
I = Insulation thickness

Additional code Plex /P60 = Sight glass extender for chamber isolation 60 mm

/P60S = Sight glass extender for chamber isolation 60 mm with purge

Code	Description
/SKC	= Scale in cm (printed adhesive foil)
/SKP	= Scale in % (printed adhesive foil)
/SAC	= Scale aluminium engraved in cm
/SAM	= Scale aluminium engraved in mm
/SAP	= Scale aluminium engraved in %
/SAX	= Scale aluminium engraved special
/SVC	= Scale stainless steel engraved in cm
/SVM	= Scale stainless steel engraved in mm
/SVP	= Scale stainless steel engraved in %
/SVX	= Scale stainless steel engraved special

Magnetic switches

KSR Magnetic switches are used to monitor certain limits of the level. The obtained binary signal can be forwarded to trigger alarms or other controls.

Connection diagram

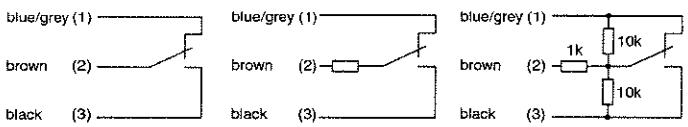

1 switch point | 1 switch point circuit for use on SPS | 1 switch point NAMUR-circuit acc. to DIN EN 60947-5-6

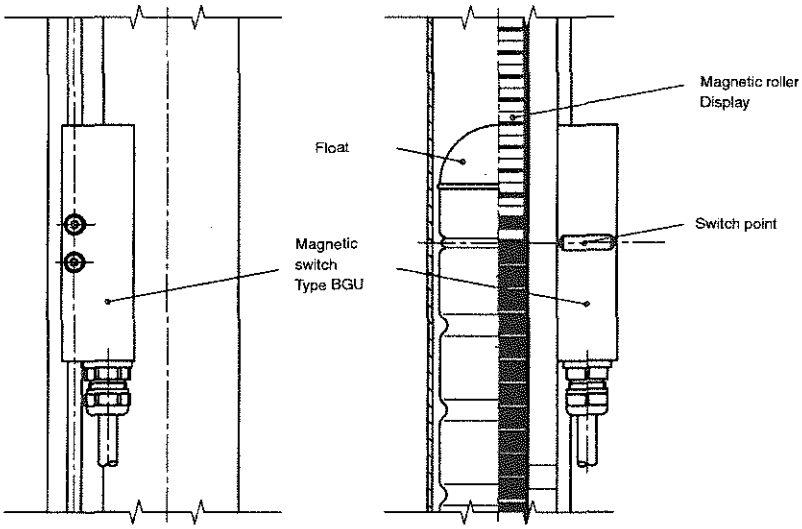

Contact protection measures

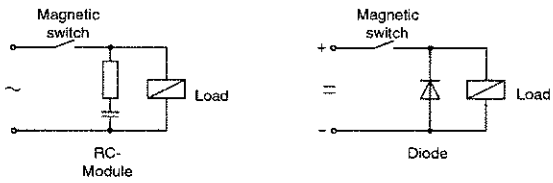

Magnetic Switches Reed, Aluminium housing
Design: BGU

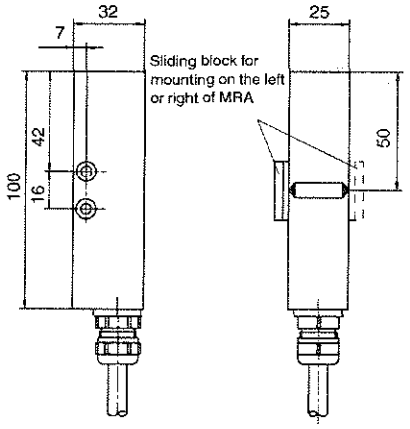

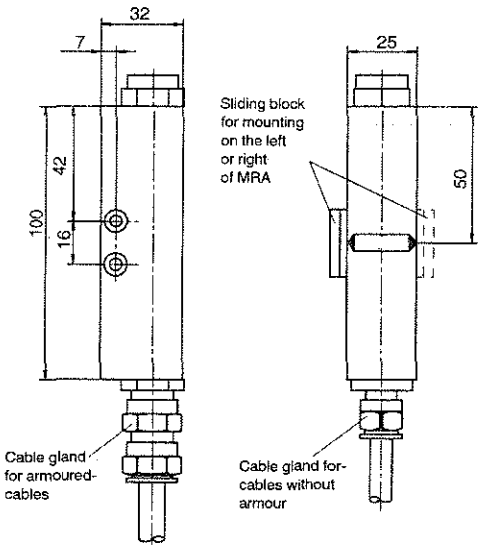

Cable

Code		Type
M	=	BGU-1 PVC
MT	=	BGU-1 Sil
ME	=	BGU-E-1 PVC-blue

Technical Data	
Contact	Reed contact
Contact type	1 SPDT
Schaltverhalten	bistable
Switch rating: Code M, MT Code ME Code adder /N	 230 V AC, 60 VA, 1 A; 230 V DC, 30 W, 0.5 A For use in intrinsically safe circuit only with max. 100 mA und max. 30 V For use in control circuits acc. to DIN EN 60947-5-6
Max. ambient temperature: Code M Code MT Code ME	 90 °C 150 °C T6 to 85 °C
Connection cable: Code M Code MT Code ME	3 x 0.75 mm² 1 m PVC grey 1 m Silicone 1 m PVC blue
Housing	Aluminium, anodised
Housing protection	IP 65
Explosion protection	(Code ME only) II 1 G Ex ia IIC T6 - T3 LCIE 01 ATEX 6047 X

Cable Ex d

Code		Type
MD	=	BGU-Ex d-1 PVC
MDG	=	BGU-Ex d-1 PUR
MDGA	=	BGU-Ex d-1 PURA
MDT	=	BGU-Ex d-1 Sil

Technical data	
Contact	Reed contact
Contact type	1 SPDT
Contact behaviour	bistable
Switch rating Code adder /N	230 V AC, 60 VA, 1 A 230 V DC, 30 W, 0.5 A For use in control circuits acc. to DIN EN 60947-5-6
Max. ambient temperature Code MD, MDG and MDGA Code MDT	 T6 to 85 °C T6 to 85 °C T5 to 100 °C T4 to 135 °C T3 to 150 °C
Connection cable Code MD Code MDG Code MDGA Code MDT	3 x 0.75 mm² PVC grey PUR yellow PUR yellow armoured Silicone
Housing	Aluminium, anodised
Housing protection	IP 68
Explosion protection	II 2 G Ex d IIC T6 - T3 LCIE 01 ATEX 6047 X

Contact protection measures see page 22

Magnetic Switches Reed, Aluminium housing

Design: BGU-M12

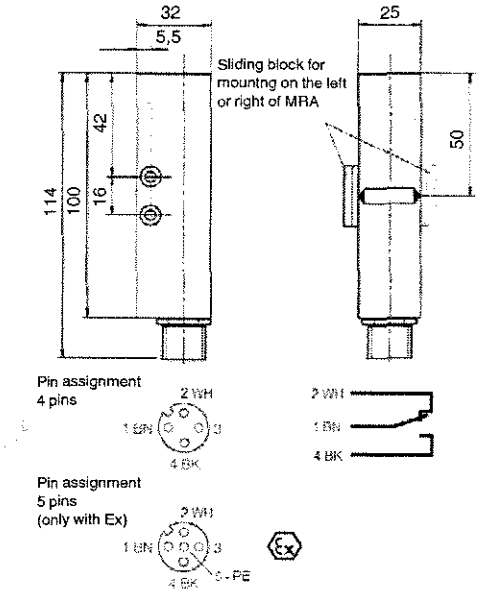

Design: BGU-A

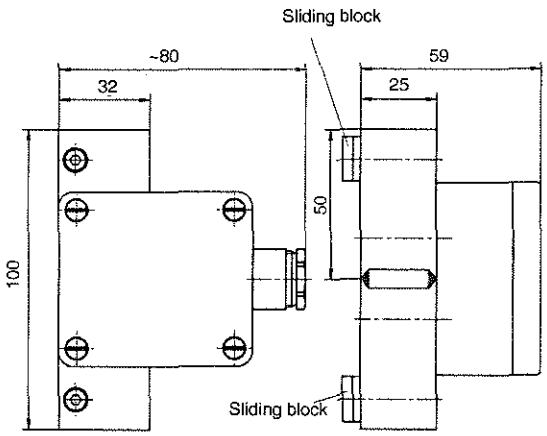

Plug

Code	Type	
MS12	=	BGU-M12
MES12	=	BGU-E-M12

Technical Data	
Contact	Reed contact
Contact type	1 SPDT
Contact behaviour	bistable
Switch rating: Code MS12 Code MES12 Code adder /N	 230 V AC, 60 VA, 1 A; 230 V DC, 30 W, 0.5 A for use in intrinsically safe circuit only with max. 100 mA und max. 30 V For use in control circuits acc. to DIN EN 60947-5-6
Max. ambient temperature: Code MS12 Code MES12	 85 °C T6 to 85 °C
Connction plug: Code MS12	
Housing	Aluminium, anodised
Housing protection	IP 65
Explosion protextion	(Code MES12 only) II 1 G Ex ia IIC T6 - T3 LCIE 01 ATEX 6047 X

Terminal housing

Code		Type
MA	=	BGU-A
MAE	=	BGU-A-E

Technical data	
Contact	Reed contact
Contact type	1 SPDT
Contact behaviour	bistable
Switch rating Code MA Code MAE Code adder /N	230 V AC, 60 VA, 1 A 230 V DC, 30 W, 0.5 A for use in intrinsically safe circuit only with max. 100 mA and max. 30 V for use in control circuits to DIN EN 60947-5-6
Max. ambient temperature Code MA Code MAE	 150 °C T6 bis 85 °C T5 to 100 °C T4 bis135 °C T3 to 150 °C
Housing	Aluminium, anodised
Housing protection	IP 65
Explosion protection	(Code MAE only) II 1 G Ex ia IIC T6 - T3 LCIE 01 ATEX 6047 X

Contact protection measures see page 22

Magnetic Switches Reed, Stainless Steel Housing
Design: BGU-V

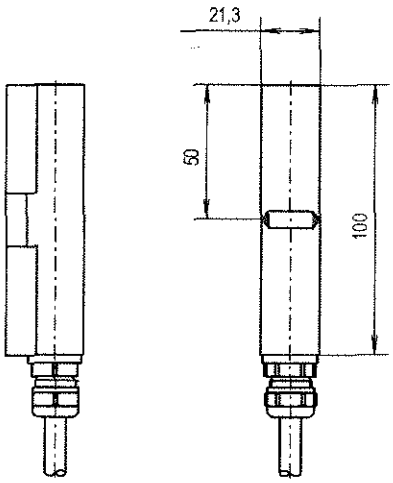

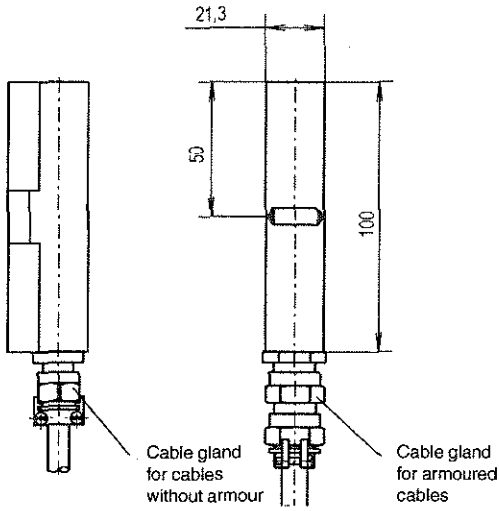

Cable

Code		Type
MV	=	BGU-V- PVC
MVT	=	BGU-V- Sil
Ex MVE	=	BGU-V-E- PVC-blue

Technical data	
Contact	Reed contact
Contact type	1 SPDT
Contact behaviour	bistable
Switch rating Code MV und MVT Code MVE Code adder /N	 230 V AC, 60 VA, 1 A 230 V DC, 30 W, 0,5 A for use in intrinsically safe circuit only with max. 100 mA and max. 30 V for use in control circuits to DIN EN 60947-5-6
Max. ambient temperature Code MV Code MVT Code MVE	 90 °C 150 °C T6 to 85 °C
Connection cablel Code MV Code MVT Code MVE	3 x 0,75 mm2 PVC grey Silicone PVC blue
Housing	Stainless steel 1.4571
Housing protection	IP 65
Explosion protection	II 1 G Ex ia IIC T6 - T3 LCIE 01 ATEX 6047 X (Code MVE only)
Contact protection measures see page 22	

Cable Ex d

Code		Type
Ex MVD	=	BGU-V-Ex d- PVC
Ex MVDG	=	BGU-V-Ex d- PUR
Ex MVDGA	=	BGU-V-Ex d- PURA
Ex MVDT	=	BGU-V-Ex d- Sil

Technical data	
Contact	Reed contact
Contact type	1 SPDT
Contact behaviour	bistable
Switch rating Code adder /N	230 V AC, 60 VA, 1 A 230 V DC, 30 W, 0.5 A for use in control circuits to DIN EN 60947-5-6
Max. ambient temperature Code MVD, MVDG and MVDGA Code MVDT	 T6 to 85 °C T6 to 85 °C T5 to 100 °C T4to 135 °C T3 to 150 °C
Connection cable Code MVD Code MVDG Code MVDGA Code MVDT	3 x 0.75 mm2 PVC grey PUR yellow PUR yellow armoured Silicone
Housing	Stainless steel 1.4571
Housing protection	IP 68
Explosion protection	II 2 G Ex d IIC T6 - T3 LCIE 01 ATEX 6047 X
Contact protection measures see page 22	

Magnetic Switches, Reed High-Temperature

Design: BGU-AHT, Aluminium housing

Mounting with tightening straps

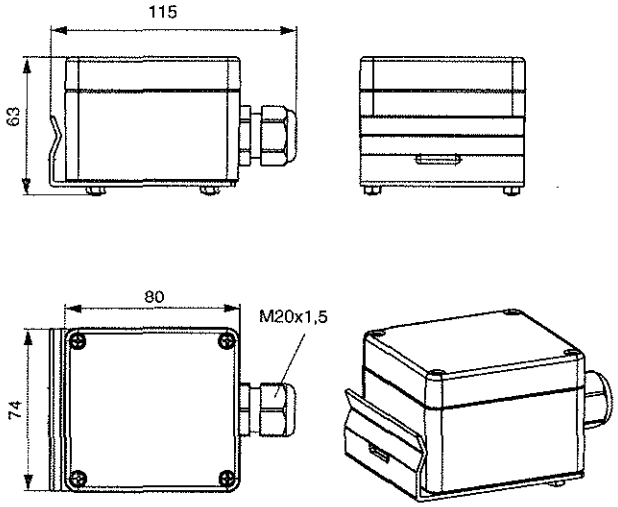

Mounting on MRA with T-slot

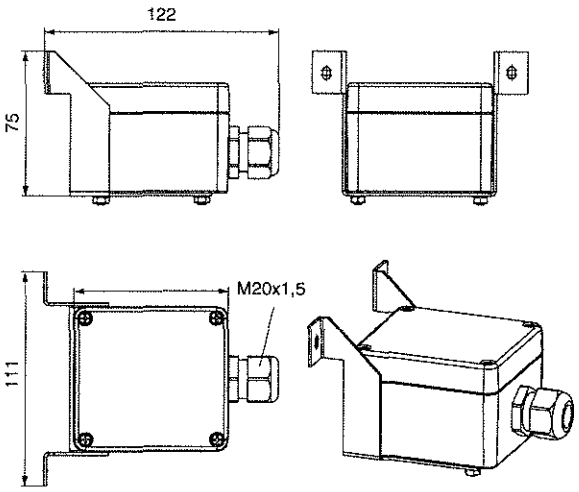

Design: BGU-VHT, stainless-steel housing

Mounting with tightening straps

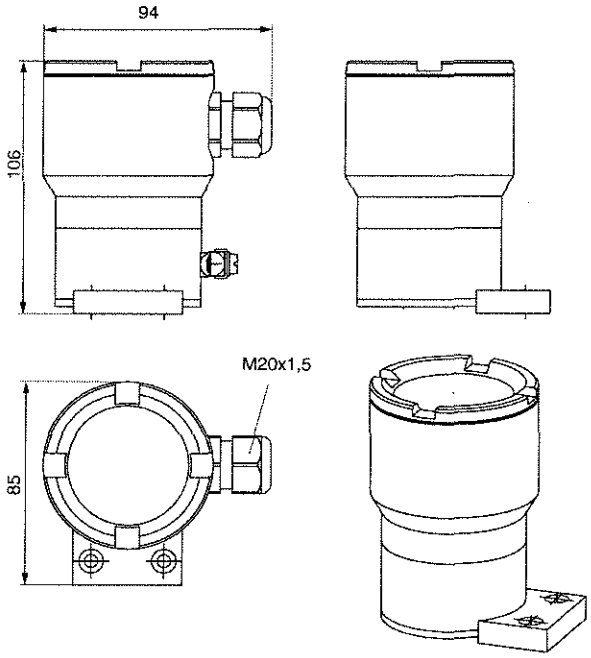

High Temperature

Code		Type
MHT	=	BGU-AHT

Technical Data	
Contact	Reed contact
Contact type	1 SPDT
Contact behaviour	bistable
Switch rating	230 V AC, 60 VA, 1 A 230 V DC, 30 W, 0.5 A
adder /N	for use in control circuits to DIN EN 60947-5-6
Max. ambient temperature	380 °C
Housing	Aluminium
Housing protection	IP 65
Contact protection measures see page 22	

High Temperature

Code		Type
MVHT	=	BGU-VHT

Technical Data	
Contact	Reed contact
Contact type	1 SPDT
Contact behaviour	bistable
Switch rating	230 V AC, 60 VA, 1 A 230 V DC, 30 W, 0.5 A
adder /N	for use in control circuits to DIN EN 60947-5-6
Max. ambient temperature	380 °C
Housing	Stainless-steel
Housing protection	IP 67
Contact protection measures see page 22	

Magnetic Switches, Initiator

Design: BGU-Ai, Aluminium housing

Mounting with tightening straps

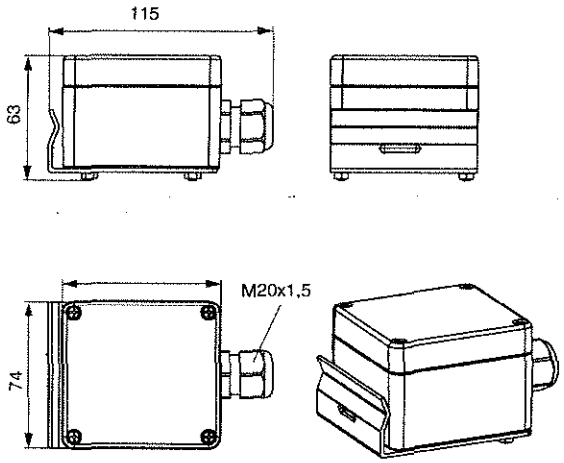

Mounting on MRA with T-slot

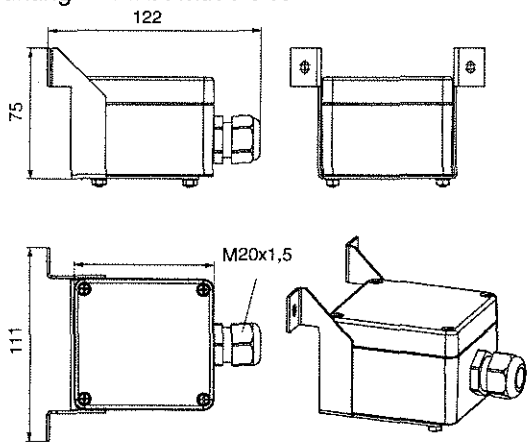

Magnetic Switches, Rotary Magnet

Design: BGU-AR, Aluminium housing

Mounting with tightening straps

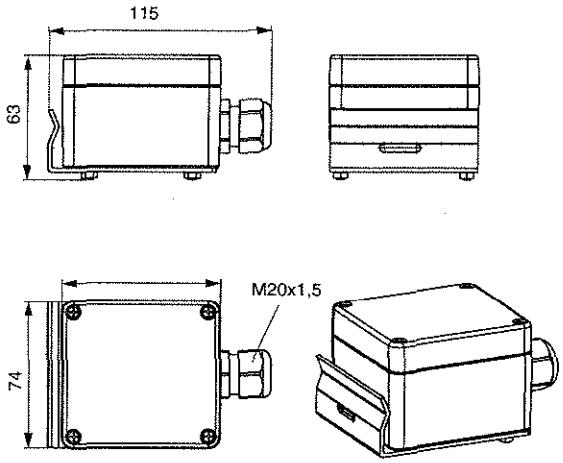

Mounting on MRA with T-slot

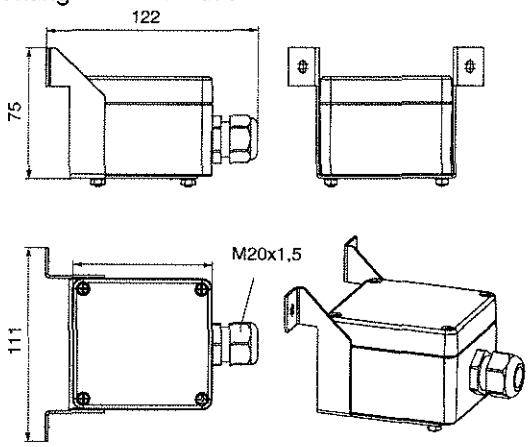

Initiator

Code		Type
MIH	=	BGU-AIH => closing on rising level
MIL	=	BGU-AIL => closing on falling level

Technical Data	
Contact	Inductive proximity switch
Contact behaviour	bistable
Code MIH Funktion Code MIL Funktion	High alarm Low alarm
Nominal voltage	8 V DC (Ri~1 kOhm)
Max. ripple	< 5 %
Supply voltage U_B	5 - 25 V
Power consumption active area free active area covered	 > 3 mA < 1 mA
Connection cable max. resistance	< 100 Ohm
Self-inductance	160 µH
Self-capacitance	20 nF
Ambient temperature	-40 °C to +80 °C
Housing	Aluminium
Housing protection	IP 65

Rotary Magnet, Power Switch

Code		Type
MAR	=	BGU-AR

Technical Data	
Contact	Rotary magnetic with rocker switch
Contact type	1 SPDT
Contact behaviour	bistable
Switch rating	250 VAC, 100 VA, 2 A 200 VDC, 40 W, 2 A
Ambient temperature	-60 °C ... +250 °C
Housing	Aluminium
Housing protection	IP 65

Magnetic Switches, Reed, Ex d
Design: BGU-AD, Aluminium housing

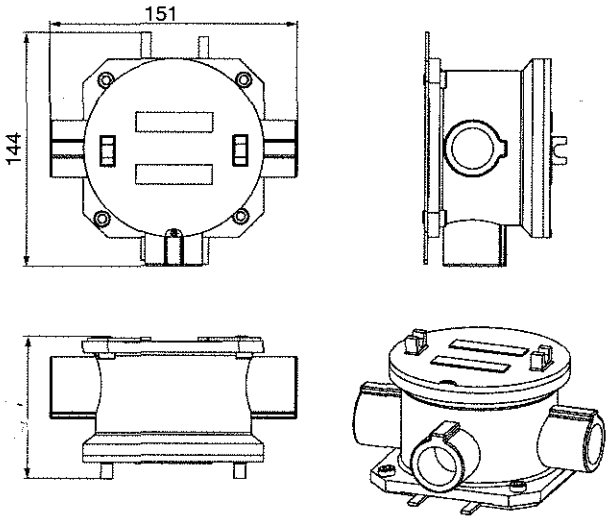

Magnetic Switches, Microswitch, Ex d
Design: BGU-AM, Aluminium housing

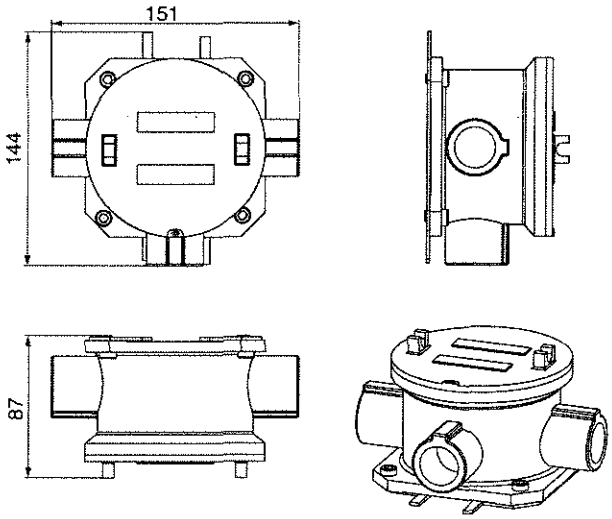

Reed Contact

Code		Type
MAD	=	BGU-AD

Technical Data		
Contact type		Reed contact
Contact function		1 SPDT
Switch behaviour		bistable
Switching capacity		230 V AC, 60 VA, 1 A 230 V DC, 30 W, 0.5 A
Code adder .../N		for use in control circuits acc. to DIN EN 60947-5-6
Max. ambient temp.		-40 ... +55 °C
Terminal box		
Material Terminal box		Aluminium
Max. ambient temp.		T6 to +40 °C T5 to +55 °C tD to +95 °C
Cable entries	BGU-AD0	1/2"NPT(F) with adapter
	BGU-AD1	3/4"NPT(F)
	BGU-AD2	M20x1,5 with adapter
Ingress protection		IP 66
Explosion protection		Ex II 2 G/D EEx d IIC T6-T5 LCIE 02 ATEX 6056

Contact Protection measures see page 22

Microswitch

Code		Type
MAM	=	BGU-AM

Technical Data		
Contact type		Microswitch
Contact function		1 SPDT
Switch behaviour		bistable
Switching capacity		250 V AC, 5 A
Max. ambient temperature		-40 ... +55 °C
Terminal box		
Material Terminal box		Aluminium
Max. ambient temperature		T6 to +40 °C T5 to +55 °C tD to +95 °C
Cable entries	BGU-AM0	1/2"NPT(F) with adapter
	BGU-AM1	3/4"NPT(F)
	BGU-AM2	M20x1,5 with adapter
Ingress protection		IP 66
Explosion protection		Ex II 2 G/D EEx d IIC T6-T5 LCIE 02 ATEX 6056

Level Sensors

KSR Level Sensors are used to measure and transmit the level of liquids in conjunction with a KSR control unit. It is based on the fl oat principle with magnetic transmission in a 3-wire potentiometer circuit. A fl oat with a built-in magnetic system actuates small reed contacts through the walls of the bypass chamber. These reed switches form a resistance measuring chain that continuously generates a voltage proportional to the height of the level.

The resistance measuring chain is closely stepped and is made up from small chips soldered onto a PCB. Due to this assembly the generated voltage is approximately continuous.

Depending on requirements and design several different contact separations are available.

Option:

Installation of 2-wire transmitter in terminal box possible.

Advantage:

- use in hazardous areas possible

Internal circuit diagram level sensors

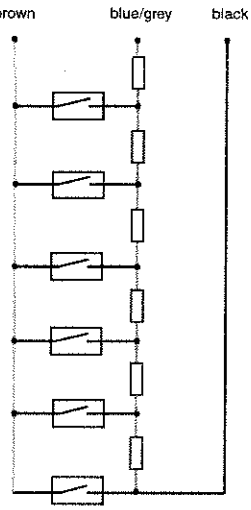

Type code

Code						
3		Basic type				
	MG	Level sensor				
3.1		Electrical connection (terminal box)				
...	A	Aluminium - top	APL	Polyester - top (Ex-design)	AVG	Stainless steel - top with digital display
	AU	Aluminium - bottom	APLU	Polyester - bottom (Ex-design)	AVGU	Stainless steel - bottom with digital display
	AP	Polyester - top	AV4	Edelstahl - top		
	APU	Polyester - bottom	AV4U	Edelstahl - bottom		
3.2		1st key Material Sensor tube		2nd key Contact separation		Optional code
.../...	V	Stainless steel	K18	18 mm		contact separation 5 / 10 / 15 mm only
			K15	15 mm	/HT..	High temperature +120 °C ... +200 °C
			K10	10 mm	/TT..	Low temperature -10 °C ... -80 °C
			K5	5 mm		
3.3		(Option) Head mounted transmitter in terminal box				
...	TS	2-wire Standard				
	TE	2-wire Ex i				
	TLH	2-wire HART® with LCD display				
	TLEH	2-wire Ex i HART® with LCD display				
	T32	2-wire Ex i HART® programmable				
	T53P	Ex i Profibus PA programmable				
	T53F	Foundation Fieldbus programmable				
3.4		1st key Sensor tube length		2nd key Measuring range		3rd key Sensor tube dimensions
.../.../...	L...	Length in mm	M...	Range in mm	14	OD Ø 14 mm
3.5		Optional code				
...	Ex	Ex Control circuit EEx ib IIC or EEx ia IIC, resistance of measuring chain: 3.2 kOhm ... 50 kOhm				

Ordering example

	Basic type		Electrical connection		Material Sensor tube Contact separation		Option Head-mounted transmitter		Sensor tube-length Measuring range Sensor tube-dimensions		Optional code
Code	3	-	3.1	-	3.2	-	3.3	/	3.4	-	3.5
	MG	-	AU	-	VK10	-	TE	/	L1650 / M1500 / 14	-	Ex

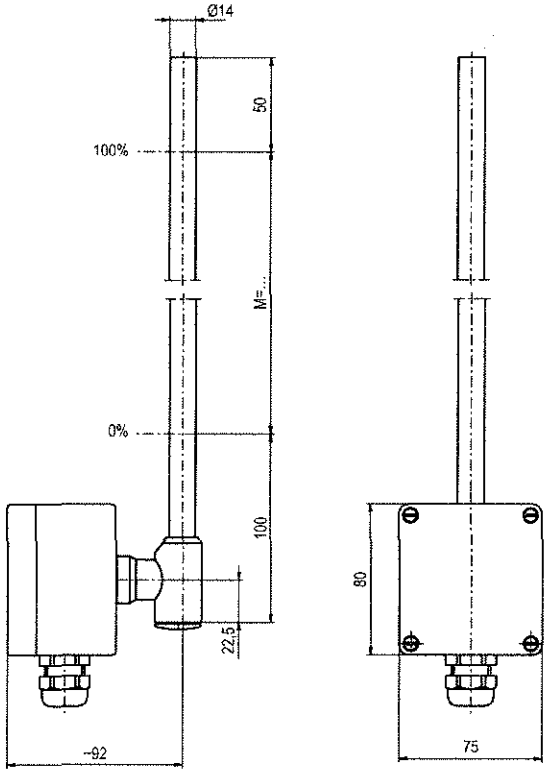

Type: MG-A.VK../.-L../M../14		Type: MG-A.VK../.-L../M../14-Ex	
		Explosion protection	II 2G Ex ia IIC T4-T6 KEMA 01 ATEX1052X II 2D T 80 °C IP6X
erminal box	A. = Aluminium, 80 x 75 x 57 mm AP. = Polyester, 80 x 75 x 55 mm AV4. = Stainless steel	Terminal box	A. = Aluminium, 80 x 75 x 57 mm APL. = Polyester anti-static, 80 x 75 x 55 mm AV4. = Stainless steel
Sensor tube	V = Stainless steel 1.4571 Tube Dia. 14 x 1 mm	Sensor tube	V = Stainless steel 1.4571 Tube Dia. 14 x 1 mm
Contact separation	K18 = 18 mm K15 = 15 mm (HT or TT) K10 = 10 mm (also HT or TT) K5 = 5 mm (also HT or TT)	Contact separation	K18 = 18 mm K15 = 15 mm K10 = 10 mm K5 = 5 mm
Resistance of measuring chain Standard design	depending on length and contact separation	Resistance of measuring chain Standard design	3,2 kOhm ... 50 kOhm
Ambient temperature at sensor tube	Standard design -10 °C ... +120 °C Type code HT +120 °C ... +200 °C Type code TT -10 °C ... -80 °C	Maximal permissible surface temperature at sensor tube	T4 +100 °C T5 +65 °C T6 +50 °C

Level Sensors
Housing options

Type code A. = Aluminium 80 x 75 x 57 mm
Type code AP. = Polyester 80 x 75 x 55 mm
Type code APL. = Polyester 80 x 75 x 55 mm, anti-static

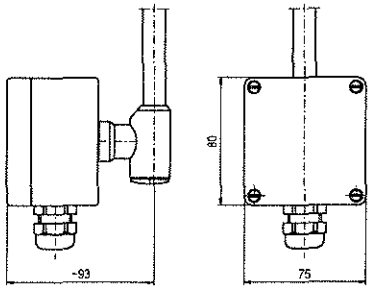

Typcode AV4 = Stainless steel

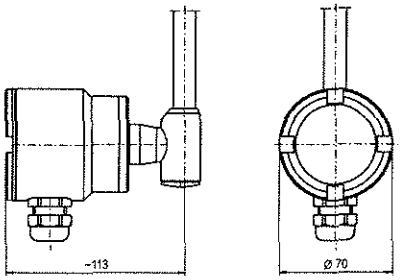

Typcode AVG = Stainless steel
with digital display

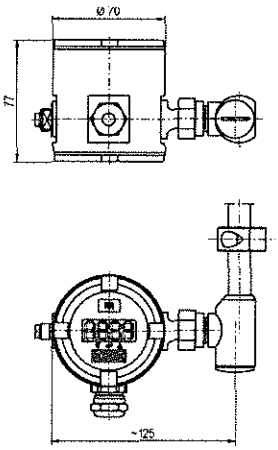

Magnetostrictive Level Sensor

The KSR Level Sensor series is used for continuous, remote liquid level measurement and based on position monitoring of a magnetic float following the magnetostrictive principle. The sensors are mounted externally on a KSR Bypass Level Indicator.

The measuring process is initiated by a current impulse. This current generates an axial magnetic fi eld along the length of a wire made of magnetostrictive material, which is held under tension inside the sensor tube. The Bypass Level Indicator fl oat, which sits on the liquid surface, is fitted with permanent magnets.

The magnetic field of the float is at right angles to the impulse magnetic field. When the pulse reaches the float the two magnetic fields interact and a torsional force results. A torsional stress wave is induced in the wire. A piezoceramic pick-up in the sensor housing at the end of the wire converts this into an electrical signal. By measuring the elapsed transit time, it is possible to determine the start point of the torsional stress wave and therefore the float position with a high degree of accuracy.

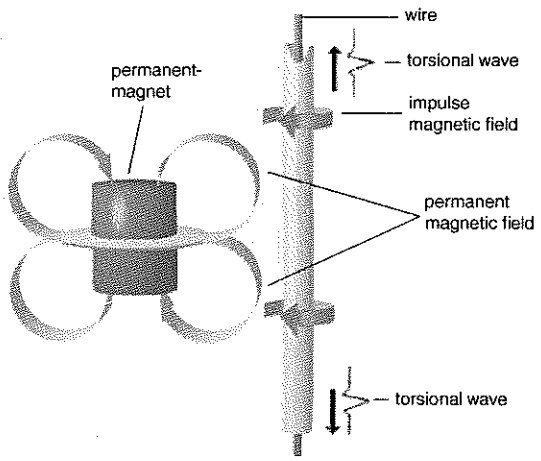

Features

- Continuous level measurement outside on bypass
- 2-wire-technology 4-20 mA
- Signal output via digital interface and one selectable value as analog signal
- Hull parts of stainless steel (display of glass)
- Magnetostrictive level sensor with high resolution

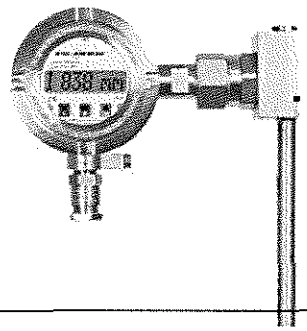

Type code

3	Basic type					
	FFG-BP20	Magnetostrictive Level sensor				
3.1	Interface					
	H	4-20mA with HART® protocol				
3.2	Approval					
	1	Without (standard)				
	2	Ex ia (ATEX)				
3.3	Display					
	N	Without				
	D	With LCD display				
3.4	Position sensor head					
	U	Top				
	D	bottom				
3.5	Electrical connection					
	S	M16x1,5	N	1/2" NPT		
	T	M20x1,5				
3.6	Bypass magnetic system					
	PHO	(Phönix) 710.098/104	K92	(KSR) BNA K92	KRO	(KROHNE) BM
	K48	(KSR) BNA R48H	INT	(INTRA) ITA	VAI	(VAIHINGER) 75
3.7	Measuring length in mm (4-digit with left-hand zeros)					

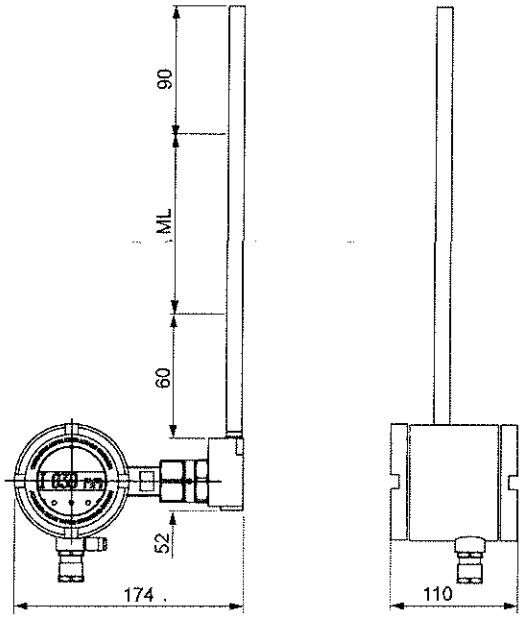

FFG-BP	
Material housing	Stainless steel 316Ti
Sensor lenght SL (depends on positioning and magnet system)	100 ... 3000 mm
Pressure	atmospheric
Storage temperature Media temperature Ambient temperature Standard ..N/..D Ambient temperature Ex i T3/T4/T5/T6 Ambient temperature Ex d T3/T4/T5/T6	-45 °C ... +85 °C -200 °C ... +180 °C -40 °C ... +85/-20 ... +70 °C -20 °C ... +70/+70/+70/+60 °C -40 °C ... +70/+70/+70/+60 °C
Resolution	0,1 mm
Linearity	± 0,5 mm
Reproducibility	< 2,0 mm
Hysteresis (depends on float)	≤ ± 3,25 mm
Ambient temperature coeff.	< ±0,001 % of range/K
Weight	ca. 1,5 kg + 5 g/cm
Supply voltage	24 VDC (-40%/+20%)
Output current	4...20 mA (Namur)
Ambient temperature coeff.	< ± 0,01 %/K
Digital Interface	HART
Wire cross section max.	1,5 mm²
Cable lenght	max. 500 m bei 0,5 mm²
U °/P°	30 V/1 W
L_i /C_i	< 0,3 mH/10 nF
R_x / C_x	5,1 k / 53 nF
Ingress protection EN 60529	IP 67
Ex-classification	II 2 G Ex ia IIC T3...T6 ZELM 10 ATEX 0439 II 2 G Ex d IIB T3 ... T6 Gb ZELM 13 ATEX 0508 X
SIL level:	SIL 2

Options Chamber ends

with dampening spring on request

Chamber end top

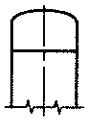

1
Welding cap

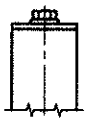

2
Flat top with
vent plug BSP 1/2"

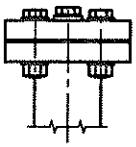

3
Flanged with
vent plug BSP 1/2"

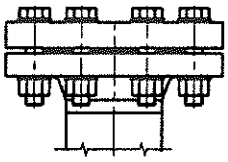

4
Flanged e. g. flange
facings with groove and
tongue acc. to DIN 2512

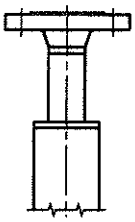

5
Flat top with
vent flange

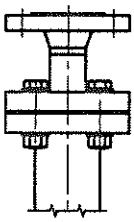

6
Flanged with
vent flange

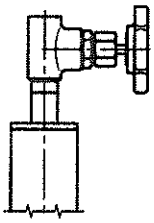

7
Flat top with
vent valve

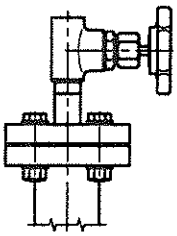

8
Flat top with
vent valve

Unterer Standrohrabschluss

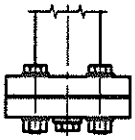

9
Flanged with
drain plug BSP 1/2"

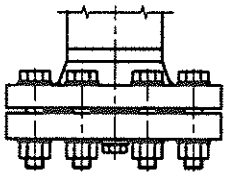

10
Flanged with drain plug
BSP 1/2" e.g. fl ange facings
with groove and tongue
acc. DIN 2512

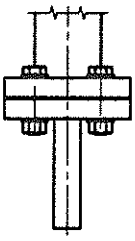

11
Flanged with
drain nozzle

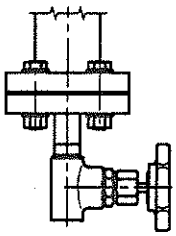

12
Flanged with
drain valve

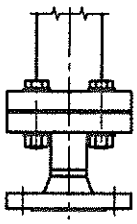

13
Flanged with
drain flange

Options Process connection

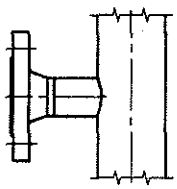

14
Welding neck flanges
up to DN 25 (1")

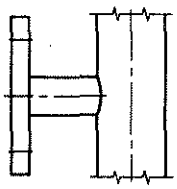

15
Blind flange
above DN 32
(11/4")

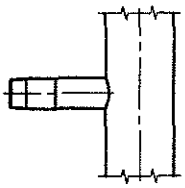

16
Threaded GN...
(Male)

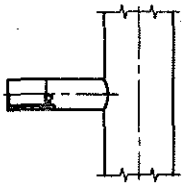

17
Threaded GM...
(Female)

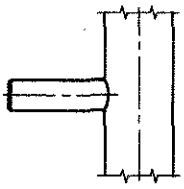

18
Welding stub S...

Examples Process connection

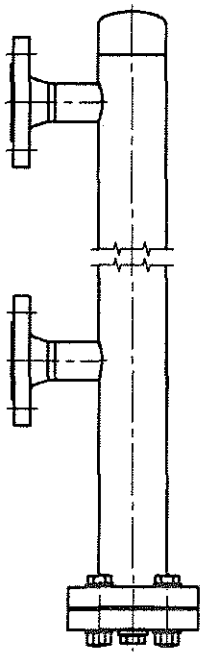

19
Standard
2 process connections
side-side

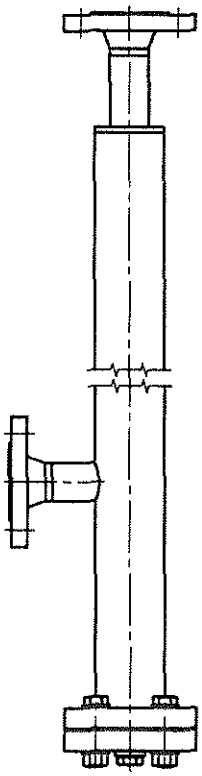

20
Process connections
top and side

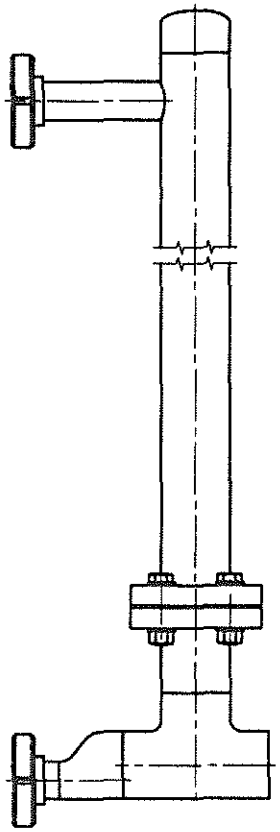

21
2 process connections side-side
threaded acc. to DIN 11851
lower process connection with
eccentric reducer

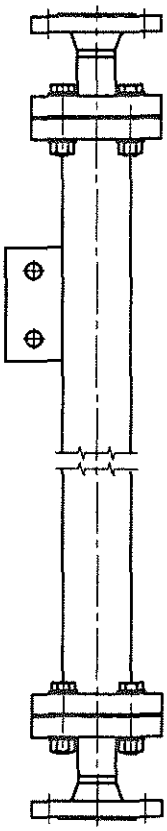

22
2 Process connections
top and bottom
Option: Support brackets

Modifications may take place and materials specified may be replaced by others without prior notice.
Specifications and dimensions given in this leaflet represent the state of engineering at the time of printing.

KSR KUEBLER
A division of the WIKA Group

KSR KUEBLER Niveau-Messtechnik AG
Heinrich-Kuebler-Platz 1
69439 Zwingenberg
Telefon (+49) 6263 87-0
Fax (+49) 6263 8799
E-Mail info@ksr-kuebler.com
www.ksr-kuebler.com

112499

Chapter 2.5

Technical Literature - Pressure Gauge

Bourdon tube pressure gauge
Stainless steel, safety version
Models 232.30, 233.30

Applications

- Increased safety requirements
- With liquid-filled case for applications with high dynamic pressure loads or vibrations [1)]
- For gaseous and liquid aggressive media that are not highly viscous or crystallising, also in aggressive ambience
- Process industry: Chemical/petro-chemical, power stations, mining, on- and offshore, environmental technology, machine building and general plant construction

Special features

- Safety pressure gauge with solid baffle wall designed in compliance with operational safety requirements of EN 837-1
- Excellent load-cycle stability and shock resistance
- All stainless steel construction
- Scale ranges up to 0 ... 1,600 bar

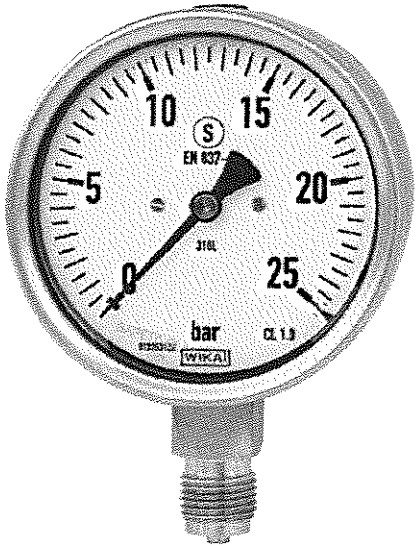

Bourdon tube pressure gauge model 232.30

Description

Design
EN 837-1

Nominal size in mm
63, 100, 160

Accuracy class
NS 63: 1.6
NS 100, 160: 1.0

Scale ranges
NS 63: 0 ... 1 to 0 ... 1,000 bar
NS 100: 0 ... 0.6 to 0 ... 1,000 bar
NS 160: 0 ... 0.6 to 0 ... 1,600 bar
or all other equivalent vacuum or combined pressure and vacuum ranges

1) Model 233.30

Pressure limitation

NS 63:	Steady:	3/4 x full scale value
	Fluctuating:	2/3 x full scale value
	Short time:	Full scale value
NS 100, 160:	Steady:	Full scale value
	Fluctuating:	0.9 x full scale value
	Short time:	1.3 x full scale value

Permissible temperature
Ambient: -40 ... +60 °C without liquid filling
-20 ... +60 °C gauges with glycerine filling [1)]
Medium: +200 °C maximum without liquid filling
+100 °C maximum with liquid filling [1)]

Temperature effect
When the temperature of the measuring system deviates from the reference temperature (+20 °C):
max. ±0.4 %/10 K of full scale value

Ingress protection
IP 65 per EN 60529 / IEC 529
(gauges with back mount: IP 55)

Data sheets showing similar products:
Stainless steel version; model 232.50; see data sheet PM 02.02
High pressure version; model 222.30; see data sheet PM 02.09
For UHP applications, safety pressure gauges; model 232.35; see data sheet PM 02.11

Part of your business

Standard version

Process connection
Stainless steel 316L (NS 63: 1.4571),
lower mount (LM) or lower back mount (LBM) [1]
NS 63: G ¼ B (male), 14 mm flats
NS 100, 160: G ½ B (male), 22 mm flats (NS 160 only lower mount)

Pressure element
Stainless steel 316L
< 100 bar: C-type
≥ 100 bar: Helical type

Movement
Stainless steel

Dial
Aluminium, white, black lettering,
NS 63 with pointer stop pin

Pointer
Aluminium, black

Case
Stainless steel, case with solid baffle wall and blow-out back, scale ranges ≤ 0 ... 16 bar (lower mount) with compensating valve to vent case

Window
Laminated safety glass (NS 63: Polcarbonate)

Bezel ring
Cam ring (bayonet type), stainless steel

Filling liquid (for model 233.30)
Glycerine 99.7 %

1) Connection location back mount only for gauges NS 63 and 100 without liquid filling

Options

- Other process connection
- Sealings (model 910.17, see data sheet AC 09.08)
- Assembly on diaphragm seals see product review DS
- Measuring system Monel (model 262.30)
- Measuring system stainless steel 1.4571
- Panel mounting flange, stainl. steel or polished stainl. steel
- Surface mounting lugs on the back, stainless steel
- Ambient temperatures -40 °C: Silicone oil filling
- Ingress protection IP 66, IP 67
- Pressure gauge with switch contacts, see model PGS23.1x0, data sheet PV 22.02 or see model 232.30.063, data sheet PV 22.03
- Pressure gauge with electrical output signal, see model PGT23.1x0, data sheet PV 12.04
- Version per ATEX Ex II 2 GD c TX
- DVGW conformity certificate for building services and systems engineering

Standard version

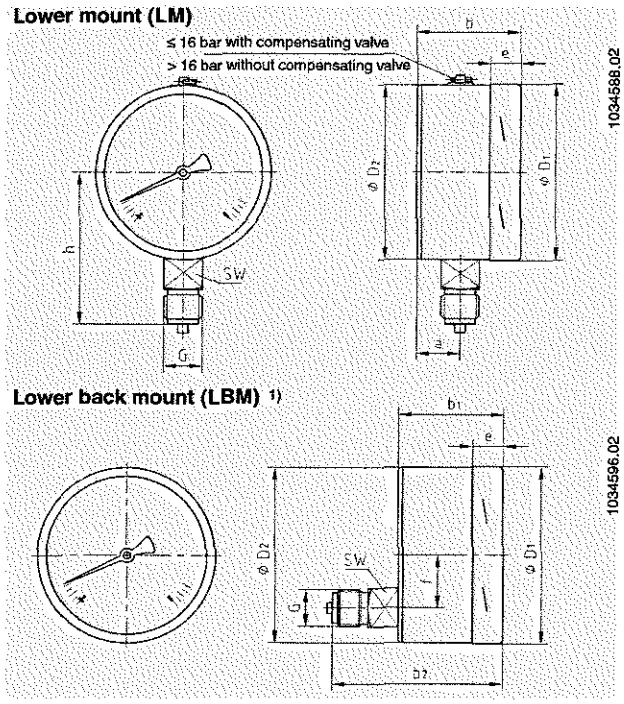

Dimensions in mm

NS	Dimensions in mm											Weight in kg	
	a	b	b_1	b_2	D_1	D_2	e	f	G	h ±1	SW	Model 232.30	Model 233.30
63	17.5	42	42	61	63	63	14.5	18.5	G ¼ B	54	14	0.20	0.26
100	25	59.5	59.5	93	101	100	17	30	G ½ B	87	22	0.65	1.08
160	27 [2]	65 [3]	-	-	161	159	17.5	-	G ½ B	118	22	1.30	2.34

Process connection per EN 837-1 / 7.3

2) With scale ranges ≥ 100 bar: 41.5 mm
3) With scale ranges ≥ 100 bar: 79 mm

Ordering information
Model / Nominal size / Scale range / Connection size / Connection location / Options

© 2003 WIKA Alexander Wiegand SE & Co. KG, all rights reserved.
The specifications given in this document represent the state of engineering at the time of publishing.
We reserve the right to make modifications to the specifications and materials.

WIKA
WIKA Alexander Wiegand SE & Co. KG
Alexander-Wiegand-Straße 30
63911 Klingenberg/Germany
Tel. (+49) 9372/132-0
Fax (+49) 9372/132-406
E-mail info@wika.de
www.wika.de

06/2012 GB

Chapter 2.6

Technical Literature - Pressure Switch

Compact pressure switch IP 65, for high pressure ranges Model PCS-HP

Applications

- Pressure monitoring and direct switching of electrical loads
- For measuring points with limited space
- For gaseous and liquid, aggressive and highly viscous or contaminated media, also in aggressive ambience
- Process industry: chemical/petro-chemical, on- and offshore, technical gases, environmental technology, machine building and general plant construction, water treatment, pharmaceutical industry

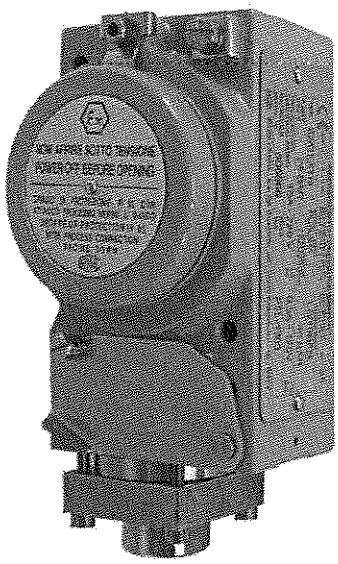

Compact pressure switch model PCS-HP

Special features

- Ingress protection IP 65, NEMA 4
- Ambient temperature -40 ... +85 °C
- 1 switch point, SPDT or DPDT with a high contact rating of up to 15 A / AC 220 V
- Setting ranges up to 600 bar, max. test pressure up to 700 bar

Description

These high-quality pressure switches have been specifically developed for safety-critical applications with limited space. High quality and product manufacturing to ISO 9001:2000 ensures reliable monitoring of your plant. In production, the switches are traced by quality assurance software at every step and subsequently are 100 % tested.
The gauge adapters are made of stainless steel, the diaphragm is, depending on the measuring range and the sensor code, made of Inconel or coated with NBR or PTFE. Each switch family is available in IP 65, Ex-ia or Ex-d versions (Ex-ia see model PCA-HP, data sheet PV 33.33).

In order to ensure as flexible operation as possible, the pressure switches are equipped with micro switches, which make it possible to switch an electrical load of up to 15 A / AC 220 V directly. For smaller contact ratings, such as for PLC applications, argon gas filled micro switches with gold-plated contacts can be selected as an option. For two separate circuits the switches are also available in the version DPDT (double change-over contact).

By using a diaphragm with an antagonist spring, the model PCS-HP pressure switch is extremely robust and guarantees optimal operating characteristics.

Data sheets showing similar products:
Compact pressure switch, ignition protection type EEx-ia; model PCS; see data sheet PV 33.30
Compact pressure switch, ignition protection type EEx-d; model PCA; see data sheet PV 33.31
Compact pressure switch, for high pressure, ignition protection type EEx-d; model PCA-HP; see data sheet PV 33.33

Part of your business

Standard version

Case
Aluminium, epoxy resin coated,
case cover with screw-type cover, due to anti-twist device secured against unauthorised intervention

Ingress protection
IP 65 per EN 60529 / IEC 529

Permissible temperature
Ambient: -40 ... +85 °C
Medium:
Sensor code P (with FPM O-ring): 0 ... +250 °C
Sensor code P (with NBR O-ring): -10 ... +110 °C
Sensor code G: -40 ... +140 °C

Process connection
Stainless steel, lower mount (LM)
¼ NPT (female)

Measuring system
Sensor code P: Piston system
Sensor code G: Diaphragm with antagonist spring

Wetted parts

Sensor code	Measuring system
P	Stainless steel 316, sealing FPM [1]
G	Hastelloy C276

1) Option with sealing NBR

Switch contacts

Code	Type	Design	Electrical rating (resistive load) [4] AC	DC
1	SPDT	**Silver contacts**	15 A, 220 V	2 A, 24 V 0.5 A, 125 V 0.25 A, 220 V
2 [3]	DPDT	**Silver contacts**	5 A, 220 V	0.5 A, 24 V
3	SPDT	**Silver contacts** inert gas filled Tamb: -30 ... +70 °C	15 A, 220 V	2 A, 24 V 0.5 A, 220 V
4 [3]	DPDT	**Silver contacts** hermetically sealed in air	5 A, 220 V	0.5 A, 24 V
5	SPDT	**Gold-plated contacts** inert gas filled Tamb: -30 ... +70 °C	1 A, 220 V	0.5 A, 24 V

3) Simultaneous triggering within 2% of span
4) Only the underlined data are shown on the product label

Repeatability
≤ 1 % of span

Setting ranges, max. test pressure, max. switch hysteresis

Sensor code	Setting range in bar	Working range in bar	Max. test pressure in bar	Max. switch hysteresis Contact code 1, 3 and 5	Contact code 2	Contact code 4
P, G	8 ... 40	0 ... 100	400	2 bar	4 bar	16 bar
P, G	16 ... 100	0 ... 250	400	5 bar	5 bar	20 bar
P, G	40 ... 250	0 ... 400	600	12 bar	20 bar	80 bar
P, G	80 ... 400	0 ... 600	600	20 bar	20 bar	80 bar
P, G	100 ... 600	0 ... 600	700	30 bar	30 bar	120 bar

Switch points
The switch points can be set to your requirements, free-of-charge.
Please specify:
Switch point, switching direction (e.g. switch point 1: 0.5 bar, falling)

After unscrewing the case cover, **switch point adjustment** can be made using the adjustment screw. The switch point is settable within the entire measuring range with **the following general rule**:

- Define the value A = 2x repeatability + switch hysteresis
- If the pressure is rising, the switch point should be set between (min. + value A) up to max. of the setting range.
- If the pressure is falling, the switch point should be set between min. up to (max. - value A) of the setting range.

Example:
Setting range: 0 ... 1 bar with one switch contact
Repeatability: 1 % of 1 bar = 10 mbar
Switch hysteresis = 15 mbar (see table setting ranges)
Value A = 2 x 10 mbar + 15 mbar = 35 mbar
If the pressure is rising, the switch point should be set between 35 mbar up to 1 bar.
If the pressure is falling, the switch point should be set between 0 up to 965 mbar.
For optimal performance we suggest the switch point lies between 25 % and 75 % of the setting range.

Electrical connection
½ NPT female, cable connection using internal terminal block, ground connection using internal and external screw, max. ground cable cross-section 4 mm2

Pressure switch certified per:

- Pressure equipment directive 97/23/EC (PED, annex 1, category IV, safety accessories, module B + D)
- Low voltage directive 73/23 EEC and 93/68 EEC

Dielectric strength
Safety class I (EN 61298-2: 1997-06)

Mounting
Direct or wall mounting
Preferred connection location of the process connection should be below. Alternatively the instrument can be installed so that access to internals is from front of the enclosure and the electrical connection is placed on side.

Weight
approx. 1.0 kg

Options

- Other process connection, also with adapter
- Case made of stainless steel 316
- Electrical connection 3/4 NPT, G 1/2 or M20 x 1.5 (female)
- Cable gland on request
- 2" pipe-mounting kit (with clamping element)
- Version for off-shore [5] or tropicalised application [5]
- Version for applications to NACE [5] [6]
- Version for ammonia applications [5]
- Oil and grease free version for oxygen applications
- Version to
  GAS Ex-ia DUST Ex-iaD Gr. II Cat. 1 GD [5]
  Electrical characteristics: Ui = 30 V
  Ii = 100 mA
  Pi = 0.75 W
  Ci = 0 µF
  Li = 0 mH
- Accessories:
  - Pressure gauge valves model 910.11, see data sheet AC 09.02
  - Barstock valves model 910.81, see data sheet AC 09.18

5) Inert gas filled contacts required
6) Only in connection with sensor code G

Approvals and certificates

- SIL 2 version [5]
- GOST-R certificate
- Test certificate *CA* (confirmation of the switching accuracy)
- Test report *CP* (3-time listing of the switch point, requires switch point specification)
- Material certificate 3.1 per EN 10204

Dimensions in mm

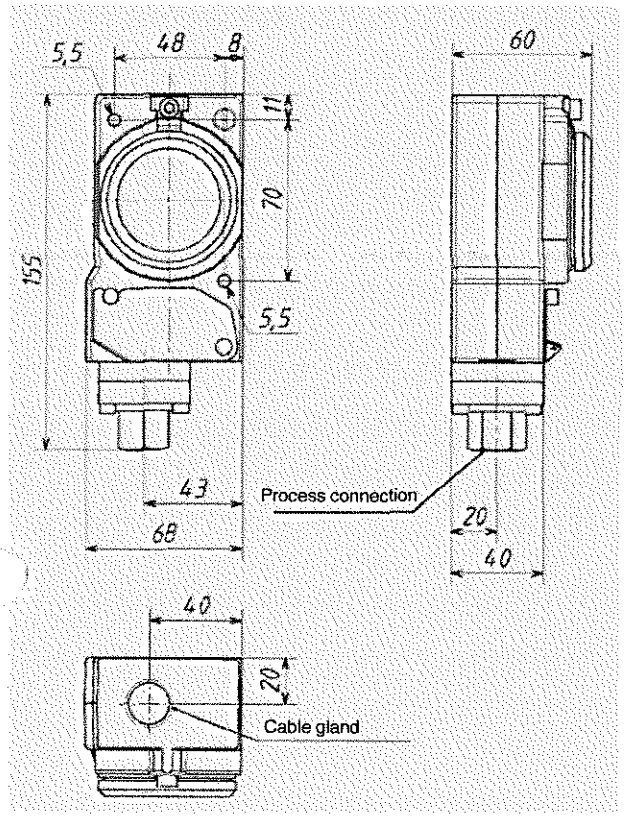

Ordering information

Model / Case / Sensor code / Switch contacts with version / Setting range / Process connection / Electrical connection / Switch point / Switching direction / Options

Example: PCS 2 P1 - 8/40 bar - 1/4"NPT-F - 1/2"NPT-F

© 2010 WIKA Alexander Wiegand SE & Co. KG, all rights reserved.
The specifications given in this document represent the state of engineering at the time of publishing.
We reserve the right to make modifications to the specifications and materials.

WIKA Alexander Wiegand SE & Co. KG
Alexander-Wiegand-Straße 30
63911 Klingenberg/Germany
Tel. (+49) 9372/132-0
Fax (+49) 9372/132-406
E-mail info@wika.de
www.wika.de

11/2010 GB

Chapter 2.7

Technical Literature - Chlorine Analyzer

HACH LANGE

UNITED FOR WATER QUALITY

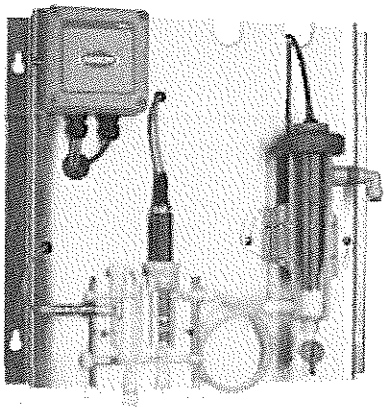

CLF10 sc: Free reagentless chlorine sensor

CLF10 sc Free chlorine analyser, pHD sensor, metric

Order number: LXV45A.98.23022

Free chlorine sensor with pHD differential sensor (on panel)

- Disinfection under control
- Minimal operation costs
- Plug and play
- Real-time process control
- EPA compliant according to Method 334.0

The Free Chlorine Analyser measures free chlorine continuously for real time process control. It is based on amperometric technology and is fully compatible with digital SC controllers. The analyser can be used in most municipal and industrial applications, and is best utilised where waste stream management is a constraint. The self diagnostics alerts you when the process has changed or the instument needs servicing. Diagnostic features include the CAL WATCH algorithm for warning of pH and chlorine calibration deviation and a non-contacting sample flow sensor for notification of insufficient sample flow. All warnings are easy to configure.

Technical Specifications

Accuracy	Free Chlorine: ± 10 % 10 % of the reference test** (DPD) at stable pH less than 8.5 (±0.5 pH unit from the pH at calibration)
Accuracy	Free Chlorine: ± 3 % 3 % of the reference test** (DPD) at constant pH less than 7.2 (±0.2 pH unit)
Accuracy	Total Chlorine: ± 20 % of the reference test* (DPD) at stable pH 20 % greater than 8.5
Accuracy	Total Chlorine: ± 10 % 10 % of the reference test** (DPD) at stable pH less than 8.5 (±0.5 pH unit from the pH at calibration)
Calibration method	1-point or 2-point (zero and slope) calibration
Certifications	CE/ETL, EMC
Connection	1/4 in OD
Connection	1/2 in ID

Controller compatibility	SC controller platforms
Diameter	Sensor: 25 mm
Dimensions Metric (H x W X D)	482.6 mm x 495 mm x 483 mm
Fitting	Metric
Flow rate	30 - 50 L/hour (7.9 to 13.2 gal/hour),Optimal is 40 L/hour (10.5 gal/hour)
Interferences	Free Chlorine: Monochloramine, chlorine dioxide, ozone, and chalk deposits. Total Chlorine: Chlorine dioxide, ozone and chalk deposits
Length	Sensor: 195 mm
Material	Panel: Corrosion-resistant, fully-submersible (stainless steel, PVC, silicon rubber and polycarbonate)
Measurement method	Reagentless, electrochemical, three-electrode amperometric system
Measuring range	0 - 10 ppm
Mounting style	Flat, vertical surface
Operating temperature range	0 - 45 °C
Parameter	Free Chlorine
Power requirements (Voltage)	None
Pressure range	0.5 bar, no pressure impulses and/or vibrations
Repeatability	30 30 ppb ppb or 3%, whichever is greater
Resolution	0.001 0.001 (1 ppb)
Response time	Free Chlorine: 140 140 seconds or less for 90% change (T90) at a stable temperature and pH
Sample temperature	5 - 45 °C (41 to 113 °F), compensated for fluctuations
Sampling time	Continuous
Temperature compensation	Internal temperature compensation in the sensor Temperature compensation provided by internal temperature sensor
Weight	5.5 kg
Width	495.3 mm
Width	19.5 in
pH Range	4 - 9

Subject to change without notice.

www.hach-lange.com

HACH LANGE LTD
Pacific Way
Salford
GB-Manchester, M50 1DL
Tel. +44 (0)161 8721487
Fax +44 (0)161 8487324
info@hach-lange.co.uk
www.hach-lange.co.uk

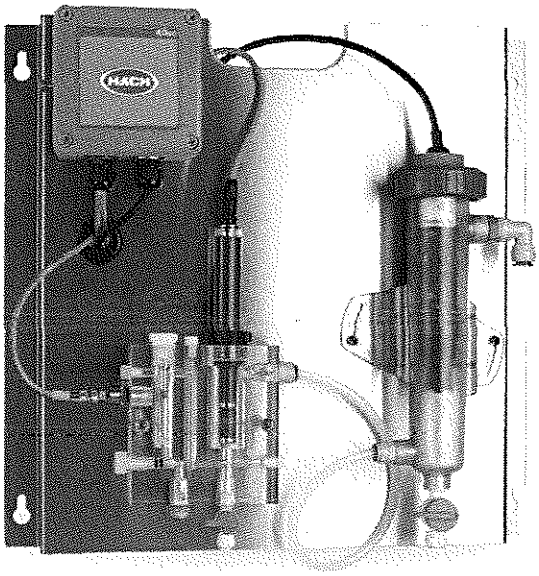

Applications

- Drinking water: ground water, sea water (desalination), distribution network and surface water
- Process water: boiler and cooling systems, food and beverage
- Waste and reused water

CLT10 sc / CLF10 sc: Total and free reagentless chlorine sensors

Disinfection under control
HACH LANGE's self diagnostics alerts you when the process has changed or the instument needs servicing. Diagnostic features include the CAL WATCH algorithm for warning of pH and chlorine calibration deviation and a non-contacting sample flow sensor for notification of insufficient sample flow. All warnings are easy to configure. CAL WATCH is unique in the market.

Minimal operation costs
The amperometric sensors monitor chlorine concentration continuously without reagents. There is no need neither to replace reagents nor to manage disposal. This saves time and keeps operation costs at a low level.

Plug and play
The sensors are designed for all HACH LANGE digital SC controllers so you only need to know one controller for all measurements. They are easy to operate, no matter if measuring turbidity or chlorine. HACH LANGE SC controllers have no complicated wiring or setup procedures. Simply plug in any HACH LANGE digital sensor and it's ready to use without software configuration.

Real-time process control
Continuous readings indicate when treatment conditions have changed allowing CLT10 sc and CLF10 sc a real-time control of disinfection processes.

EPA compliant according to Method 334.0
In accordance with the US EPA Method 334.0, the sensors can be used for reporting chlorine residual measurements.

Extended up-time via various service options
The HACH LANGE ISO certified service is available close to you. It offers a range from one-off installation service to warranty extension up to 5 years. Thus, the lifetime of the system is increased and costs become transparent and foreseeable.

Complete solutions for disinfection analysis
HACH LANGE is a recognised expert in disinfection with a unique product spectrum. The CLT10 sc and CLF10 sc amperometric sensors complement online chemical analysis solutions and the amperometric and chemical laboratory solutions.

CLT10 sc / CLF10 sc: Total and free reagentless chlorine sensors

Technical data

Chlorine sensor

Measurement range
0 to 10 ppm

Lower limit of detection (LOD)
30 ppb (0.03 ppm) or lower

Limit of quantitation (LOQ)
90 ppb (0.09 ppm) or lower

Resolution
0.001 ppm (1 ppb)

Accuracy
Free chlorine: ± 3 % of the reference test* (DPD) at constant pH less than 7.2 (± 0.2 pH unit)
Free chlorine: ± 10 % of the reference test* (DPD) at stable pH less than 8.5 (± 0.5 pH unit from the pH at calibration)

Total chlorine: ± 10 % of the reference test* (DPD) at stable pH less than 8.5 (± 0.5 pH unit from the pH at calibration)
Total chlorine: ± 20 % of the reference test* (DPD) at stable pH greater than 8.5

Repeatability
30 ppb or 3 %, whichever is greater

Response times
140 seconds or less for 90 % change (T90) at a stable temperature and pH

Total chlorine: 100 seconds or less for 90 % change (T90) at a stable temperature and pH

Sampling time
Continuous

Interferences
Free chlorine: monochloramine, chlorine dioxide, ozone, and chalk deposits.

Total chlorine: chlorine dioxide, ozone and chalk deposits

Pressure limit
0.5 bar, no pressure impulses and/or vibrations

Sample flow rate
30 to 50 L/hour, optimal is 40 L/hour

pH range of sample
pH 4 to 9

Sample temperature (compensated for fluctuations)
5 to 45 °C

* Reference measurement must be conducted at the sensor sampling point.

Temperature compensation
Internal temperature compensation in the sensor

Storage temperature
0 to 50 °C dry, without electrolyte
15 to 25 °C with electrolyte

Dimensions (D x L)
25 mm x 482.6 mm

Measurement method
Reagentless, electrochemical, three-electrode amperometric system

Calibration methods
1-point or 2-point (zero and slope) calibration

Material
Corrosion-resistant, fully-submersible (stainless steel, PVC, silicon rubber and polycarbonate)

Warranty
1 year on the electrode body

Panel (including SS panel, gateway, chlorine sensor flow cell, pH sensor flow cell)

Operating temperature
0 to 50 °C

Power requirements
12 V DC, 30 mA maximum (supplied by sc controller)

Connections
6 mm OD
(pH Flow Cell Outlet): 12 mm OD

Panel dimensions
495.3 mm x 482.6 mm x 151.2 mm

Weight
Approximately 5.5 kg (panel and empty panel-mounted components only)

Controller platform
SC controller

Waterproof rating
IP65 (NEMA 4X)

Certification
CE / ETL, EMC

Subject to change without notice.

CLT10 sc / CLF10 sc: Total and free reagentless chlorine sensors

Principle of operation

Amperometry is an electrochemical technique that measures the change in current resulting from chemical reactions taking place on the electrodes. The generated current is proportional to the analyte concentration.
A typical amperometric sensor consists of two dissimilar electrodes; an anode and a cathode (i.e. silver/platinum or copper/gold, respectively).

Typically, the electrodes are covered with a membrane cap containing electrolyte, providing for better selectivity of the analysis. Additionally, a small constant electrical voltage is applied across the electrodes.

On the right hand side is a general schematic of the reduction oxidation reaction taking place in a simple 2-electrode amperometric system:

Cathode (working electrode):
$HOCl + H^+ + 2e^- \rightarrow Cl^- + H_2O$
(reduction of hypochlorous acid)

Anode (reference electrode):
$Cl^- + Metal \rightarrow Metal\text{-}Cl + e^-$
(oxidation of the anodic material)

In a three electrode amperometric system, such as used in the CLT10 sc and CLF10 sc, the anode is essentially split into two parts; a reference and an auxiliary (or counter) electrode. These systems are always supported by special electrical circuit directing the voltage between all electrodes. The three electrode design generally makes the measurements more stable and provides longer life for the working and reference electrodes.

Dimensions

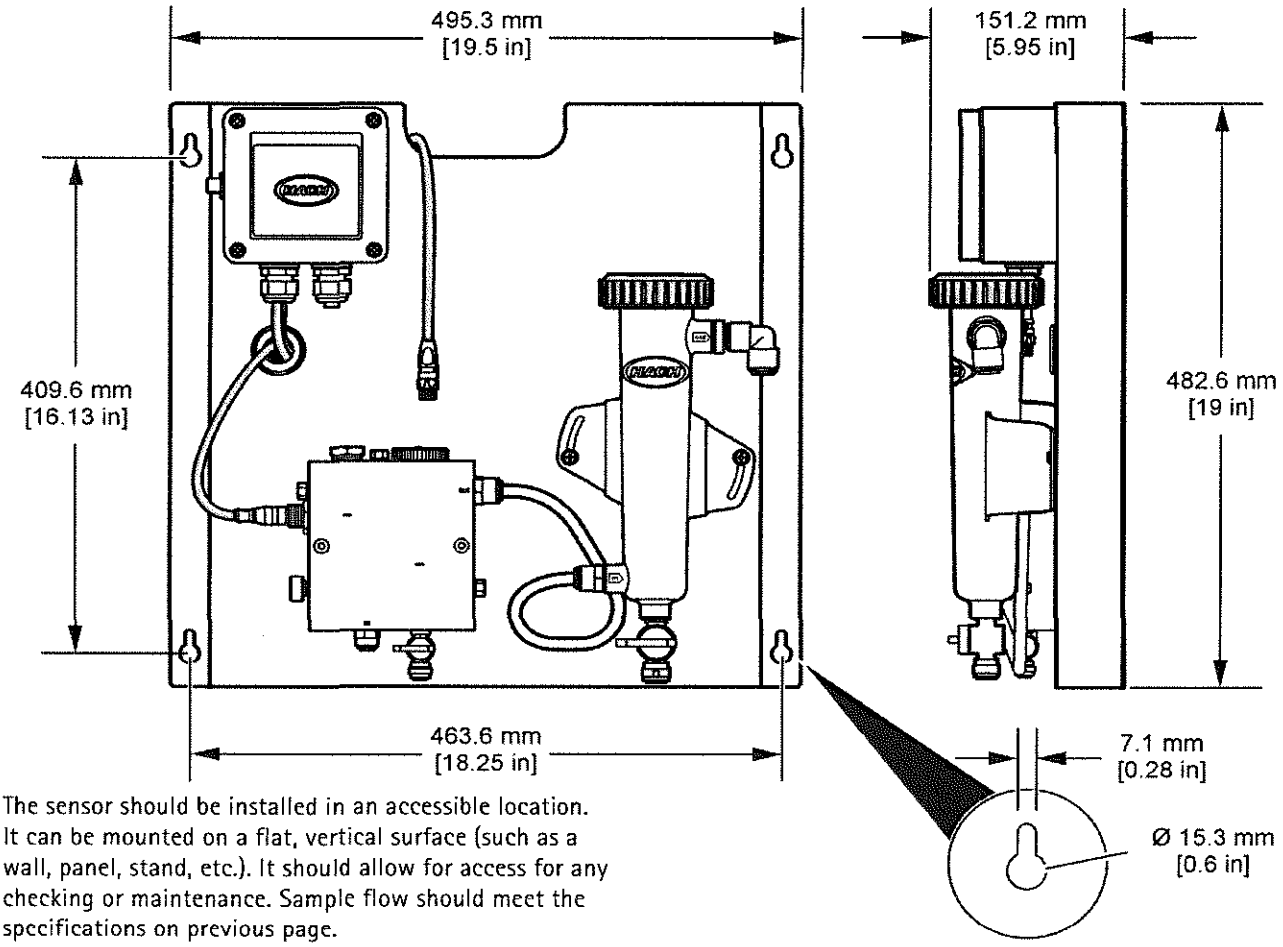

The sensor should be installed in an accessible location. It can be mounted on a flat, vertical surface (such as a wall, panel, stand, etc.). It should allow for access for any checking or maintenance. Sample flow should meet the specifications on previous page.

CLT10 sc / CLF10 sc: Total and free reagentless chlorine sensors

Order information and accessories

CLT10 sc total chlorine sensors

Article number	Product name	Product description
LXV45B.98.23022	CLT10 sc	Total chlorine sensor with pHD differential sensor (on panel)
LXV45B.98.22022	CLT10 sc	Total chlorine sensor with pH combination sensor (on panel)
LXV45B.98.21022	CLT10 sc	Total chlorine sensor with grab sample (on panel)

CLF10 sc free chlorine sensors

Article number	Product name	Product description
LXV45A.98.23022	CLF10 sc	Free chlorine sensor with pHD differential sensor (on panel)
LXV45A.98.22022	CLF10 sc	Free chlorine sensor with pH combination sensor analogue (on panel)
LXV45A.98.21022	CLF10 sc	Free chlorine sensor with grab sample (on panel)

Controllers

Article number	Product name	Product description
LXV401.99.XXXX1	SC 100	Digital dual-channel controller
LXV402.99.XXXX1	SC 1000	Digital multi-channel controller, display module
LXV400.99.XXXX1	SC 1000	Digital multi-channel controller, probe module

Accessories

Article number	Product description
LZY051	Acidification/cleaning unit for amperometric sc sensors
9159900	Sample conditioning kit, with two pressure regulators
9181505	phD differential analogue pH sensor, Ryton
9181605	pH combination sensor, analogue, Ryton

Service options

Article number	Product description
TSE-COM-CL-10	Commisioning CLF10 sc / CLT10 sc sensor
TSE-MC-CL-10	One-off Service CLF10 sc / CLT10 sc
TSE-BC-CL-10	Basic Contract CLF10 sc / CLT10 sc
TSE-CC-CL-10	Extended Warranty Contract CLF10 sc / CLT10 sc

HACH LANGE has the broadest range of disinfection monitoring systems:

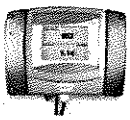

SC 1000 Controller (see above):
Up to eight out of 40 + different sensors covering 14 parameters can be connected to one controller. SC 1000 controllers can also be networked together, handling a maximum of 24 sensors at the same time. The multi talent with graphic and touch display for process management and communication.

CL17 chlorine analyser
(5440001 free chlorine / 5440002 total chlorine):
The CL17 is the market leader in chlorine analysis suitable for online chemical analysis solutions.

Pocket Colorimeter II (5953000V.02):
The colorimeter for chlorine analysis covers chemical laboratory applications and is suitable for DPD and Method 334.0.

For more information please visit our website!

DOC053.52.35006.May10

HACH LANGE LTD
Pacific Way
Salford
GB-Manchester, M50 1DL
Tel. +44 (0)161 8721487
Fax +44 (0)161 8487324
info@hach-lange.co.uk
www.hach-lange.co.uk

Phone: (0161) 872 14 87

HACH LANGE

UNITED FOR WATER QUALITY

DOC023.52.80034

CL17 Chlorine Analyzer

USER MANUAL

02/2014, Edition 9

© Hach Company, 2000, 2001, 2004, 2008, 2009-2011, 2013, 2014. All rights reserved.

Printed in the U.S.A./Germany

Table of Contents

Section 1 Specifications ... 3

Section 2 General information ... 5
- 2.1 Safety information ... 5
  - 2.1.1 Use of hazard information ... 5
  - 2.1.2 Precautionary labels ... 5
- 2.2 General product information ... 6
  - 2.2.1 Instrument description ... 6
  - 2.2.2 Method of analysis ... 7
  - 2.2.3 Theory of operation ... 8

Section 3 Installation ... 9
- 3.1 Unpack the instrument ... 9
- 3.2 Instrument environmental considerations ... 9
- 3.3 Mount the instrument on the wall ... 9
- 3.4 Plumbing connections ... 12
- 3.5 Installing the sample line ... 13
- 3.6 Sample conditioning ... 14
  - 3.6.1 Assemble the sample conditioning kit ... 14
  - 3.6.2 Use the sample conditioning kit ... 15
- 3.7 Optional air purge ... 18
- 3.8 Electrical connections ... 18
  - 3.8.1 Power connections ... 19
  - 3.8.2 Wiring the instrument ... 20
  - 3.8.3 Voltage selection for alternate voltage operation ... 21
  - 3.8.4 Alarm connections ... 22
  - 3.8.5 Recorder output connections ... 23
- 3.9 Install the pump/valve pinch plate ... 24

Section 4 System Startup ... 27
- 4.1 Install the reagents ... 27
- 4.2 Install the stir bar ... 28
- 4.3 Supply the sample ... 29
- 4.4 Supply power to the analyzer ... 29

Section 5 Operation ... 31
- 5.1 Keypad and display information ... 31
- 5.2 Instrument menu structure ... 32
  - 5.2.1 Setup menu ... 32
  - 5.2.2 Alarm setup ... 33
  - 5.2.3 Set the recorder output span ... 34
    - 5.2.3.1 Change to 0 to 20 mA output range ... 35
  - 5.2.4 Maintenance menus ... 35
- 5.3 Calibration ... 36
  - 5.3.1 Calibration on known standards ... 36
  - 5.3.2 Calibration by comparison ... 37

Section 6 Maintenance ... 39
- 6.1 Scheduled maintenance ... 39
  - 6.1.1 Replenish the reagents ... 39
  - 6.1.2 Replace the pump tubing ... 39
  - 6.1.3 Replace the analyzer tubing ... 40
- 6.2 Unscheduled maintenance ... 41
  - 6.2.1 Fuse replacement ... 41
  - 6.2.2 Clean the instrument enclosure ... 42
  - 6.2.3 Clean the colorimeter ... 42

6.2.4 Replace the sample conditioning filter 44
6.2.5 Reagent spill clean up 44

Section 7 Troubleshooting 45
7.1 Troubleshooting guide 45
7.2 System alarms 46
7.3 System warnings 47

Section 8 Parts and accessories 49

Section 9 Contact information 51

Section 10 Certification 53
10.1 FCC PART 15, Class "A" Limits 53

Appendix A Network Interface Card 55
A.1 Attach the analyzer to the network using an AquaTrend interface 55
A.2 Adding the measurement to a channel 56
A.3 Alarms and warnings 56
A.4 Logging data using the serial input/output module 56
A.5 Manually polling data 57
A.6 Using the signal output module 57
A.7 Logging data using the MOD I/O module 57

Section 1 Specifications

Specifications are subject to change without notice.

General	
Display	LCD, 3½-digit measurement readout and six-character alphanumeric scrolling text line.
Enclosure	IP62-rated with the gasketed door latched
Instrument description	31.4 cm (W) x 45.4 cm (H) x 17.9 (D) (12.4 x 17.88 x 7.06 in.)
Mounting	Wall mount
Instrument shipping weight	10.49 kg (23 lb)
Warranty	Hach Company warrants its products to the original purchaser against any defects that are due to faulty material or workmanship for a period of one year from the date of shipment unless otherwise noted in the product manual.
Certification	CE approved. Listed to UL and CSA safety standards by ETL.
Sample Requirements	
Sample flow rate to sample conditioning	200 to 500 mL/min
Inlet pressure to instrument	**1 to 5 psig**; 1.5 psig is optimum. Exceeding 5 psig can cause sample tubing failure unless sample conditioning is used.
Inlet pressure to sampling conditioning	1.5 to 75 psig (with sample tube level with the bottom of the instrument—see Figure 7 on page 16.)
Sample temperature range	5 to 40 °C (41 to 104 °F)
Inlet fitting at instrument	¼-inch OD polyethylene tubing with quick-disconnect fitting
Drain fitting	½-inch hose barb
Sample conditioning	Use provided sample conditioning
Regent/Standard Requirements	
Maximum reagent usage	One-half liter per month (each of the two reagents)
Reagent containers	High-density polyethylene (2) ½-liter bottles
Reagent containment	Reagent bottles are contained inside the analyzer enclosure and are vented externally.
Electrical	
Power requirements	100–115/230 VAC (selection switch inside instrument); 90 VA, 50/60 Hz, 2.5 Amp fuse
Power connection	Connection made by three wire barrier terminal block through a ½-inch conduit hole in the case. Wire range: 18 AWG.
Installation category	II
Polution degree	2
Protection class	I
Alarm relay outputs	Two unpowered SPDT relays each rated at 5 A resistive, 240 V ac maximum. Can function as sample set point alarms (high or low) or as a system warning indicator or a system alarm indicator. Use either high voltage (greater than 30 V RMS and 42.2 V PEAK or 60 V dc) or low voltage (less than 30 V RMS and 42.2 V PEAK or 60 V dc). Do not use a combination of high and low voltage.
Alarm connection	Connection made by a removable three wire plug through a ½-inch conduit hole in the case. Wire range: 12–18 AWG.
Recorder output	One isolated recorder output, 4–20 mA (can be adjusted to 0–20 mA). Recommended load impedance 3.6 to 500 ohms
Recorder output connections	Connection made by a removable three wire plug through a ½-inch conduit hole in the case. Wire range: 12–22 AWG.

Specifications

Optical	
Light source	Class 1 LED (light emitting diode) with a peak wavelength of 520 nm; 50,000 hours estimated minimum life
Performance	
Operating range	0–5 mg/L free or residual chlorine
Accuracy	±5% or ±0.03 ppm whichever is greater
Precision	±5% or ±0.01 ppm whichever is greater
Quantitation limit	0.09 ppm
Cycle time	2.5 minutes
Detection limit	0.03 ppm
Calibration	Uses default calibration curve
Power switch	User accessible power switch is required
Recorder	One 4-20 mA/0–20 mA
Alarm relay outputs	Two SPDT relays, 5A resistive load at 240 V ac. Can function as sample set point alarms (high or low) or as a system warning indicator or a system alarm indicator.
Optional external outputs	Hach AquaTrend® Network Interface
Environmental	
Storage temperature range	-40 to 60 °C (-40 to 140 °F)
Operating temperature range	5 to 40 °C (41 to 104 °F)
Humidity	90% at 40 °C (90% at 104 °F)
Air purge (optional)	0.1 CFM instrument quality air at 20 psig maximum, ¼-inch OD tubing
Altitude	2000 m (6561 ft)

Section 2 General information

The information in this manual has been carefully checked and is believed to be accurate. However, the manufacturer assumes no responsibility for any inaccuracies that may be contained in this manual. In no event will the manufacturer be liable for direct, indirect, special, incidental or consequential damages resulting from any defect or omission in this manual, even if advised of the possibility of such damages. In the interest of continued product development, the manufacturer reserves the right to make improvements in this manual and the products it describes at any time, without notice or obligation.

Revised editions are found on the manufacturer's website.

2.1 Safety information

Please read this entire manual before unpacking, setting up or operating this equipment. Pay attention to all danger, warning and caution statements. Failure to do so could result in serious injury to the operator or damage to the equipment.

Make sure that the protection provided by this equipment is not impaired, do not use or install this equipment in any manner other than that specified in this manual.

2.1.1 Use of hazard information

DANGER
Indicates a potentially or imminently hazardous situation which, if not avoided, will result in death or serious injury.

WARNING
Indicates a potentially or imminently hazardous situation which, if not avoided, could result in death or serious injury.

CAUTION
Indicates a potentially hazardous situation that may result in minor or moderate injury.

Notice: *Indicates a situation that is not related to personal injury.*

Important Note: *Indicates a situation which, if not avoided, may cause damage to the instrument. Information that requires special emphasis.*

Note: *Information that supplements points in the main text.*

2.1.2 Precautionary labels

Read all labels and tags attached to the instrument. Personal injury or damage to the instrument could occur if not observed.

	Electrical equipment marked with this symbol may not be disposed of in European public disposal systems after 12 August of 2005. In conformity with European local and national regulations (EU Directive 2002/96/EC), European electrical equipment users must now return old or end-of life equipment to the Producer for disposal at no charge to the user. ***Note:*** *For return for recycling, please contact the equipment producer or supplier for instructions on how to return end-of-life equipment, producer-supplied electrical accessories, and all auxiliary items for proper disposal.*
	This is the safety alert symbol. Obey all safety messages that follow this symbol to avoid potential injury. If on the instrument, refer to the instruction manual for operation or safety information.
	This symbol indicates the need for protective eye wear.

2.2 General product information

2.2.1 Instrument description

DANGER
Chemical or biological hazards. If this instrument is used to monitor a treatment process and/or chemical feed system for which there are regulatory limits and monitoring requirements related to public health, public safety, food or beverage manufacture or processing, it is the responsibility of the user of this instrument to know and abide by any applicable regulation and to have sufficient and appropriate mechanisms in place for compliance with applicable regulations in the event of malfunction of the instrument.

The Hach CL17 Chlorine Analyzer (Figure 1) is a microprocessor-controlled, process analyzer designed to monitor a sample stream continuously for chlorine content. Either free or total chlorine, in the range of 0 to 5 mg/L, can be monitored. The buffer and indicator solutions used determine the choice for free or total chlorine analysis.

CAUTION
Fire hazard. This analyzer is intended to be used for aqueous samples only.

The CL17 Chlorine Analyzer enclosure is environmentally rated for IP62 per IEC 529. The enclosure is dust-tight, and drip-resistant but is not designed for outdoor use.

The instrument uses a DPD Colorimetric Method which includes a N,N-Diethyl-p-phenylenediamine (DPD) indicator and a buffer. The indicator and buffer are introduced into the sample, causing a red color to form with an intensity proportional to the chlorine concentration. Chlorine concentration, measured photometrically, is displayed on the front panel, three-digit, LCD readout in mg/L Cl_2.

A recorder output (4-20 mA) is available. Recorder span minimum and maximum values in mg/L Cl_2 are programmed by the operator at the analyzer keyboard.

Programmable alarm circuits provide relay closures, both normally open and normally closed, for two selectable chlorine level set points. Set points can be programmed by the operator anywhere within the overall range. System warning and system alarm features provide automatic, self-testing diagnostics that detect a number of possible malfunctions, and provide alarm relay closures indicating a need for operator attention.

The CL17 analyzer can be purchased with a Hach Network Interface Card which allows the CL17 to display its readings on an AquaTrend® display or allows data to be sent to a PC via a Serial Interface Module.

Indicator and buffer reagents (473 mL of each) are placed in the instrument case in the original factory-filled bottles. Reagents are replenished once a month.

The instrument is designed so electronic components are isolated from the hydraulic components. Windows allow the operator to observe the display indicators and reagent supply without opening the instrument enclosure.

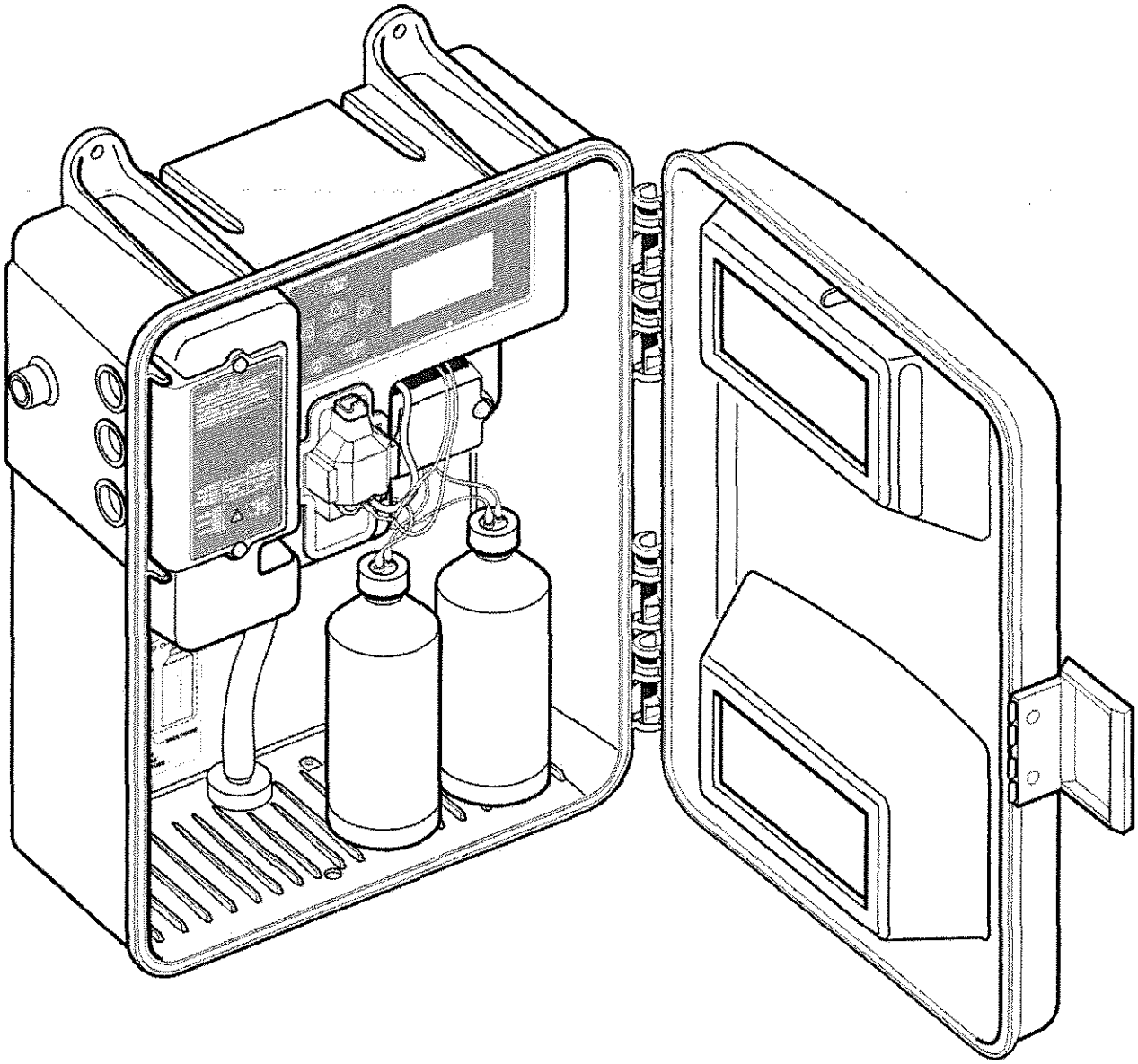

Figure 1 Chlorine analyzer

2.2.2 Method of analysis

Free available chlorine (hypochlorous acid and hypochlorite ions) oxidizes the DPD indicator reagent at a pH between 6.3 and 6.6 to form a magenta-colored compound. The depth or intensity of the resulting color is proportional to the concentration of chlorine in the sample. A buffer solution specifically for free chlorine maintains the proper pH.

Total available chlorine (free available chlorine plus combined chloramines) is determined by adding potassium iodide to the reaction. Chloramines in the sample oxidize iodide to iodine, which, along with any free available chlorine, oxidizes DPD indicator to form the magenta color at a pH of 5.1. A different buffer solution containing potassium iodide maintains reaction pH. After the chemical reaction is complete, the optical absorbance at 510 nm is compared to the absorbance measured through the sample before the reagents were added. Chlorine concentration is calculated from the difference in absorbance.

2.2.3 Theory of operation

The analyzer is designed to capture and analyze a portion of the sample every 2.5 minutes. The sample portion is captured in the colorimeter measuring cell where the blank absorbance is measured. Measurement of sample blank absorbance allows compensation for any turbidity or natural color in the sample, and provides an automatic zero reference point. Reagents are added at this point to develop the magenta color, which is measured and compared to the reference.

A linear peristaltic pump/valve module controls the flow of incoming sample and injects metered volumes of the buffer and indicator reagents in a 2.5 minute cycle. The pump/valve module uses a motor-driven cam to operate pinch blocks that squeeze special thick-walled tubing against a fixed plate. The cycle operates as follows:

1. The sample inlet line is opened, allowing sample under pressure to flush sample tubing and the colorimeter sample cell where the measurement is made.
2. The sample inlet line is closed, leaving fresh sample in the cell. Cell volume is controlled by an overflow weir.
3. As the sample inlet line closes, reagent lines open, allowing buffer and indicator solutions to fill tubing in pump/valve module.
4. A measurement of untreated sample is taken to determine an average reference measurement prior to reagent addition.
5. The reagent outlet block opens, allowing buffer and indicator to blend and enter the colorimeter cell to mix with the sample.
6. After a delay for the development of color, a measurement of treated sample is taken to determine the chlorine concentration.

This sequence is repeated every 2.5 minutes.

Section 3 Installation

DANGER
Electrocution and fire hazard. Only qualified personnel should conduct the tasks described in this section of the manual.

3.1 Unpack the instrument

Remove the analyzer from its shipping carton and inspect it for any damage. Verify that the Installation Kit, Cat. No. 5516400, and Maintenance Kit, Cat. No. 5444300, are included aloing with the reagents.

If any items are missing or damaged, contact the manufacturer or distrubutor (outside the US).

3.2 Instrument environmental considerations

The instrument enclosure is designed for general-duty, indoor installation with a nearly constant ambient temperature between 5° and 40 °C (18° to 104 °F). The enclosure environmental rating is IP62 with the door closed and latched. Do not mount the instrument in direct sunlight; shield from dripping water.

3.3 Mount the instrument on the wall

The instrument case is designed for wall mounting. Refer to Figure 2, Figure 3, and Figure 4 for dimensions and other installation information. Use ¼-inch screws for mounting. Mount the instrument as close to the sampling point as practical to ensure complete purging of the sample line during each cycle. Leave adequate clearance at the sides and bottom of the instrument case for plumbing and wiring connections.

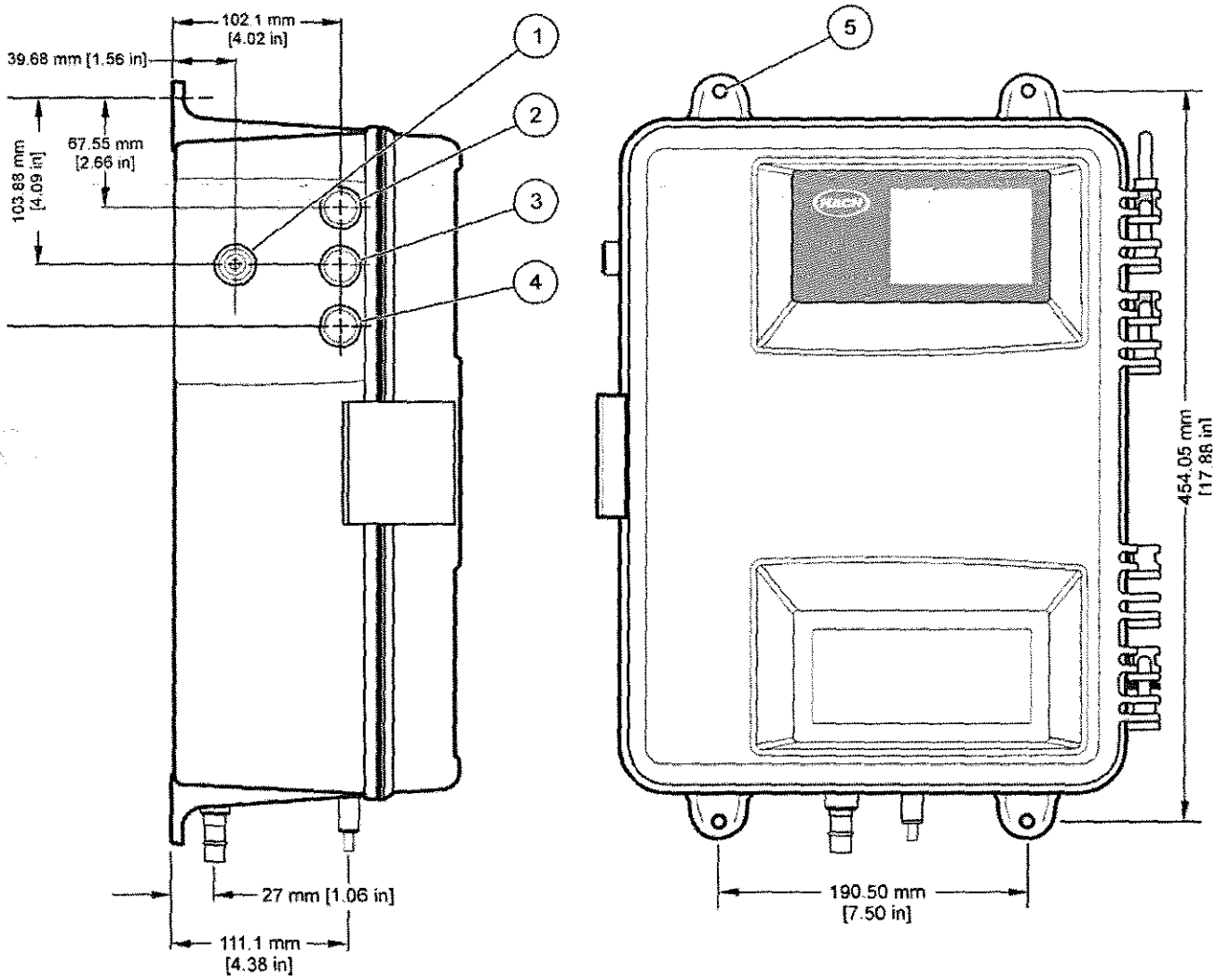

Figure 2 CL17 instrument dimensions (1 of 3)

1	Air purge quick connect .25 O.D. Polyethylene Tubing, (4743800)	4	Power connections
2	Relay / alarm contact connections	5	4 x ¼" recommended mounting bolt
3	Network and 4-20 mA connections		

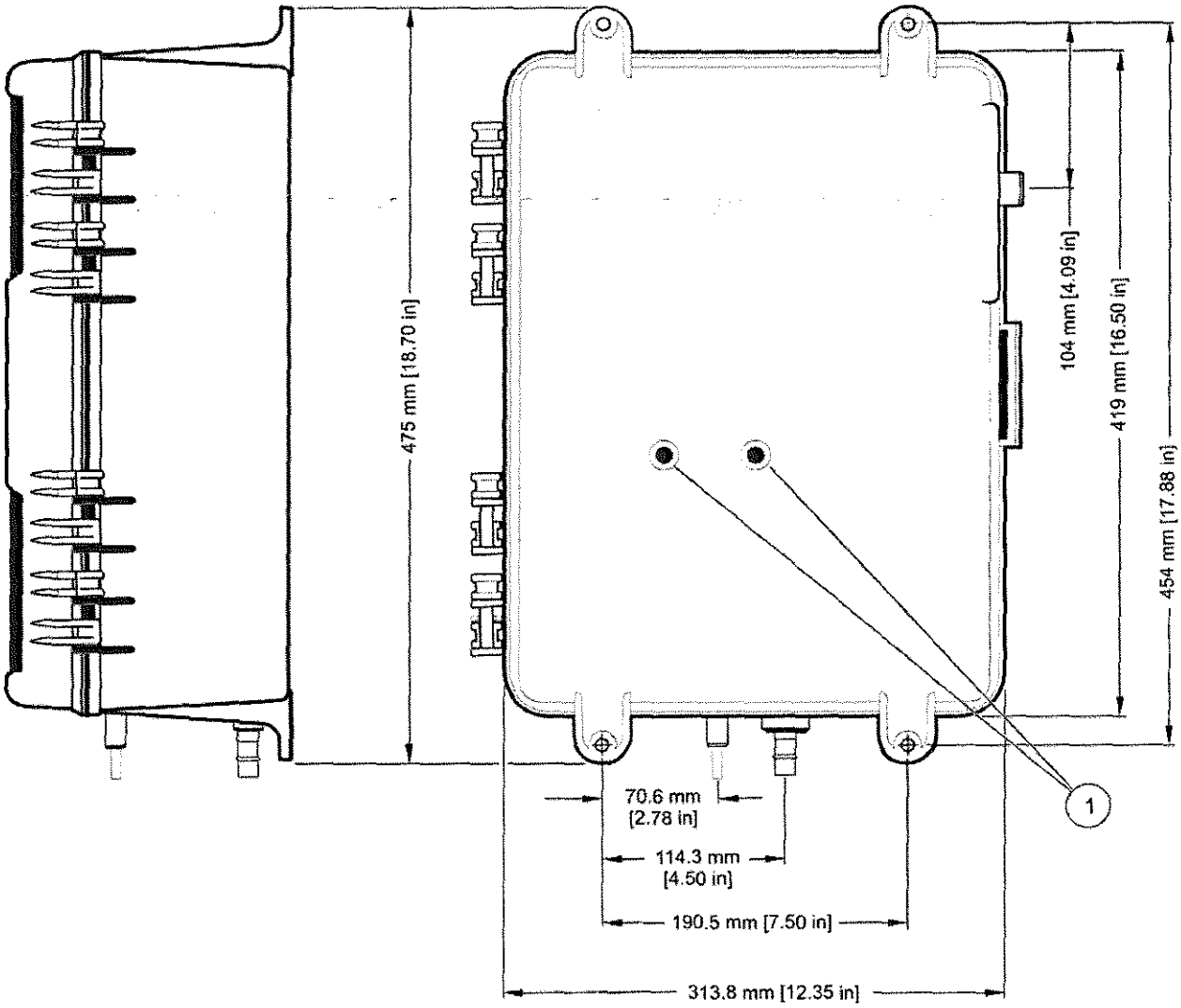

Figure 3 CL17 instrument dimensions (2 of 3)

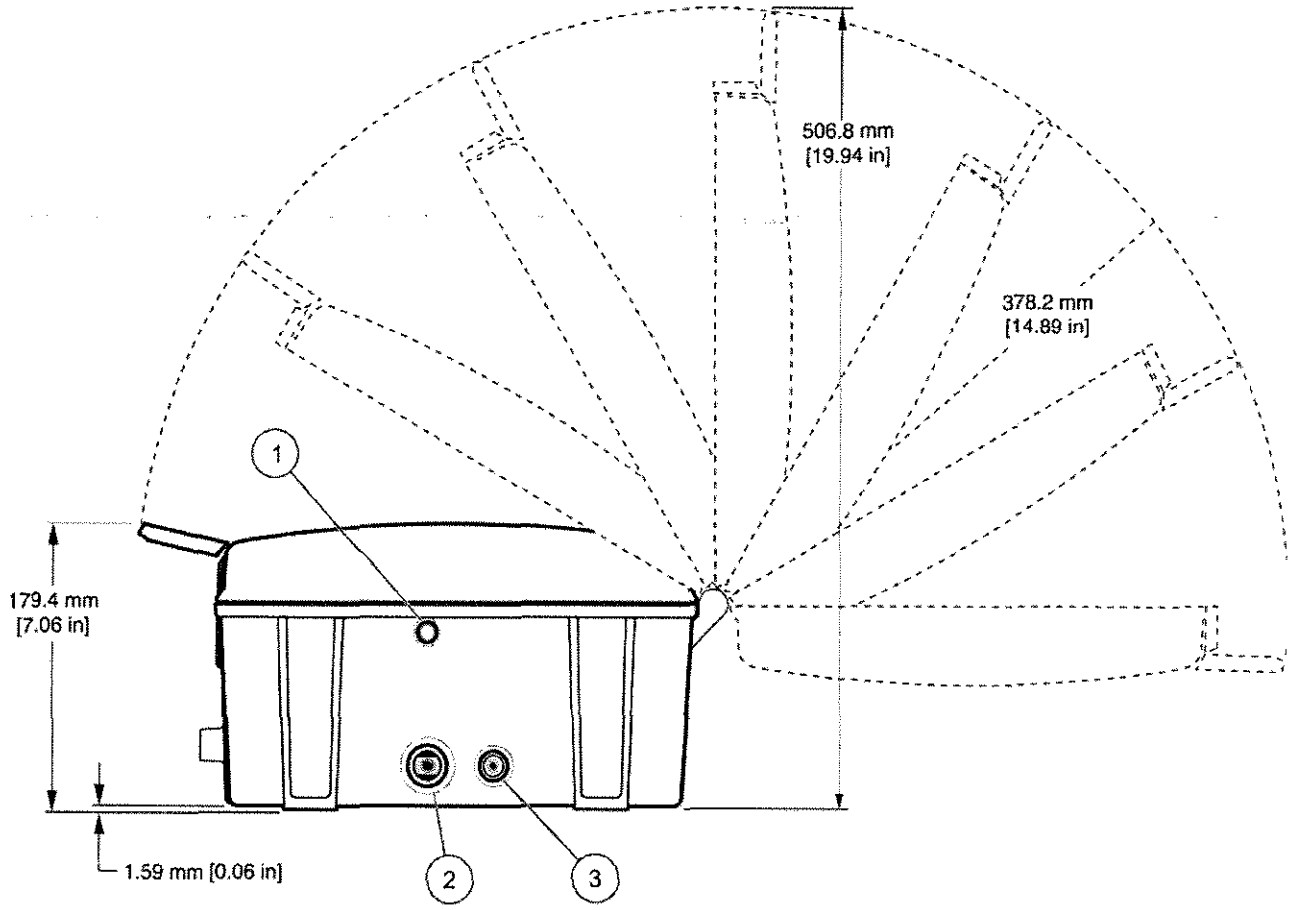

Figure 4 CL17 instrument dimensions (3 of 3)

1	Overflow drain, recommended .50 I.D. tubing	3	Sample inlet quick connect .25 O.D. Polyethylene tubing (4743800)
2	.50 I.D. drain tube sample		

3.4 Plumbing connections

Note: *The sample drain contains analysis wastes, which include both sample and chemical reagents. The enclosure drain produces no waste under normal use. However, in the event of spills or leaks, some waste may be produced. Although the chemicals used are of low concentration, it is best to check with local authorities concerning proper disposal of waste from this product.*

Sample inlet and drain connections are made on the bottom of the instrument using a quick connect fitting for ¼-inch OD tubing. Refer to Figure 5. Connect the ¼-inch O.D. poly tubing by pushing it into the fitting. Two distinct "stops" will be felt as the tubing is correctly attached. If the tubing is not properly seated, it will come loose when water pressure is applied. The sample drain fitting is sized for ½-inch ID flexible tubing (not supplied).

CAUTION
Fire hazard. This analyzer is intended to be used for water samples only.

Note: *The ½-inch enclosure drain must have at least 3 feet of tubing installed to ensure the analyzer remains dust-tight. Never plug the drain. The drain must remain open to remove sample water in the event of a leak.*

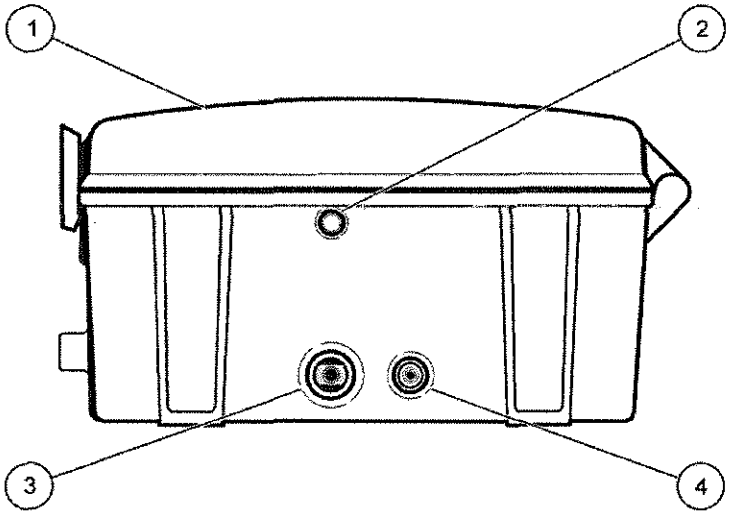

Figure 5 Plumbing connections (bottom view)

1	Front of instrument	**3**	Sample drain. Instrument drain fitting is sized for ½ in. ID flexible tubing
2	Enclosure drain	**4**	Sample inlet. Quick connect fitting for ¼ in. O.D. tubing

3.5 Installing the sample line

Selecting a good, representative sampling point is important for optimum performance of the instrument. The sample analyzed must be representative of the condition of the entire system. Erratic readings will be seen if sample is drawn from a location too close to points of chemical additions to the process stream, if mixing is inadequate, or if the chemical reaction is incomplete.

If the sample pressure into the instrument exceeds 5 psig at the analyzer inlet, flooding and instrument damage may result unless the sample conditioning kit is installed.

Install sample line taps into the side or center of larger process pipes to minimize the chance of ingesting sediment from the pipe line bottom or air bubbles from the top. A tap projecting into the center of the pipe is ideal. Refer to Figure 6.

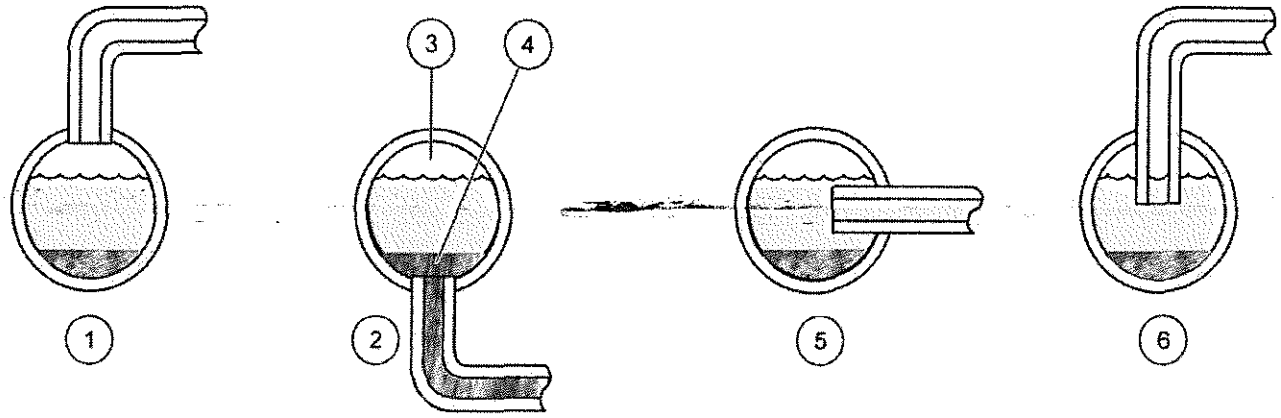

Figure 6 Sample line location in the process stream

1	Poor	**4**	Sediment (typical)
2	Poor	**5**	Good
3	Air (typical)	**6**	Best

3.6 Sample conditioning

All samples are "conditioned" using the single-sample, basic sample conditioning kit shipped with each analyzer. The kit eliminates large particles using a 40-mesh strainer.

The ball valve on the raw sample inlet line may be used to control the amount of bypass flow that is delivered to the filter. For dirty water, high bypass will adjust it to help keep the strainer clean longer, or adjust it to any partially open position for continuous bypass. Adjust the ball valve on the instrument supply line to control the flow rate of filtered sample to the instrument.

Note: *Installing the drain tee more than 2 feet above the instrument can result in excessive pressure which may cause leaks.*

Mount the centerline of the bypass drain tee two feet above the instrument. Refer to Figure 7. When properly mounted, the vacuum breaker design of the bypass drain tee prevents negative sample pressure and establishes the needed positive sample pressure for sample flow through the analyzer.

3.6.1 Assemble the sample conditioning kit

Refer to the complete system diagram in Figure 7 and the tips in Table 3 to assemble the components.

- Seal all threaded fittings with two wraps of Teflon® tape (provided).
- Two stops should be felt when installing tubing into the push-in fitting. The first is when the tubing clears the gripper ring, and the second is when the tubing meets the bottom of the itting. To prevent leaks, make sure to push the tubing all the way in.

Note: *To help grip the tubing, use rubber gloves or other material that grips and forcefully push the tubing into the fitting. Two stops should be felt; otherwise the tubing will not be fully inserted and will leak.*

- Be sure to cut all tubing used in the push-in fittings with a sharp knife so the ends are round, cleanly cut and not angled.
- The push-in fittings are designed for use with soft, ¼-inch OD plastic tubing as included in the kit. Tubing material such as PTFE or HDPE is recommended. The push-in fitting will not grip hard plastic or metal tubing and the tubing will slip out.

3.6.2 Use the sample conditioning kit

Assemble the head height regulator (stand-pipe) and filter as shown in Figure 7. Make sure the sample pressure to the sample conditioning is between 1.5 and 75-psig for proper operation.

1. Set flow by adjusting the ball valve (item 18, in Figure 7). The valve is fully closed when the lever is perpendicular to the valve body and fully open when the lever is parallel with the valve body.
2. Observe the flow in the unfiltered sample bypass (clear tube, item 13 in Figure 7). Make sure the flow is adjusted so there is always bypass flow.
3. Use the ball valve (item 19) to turn off sample flow to the instrument.

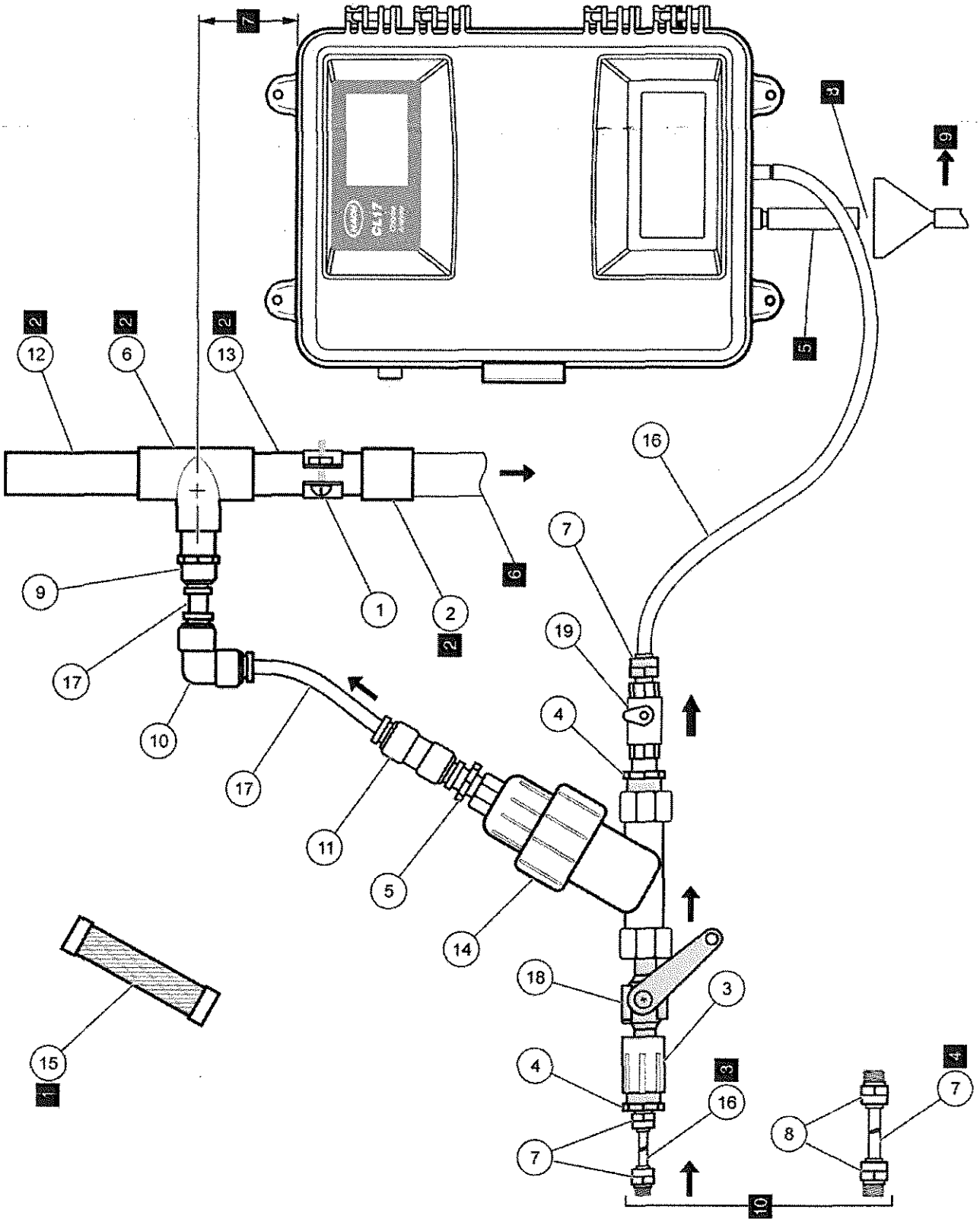

Figure 7 Sample conditioning kit

Table 1 Sample Conditioning Parts List (refer to Figure 7)

Item	Description	Qty	Catalog Number
1	Clamp, Conduit Hanger, 1-inch	4	47349-00
2	Coupling, 1-inch, SCH 40, PVC pipe	1	54175-00
3	Coupling, ½-inch FPT x ½ FPT PVC	1	54176-00
4	Fitting, Reduce Bushing, PVC, Hex	2	23002-00
5	Fitting, Stem Adapter, ½-inch O.D., ¼ NPT	1	54180-00
6	Fitting, Tee, 1-inch x 1-inch	1	46622-00
7	Fitting, Tube, Connector, Male (¼-inch tubing)	3	51246-00
8	Fitting, Tube, Connector, Male (½-inch tubing)	2	51262-00
9	Fitting, Tube, ½-inch O.D. x ½-inch Male NPT	1	54178-00
10	Fitting, Tube, ½-inch O.D. Union Elbow	1	54179-00
11	Fitting, Tube, ½-inch O.D., Union Straight	1	54181-00
12	Pipe, Pre-cut Drain, 1-inch Diameter, PVC	1	51239-00
13	Pipe, Drain, Clear	1	54174-00
14	Strainer, Y-body	1	54183-00
	Filter, 40-mesh Screen (provided with strainer and in Maintenance Kit, 55165-00)	1	54184-00
15	Teflon®, Thread Tape, ¼-inch wide	1	70608-24
16	Tubing, Polyethylene, 0.250 O.D., 0.040 W, Black	15 feet	30616-00
17	Tubing, Polyethylene, 0.500 O.D., 0.062 W, Black	10 feet	51159-00
18	Valve, Ball, PVC, ½ NPT, PVC	1	54177-00
19	Valve, Ball, PVC, ¼ NPT, PVC	1	51395-00

Table 2Sample condition kit parts list notes for Figure 7

1	The filter element is factory installed. A spare filter is provided in the Maintenance Kit.
2	Use PVC pipe cement to assemble. Leave pipe open to the atmosphere.
3	This the "Low Flow" option.
4	This the "High Flow" option.
5	The 1/2 inch drain tube must have an air-break. (Must be supplied by the customer.)
6	Use the Unfiltered Sample Bypass to return to system under zero pressure, if possible, or to drain. Use customer supplied PVC pipe as required to run to drain location.
7	Install the Sample Flow Regulator (Constant Head Device) 24 inches above the instrument.
8	Air Gap
9	Drain
10	Use either 7 and 16 or 8 and 17.

3.7 Optional air purge

Air purge may be necessary if the analyzer is located in an environment with high humidity and/or caustic vapors. The goal is to maintain a slight positive pressure in the instrument with dry instrument air.

The air purge connection is located on the left side of the instrument enclosure.
To connect an air supply, remove the plug in the quick connect fitting then connect ¼-inch poly tubing by pushing the tubing into the fitting. Two distinct "stops" will be felt as the tubing is correctly attached. If the tubing is not properly seated, it will come loose when air pressure is applied. Use only dry, oil-free instrument air at 15 scfh.

3.8 Electrical connections

All power connections are made through the conduit openings in the upper left side of the instrument. The instrument is shipped with plugs in all of the conduit openings. Wire the instrument for power, alarms, and relay connections using sealing-type conduit fittings, to maintain the IP62 environmental rating.

If connections are not made through a conduit opening, install a liquid-tight seal in place of the plugs to maintain the IEC 529 IP62 rating. Refer to Parts and accessories on page 49.

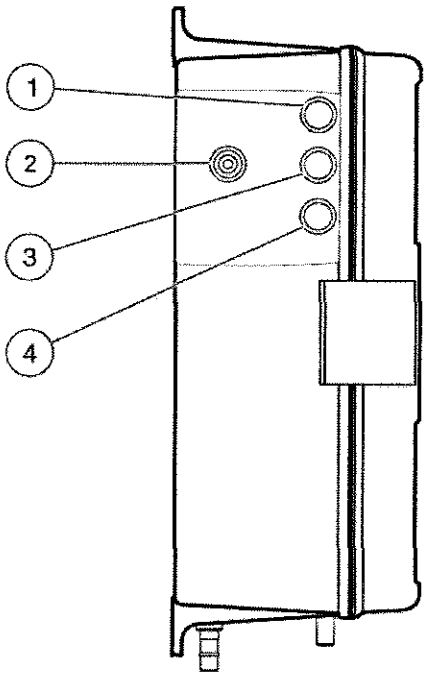

Figure 8 Location of air purge and electrical connections

1	Intended for wiring relays. Use sealing type fittings.	3	Network and 4-20 mA connections. Use sealing type fittings. ***Note:*** *If relay connections are not made, an liquid-tight seal (4221000) must be installed to maintain the IEC 529 IP62 rating.*
2	Optional air purge connection	4	Power connections. Use sealing type fittings.

3.8.1 Power connections

DANGER
Electrocution hazard. Only qualified personnel should conduct the tasks described in this section of the manual. Connect equipment in accordance with national, state and local electrical codes.

Power connections are made at the terminal strip located in the left side of the electrical compartment and are accessible when the customer access cover is opened. Refer to Figure 9 and Figure 12.

For process or industrial applications, the national electrical codes of most countries require that AC service feeds be hard-wired and contained in conduit systems. The CL17 Chlorine Analyzer has been designed to conform to this requirement.

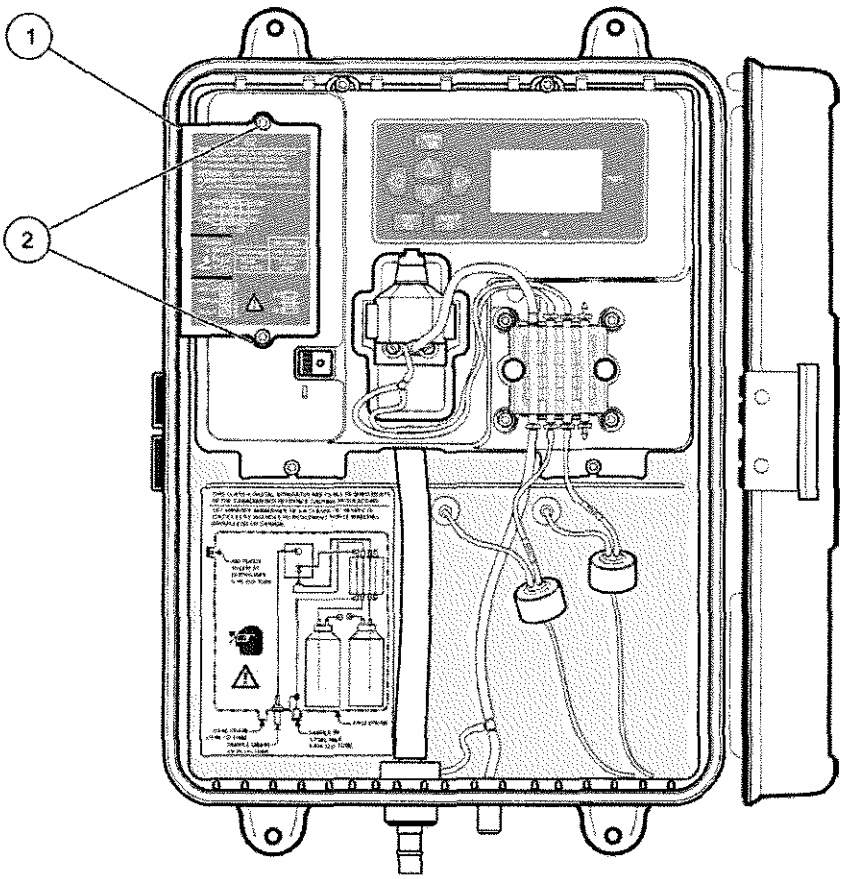

Figure 9 Locating and removing customer access cover

1	Customer access cover	**2**	Use a torx-driver to remove the two screws that hold the Customer Access Cover in place. Set cover aside.

Conduit is recommended for two reasons:

1. It is generally required by most local electrical codes.
2. Use of metal conduit can improve immunity to lightning surges and AC power transients.

Additionally, electrical and instrumentation standards require a local means of removing power from the product. **The instrument is supplied with a power on/off switch that is located inside the instrument enclosure. To remove relay power from the instrument, an external customer-supplied 5A fused switch or a 5A breaker is required.**

In hard-wired electrical applications, the power and safety ground service drops for the instrument should be no longer than 6 meters (20 feet) unless metal conduit is used to shield the AC power wiring. The wire should be 18 AWG.

In applications where power cords are allowed by local electrical codes and power surges and transients are not a great concern, a sealing-type strain relief and power cord with three 18 gauge conductors (including a safety ground wire) can be used. Refer to Figure 10 for strain relief assembly. The length of the power cord must not exceed 3 meters (10 feet).

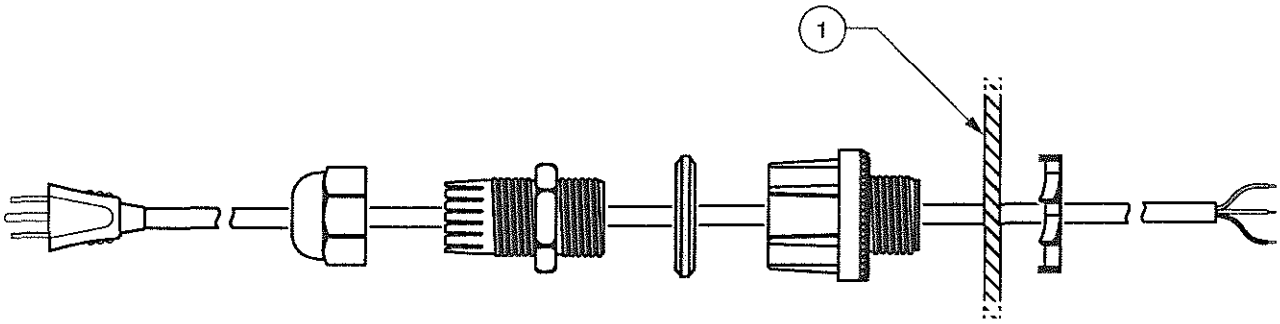

Figure 10 Assembling the optional power cord hardware

1	Wall section of the instrument closure

Description	Item number
115V Power cord with strain relief	5448800
230V Power cord with strain relief	5448900

3.8.2 Wiring the instrument

Connect the unpowered wires to the instrument power terminal as follows:

1. Strip the outside insulation of each wire back ¼-inch. Refer to Figure 14 on page 23.
2. Connect the three wires to the terminal using the information in Table 3 and Figure 11 on page 21.
3. Ensure the voltage setting is correct and supply power to the instrument.

Table 3 Terminal wiring information

Wire color code for:	Protective earth ground	Hot or Ø1	Neutral or Ø2
North America	Green	Black	White
IEC	Green with yellow tracer	Brown	Blue

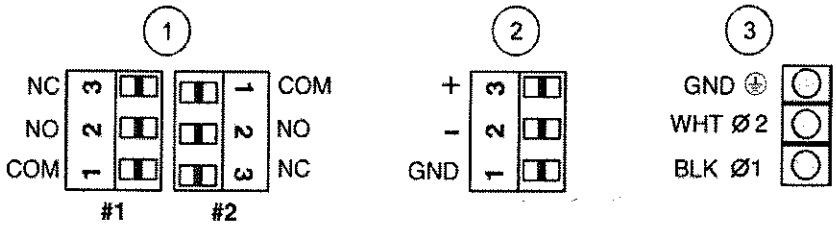

Figure 11 Customer connections to analyzer

1	Relays	3	AC power: 100-115/230 VAC, 50/60 Hz, 90 VA fused at 2.50A
2	Recorder		

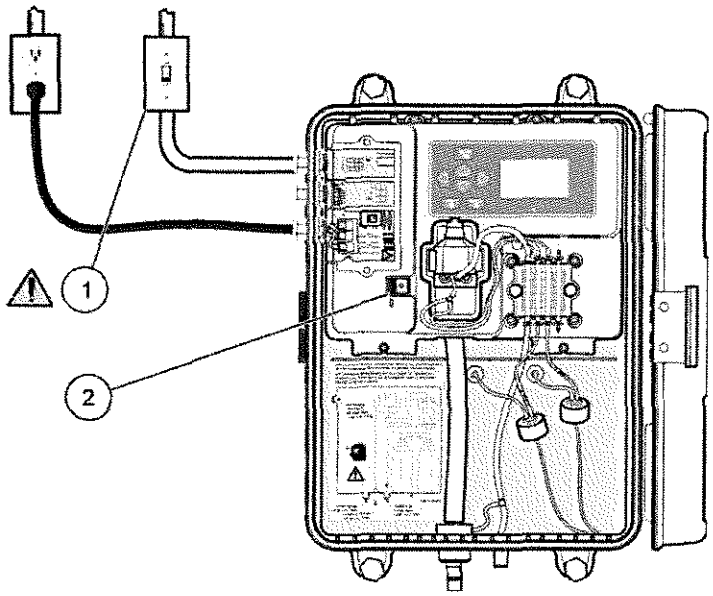

Figure 12 Power connections

1	A method to remove power from the relays locally must be available in case of an emergency or for servicing the instrument.	2	Since the ON/OFF switch can be accessed without the use of a tool an external switch is not required for instrument power.

3.8.3 ⚠ Voltage selection for alternate voltage operation

Note: *The voltage selector switch must be set properly for the line voltage to be used. An improper setting can result in serious damage to the instrument when power is applied. Refer to Figure 13.*

The instrument is switched for 115-volt operation when it leaves the factory. To convert the instrument for 230-volt operation, slide the AC line conversion switch (shown in Figure 13) to the 230V position. The fuses used in this product are 5 mm x 20 mm. The fuses used are approved for both North American and European use; they do not need to be changed when voltage is converted.

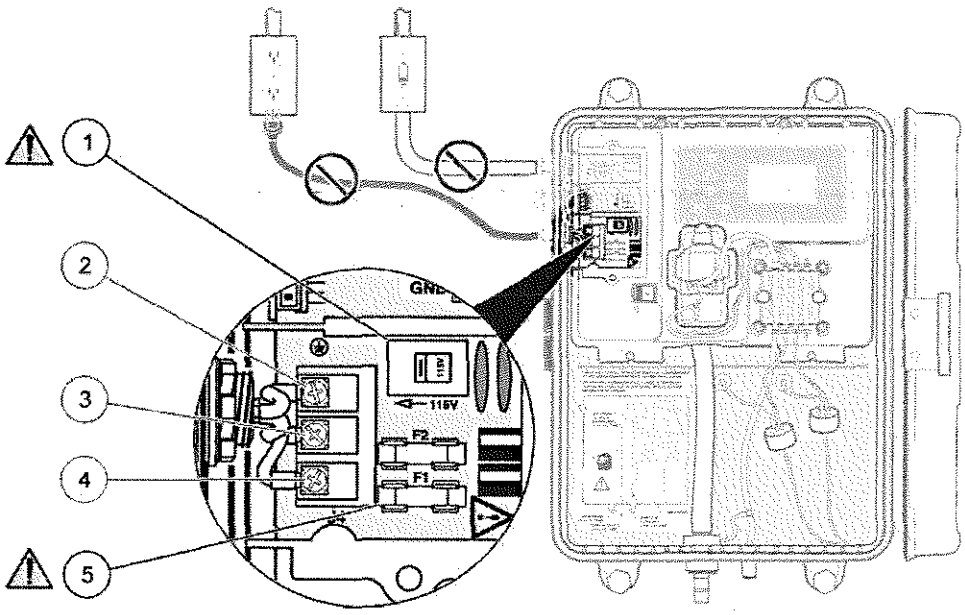

Figure 13 Voltage selector switch and fuse replacement

1	Voltage selection switch (SW1). Factory set at 115V.	**4**	Hot / Black Ø1
2	GND	**5**	Fuses (F1, F2) (T, 2.5A, 250V)
3	Neutral / White Ø2		

3.8.4 ⚠ Alarm connections

CAUTION
Fire hazard. Current to the relay contacts must be limited to 5 amps resistive. A method to remove power from the relays locally must be available in case of an emergency or for servicing the product. Power removal can be accomplished with an external switch and a 5-amp fuse or with a switched 5-amp circuit breaker.

The analyzer contains two alarm relays designed for use with either high voltage (greater than 30V-RMS and 42.2V-PEAK or 60 VDC) or low voltage (less than 30V-RMS and 42.2V-PEAK, or less than 60 VDC), but not a combination of both high and low voltage. Refer to 3.8.5, Figure 11, and Figure 15 along with the instructions below for connection information.

The Normally Open and Common relay contacts will be connected when an alarm condition is active.

The relay connector accepts 18-12 AWG wire. Wire gauge should be determined by load application. Wire gauge less than 18 AWG is not recommended.

1. Make sure no power is supplied to the instrument.
2. Strip the insulation on each wire back ¼-inch. Refer to Figure 14.
3. Remove the connector from the instrument if desired.
4. Insert the wire ends into the connector until the insulation seats against the connector. Refer to Figure 14. (Do not seat the insulation under the terminal pinch plates.)
5. Replace the connector if necessary and supply power to the instrument.

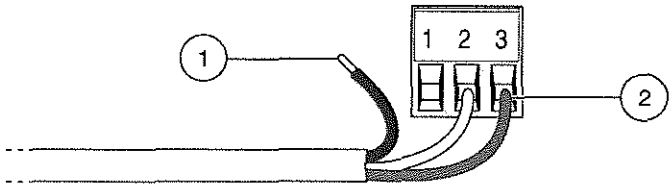

Figure 14 Proper wire preparation and insertion

1	Strip ¼ in. of insulation	**2**	Seat insulation against connector with no bare wire exposed.

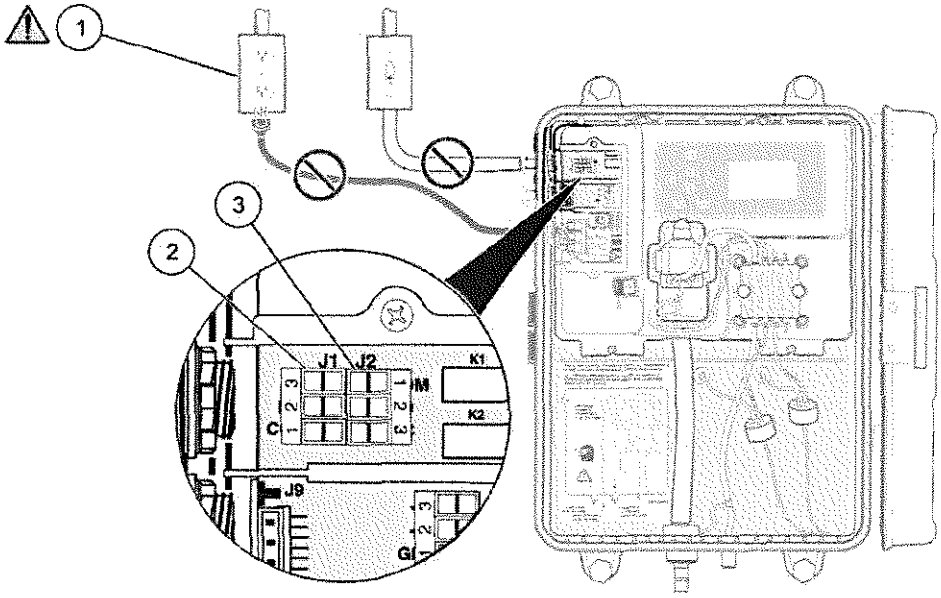

Figure 15 Alarm connections

1	Current to the relay contacts must be limited to 5 amps. ***Note:*** *Make sure no power is supplied to the instrument.*	**3**	J2 alarm connections terminal block: Terminal 1 = COM; Terminal 2 = NO; Terminal 3 = NC
2	J1 alarm connections terminal block: Terminal 1 = COM; Terminal 2 = NO; Terminal 3 = NC		

3.8.5 Recorder output connections

The recorder output is a 4–20 mA current-source output. Make recorder connections with twisted-pair shielded wire and connect the shield at the recorder, controlled component end or at the analyzer end. Do not connect the shield at both ends of the cable.

Make wiring connections at the analyzer end as follows:

1. Make sure no power is supplied to the instrument.
2. Remove the Customer Access Cover (refer to Figure 9 in the manual).
3. Strip the insulation on each wire back ¼-inch. Refer to Figure 14.

Note: *Use a twisted-pair, shielded cable. Use of non-shielded cable may result in radio frequency emission or susceptibility levels higher than allowed.*

4. Route the wire through an available strain relief.

5. Remove the connector from the instrument. Refer to Figure 16 on page 24for connector position.
6. Insert the wire ends into the connector (refer to the table below) until the insulation seats against the connector as shown in Figure 14. (Do not seat the insulation under the terminal pinch plates.)

Recorder Wires	Circuit Board Markings
Recorder +	+
Recorder –	–
Shield	GND

7. Replace the connector and supply power to the instrument.

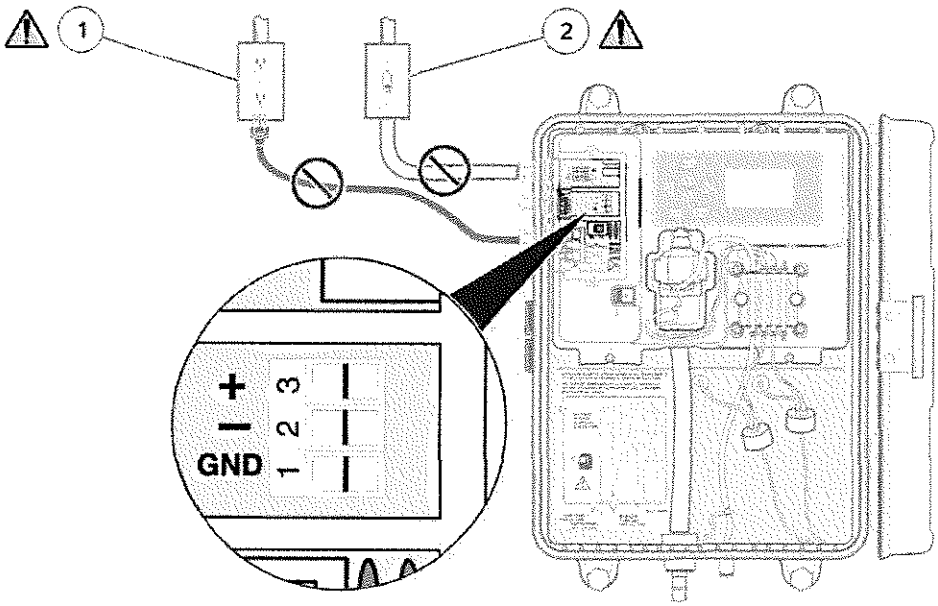

Figure 16 Recorder connections

1	Make sure no power is supplied to the instrument	2	Make sure no power is supplied to the relay

3.9 Install the pump/valve pinch plate

To eliminate the effects of constant pressure on the pump tubes during shipment and storage, the pinch plate and screws for the pump/valve module are shipped in the installation kit and the pump tubes are held in place with tape.

Reagent flow through the pump/valve module must be from bottom to top. If reversed, fluid mixture will be pumped from the colorimeter sample cell, causing reagent bottles to overflow.

Complete the assembly of the pump/valve module as follows:

1. Remove the tape.
2. Make sure the individual pinch blocks are positioned as shown in Figure 17, with the dissimilar-shaped block on top.
3. Align the pinch plate on the pump/valve module (refer to Figure 18).

4. Install the two screws through the pinch plate and into the pump/valve module. Secure the pinch plate by turning the screws in small increments moving from one screw to the other so that the plate is drawn down evenly. Tighten until the plate is seated against the pump/valve module.

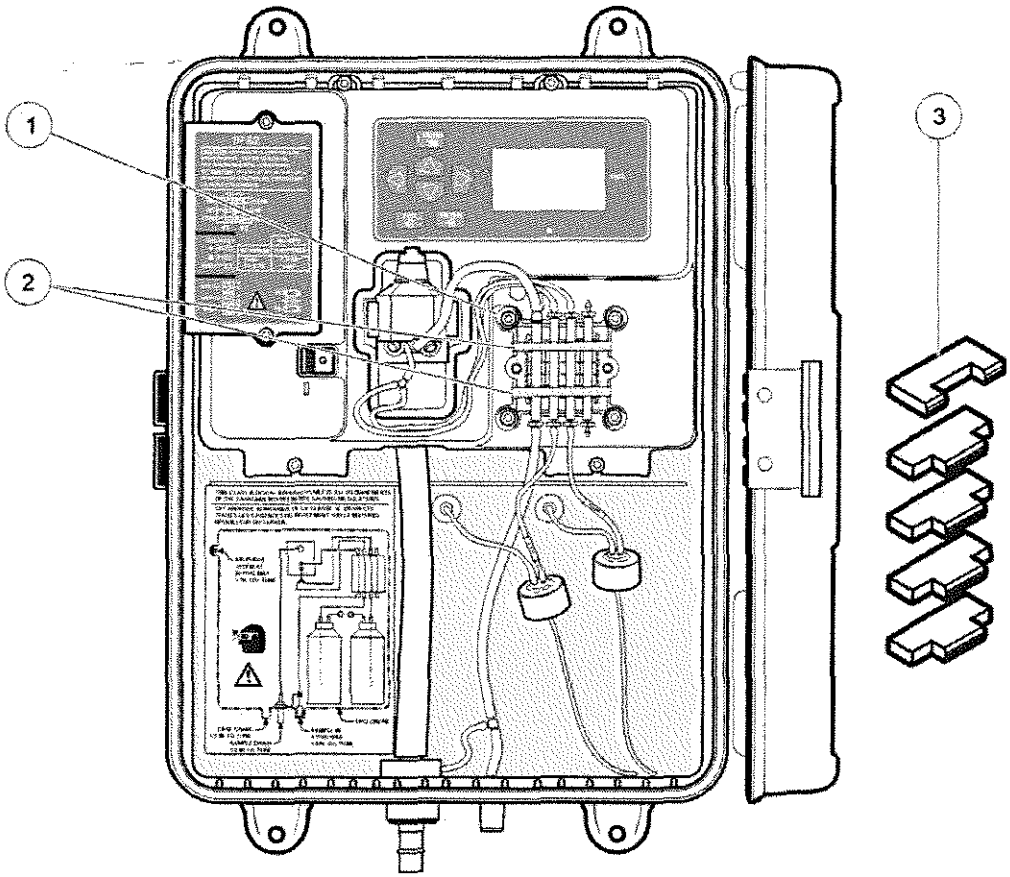

Figure 17 Installing pump/valve module pinch blocks

1	Pump/Valve module	3	The dissimilar-shaped block should be on top
2	Remove tape from tubes		

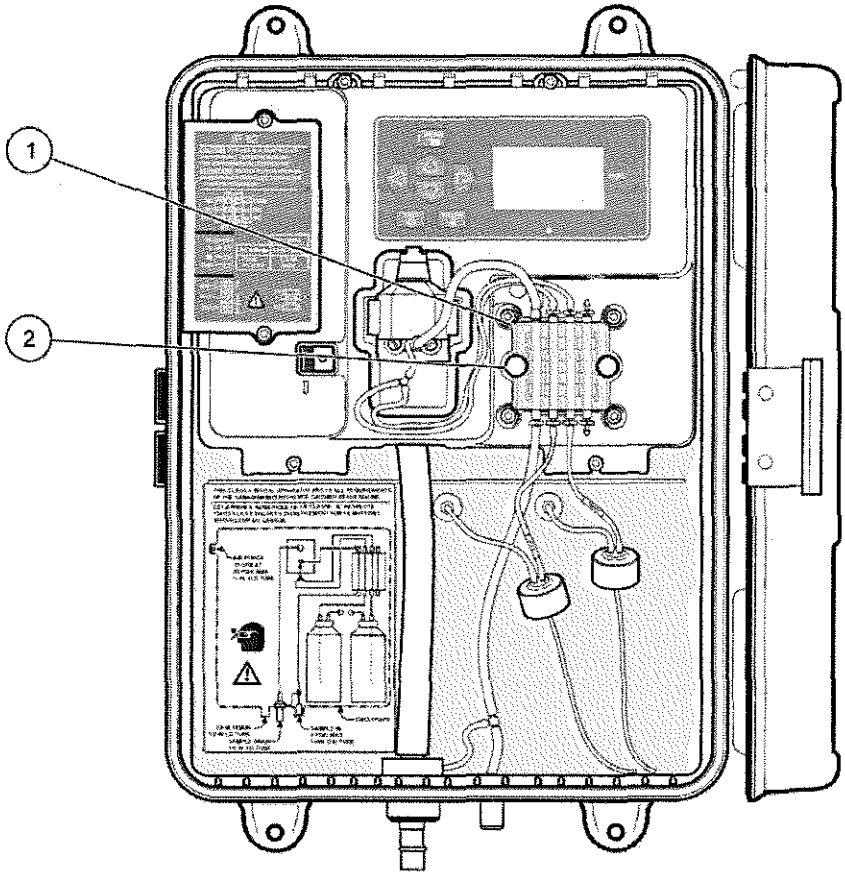

Figure 18 Aligning the pump/valve module pinch plate

1	Align pinch plate with pump/valve module	2	Install screws. (Advance the screws in small increments moving from one screw to the other so that the plate is drawn down evenly.)

Section 4 System Startup

CAUTION
Chemical exposure hazard. To familiarize yourself with handling precautions, dangers and emergency procedures, always review the Material Safety Data Sheets prior to handling containers, reservoirs, and delivery systems that contain chemical reagents and standards. Protective eye wear is always recommended when contact with chemicals is possible.

Preliminary tasks necessary for placing the instrument in operation are defined below in their recommended sequence. Once these preliminary steps are performed, the instrument will be operational.

4.1 Install the reagents

The analyzer requires two reagents, a buffer solution and an indicator (Table 4). Space is provided in the instrument enclosure for a 500-mL bottle of each of the reagents. Two reagents used in the chlorine analysis are installed in the analyzer hydraulic section and replenished at monthly intervals. One is the buffer solution, Free Chlorine Buffer, Cat. No. 2314111, used to determine free available chlorine, or Total Chlorine Buffer, Cat. No. 2263511, used for total chlorine analysis. The buffer solutions are completely formulated at the factory and are ready to install. Remove the cap and seal from the buffer solution bottle and install the cap and tubing labeled *BUFFER* to the buffer solution bottle.

Note: *It is normal for the reagent tubing to become discolored over time.*

The second reagent, the indicator solution, must be prepared.
The indicator solution and indicator powder must be mixed just before use to ensure the best instrument performance. Using the powder funnel provided in the maintenance kit, add the contents of one bottle of DPD High Range Powder, Cat. No. 2297255, to a bottle of Total Chlorine Indicator Solution, Cat. No. 2263411, or a bottle of Free Chlorine Indicator Solution, Cat. No. 2314011. Stir or shake until the powder is dissolved completely. Remove the cap from the reagent bottle and install the cap and tubing labeled INDICATOR to the reagent bottle. Tubing should be inserted to the bottoms of the bottles to prevent air from being drawn in when the level in the bottle drops.

Table 4 Buffer and indicator solutions

Test Type	Required Reagent	Item No.	Reagent Set Item No.
Free Chlorine	Free Chlorine Buffer Solution	2314111	2556900
	Free Chlorine Indicator Solution	2314011	
	DPD Indicator Powder	2297255	
Total Chlorine	Total Chlorine Buffer Solution	2263511	2557000
	Total Chlorine Indicator Solution	2263411	
	DPD Indicator Powder	2297255	

Remove each reagent bottle cap and replace it with the special two-part bottle cap that is connected to the delivery tube inside the instrument.

4.2 Install the stir bar

A small stir bar for the sample cell in the colorimeter assembly is included in the installation kit furnished with the instrument. The stir bar must be installed for the instrument to operate properly.

Install the stir bar as follows:

Note: *Make sure the stir bar drops down into the colorimeter and remains in the colorimeter.*

1. Remove the plug in the top of the colorimeter.
2. Drop the stir bar into the hole. Refer to Figure 19. The bar should rest on the bottom of the vertical bore.
3. Replace the plug.

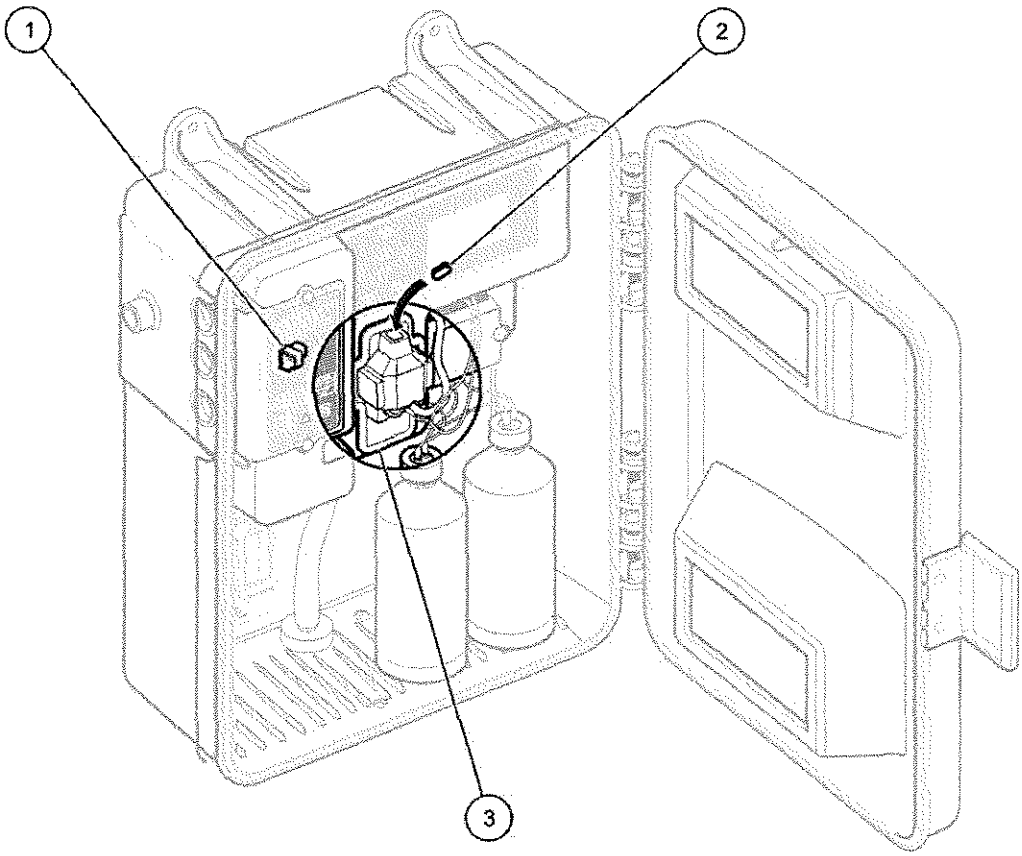

Figure 19 Installing the stir bar

1	Remove the plug from the top hole of the colorimeter	3	Colorimeter assembly
2	Drop the stir bar into the hole and replace the plug. (The stir bar is shown larger than actual size.)		

4.3 Supply the sample

Note: *Make sure the pressure plate is securely attached to avoid backflow of the sample into the reagents.*

Start sample flow through the instrument by opening the supply valve (item 19 in Figure 7 on page 16). Allow the pressure in the tubing to stabilize and check for leaks.

Until the surface of the sample cell becomes completely wetted, bubbles may cling to the sample cell and cause erratic readings. This condition is temporary. Its duration depends on the sample properties.

4.4 Supply power to the analyzer

The power switch is located inside the enclosure door in the recessed area to the left of the colorimeter block. Set the POWER (–/O) switch to ON (–) and allow the analyzer to operate for approximately two hours to ensure the system is completely wetted with reagents and sample.

Section 5 Operation

5.1 Keypad and display information

The instrument display defaults to normal Concentration Measurement Mode unless keys are pressed to change it. Table 5 shows the functions for each key.

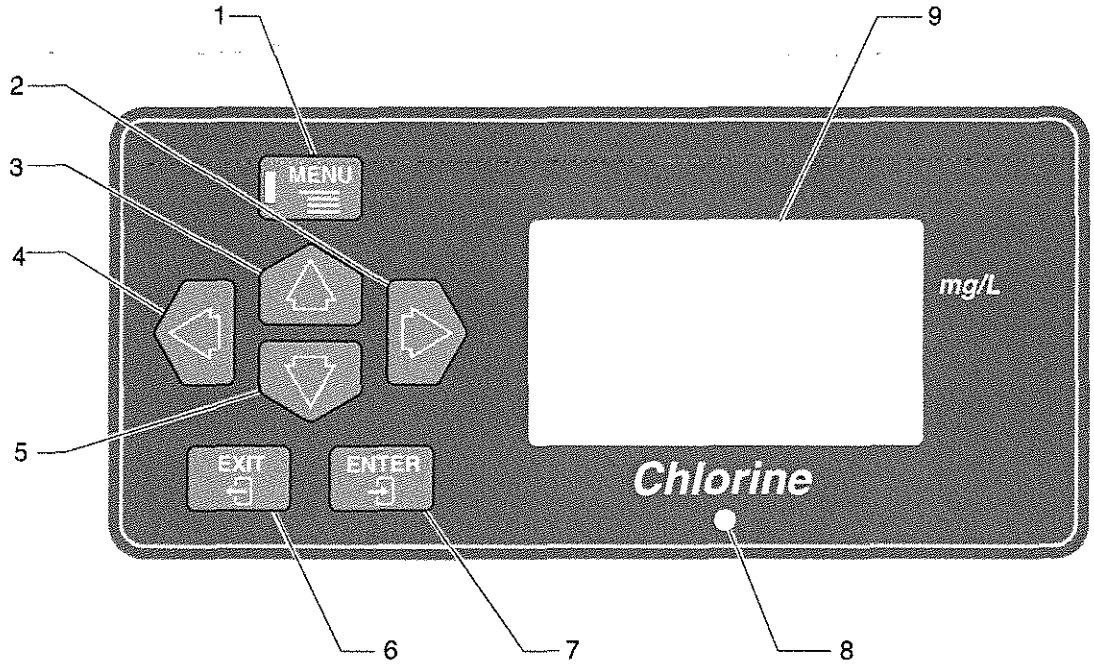

Figure 20 Analyzer keypad and display

Table 5 Keypad Description

Number	Key	Description
1	**MENU**	In measurement mode, pressing the **MENU** key allows access to **ALARM**, **RECORDER**, **MAINTENANCE** and **SETUP** menus.
2	**RIGHT ARROW**	Allows movement so different components of the display can be edited. Active when the right arrow icon is shown on the display.
3	**UP ARROW**	Use to scroll through menu options or edit display components. Active when the up / down arrow icons are shown on the display.
4	**LEFT ARROW**	Allows movement so different components of the display can be edited. Active when the left arrow icon is shown on the display.
5	**DOWN ARROW**	Use to scroll through menu options or edit display components. Active when the up / down arrow icons are shown on the display.
6	**EXIT**	Rejects an edited value or backs out of the menu structure.
7	**ENTER**	Accepts an edited value, moves deeper into the menu structure, or accepts a menu option.
8	Alarm LED	Indicates an active alarm.
9	Display Screen	Display area for measurement and menu information.

5.2 Instrument menu structure

The major menus in the CL17 Analyzer consist of **ALARMS**, **RECRDR**, **MAINT**, and **SETUP**. Press the **UP** or **DOWN ARROW** keys to access the menus. The sections below give information on the functions of each of the menus and the submenus within them.

5.2.1 Setup menu

Day-to-day analyzer functions are accessed from the **SETUP** menu. To enter the **SETUP** menu, press the **MENU** key, then use the **UP ARROW** key to scroll to the **SETUP** option. Press **ENTER**.

Scroll through the **SETUP** menu options using the **UP** and **DOWN ARROW** keys. Press **ENTER** to select the displayed menu option. Arrow icons are displayed if the display is editable. Press the **EXIT** key to back out of a menu and return to **SETUP**. The menu information in Table 6 is in the order it appears in the **SETUP** menu.

Table 6 Setup menu options

Menu option	Description
SIGAVG	The SIGAVG feature is used to average readings and prevent erratic recorder output signals. Press **ENTER**, use the **UP** and **DOWN ARROW** keys to select 1, 2, 3, or 4, then press **ENTER** to accept the displayed selection. Depending on the value selected, the last 1, 2, or 3 measurements are averages and the reported concentration is the averaged values. Option 4 is a special filter, which only reports the maximum value between the current reading and the last. This feature reduces negative spikes due to bubbles and other abnormalities in the sample. The factory default is 1. Press **EXIT** to return to the **SETUP** menu. ***Note:*** *A properly maintained instrument in good working condition will read within the accuracy specifications presented in Specifications on page 3. The calibration function should never be used to force an analyzer that is not working correctly to display a correct reading. Calibrations are intended for very small adjustments only.*
CAL ZERO	This feature is used to offset the instrument zero using a prepared zero standard. If the offset is too large, a marginal zero (MARG Z) warning will occur. Refer to Calibration on page 36.
CAL STD	This feature is used to adjust the analyzer slope using a prepared standard. If the adjustment is too large, the analyzer will not accept it and a marginal gain (MARG G) warning will occur. The new standard will not be accepted and it will have to be checked again using another method to establish a more exact reading. Refer to Calibration on page 36.
CAL DEFAULTS	(Calibration Default Settings) Press **ENTER** to return the calibration settings back to factory defaults and set the Gain to 1.0 and the Offset to 0. Use this feature to remove calibrations that are causing a MARG G or MARG Z to be displayed.
OFFSET	Press **ENTER** to momentarily display the current Zero correction factor. The factory default is 0.
GAIN	Press **ENTER** to momentarily display the current Gain correction factor. The factory default for gain is 1, however, readings of 0.8 to 1.25 are acceptable.
DISPLAY TEST	Press **ENTER** to momentarily display all LCD segments to visually check that the complete display is functioning.
RECMIN	Recorder signal test. Press **ENTER** to drive the Recorder output to its minimum (normally 4 mA) and hold it there until the next analysis is complete.
RECMAX	Recorder signal test. Press **ENTER** to drive the Recorder output to its maximum (normally 20 mA) and will hold it there until the next analysis is complete. ***Note:*** *To hold the signal longer, press the **MENU** key then the **DOWN ARROW** key to scroll to MAINTENANCE. Press **ENTER** then scroll down to **HOLD OUTPUTS** and press **ENTER** again.*
REC ADJUST	Press **ENTER** to modify the Recorder Minimum and Recorder Maximum values. Use this feature to offset the 4 or 20 mA output signal to force a chart recorder to read zero or full scale in case of a small discrepancy. Use the **RIGHT** and **LEFT ARROW** keys to select **RECMIN** or **RECMAX** then use the **UP** and **DOWN ARROW** keys to adjust the value. Press **ENTER** to select. Press **EXIT** to accept changes and return to **SETUP**. ***Note:*** *The numbers on the display are A/D counts and cannot be used to determine the recorder setting.*

Table 6 Setup menu options

Menu option	Description
RELAY TEST	Press **ENTER** to momentarily turn the relays off, then sequentially turn on ALARM1 and ALARM 2. Automatically clears both alarms to complete the test.
REF[1]	Momentarily displays the last Reference A/D counts.
SAMPLE[1]	Momentarily displays the last Sample A/D counts.
ZERO[1]	Momentarily displays the last Zero A/D counts.
CYCLE TIME[1]	Momentarily displays the Motor On time (in seconds).
POWER FAIL WARNING	Sets the power fail warning to **ON** or **OFF**. Press **ENTER** then use the **ARROW** keys to toggle between **ON** and **OFF**. Press **ENTER** to select. Press **EXIT** to accept changes and return to **SETUP**. If the power fail warning is turned on and the power is interrupted, a system warning will be generated when power is restored. The factory default is off.
DIAG OUTPUT	Pressing **ENTER** will momentarily indicate **ON** at the display and any optional LonWorks® interfaces present will receive diagnostic data.
KEYBOARD LOCKOUT	Press **ENTER** then use the **ARROW** keys to toggle between **ON** and **OFF**. Press **ENTER** to select the displayed option. Press **EXIT** to return to the **SETUP** menu. If the keyboard is locked out, no editing functions are allowed and all diagnostics are disabled except this one. The factory default is **OFF**.
LANGUAGE	English language is the factory default. Spanish, French, and German can be enabled. Press **ENTER** then use the **ARROW** keys to move between the available options. Press the **ENTER** key when the language of choice is displayed. Press the **EXIT** key to accept changes and return to **SETUP**.
DEFAULT SETUP	Cold Start—Press **ENTER** to reset the instrument to factory defaults. All user-specified settings will be lost. The display will show the software version number (V 1.2 for example) until the next analysis is complete.

[1] These functions are used by service technicians to troubleshoot the instrument.

5.2.2 Alarm setup

This menu accesses two unpowered alarm relays (**AL1** and **AL2**), **RECALL WARNINGS**, and **CLEAR WARNINGS**. The alarm relays may be assigned to one of the alarm functions listed below. Only one function can be assigned to each relay.

- **LO**—Alarm is triggered if concentration is less than or equal to the trip point. (0.0 mg/L to 5.0 mg/L limits)
- **HI**— Alarm is triggered if concentration is greater than or equal to the trip point. (0.0 mg/L to 5.0 mg/L limits)
- **SYSTEM ALARM (SA)**—Activates an alarm when a system alarm occurs.
- **SYSTEM WARNING (SW)**—Activates an alarm when a system warning occurs.

In addition, alarm status can be obtained and alarms can be cleared using this menu.

The relay is activated when an alarm condition occurs. Either relay may be activated on a high chlorine alarm, a low chlorine alarm or when a System Warning or System Alarm occurs. Alarm relays can be used to control chemical feeds as an on/off control, by using them as a high or low alarm set point.

The two alarm relays can also be used to bracket a specific control range by adding a double-pole double-throw auxiliary relay and wiring it to electrically latch. This allows the pump to be turned on at a low level and off at a higher level—with the concentration dropping down in between.

Perform the procedure below to assign functions to AL1 or AL2:

1. Press the **MENU** key. **ALARMS** will be displayed.
2. Press **ENTER** to select **ALARMS**. The screen will display AL1 (or AL2), and either the alarm set point (HI or LO), SA (System Alarm), or SW (System Warning).
3. To change the AL1 (or AL2) assignment, press **ENTER** again. The item to be changed will flash. The arrow icons indicate active arrow keys. Scroll through the available assignments. Press the **RIGHT ARROW** key to change the value of the high or low alarm.
4. Press **ENTER** to select the displayed assignment.
5. Repeat the procedure to customize the other alarm relay.

In addition, a selection to recall or clear warnings is available. Access as follows:

1. Press the **MENU** key. **ALARMS** will be displayed.
   a. Press **ENTER** to select **ALARMS**. The resulting screen will display AL1 (or AL2) along with the alarm set point (HI or LO), SA (System Alarm), or SW (System Warning).
2. Scroll through the options. When the appropriate option is displayed, press **ENTER**.
   - **RECALL WARNINGS**—Momentarily shows all active warnings then displays **DONE**.
   - **CLEAR WARNINGS**—Clears all resolved warnings then momentarily displays **OK**.
3. Press **EXIT** twice when done.

5.2.3 Set the recorder output span

This menu allows the Recorder Output High and Low limits to be set and also offers the capability to use the ON SYSTEM ALARM option to communicate an alarm condition. Use ON SYSTEM ALARM to send a signal to the control room using the recorder output, to drive any device being controlled to full off, or to maintain the present level if the analyzer goes into System Alarm status and shuts off.

The CL17 is supplied with the recorder output set at maximum range. At maximum range, a chlorine concentration of 0 mg/L provides an output of 4 mA and a concentration of 5 mg/L gives an output of 20 mA. The output span can be adjusted to bracket any portion of the 0–5 mg/L range with the
4–20mA signal. For instance, this function can be used to bracket a lower range for increased recorder resolution.

For example: if chlorine concentration of your sample is normally 0.5–0.7 mg/L, the recorder output span can be set for 0–1 mg/L (where 4 mA equals 0 mg/L and 20 mA equals 1 mg/L).

Alternatively, the output can be bracketed between 2–4 mg/L to control chemical feeds, or the signal can be inverted by assigning a higher mg/L reading for REC LO and a lower mg/L reading to REC HI.

Initially, select an output span that will cover the expected range of chlorine concentration in the sample. Determine the correct minimum and maximum values by monitoring chlorine values in your sample over time. Adjust the minimum and maximum values if necessary, to obtain the best span for your specific application.

Adjust the recorder output minimum and maximum values using the analyzer keypad:

1. Press the **MENU** key.
2. Scroll to **RECR DR** menu and press **ENTER**. The display will show **REC LO** and a mg/L reading. Move to **REC HI** or **ON SYSTEM ALARM**.
3. Press **ENTER** to change the displayed mg/L reading for **REC LO** or **REC HI**. The digit to be changed will flash.
4. Change the digit or move to another digit. Appropriate values and selections are shown below. When the value is correct, press **ENTER** to accept.
   - **REC LO**—0.0 mg/L to 5.0 mg/L limits.
   - **REC HI**— 0.0 mg/L to 5.0 mg/L limits.
   - **ON SYSTEM ALARM**—Select minimum, maximum, or hold to define the recorder output when a system alarm is initiated.
5. Press **EXIT** to return to the main menu. Press **EXIT** again to return to normal operation.

5.2.3.1 Change to 0 to 20 mA output range

Set the lower end of the output range to 0 mA instead of 4 mA as follows:

1. Press the **MENU** key then scroll to the **SETUP** menu. Press **ENTER**.
2. Scroll to **REC ADJUST** and press **ENTER**.

Note: *A large number may be displayed for the minimum value, this number refers to counts, not milliamps. Proceed with step 4.*

3. Adjust the displayed value to 0. Press **ENTER** to accept the value. Press **EXIT** twice to return to normal operation.

5.2.4 Maintenance menus

The following selections allow the user to perform standard maintenance tasks. Use the **ARROW** keys to scroll through the menu selections, then press **ENTER** to select the displayed menu option.

- **PRIME**—This feature causes the analyzer to make 39 concurrent accelerated cycles to prime the reagent lines. Press **ENTER** to activate. At the end of 39 cycles, the analyzer will return to normal operation. To terminate the prime cycle before all 39 cycles are complete, press **EXIT**. The analyzer will return to normal operation.
- **CLEAN**—This feature stops the analyzer in the last portion of the measurement cycle. Sample and reagents are left in the sample cell for cleaning purposes. The analyzer remains in the clean mode for 60 minutes. To terminate the cycle earlier, press the **EXIT** key. The analyzer will return to normal operation.
- **HOLD OUTPUTS**—This feature allows the alarms to be locked out and the recorder output to be held at its present level for maintenance purposes. Activate this feature as follows:
  a. Press **ENTER** then the **UP ARROW** key to activate for 60 minutes. The alarm LED will be flashing.
  b. To deactivate the feature, and return to normal operation, press the **MENU** key then the **DOWN ARROW** key until **HOLD OUTPUTS** is displayed.
  c. Press **ENTER**.
  d. Select **OFF** and press **ENTER** again.

5.3 Calibration

The CL17 Chlorine Analyzer is factory calibrated. A built-in electronic curve is preprogrammed into the instrument. **This instrument does not require recalibration unless specified by your regulatory agency for compliance reporting purposes.**

If you are required to do a two-point calibration or if your sample stream chlorine concentration is typically less than 0.5 mg/L, follow the instructions in section 5.3.1. If your sample stream chlorine concentration is typically greater than 0.5 mg/L, you can perform a Calibration by Comparison as detailed in section 5.3.2.

If the calibration you perform requires you to adjust the CAL ZERO by more than 0.2 mg/L, a SYSTEM WARNING caused by a MARGINAL ZERO error will appear. Similarly, adjusting the CAL STD by more than 10% (up or down) will produce a MARGINAL GAIN ERROR.

If either of these errors occur, reset the instrument to the default calibration (refer to section 5.2), check the standards, and repeat the calibration. If the error messages persist, contact the Customer Service department.

5.3.1 Calibration on known standards

CAUTION
Chemical exposure hazard. To familiarize yourself with handling precautions, dangers and emergency procedures, always review the Material Safety Data Sheets prior to handling containers, reservoirs, and delivery systems that contain chemical reagents and standards. Protective eye wear is always recommended when contact with chemicals is possible.

This procedure provides the best over all accuracy by establishing the zero mg/L reference and the span setting. Perform the calibration as follows:

1. Prepare a zero chlorine reference solution by adding approximately 4 mL of Ferrous Ammonium Sulfate, Cat. No. 181133NC, to approximately 2 liters of the normal sample or chlorine-free demineralized water.

Note: *Enter the zero value before the chlorine standard value.*

2. Place a container of zero reference water above the analyzer with at least two feet of head. Plumb the system to enable the sample flow to be shut off so the zero reference water can enter the analyzer in its place. Allow the analyzer to run on zero reference water for approximately 10 minutes.
3. When the readings are stable, set the zero reference.
   a. Enter the **SETUP** menu.
   b. Press the **DOWN ARROW** key until **CAL ZERO** is displayed.
   c. Press **ENTER** to display the current measured value.
   d. Press **ENTER** to force the value to zero.
4. Prepare a chlorine standard solution with a value between 3 and 5 mg/L. Determine the value of the standard to the nearest 0.01 mg/L.
5. Remove the container of zero reference water and substitute the chlorine standard solution. Allow the analyzer to run on the standard solution for approximately 10 minutes.
6. When the readings are stable, enter the **SETUP** menu.
7. Press **ENTER** when **CAL STD** is displayed. The current measured value is displayed.

8. Press **ENTER** and edit the value. Press **ENTER** again to accept the value.The measured value will be forced to the entered value. Press the **EXIT** key three times to return to normal display mode.
9. Remove the standard and restore sample flow to the analyzer. The instrument is now calibrated.

5.3.2 Calibration by comparison

Note: *Make sure sample chlorine concentration is relatively stable before taking a grab sample for laboratory analysis. Perform the laboratory analysis as quickly as possible.*

Calibration by comparison involves analyzing the sample stream with a reliable, accurate laboratory method, such as a DPD spectrophotometric or amperometric titration method then setting the analyzer to match. Accuracy specifications over the full 0 to 5 mg/L range cannot be assured unless the sample chlorine concentration used for calibration is greater than 3.0 mg/L. Setting the calibration at a lower concentration may provide accuracy at that point but can cause large errors in other portions of the span.

Perform a calibration by comparison as follows:

1. When the sample chlorine concentration is relatively stable, obtain a grab sample for analysis.
2. Perform a laboratory analysis (DPD spectophotometric or amperometric titration method) on the grab sample and record the value.
3. Enter the **SETUP**.
4. Press **ENTER** when **CAL STD** is displayed. The current measured value is displayed.
5. Press **ENTER** and edit the value to match the value from the laboratory analysis. Press **ENTER** again to accept the value. The measured value will be forced to the entered value.
6. Press the **EXIT** key three times to return to normal display mode.

Section 6 Maintenance

DANGER
Multiple hazards. Only qualified personnel should conduct the tasks described in this section of the manual.

CAUTION
Chemical exposure hazard. To familiarize yourself with handling precautions, dangers and emergency procedures, always review the Material Safety Data Sheets prior to handling containers, reservoirs, and delivery systems that contain chemical reagents and standards. Protective eye wear is always recommended when contact with chemicals is possible.

6.1 Scheduled maintenance

6.1.1 Replenish the reagents

One 500-mL bottle each of buffer and indicator solution lasts approximately one month. Discard the old containers with any unused contents and install the new bottles as described in section 4.1 on page 27.

6.1.2 Replace the pump tubing

Over a period of time, the clamping action of the pump/valve module will soften the tubing and cause it to collapse and obstruct liquid flow. This breakdown is accelerated at high temperatures. The following replacement schedules, based on ambient operating temperature, are recommended:

- Below 27 °C (80 °F), replace at six-month intervals.
- Above 27 °C, replace at three-month intervals.

Pump tube replacement procedure:

1. Shut off sample flow to the instrument and set the POWER (I/O) switch to OFF (O).
2. Remove the screws securing the pinch plate to the pump/valve module. Refer to section 3.9 on page 24. Loosen in small increments, moving from one screw to the other to allow tension to be relieved evenly. Remove the plate.
3. Disconnect the pump tubes from the inlet and outlet fittings and discard the tube assemblies.
4. Cut four 2-inch lengths of 1/16-inch ID tubing (white). Install one 1/16-to 1/8-barb elbow fittings in one of the 1/16-inch ID tubes (white) and 1/16-inch barb union fittings in the three remaining tubes. Although one of the pump tubes is not used for fluid flow, it must be included to provide even compression on all four tubes.
5. Install the two screws through the pinch plate and into the pump/valve module. When securing the pinch plate, advance the screws in small increments moving from one screw to the other so that the plate is drawn down evenly. Tighten until snug, do not overtighten.
6. Set the POWER (I/O) switch to ON (I) and restore sample flow through the instrument. Allow the instrument to run for approximately one hour to fill the reagent lines.

6.1.3 Replace the analyzer tubing

Remaining tubing in the analyzer should be replaced annually.

The maintenance kit is available with the tubing harnesses assembled (6868800) or unassembled (6868900) If you have ordered the unassembled maintenance kit, use Figure 21 and Table 7 on page 41 to determine the tubing lengths and positions. When installing new tubing it is helpful to dip the ends in hot water before making the connections. It also is recommended that one tube at time be removed and replaced.

Numbers on the illustration correspond to the item numbers listed in the legend where the size, catalog number, and quantity also are given. The length given in Table 7 tells how long that particular tubing segment at a time should be; the operator must cut a piece to that length from a coil of the proper tubing.

The catalog number given for the tubing in the legend identifies the coil of tubing to cut the segment from and not the number of the segment itself.

DPD Reagent tubing may darken before the scheduled replacement time but that will not affect the performance of the instrument.

Table 8 gives information about the air purge, case drain, sample drain, and sample-in specifications and locations. Refer to Figure 21.

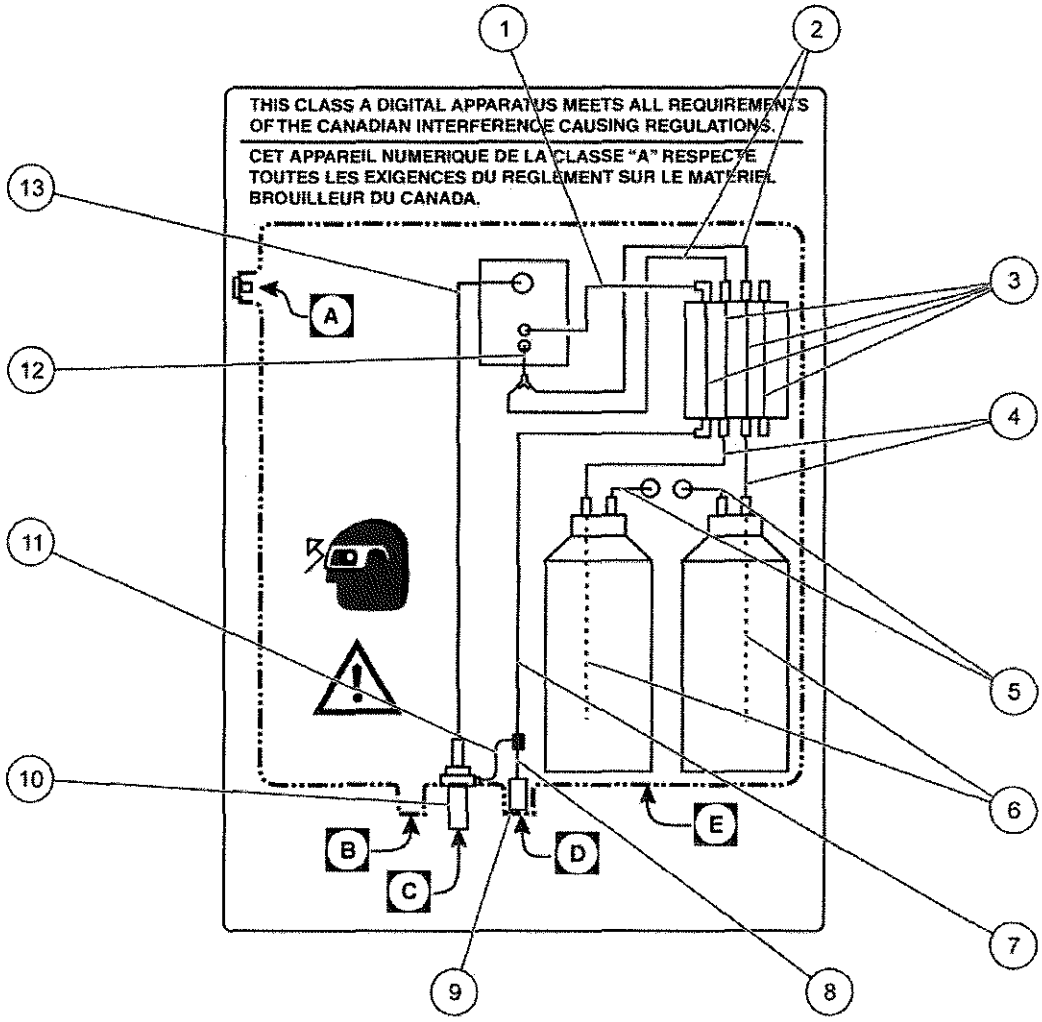

Figure 21 Plumbing diagram

Table 7 Replacement Tubing Lengths for Figure 21

Item	Description	Length (Qty)	From...	To...	Item Number
1	1/8" ID, 1/4" OD	4.5 inches (1)	Pump Body Out	Colorimeter	43293-00
2	1/32" ID, 3/32" OD	7.0 inches (2)	Pump Body Out	Y-Fitting	44253-00
3	1/16" ID, 3/32" OD	2.0 inches (4)	Pump Body In	Pump Body Out	42717-00
4	0.062 ID, 0.125" OD	6.0 inches (2)	Reagent Bottle Cap	Pump Body In	42076-00
5	0.062" ID, 0.125" OD	6.0 inches (2)	Reagent Bottle Cap	Reagent Vent Fitting	42076-00
6	1/32" ID, 3/32" OD	7.0 inches (2)	Reagent Bottle Bottom	Reagent Bottle Cap	45524-00
7	1/8" ID, 1/4" OD	7.0 inches (1)	Sample Bypass Tee	Pump Body In	43293-00
8	1/8" ID, 1/4" OD	1.5 inches	Sample Bypass Tee	Sample Inlet Fitting	43293-00
9	1/4" OD x 0.04 W, Black	varies (1)	Sample Conditioning Out	Case Fitting	30616-00
10	1/2" ID	varies (1)	Instrument Drain	Customer Drain	(not supplied)
11	1/32" ID, 3/32" OD	3 inches	Sample Bypass Tee	Drain fitting	44253-00
12	1/32" ID, 3/32" OD	1.0 inch (1)	Y-Fitting	Colorimeter	44253-00
13	0.500" ID, 11/16" OD	12 inches	Colorimeter	Drain Fitting	54108-00

Table 8 Drain, air purge, sample-in, and enclosure locations

A	Air purge, 0.01 CFM at 20 PSIG max, ¼ in. O.D. tube
B	Case drain, ½ in. I.D. tube
C	Sample drain, ½ in. I.D. tube
D	Sample in, 5 PSIG max, ¼ in. O.D. tube
E	Enclosure

6.2 Unscheduled maintenance

6.2.1 Fuse replacement

The T, 2.5A, 250V fuse used in this instrument is used for both 115V and 230V operation.

DANGER
Electrocution hazard. Remove power from the instrument when removing or installing a fuse.

DANGER
Fire hazard. For continued protection against fire, replace the fuse only with a fuse of the same type and rating.

Fuse replacement procedure:

1. Make sure there is no power supplied to the instrument. the instrument power switch does not remove power from the fuses, Power must be disconnected remotely to remove power from the fuses.
2. Remove the customer access cover.
3. Locate the fuse holders (near the terminal strip in the customer wiring compartment). Refer to Figure 13 on page 22.
4. Remove the two fuses (F1 and F2) and replace them with two new fuses with the same specifications (T, 2.5A, 250V). Refer to Parts and accessories on page 49.
5. Reinstall the customer access cover and resupply power.

6.2.2 Clean the instrument enclosure

With the enclosure securely latched, use a soft cloth and a mild detergent to wipe the outside of the enclosure. Do not allow moisture to enter the enclosure.

6.2.3 Clean the colorimeter

The colorimeter measuring cell may collect sediment or develop a film growth on the inside walls. Cleaning with an acid solution and a cotton swab on a monthly basis is recommended. Depending on sample conditions, it may be necessary to clean the cell more often.

CAUTION
Chemical exposure hazard. The chemicals used in this procedure may be hazardous if inappropriately handled or accidentally misused. Please read all warnings on the reagent labels. Protective eye wear is always recommended when contact with chemicals is possible.

Colorimeter cell cleaning procedure:

1. Press the **MENU** key, then press the down **ARROW** key until the **MAINT** menu appears. Press **ENTER**.
2. Press the down **ARROW** key to scroll to the **CLEAN** option. Press **ENTER**.
3. Refer to Figure 22 and locate the colorimeter.
4. Remove the rubber plug on the top of the colorimeter assembly.
5. Remove the magnetic stir bar using a bent steel paper clip as a retrieval tool. Refer to Figure 22.
6. Wait until **CLEAN** flashes on the status line of the display, then fill the colorimeter with 19.2 N Sulfuric Acid Standard Solution (203832).

Note: *Lower normality sulfuric acid will NOT be sufficient for cleaning the colorimeter.*

7. Allow the sulfuric acid to stand in the colorimeter for 15 minutes.
8. Insert a wooden or paper cotton-tipped swab* into the opening and move it up and down with a gentle scrubbing action, cleaning the interior surfaces of the colorimeter cell. Clean the stir bar with the cotton swab (Figure 23).
9. Install the stir bar.
10. Replace the rubber plug on the top of the colorimeter assembly and make sure the cover is on the viewing port of the colorimeter.
11. Press the **EXIT** key to immediately return to normal operation; the instrument will return to normal operation automatically after 60 minutes.

*Do not use a plastic swab when cleaning the colorimeter with sulfuric acid. The the acid will dissolve the plastic.

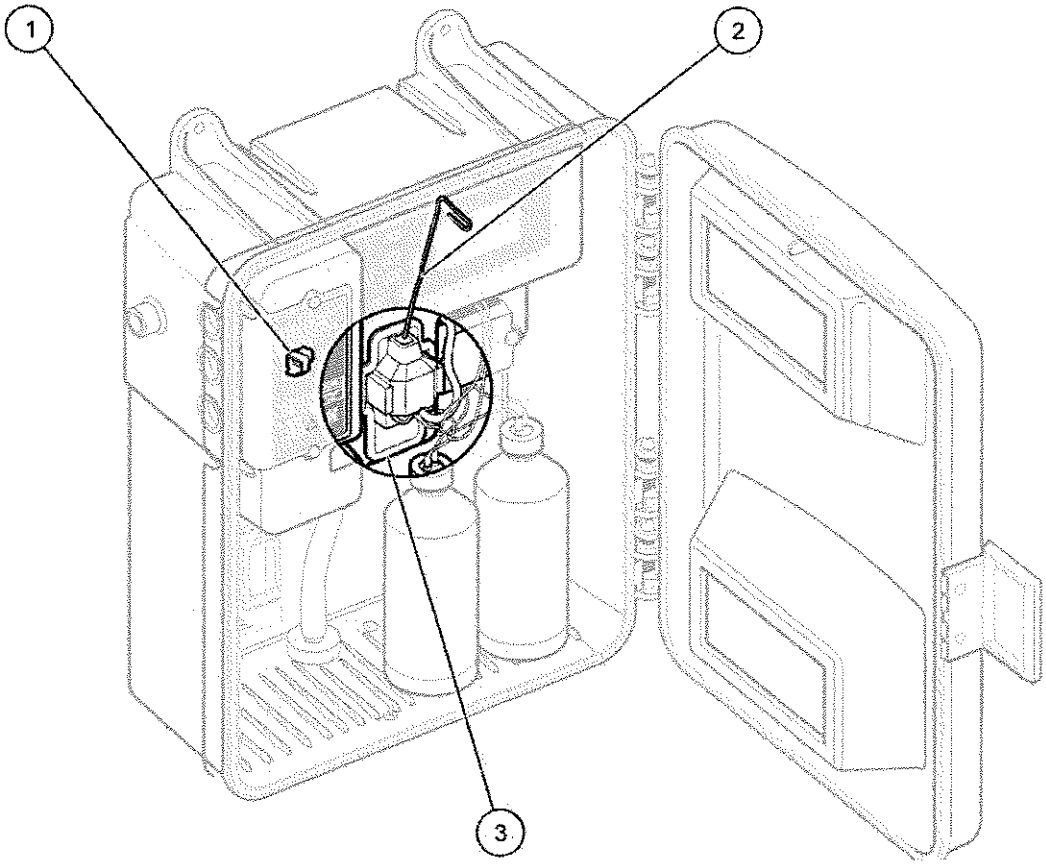

Figure 22 Removing the stir bar

1	Remove the plug from the top hole of the colorimeter.	**3**	Colorimeter assembly
2	Gently insert a straightened paper clip into the hole at the top of the colorimeter and slowly pull out the stir bar.		

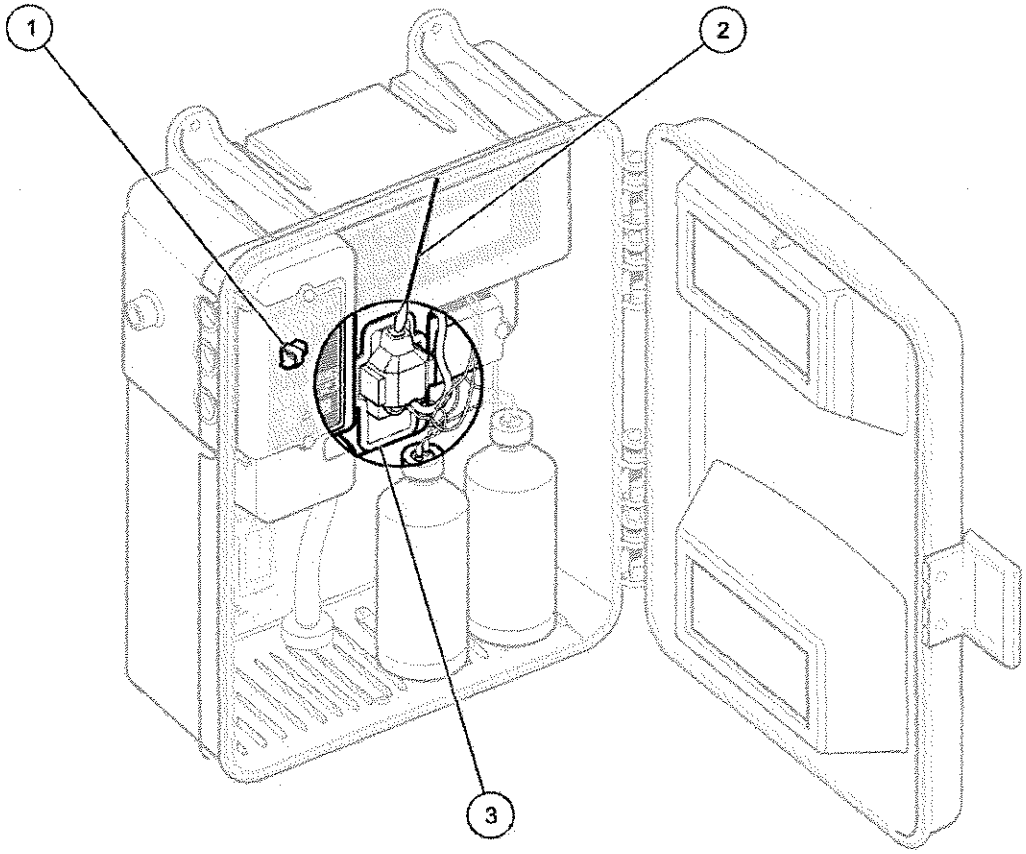

Figure 23 Cleaning the colorimeter

1	Remove the plug from the top hole of the colorimeter	3	Colorimeter assembly
2	Gently scrub the inside of the colorimeter with a cotton-tipped swab		

6.2.4 Replace the sample conditioning filter

To insert the filter into the housing:

1. Isolate the filter by turning the valves on each side to OFF.
2. Unscrew the top of the filter housing. Refer to Figure 7 on page 16.
3. Insert the filter element and push until it stays in place.
4. Replace the filter housing top.

6.2.5 Reagent spill clean up

Wipe up spills with a clean, disposable wipe and discard according to applicable Federal, State, and Local regulations.

Section 7 Troubleshooting

In the event the instrument should malfunction, the following troubleshooting guide may be used to help isolate the problem. Please contact the nearest Service Center for assistance or shipping instructions if the instrument must be returned.

7.1 Troubleshooting guide

Table 9 supplies troubleshooting information for the instrument. After determining the symptom and probable cause, perform the corrective action steps in the order given.

Table 9 Troubleshooting guide

Symptom	Probable Cause	Corrective Action
Display does not light and the pump motor is not operating	No operating power	Check power switch position, fuses, and power cord connections.
Display does not light and the pump motor operates.	Problem with power supply	Replace the main circuit board.
Display lights and the pump motor does not operate.	Low operating power	Verify the line voltage is within specifications.
	Incorrect line voltage selector switch setting	Check the line voltage selector switch position.
	Motor cable not connected to the circuit board	Check the motor cable connection.
	Defective motor	Replace motor.
Zero reading	No Stir Bar	Place Stir Bar into Colorimeter
	Pinch Plate thumb screws are not fully tightened.	Tighten the thumb screws.
	Sample is not flowing to the instrument.	Check the sample conditioning and other sample supply lines.
	More than one stir bar	Remove the plug from the top of the colorimeter and use a flashlight to illuminate the inside of the cell. Look into the colorimeter to determine if more than one stir bar is inside. Remove excess stir bars.
Sample is overflowing from the colorimeter	Drain line clogged or air lock in drain line	Clean drain line and/or eliminate air lock from drain plumbing.
Excessive moisture is condensing on the colorimeter	Temperature differential between sample and analyzer environment is too large.	When practical, allow the sample temperature to warm to room temperature before it enters the analyzer.
Low reading	Clogged tubing	Replace the tubing

7.2 System alarms

An alarm message is displayed and the instrument ceases to function normally when a System Alarm is activated. Resolve the alarm to resume normal operation.

Table 10 System alarms

Alarm	What the Alarm Indicates	Alarm Display and Instrument Indication	Resolution
EE Error	Inability to write to the EE ROM	**EE ERROR**	Press the **EXIT** key to restart the instrument. If the problem recurs, the main circuit board may need to be replaced. Call Hach Service.
A2D Error	Reference measurement = 0 A/D counts Indicates that the colorimeter is reading zero light throughput. So it is likely the photo detector/analog to digital converter is faulty.	**A/D ERROR - EXIT TO RESTART** Alarm LED is lit	Press the **EXIT** key to restart the instrument. If the problem recurs, there is a problem with the colorimeter. The connector between the instrument and the colorimeter may not be making a proper connection. Remove the colorimeter, inspect the connector pins and straighten the pins if necessary. Reinstall the colorimeter. If the problem remains, replace the colorimeter.
LED Failure	The colorimeter's photo detector is reading an extremely low level of light for the reference reading (less than 100 A/D counts).	**LED ERROR - EXIT TO RESTART** Alarm LED is lit	Press the **EXIT** key to restart the instrument. If the problem recurs clean the sample cell. If the problem is not yet resolved, remove the plug from the colorimeter's sample viewing port. You should be able to observe a green light. (You must wait several minutes from instrument turn on for the light to come on.) It will remain on continuously thereafter. If the light does not come on and the colorimeter has just been removed and re-inserted, the colorimeter connector is not making a proper connection. Remove the colorimeter and inspect the connector pins. If the pins are bent, straighten them and reinsert the colorimeter. If the problem still remains, replace the colorimeter. Contact Hach Service.
Motor Failure	Indicates that the pump motor's home position flag was not detected.	**MOTOR ERROR - EXIT TO RESTART** Alarm LED is lit	Press the **EXIT** key to restart the instrument. If the problem recurs, check the following. If the motor does not turn when the instrument is turned on, try the following: **1** Check that the motor is plugged into the main circuit board. **2** Replace the motor. **3** Replace the main circuit board. If the motor does run and the motor coupler is turning, try the following: **1** Check that the optical switch is properly plugged into the main circuit board and the switch is properly located in the chassis. **2** Replace the optical switch. **3** Replace the main circuit board.
SCR Error	The Cycle Motor does not turn off at the appropriate time, resulting in a short total cycle time.	**SCR ERROR - EXIT TO RESTART** Alarm LED is lit	Press the **EXIT** key to restart the instrument. If the problem recurs, replace the main circuit board.

7.3 System warnings

Recall active warnings using the **RECALL WARNINGS** function in the alarm menu. To clear the warnings use the **CLEAR WARNINGS** function in the alarm menu.

Table 11 System warnings

Warning	What the Alarm Indicates	Alarm Display and Instrument Indication	Resolution
POWER	Power failed. In default condition, this warning is disabled.	**POWER**	Inspect wiring and circuit breakers that deliver power to the CL17.
Low Signal	Reference measurement is less than 2000 A/D counts.	**LOWSIG**	Clean sample cell Replace sample cell
Marginal Gain	A calibration resulted in a gain correction factor greater than 1.1 or less than 0.9. The calibration standard and the value that the operator is attempting to input do not match. Re-test the calibration standard and perform a new calibration on the CL17.	**MARG G**	Set CAL Defaults. Verify standard value. Recalibrate the instrument.
Marginal Zero	A calibration resulted in an offset correction factor greater than 0.2 and less than 0.5.	**MARG Z**	Set CAL Defaults. Verify zero value. Recalibrate the instrument.
Marginal Offset	A high offset count was measured with the LED off. Usually caused by light leaks.	**MARG 0**	Verify the colorimeter end caps are firmly screwed in place. Check for light leaks.

Section 8 Parts and accessories

Description	Quantity	Item Number
Circuit Board Assembly, main	each	5440400
Colorimeter Module	each	6867000
Colorimeter Plug	each	6868500
Connector for Alarm or Recorder	each	4458200
Cam/Coupler Assembly	each	5445200
Follower Block, Reagent	each	4274100
Follower Block Sample	each	4274200
Fuse, (T, 2.5 A, 250V) UL/CSA/CE accepted, 2 needed	each	4952600
Installation Kit	each	5516402
Maintenance Kit	each	5444300
Maintenance Kit, preassembled	each	5444301
Motor Assembly	each	5444600
Pressure Plate	each	5411800
Screen, 40-mesh, Replacement for Sample Conditioning	each	5418400
Stir Bar, Micro	each	6865600
Thumb Screw, to hold Pressure Plate	2	5410100
Optional Accessories		
Flow Meter with 1/4-inch OD tubing	each	4643600
Power Cord kit with strain relief, 115V, North American Operation	each	5448800
Power Cord Kit with strain relief, 240V, European Operation	each	5448900
Reagents		
Reagent Kit for Free Chlorine Testing	each	2556900
Includes:		
Free Chlorine Buffer Solution	—	2314111
Free Chlorine Indicator Solution	—	2314011
DPD Indicator Powder	—	2297255
Reagent Kit for Total Chlorine Testing	each	2557000
Includes:		
Total Chlorine Buffer Solution	—	2263511
Total Chlorine Indicator Solution	—	2263411
DPD Indicator Powder	—	2297255
6" cotton cleaning swabs	5/pkg 100/pkg	2522905 2554300

Section 9 Contact information

HACH Company
World Headquarters
P.O. Box 389
Loveland, Colorado
80539-0389 U.S.A.
Tel (800) 227-HACH
(800) -227-4224
(U.S.A. only)
Fax (970) 669-2932
orders@hach.com
www.hach.com

Repair Service in the United States:
HACH Company
Ames Service
100 Dayton Avenue
Ames, Iowa 50010
Tel (800) 227-4224
(U.S.A. only)
Fax (515) 232-3835

Repair Service in Canada:
Hach Sales & Service
Canada Ltd.
1313 Border Street, Unit 34
Winnipeg, Manitoba
R3H 0X4
Tel (800) 665-7635
(Canada only)
Tel (204) 632-5598
Fax (204) 694-5134
canada@hach.com

Repair Service in Latin America, the Caribbean, the Far East, Indian Subcontinent, Africa, Europe, or the Middle East:
Hach Company World
Headquarters,
P.O. Box 389
Loveland, Colorado,
80539-0389 U.S.A.
Tel +001 (970) 669-3050
Fax +001 (970) 669-2932
intl@hach.com

HACH LANGE GMBH
Willstätterstraße 11
D-40549 Düsseldorf
Tel. +49 (0)2 11 52 88-320
Fax +49 (0)2 11 52 88-210
info@hach-lange.de
www.hach-lange.de

HACH LANGE LTD
Pacific Way
Salford
GB-Manchester, M50 1DL
Tel. +44 (0)161 872 14 87
Fax +44 (0)161 848 73 24
info@hach-lange.co.uk
www.hach-lange.co.uk

HACH LANGE LTD
Unit 1, Chestnut Road
Western Industrial Estate
IRL-Dublin 12
Tel. +353(0)1 460 2522
Fax +353(0)1 450 9337
info@hach-lange.ie
www.hach-lange.ie

HACH LANGE GMBH
Hütteldorfer Str. 299/Top 6
A-1140 Wien
Tel. +43 (0)1 912 16 92
Fax +43 (0)1 912 16 92-99
info@hach-lange.at
www.hach-lange.at

HACH LANGE GMBH
Rorschacherstrasse 30a
CH-9424 Rheineck
Tel. +41 (0)848 55 66 99
Fax +41 (0)71 886 91 66
info@hach-lange.ch
www.hach-lange.ch

HACH LANGE FRANCE S.A.S.
8, mail Barthélémy Thimonnier
Lognes
F-77437 Marne-La-Vallée
cedex 2
Tél. +33 (0) 820 20 14 14
Fax +33 (0)1 69 67 34 99
info@hach-lange.fr
www.hach-lange.fr

HACH LANGE NV/SA
Motstraat 54
B-2800 Mechelen
Tel. +32 (0)15 42 35 00
Fax +32 (0)15 41 61 20
info@hach-lange.be
www.hach-lange.be

DR. LANGE NEDERLAND B.V.
Laan van Westroijen 2a
NL-4003 AZ Tiel
Tel. +31(0)344 63 11 30
Fax +31(0)344 63 11 50
info@hach-lange.nl
www.hach-lange.nl

HACH LANGE APS
Åkandevej 21
DK-2700 Brønshøj
Tel. +45 36 77 29 11
Fax +45 36 77 49 11
info@hach-lange.dk
www.hach-lange.dk

HACH LANGE AB
Vinthundsvägen 159A
SE-128 62 Sköndal
Tel. +46 (0)8 7 98 05 00
Fax +46 (0)8 7 98 05 30
info@hach-lange.se
www.hach-lange.se

HACH LANGE S.R.L.
Via Rossini, 1/A
I-20020 Lainate (MI)
Tel. +39 02 93 575 400
Fax +39 02 93 575 401
info@hach-lange.it
www.hach-lange.it

HACH LANGE S.L.U.
Edificio Seminario
C/Larrauri, 1C- 2ª Pl.
E-48160 Derio/Vizcaya
Tel. +34 94 657 33 88
Fax +34 94 657 33 97
info@hach-lange.es
www.hach-lange.es

HACH LANGE LDA
Av. do Forte nº8
Fracção M
P-2790-072 Carnaxide
Tel. +351 214 253 420
Fax +351 214 253 429
info@hach-lange.pt
www.hach-lange.pt

HACH LANGE SP. ZO.O.
ul. Krakowska 119
PL-50-428 Wrocław
Tel. +48 801 022 442
Zamówienia: +48 717 177 707
Doradztwo: +48 717 177 777
Fax +48 717 177 778
info@hach-lange.pl
www.hach-lange.pl

HACH LANGE S.R.O.
Zastrčená 1278/8
CZ-141 00 Praha 4 - Chodov
Tel. +420 272 12 45 45
Fax +420 272 12 45 46
info@hach-lange.cz
www.hach-lange.cz

HACH LANGE S.R.O.
Roľnícka 21
SK-831 07 Bratislava – Vajnory
Tel. +421 (0)2 4820 9091
Fax +421 (0)2 4820 9093
info@hach-lange.sk
www.hach-lange.sk

HACH LANGE KFT.
Vöröskereszt utca. 8-10.
H-1222 Budapest XXII. ker.
Tel. +36 1 225 7783
Fax +36 1 225 7784
info@hach-lange.hu
www.hach-lange.hu

HACH LANGE S.R.L.
Str. Căminului nr. 3,
et. 1, ap. 1, Sector 2
RO-021741 București
Tel. +40 (0) 21 205 30 03
Fax +40 (0) 21 205 30 17
info@hach-lange.ro
www.hach-lange.ro

HACH LANGE
8, Kr. Sarafov str.
BG-1164 Sofia
Tel. +359 (0)2 963 44 54
Fax +359 (0)2 866 15 26
info@hach-lange.bg
www.hach-lange.bg

HACH LANGE SU ANALİZ SİSTEMLERİ LTD.ŞTİ.
Ilkbahar mah. Galip Erdem
Cad. 616 Sok. No:9
TR-Oran-Çankaya/ANKARA
Tel. +90312 490 83 00
Fax +90312 491 99 03
bilgi@hach-lange.com.tr
www.hach-lange.com.tr

Contact information

HACH LANGE D.O.O.
Fajfarjeva 15
SI-1230 Domžale
Tel. +386 (0)59 051 000
Fax +386 (0)59 051 010
info@hach-lange.si
www.hach-lange.si

HACH LANGE E.Π.E.
Αυλίδος 27
GR-115 27 Αθήνα
Τηλ. +30 210 7777038
Fax +30 210 7777976
info@hach-lange.gr
www.hach-lange.gr

HACH LANGE D.O.O.
Ivana Severa bb
HR-42 000 Varaždin
Tel. +385 (0) 42 305 086
Fax +385 (0) 42 305 087
info@hach-lange.hr
www.hach-lange.hr

HACH LANGE MAROC SARLAU
Villa 14 – Rue 2 Casa Plaisance
Quartier Racine Extension
MA-Casablanca 20000
Tél. +212 (0)522 97 95 75
Fax +212 (0)522 36 89 34
info-maroc@hach-lange.com
www.hach-lange.ma

Section 10 Certification

10.1 FCC PART 15, Class "A" Limits

Supporting test records by Hewlett Packard, Fort Collins, Colorado Hardware Test Center (A2LA # 0905-01) and certified compliance by Hach Company.

This device complies with Part 15 of the FCC Rules. Operation is subject to the following two conditions:

(1) this device may not cause harmful interference, and (2) this device must accept any interference received, including interference that may cause undesired operation.

Changes or modifications to this unit not expressly approved by the party responsible for compliance could void the user's authority to operate the equipment.

This equipment has been tested and found to comply with the limits for a Class A digital device, pursuant to Part 15 of the FCC Rules. These limits are designed to provide reasonable protection against harmful interference when the equipment is operated in a commercial environment. This equipment generates, uses, and can radiate radio frequency energy and, if not installed and used in accordance with the instruction manual, may cause harmful interference to radio communications. Operation of this equipment in a residential area is likely to cause harmful interference, in which case the user will be required to correct the interference at his own expense. The following techniques of reducing the interference problems are applied easily.

1. Disconnect the CL17 Chlorine Analyzer from its power source to verify that it is or is not the source of the interference.
2. If the CL17 Chlorine Analyzer is connected into the same outlet as the device with which it is interfering, try another outlet.
3. Move the CL17 Chlorine Analyzer away from the device receiving the interference.
4. Reposition the receiving antenna for the device receiving the interference.
5. Try combinations of the above.

Appendix A Network Interface Card

The CL17 analyzer can be purchased with a Network Interface Card. This allows the analyzer to be attached via the AquaTrend® software to one master AquaTrend Interface, one Serial Input/Output (SIO) Module, one Signal Output Module (SOM) with two relays and one recorder output, and two MOD I/Os. Remote AquaTrends and Digital Display Modules are not supported. Refer to the *AquaTrend Interface Instruction Manual* for complete details on configuring the Hach network.

1. Route a Hach-approved network cable to the CL17 Analyzer. Route the network cable through the middle wiring access hole in the CL17 housing. (This hole is also used for routing Recorder output wiring.) Use appropriate hardware to maintain the NEMA 4X and IP66 ratings.
2. Strip the ends of the network cable. Strip back the wire insulation ¼ inch as shown in Figure 24.
3. Insert each bare wire end into the 3-pin connector using the information in Table 12. Make sure the wire insulation is seated against the connector. Do not leave any bare wire exposed.
4. Plug the terminated cable into J1 on the Interface Card.
5. Reattach the access panel to the instrument enclosure with the two screws.
6. Reapply power to the CL17 Analyzer.

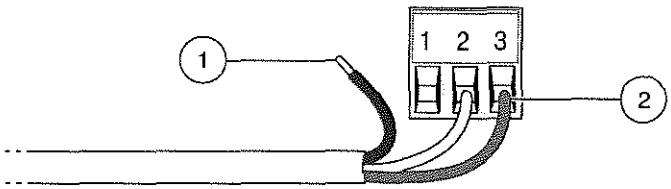

Figure 24 Proper wire preparation

Table 12

Position	Signal	Wire color
1	NET_A	White
2	NET_B	Green
3	GND	Shield

A.1 Attach the analyzer to the network using an AquaTrend interface

1. Make network connections from the CL17 Analyzer to the AquaTrend Network. It is recommended to make connections at the junction box. Be certain to connect the cable shield.
2. From the Master AquaTrend Interface add the CL17 Analyzer to the network:
   a. Press the **MENU** key and select **NETWORK MENU.**
   b. Select **ADD DEVICE.** The AquaTrend display will show the instrument name and version number.
   c. When the display prompts **ADD DEVICE**, press **ENTER**. The AquaTrend display will show **CL17 CONFIGURING DEVICE. PLEASE WAIT.**
   d. After the sensor is added to the network a message will be displayed with the name of the sensor. Press **ENTER** to accept the displayed sensor name. Press the **MENU** key to return to the main menu.

A.2 Adding the measurement to a channel

The measurement from the CL17 Analyzer must be associated with a channel on the AquaTrend Interface so the measurement will be shown on the AquaTrend display. Attach the measurement to a channel as follows:

3. Select **AQUATREND MENU** and press the **ENTER** key.
4. Select **DISPLAY SETUP** and press **ENTER**.
5. Select **MEASUREMENT TO CHANNEL** and press **ENTER**.
6. Select **ATTACH** and press **ENTER**.
7. Select a available channel on the AquaTrend and press **ENTER**.
8. Press **ENTER** again to select **ATTACH TO CL17.**
9. Press the **MENU** key to return to the AquaTrend main display. The reading will be displayed and updated every 2.5 seconds.

A.3 Alarms and warnings

If an alarm or warning condition exists at the CL17 Analyzer, the alarm or warning will be indicated at the AquaTrend via the alarm annunciator. The actual alarm or warning must be viewed and resolved at the CL17 Analyzer. The CL17 Analyzer alarms and recorder outputs can also be connected to a Signal Output Module. Please refer to the *Signal Output Module Manual.*

A.4 Logging data using the serial input/output module

The CL17 Analyzer sends the chlorine reading (in ppm) to a SIO on the network, if one is present. The service diagnostic data must be disabled before outputting data to the SIO:

1. Press the **MENU** key then the **DOWN ARROW** key until **SETUP** is displayed.
2. Press **ENTER**.
3. Press **ENTER** when **DIAG OUTPUT** is displayed.
4. Use the up or **DOWN ARROW** key to toggle the selection between **ON** and **OFF** then press **ENTER** to select the displayed option. Press the **EXIT** key to return to the measurement display.

The format of the data is illustrated below, where n is the SIO channel number for the CL17. (The channel number (1–8) is assigned based on the order in which devices were added to the network.) Please refer to the AquaTrend Interface Manual for information on determining the channel number.

Note: *In the following commands, n signifies the channel number.*

[n]3.00,<CR><LF><NULL>

Additional diagnostic strings will be present if service diagnostics is enabled. These diagnostics are for service personnel only.

A.5 Manually polling data

Note: *Refer to the Signal Input/Output (SIO) Manual for additional information on communicating with the SIO.*

Data is normally sent out (polled) every 2½ minutes. The automatic polling function cannot be modified but the system can be manually polled as follows:

Enter the following to enable manual polling mode: nRMR1

Enter the following to receive the latest reading: nRMR?

To return to automatic polling mode enter the following: nRMR0

A.6 Using the signal output module

Refer to the *Signal Output Manual* (Cat. No. 5125018) to configure up to two relays and one 4–20 mA outputs. The relays and recorder output mirror the outputs of the relays and recorders internal to the CL17.

A.7 Logging data using the MOD I/O module

Measurement and alarm data from the CL17 Analyzer can be converted to a Modbus®* protocol using the Hach MOD I/O Module. The data can then be polled by any Modbus Master Device (PLC/DCS) including the Hach OPC server/OPC data logger. Refer to the *MOD I/O Module Manual* for additional information.

The CL17 Analyzer has the following setup information for the MOD I/O Module:

Number of Integer Measurements	1
Number of Floating-point Measurements	1
Number of Alarms	2
Sensor ID	8

*Modbus is a registered trademark of Modicon Corporation.

Chapter 2.8

Technical Literature - ORP Analyzer

DATA SHEET
PH/REDOX ELECTRODES
PRO140 / LZX545, PRO140PT100 / LZX546,
LZY023, LZY027, LZY028

pH/redox electrodes for immersion and in-line applications

- → **Glass electrodes for special requirements and high-precision measurements**
- → **For all measurements in drinking water, waste water and industrial process water**
- → **Mounting in flow, immersion and retractable fitting with Pg13.5 threads**
- → **Wide range of applications thanks to varying pressure and temperature ranges**

HACH LANGE

UNITED FOR WATER QUALITY

Technical data

	PH ELECTRODE				REDOX ELECTRODE
Model / order no.	**Pro140 / LZX545**	**Pro140Pt100 / LZX546**	**LZY023**	**LZY027**	**LZY028**
Application area	Food and beverage industry, fermentation, CIP and SIP applications		Drinking water, wastewater and process water		All applications
Measuring range	pH 0 ... 14		pH 2 ... 13		-2,000 .... +2,000 mV
Temperature range	-5 °C ... +135 °C		0 °C .... +100 °C		-5 °C ... +100 °C
Pressure range	34 bar at 25 °C		10 bar		10 bar
Response time $t_{98\%}$	10 secs.		<30 secs.		
Sterilizable	Yes		No		No
Electrolyte	Saturated KCl		Polymer with visible KCl reserve		Polymer with visible KCl reserve
Refillable			No		
Reference electrode			Ag/AgCl		
Diaphragm	Double-ring diaphragm (porous Teflon)		Annular gap	Hole diaphragm	Annular gap
Electrode shaft material			Glass		
Sensor material		Glass			Platinum disc
Temperature sensor	None	Pt100 integrated	None	Pt1000 integrated	None
Dimensions			See Drawings		
Weight			Approx. 0.15 kg		
Shaft length			120 mm		
Shaft diameter			12 mm		
Process connection			Pg13.5 thread		
Cable connection	TOP 68 plug connector		S7 plug connector	SMEK plug connector	VP plug connector

Subject to change without notice.

Drawings

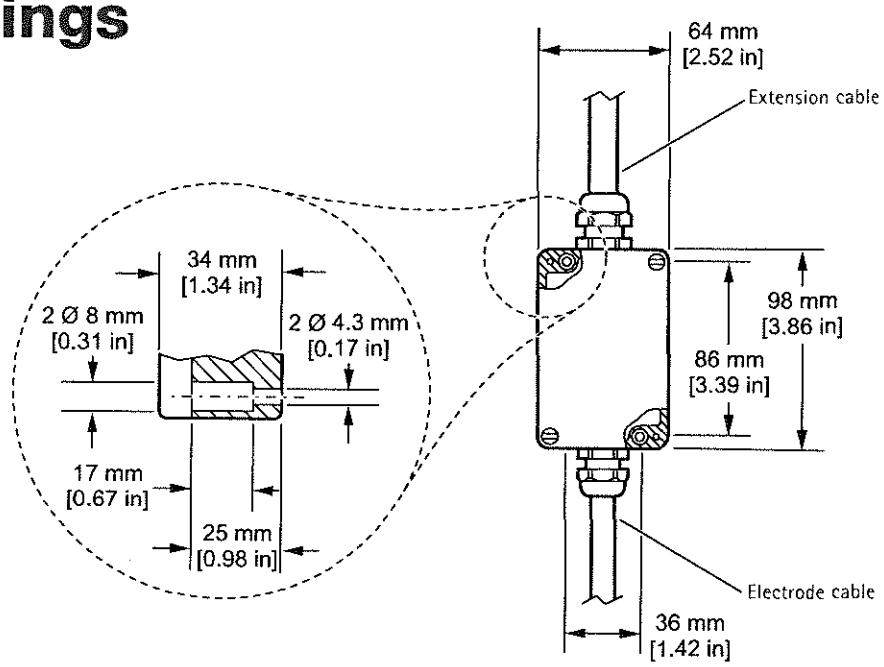

Drawing: connection box for cable extension

Drawings

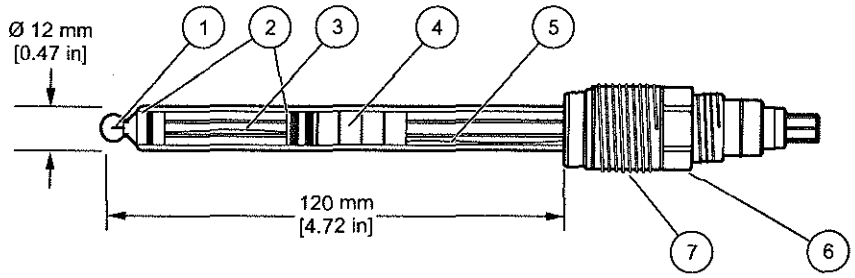

pH electrode Pro140 /
pH electrode Pro140Pt100

1 Measuring electrode
2 Double-ring diaphragm
3 Temperature sensor (only for Pro140Pt100)
4 Salt rings
5 Reference electrode
6 TOP 68 plug connector
7 Pg13.5 thread

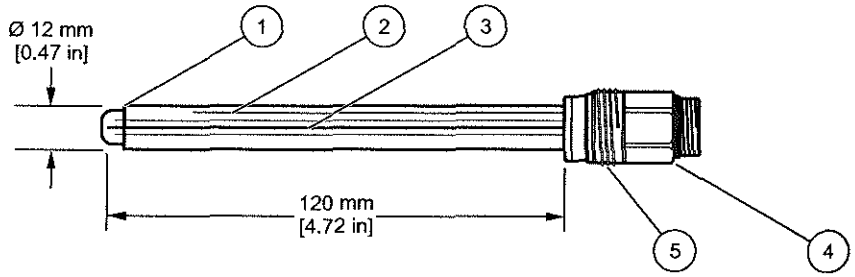

pH electrode LZY023

1 Annular gap diaphragm
2 Reference electrode
3 Measuring electrode
4 S7 plug connector
5 Pg13.5 thread

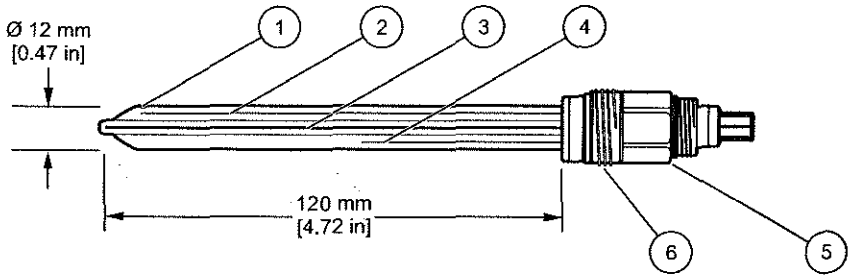

pH electrode LZY027

1 Hole diaphragm
2 Temperature sensor
3 Measuring electrode
4 Reference electrode
5 SMEK plug connector
6 Pg13.5 thread

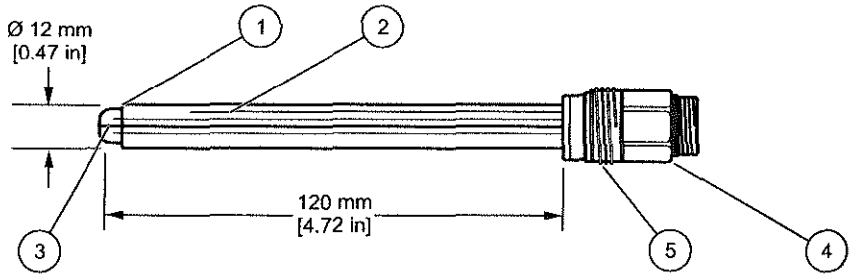

Redox electrode LZY028

1 Annular gap diaphragm
2 Reference electrode
3 Platinum disc (measuring electrode)
4 S7 plug connector
5 Pg13.5 thread

Ordering information

ELECTRODES

Designation	Order number
Pro140	LZX545
Pro140Pt100	LZX546
pH electrode	LZY023
pH electrode with Pt1000	LZY027
Redox electrode	LZY028

ACCESSORIES

Designation	Order number
Plug/cable combination type S7 for LZY023 and LZY028, 3 m	Z359016,10110
Plug/cable combination type S7 for LZY023 and LZY028, 5 m	LZY037
Plug/cable combination type S7 for LZY023 and LZY028, 10 m	Z359016,10120
Plug/cable combination type S7 for LZY023 and LZY028, 20 m	Z359016,10122
Plug/cable combination type SMEK for LZY027, 5 m Tmax 130 °C (1 coaxial, 4-wire), open end	LZY021
Plug/cable combination type SMEK for LZY027, 10 m Tmax 130 °C (1 coaxial, 4-wire), open end	LZY581
Plug/cable combination type SMEK for LZY027, 20 m Tmax 130 °C (1 coaxial, 4-wire), open end	LZY582
Plug/cable combination type TOP68 for LZX545 and LZX546, 5 m	LZX548
Plug/cable combination type TOP68 for LZX545 and LZX546, 10 m	LZX516
Connection box for cable extension for cable lengths < 25 m 5 terminals plus external shielding Aluminum epoxy coated Protection class IP65	Z08350-A-8500
4-wire shielded coaxial cable type 2654, order per meter	Z358048,00000

Subject to change without notice.

OPTIONAL ACCESSORIES

SINGLET buffer solutions

Hermetically sealed in individual bags and color-coded; 25 mL each*

Designation	Description	Quantity	Order number
pH 7.00 and pH 10.01	Yellow + blue	2 x 10 pieces	2769820
pH 4.01 and pH 7.00	Red + yellow	2 x 10 pieces	2769920
pH 4.01	Red	20 pieces	2770020
pH 7.00	Yellow	20 pieces	2770120
pH 10.01	Blue	20 pieces	2770220

* Buffer traceable to NIST standard reference material, accuracy ±0.02 pH (25 °C); other concentrations available on request

pH reagents

Designation	Order number
Buffer solution pH=4.00, 500 mL	Z363130,00500
Buffer solution pH=6.88, 500 mL	Z363131,00500
Buffer solution pH=9.22, 500 mL	Z363132,00500

Redox reagents

Designation	Order number
200 mV solution, 500 mL	25M2A1001-115
600 mV solution, 500 mL	25M2A1002-115
200 mV solution, 4 L	25M2A1001-123
600 mV solution, 4 L	25M2A1002-123

DOC053.52.30093.Jul12

HACH LANGE LTD
Pacific Way
Salford
GB-Manchester, M50 1DL
Tel. +44 (0)161 8721487
Fax +44 (0)161 8487324
info@hach-lange.co.uk
www.hach-lange.co.uk

Phone: (0161) 872 14 87

HACH LANGE

UNITED FOR WATER QUALITY

Industries

- Municipal waste water
- Industrial waste water
- Drinking water
- Process water

SC 200 Digital 2 Channel Controller

One controller for 40+ sensors and 14 parameters
The digital 2-channel SC 200 Controller is compatible with our complete range of digital and analogue sensors. There are 40+ sensors to choose - from Ammonium to Turbidity as well as special parameters such as Oil in Water. The one-stop-shop controller and its family of sensors monitor processes for all applications in waste-water, drinking and process water. Standardisation on one controller reduces maintenance complexity, time and costs. Plus you only have one company to call - us.

Easy to extract data
To help you analyse and further improve your processes the SC 200 offers a new solution for simple data management. All logged measuring and diagnosis data can be easily extracted in XML format from the controller via the SD Card slot.

Easy to keep firmware up to date
A new legal regulation is only one of several reasons why instrumentation firmware must always be kept up to date. Aside from legal requirements we invest heavily to add new functionality, new parameters, new sensors etc. SC 200 makes this easy via the SD card slot.

One controller for all applications
HACH LANGE is the recognized leader for water analytic solutions. With the launch of the SC 200, more than 40 different analogue and digital plug & play sensors can now be combined. Due to its rugged and robust metal enclosure, the SC 200 is suitable for industrial applications virtually anywhere.

With the communication options PROFIBUS DP and MODBUS RS232 / RS485, the controller can be easily integrated into digital networks. The modular concept (one slot for a communication card of choice and two slots for input cards) makes the SC 200 stand out in terms of capability and flexibility.

SC 200 Digital 2-channel Controller

Technical Data Basic Instrument

Display
Graphic dot matrix LCD with LED backlighting

Display size
68 mm x 48 mm

Display resolution
240 x 160 pixels

Dimensions
144 mm x 144 mm x 181 mm

Weight
1.70 kg

Power requirements
100 to 240 V AC 10 %, 50/60 Hz
24 VDC -15 %/+ 20 %

Operating temperature
-20 to 60 °C , 0 to 95% RH non-condensing

Storage temperature
-20 to 70 °C , 0 to 95 % RH non-condensing

Analogue outputs
Two 0/4 to 20 mA isolated current outputs, max 550 Ω

Analogue outputs: Operational mode
Primary or secondary measurement, calculated value (dual channel only)

Analogue outputs: Functional mode
Linear, Logarithmic, Bi-linear, PID

Security levels
2

Material enclosures
Polycarbonate
Aluminium (powder coated)
Stainless Steel

Mounting configurations
Wall, Pole and Panel Mounting

Enclosure rating
NEMA4X / IP66

Relays
Four electromechanical SPDT (Form C) contacts, 1200 W, 5 A

Relays: Operational mode
Primary or secondary measurement, calculated value (dual channel only) or timer

Relays: Functional mode
Alarm, Timer, Feeder Control, PWM or Fm Control, System Alarm

Memory backup
Flash memory

Electrical certifications
EMC - Certified CE compliant for conducted and radiated emissions (EN 50081-2) and immunity (EN 61000-6-2); General purpose - UL through ETL

Warranty
2 years

Subject to change without notice.

SC 200 configuration variants

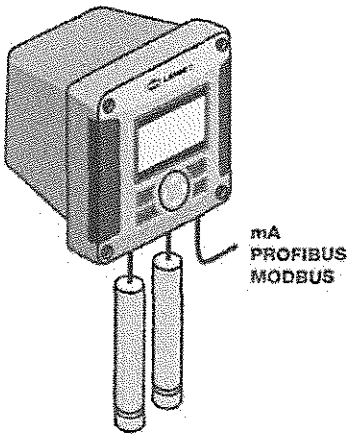

Variant 1: Fully digital - for max. two SC sensors, direct plug & play

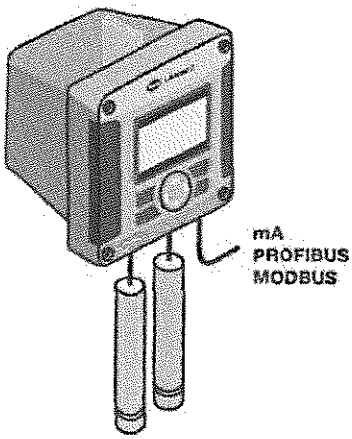

Variant 2: Combined version - one digital SC sensor and one analogue sensor with suitable sensor input card

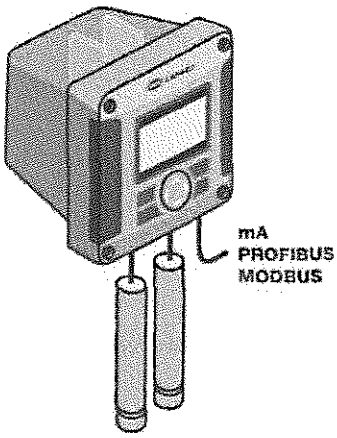

Variant 3: Fully analogue - for max. two analogue sensors plus their input cards

SC 200 Digital 2-channel Controller

Sensor input cards

Product description	SC 200 Sensor input card for analogue pH / ORP sensors (9012900)	SC 200 Sensor input card for analogue contacting conductivity sensors (9013000)	SC 200 Sensor input card for analogue inductive conductivity sensors (9013000)	SC 200 Sensor input card mA IN signals (9012800)
Measuring ranges pH	-2.0 to 14.0 pH -2.00 to 14.00 pH			
Measuring range ORP	-2100 to 2100 mV			
Measuring ranges conductivity		0 to 2.000 µS/cm 0 to 20.00 µS/cm 0 to 200.0 µS/cm 0 to 2000 µS/cm 0 to 2.000 mS/cm 0 to 20.00 mS/cm 0 to 200.0 mS/cm	0 to 200.0 µS/cm 0 to 2000 µS/cm 0 to 2.000 mS/cm 0 to 20.00 mS/cm 0 to 200.0 mS/cm 0 to 2000 mS/cm 0 to 2.000 S/cm	
Measuring ranges resistivity		0 to 19.99 MΩcm 0 to 999.9 kΩcm		
Measuring ranges concentration			0 to 99.99 % 0 to 200.0 %	
Measuring ranges TDS		0 to 9999 ppm 0 to 9999 ppb	0 to 9999 ppm	
Signal range				0 to 25 mA
Repeatability	± 0.1 % of range	0 to 20 µS/cm, K=1: ± 0.02 µS/cm 20 to 200,000 µS/cm, K=1: ± 0.1 % of reading	> 500 µS/cm: ± 0.5 % of reading < 500 µS/cm: ± 2.5 µS/cm	
Response times	0.5 s	0.5 s	1 s	
Temperature ranges	PT100 / PT1000 -20 to 200°C NTC300 -20 to 110 °C Manual -25 to 400 °C	-20 to 200 °C	-20 to 200 °C	
Temperature accuracy	± 0.5 °C	± 0.5 °C	± 0.5 °C	
Temperature drifts	± 0.03 % of reading / °C	> 20 µS/cm: ± 0.02 % of reading / °C	> 500 µS/cm: ± 0.02 % of reading / °C	
Temperature compensation	Automatic from -20 to 110°C or manual	Automatic from -20 to 200 °C or manual	Automatic from -20 to 200°C or manual	
Temperature sensors	PT100 / PT1000 / NTC300	PT100 / PT1000	PT1000	
Temperature compensation curves	Nernst, Pure Water: Ammonium, Morpholine, user defined (linear)	Linear, Ammonium, Natural Water, user defined, none	Linear, Natural Water, user defined, none. Available curves depend on the selected type of measurement (Conductivity, Concentration or TDS).	
Sensor to controller distances (maximal)	pHD sensor: 914 m pH combination electrode with pre-amplifier: 300 m pH combination electrode without pre-amplifier: 30 m (depending on environment this distance is shorter)	Max. length: 91 m	Full-scale value 200 to 2,000 µS/cm max. length: 61 m Full-scale value 2,000 to 2,000,000 µS/cm max. length: 91 m	
Concentration curves			H_3PO_4: 0-40% HCl: 0-18% HCl: 22-36% NaOH: 0-16% $CaCl_2$: 0-22% HNO_3: 0-28% HNO_3: 36-96% H_2SO_4: 0-30% H_2SO_4: 40-80%	
Calibration methods	2-point buffer (pH only) 1-point buffer (pH only) 2-point sample (pH only) 1-point sample (pH and ORP)	Zero GLI DRY-CAL 1-point sample	Zero 1-point Cond (or Concentration or TDS)	

Subject to change without notice.

SC 200 Digital 2-channel Controller

Parameters and applicable sensors

Parameters	Digital sensors
Ammonium	AMTAX sc
	AMTAX indoor sc
	NH4D sc
	AN-ISE sc
Chlorine	9184 sc
	CLF10 / CLT10 sc
Chlorine dioxide	9187 sc
Conductivity	3798-S sc
Dissolved oxygen	LDO
	5740 sc
Nitrate	NITRATAX clear sc
	NITRATAX plus sc
	NITRATAX eco sc
	NO3D sc
	AN-ISE sc
Oil in water	FP360 sc
Organics	UVAS sc
Ozone	9185 sc
pH/ORP	pHD sc
	1200-S sc
Phosphate	PHOSPHAX sc
	PHOSPHAX indoor sc
Sludge level	SONATAX sc
Suspended solids	TSS sc
	TSS HT sc
	TSS VARI sc
	TSS XL sc
	TSS Titan 2 sc
	TSS Titan 7 sc

Parameters	Digital sensors
Suspended solids/turbidity, high resolution	SOLITAX ts-line sc
	SOLITAX t-line sc
	SOLITAX hs-line sc
	SOLITAX inline sc
	SOLITAX highline sc
Turbidity, high resolution	SS7 sc
Turbidity, low resolution	ULTRATURB sc
	ULTRATURB plus sc
	1720E
Turbidity, ultra low resolution	FT660 sc

Parameters	Analogue sensors
Conductivity	GLI 3400 series
	GLI 3700 series
	POLYMETRON 831X series
pH/ORP	pHD
	pH combination electrodes

SC 200 configuration

Power supply
- **0** Without power cord
- **2** EU power cord
- **3** UK power cord
- **4** Swiss power cord
- **7** 24 VDC

Communications Output
- **0** 2 x 0/4-20mA Outputs
- **1** MODBUS 232 & 485
- **3** PROFIBUS DP

Sensor Input 1
- **5** Digital (all SC sensors)
- **1** Analogue: pH / ORP / DO
- **2** Analogue: Conductivity
- **4** mA Input

Sensor Input 2
- **0** None
- **5** Digital (all SC sensors)
- **1** Analogue: pH / ORP / DO
- **2** Analogue: Conductivity
- **4** mA Input

Important:
"Sensor Input 1" has to be bigger than the "Sensor Input 2" ID
- Example: Correct = LXV404.99.xx501,
Wrong = LXV404.99.xx051

L	X	V	4	0	4	.	9	9	.					1

DOC053.52.35003.Oct10

Subject to change without notice.

HACH LANGE LTD
Pacific Way
Salford
GB-Manchester, M50 1DL
Tel. +44 (0)161 8721487
Fax +44 (0)161 8487324
info@hach-lange.co.uk
www.hach-lange.co.uk

Phone: (0161) 872 14 87

HACH LANGE

UNITED FOR WATER QUALITY

Chapter 2.9

Technical Literature -

pH Analyzer

DATA SHEET
PH/REDOX ELECTRODES
PRO140 / LZX545, PRO140PT100 / LZX546,
LZY023, LZY027, LZY028

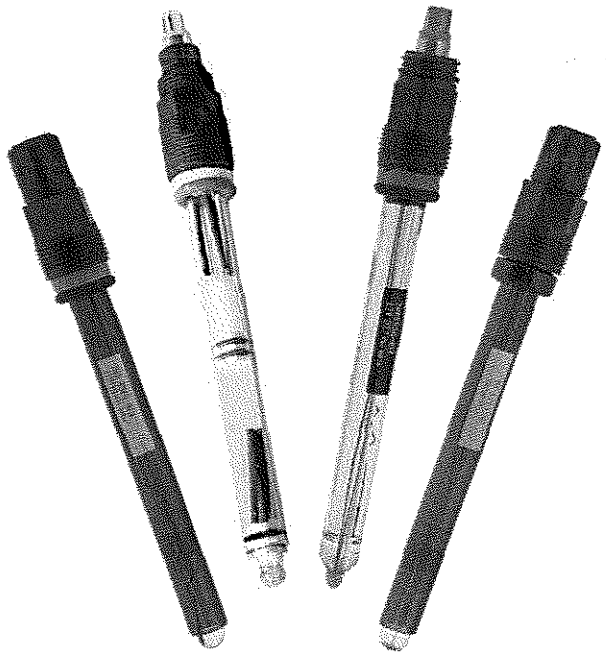

pH/redox electrodes for immersion and in-line applications

- → **Glass electrodes for special requirements and high-precision measurements**
- → **For all measurements in drinking water, waste water and industrial process water**
- → **Mounting in flow, immersion and retractable fitting with Pg13.5 threads**
- → **Wide range of applications thanks to varying pressure and temperature ranges**

HACH LANGE

UNITED FOR WATER QUALITY

Technical data

	PH ELECTRODE				REDOX ELECTRODE
Model / order no.	**Pro140 / LZX545**	**Pro140Pt100 / LZX546**	**LZY023**	**LZY027**	**LZY028**
Application area	Food and beverage industry, fermentation, CIP and SIP applications		Drinking water, wastewater and process water		All applications
Measuring range	pH 0 ... 14		pH 2 ... 13		-2,000 .... +2,000 mV
Temperature range	-5 °C .... +135 °C		0 °C .... +100 °C		-5 °C ... +100 °C
Pressure range	34 bar at 25 °C		10 bar		10 bar
Response time $t_{98\%}$	10 secs.		<30 secs.		
Sterilizable	Yes		No		No
Electrolyte	Saturated KCl		Polymer with visible KCl reserve		Polymer with visible KCl reserve
Refillable			No		
Reference electrode			Ag/AgCl		
Diaphragm	Double-ring diaphragm (porous Teflon)		Annular gap	Hole diaphragm	Annular gap
Electrode shaft material			Glass		
Sensor material		Glass			Platinum disc
Temperature sensor	None	Pt100 integrated	None	Pt1000 integrated	None
Dimensions			See Drawings		
Weight			Approx. 0.15 kg		
Shaft length			120 mm		
Shaft diameter			12 mm		
Process connection			Pg13.5 thread		
Cable connection	TOP 68 plug connector		S7 plug connector	SMEK plug connector	VP plug connector

Subject to change without notice.

Drawings

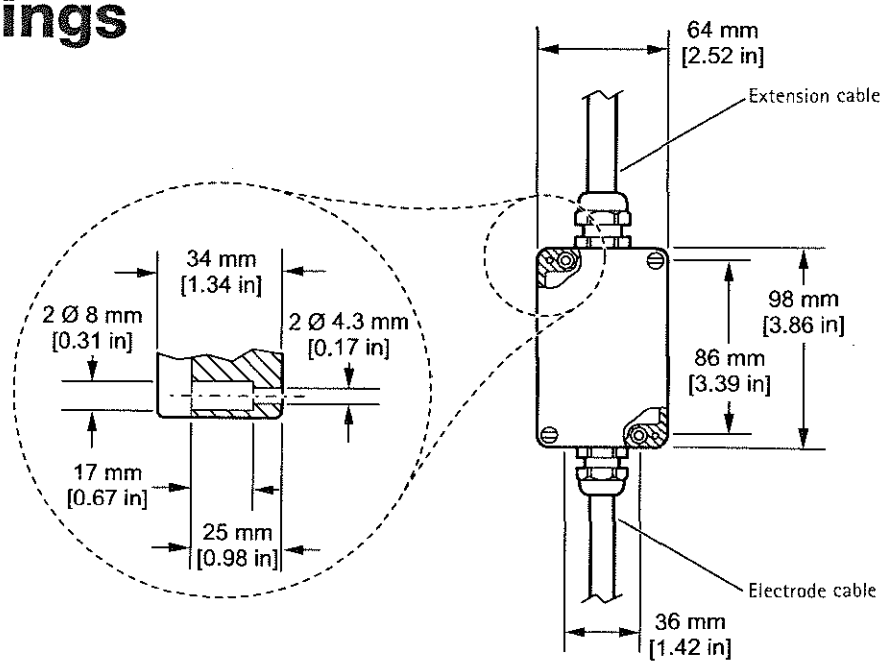

Drawing: connection box for cable extension

Drawings

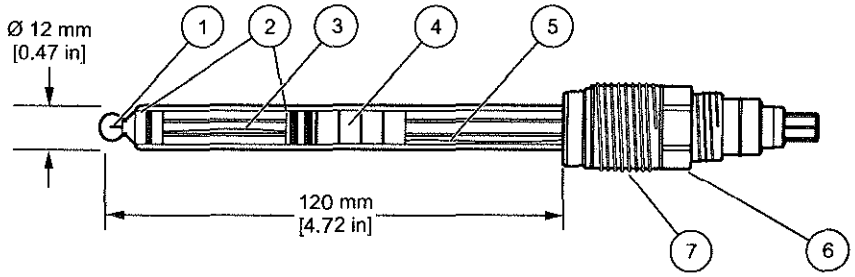

pH electrode Pro140 /
pH electrode Pro140Pt100

1 Measuring electrode
2 Double-ring diaphragm
3 Temperature sensor (only for Pro140Pt100)
4 Salt rings
5 Reference electrode
6 TOP 68 plug connector
7 Pg13.5 thread

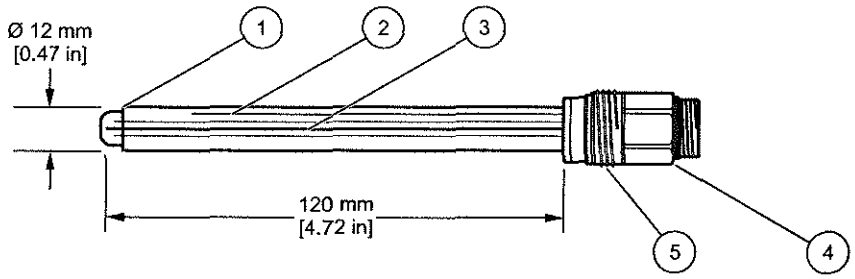

pH electrode LZY023

1 Annular gap diaphragm
2 Reference electrode
3 Measuring electrode
4 S7 plug connector
5 Pg13.5 thread

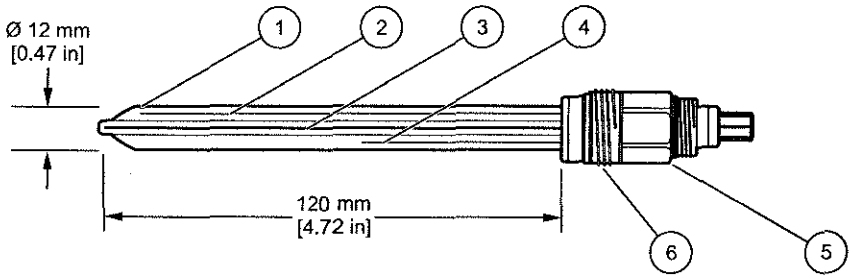

pH electrode LZY027

1 Hole diaphragm
2 Temperature sensor
3 Measuring electrode
4 Reference electrode
5 SMEK plug connector
6 Pg13.5 thread

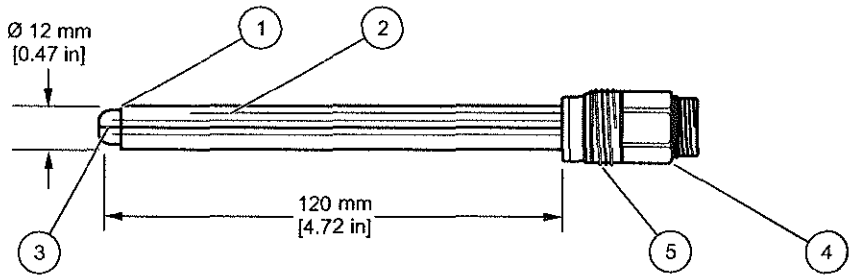

Redox electrode LZY028

1 Annular gap diaphragm
2 Reference electrode
3 Platinum disc (measuring electrode)
4 S7 plug connector
5 Pg13.5 thread

Ordering information

ELECTRODES

Designation	Order number
Pro140	LZX545
Pro140Pt100	LZX546
pH electrode	LZY023
pH electrode with Pt1000	LZY027
Redox electrode	LZY028

ACCESSORIES

Designation	Order number
Plug/cable combination type S7 for LZY023 and LZY028, 3 m	Z359016,10110
Plug/cable combination type S7 for LZY023 and LZY028, 5 m	LZY037
Plug/cable combination type S7 for LZY023 and LZY028, 10 m	Z359016,10120
Plug/cable combination type S7 for LZY023 and LZY028, 20 m	Z359016,10122
Plug/cable combination type SMEK for LZY027, 5 m Tmax 130 °C (1 coaxial, 4-wire), open end	LZY021
Plug/cable combination type SMEK for LZY027, 10 m Tmax 130 °C (1 coaxial, 4-wire), open end	LZY581
Plug/cable combination type SMEK for LZY027, 20 m Tmax 130 °C (1 coaxial, 4-wire), open end	LZY582
Plug/cable combination type TOP68 for LZX545 and LZX546, 5 m	LZX548
Plug/cable combination type TOP68 for LZX545 and LZX546, 10 m	LZX516
Connection box for cable extension for cable lengths < 25 m 5 terminals plus external shielding Aluminum epoxy coated Protection class IP65	Z08350=A=8500
4-wire shielded coaxial cable type 2654, order per meter	Z358048,00000

Subject to change without notice.

OPTIONAL ACCESSORIES

SINGLET buffer solutions

Hermetically sealed in individual bags and color-coded; 25 mL each*

Designation	Description	Quantity	Order number
pH 7.00 and pH 10.01	Yellow + blue	2 x 10 pieces	2769820
pH 4.01 and pH 7.00	Red + yellow	2 x 10 pieces	2769920
pH 4.01	Red	20 pieces	2770020
pH 7.00	Yellow	20 pieces	2770120
pH 10.01	Blue	20 pieces	2770220

* Buffer traceable to NIST standard reference material, accuracy ±0.02 pH (25 °C); other concentrations available on request

pH reagents

Designation	Order number
Buffer solution pH=4.00, 500 mL	Z363130,00500
Buffer solution pH=6.88, 500 mL	Z363131,00500
Buffer solution pH=9.22, 500 mL	Z363132,00500

Redox reagents

Designation	Order number
200 mV solution, 500 mL	25M2A1001-115
600 mV solution, 500 mL	25M2A1002-115
200 mV solution, 4 L	25M2A1001-123
600 mV solution, 4 L	25M2A1002-123

DOC053.52.90093.Jul12

HACH LANGE LTD
Pacific Way
Salford
GB-Manchester, M50 1DL
Tel. +44 (0)161 8721487
Fax +44 (0)161 8487324
info@hach-lange.co.uk
www.hach-lange.co.uk

Phone: (0161) 872 14 87

HACH LANGE

UNITED FOR WATER QUALITY

TECHNICAL DATA
ELECTRO CHEMISTRY
DIFFERENTIAL PH AND ORP

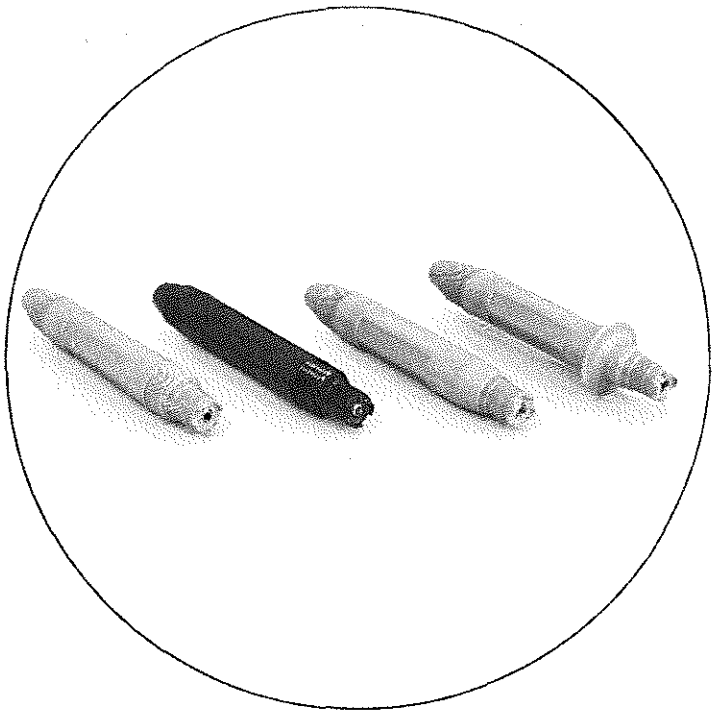

pHD sc Digital Diferrential PH and ORP Sensors

HACH LANGE

UNITED FOR WATER QUALITY

Ordering Information

pHD sc Digital Differential pH/ORP Sensors

All digital sensors include built-in digital electronics and integral 10 m cable terminated with connector for the sc100 digital controller. Body styles:

- Convertible – 1-inch NPT threads at both ends, designed for tee-mounting or other flow through mountings, and pipe mounting for immersion
- Insertion – no threads on the electrode end, designed for use with insertion valve assembly
- Sanitary – 2-inch flange for a tri-clover style fitting
- Immersion – used with chain mounting or pipe mounting

pH Sensors

Product Number	Body Material	Body Style	Electrode Material	Max Temp
DPD1P1.99	PEEK[1]	Convertible	Glass, General Purpose	70°C
DPD1P3.99	PEEK[1]	Convertible	Glass, HF-resistant	70°C
DPD2P1.99	PEEK[1]	Insertion	Glass, General Purpose	70°C
DPD3P1.99	PEEK[1]	Sanitary	Glass, General Purpose	70°C
DPD1R1.99	Ryton[2]	Convertible	Glass, General Purpose	70°C
DPD1R3.99	Ryton[2]	Convertible	Glass, HF-resistant	70°C

[1]Polyetheretherketone [2]Polyphenelene Sulfide

ORP Sensors

Product Number	Body Material	Body Style	Electrode Material	Max Temp
DRD1P5.99	PEEK[1]	Convertible	Platinum	70°C
DRD1P6.99	PEEK[1]	Convertible	Gold	70°C
DRD2P5.99	PEEK[1]	Insertion	Platinum	70°C
DRD1R5.99	Ryton[2]	Convertible	Platinum	70°C
DRD1R6.99	Ryton[2]	Convertible	Gold	70°C

[1]Polyetheretherketone [2]Polyphenelene Sulfide

Digital Gateway

6120500.99 ADpHD Digital Gateway, convert pHD analog sensors to digital output for connecting to sc100 digital controller

pHD Analog Sensors

All analog sensors include built-in preamplifier and integral 4.5 m cable terminated with stripped and tinned wires.

Definitions of body styles:

- Convertible – 1-inch NPT threads at both ends, designed for tee-mounting or other flow through mountings, and pipe mounting for immersion
- Insertion – has no threads on the electrode end, designed for use with insertion valve assembly
- Sanitary – has a 2-inch flange for a Tri-Clover style fitting

pH Sensors

Product Number	Body Material	Body Style	Electrode Material	Max Temp
PD1P1.99	PEEK[1]	Convertible	Glass, General Purpose	95°C
PD1P3.99	PEEK[1]	Convertible	Glass, HF-resistant	95°C
PD2P1.99	PEEK[1]	Insertion	Glass, General Purpose	95°C
PD3P1.99	PEEK[1]	Sanitary	Glass, General Purpose	95°C
PD1R1.99	Ryton[2]	Convertible	Glass, General Purpose	95°C
PD1R3.99	Ryton[2]	Convertible	Glass, HF-resistant	95°C

[1]Polyetheretherketone [2]Polyphenelene Sulfide

ORP Sensors

Product Number	Body Material	Body Style	Electrode Material	Max Temp
RD1P5.99	PEEK[1]	Convertible	Platinum	95°C
RD1P6.99	PEEK[1]	Convertible	Gold	95°C
RD2P5.99	PEEK[1]	Insertion	Platinum	95°C
RD1R5.99	Ryton[2]	Convertible	Platinum	95°C
RD1R6.99	Ryton[2]	Convertible	Gold	95°C

[1]Polyetheretherketone [2]Polyphenelene Sulfide

Dimensions

Convertible Style

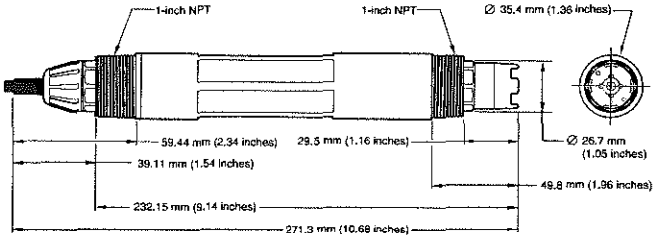

Insertion Style

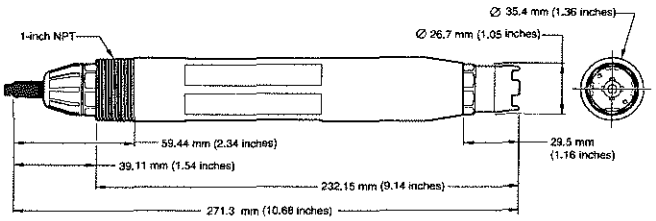

Sanitary Style

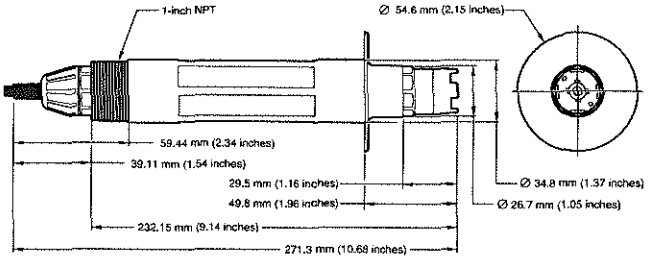

Immersion Style

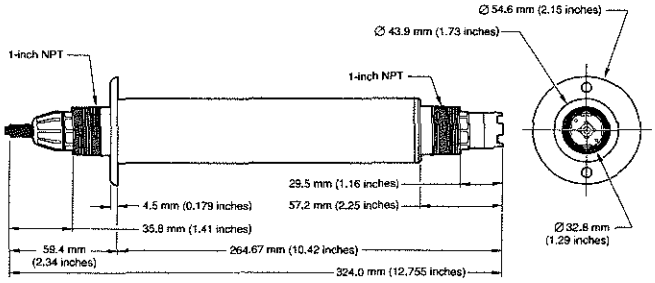

Digital Gateway

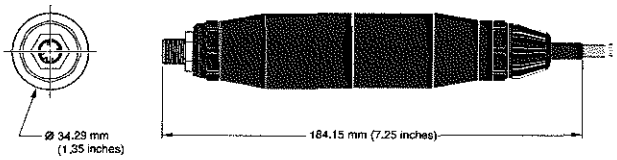

Analog Convertible Style

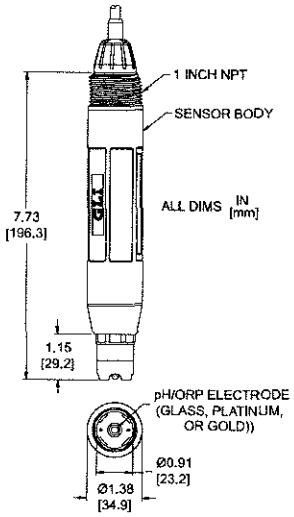

Analog Insertion Style

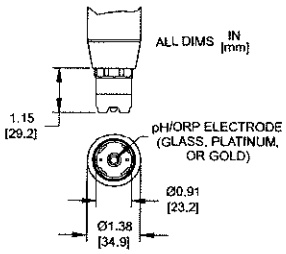

Analog Sanitary Style

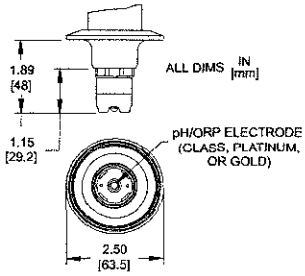

Specifications

pH Sensors

Most pH applications fall in the 2.5 to12.5 pH range. A Hach Lange pHD sc Differential pH sensor with the wide-range glass process electrode performs exceptionally well in this range. Some industrial applications require accurate measurement and control below 2 or above 12 pH. In these special cases, please contact Hach Technical Support for further details.

Measuring Range
-2 to 14 pH

Sensitivity
± 0.01 pH

Stability
0.03 pH per 24 hours, non-cumulative

Operating Temperature
Digital Sensor: -5 to 70°C
Analog Sensor with Digital Gateway: -5 to 105°C
Immersion Sensor: 0 to 50°C

Flow Rate
3 m per second, maximum

Sensor Pressure/Temperature Limits
Digital: 6.9 bar at 70°C
Analog: 6.9 bar at 105°C

Built-in Temperature Element
NTC 300 ohm thermistor for automatic temperature compensation and analyzer temperature readout

Transmission Distance
100 m, maximum
1000 m, maximum when used with a termination box

Sensor Cable (integral)
4 conductor cable with one shield and polyurethane jacket; rated to 105°C; 10 m standard length

Wetted Materials
PEEK® or Ryton® (PVDF), salt bridge of matching material with Kynar® junction, glass process electrode, titanium ground electrode, and Viton® O-ring seals

(pH sensor with optional HF-resistant glass process electrode has 316 stainless steel ground electrode, and perfluoroelastomer wetted O-rings; consult factory for other available wetted O-ring materials)

ORP (Redox) Sensors

For best ORP measuring results in solutions containing zinc, cyanide, cadmium or nickel, Hach recommends using the pHD sc ORP sensor equipped with an optional gold electrode.

Measuring Range
-1500 to +1500 mV

Sensitivity
± 0.5 mV

Stability
2 mV per 24 hours, non-cumulative

Operating Temperature
Digital Sensor: -5 to 70°C
Analog Sensor with Digital Gateway: -5 to 105°C
Immersion Sensor: 0 to 50°C

Flow Rate
3 m (10 ft.) per second, maximum

Sensor Pressure/Temperature Limits
Digital: 6.9 bar at 70°C
Analog: 6.9 bar at 105°C

Built-in Temperature Element
NTC 300 ohm thermistor for analyzer temperature readout only—no automatic temperature compensation necessary for ORP measurement

Transmission Distance
100 m, maximum
1000 m, maximum when used with a termination box

Sensor Cable (integral)
4 conductor cable with one shield and polyurethane jacket; rated to 105°C; 10 m standard length

Wetted Materials
PEEK® or Ryton® (PVDF), salt bridge of matching material with Kynar® junction, glass and platinum (or plastic and gold) process electrode, titanium ground electrode, and Viton® O-ring seals

*Specifications subject to change without notice.

Mounting Hardware

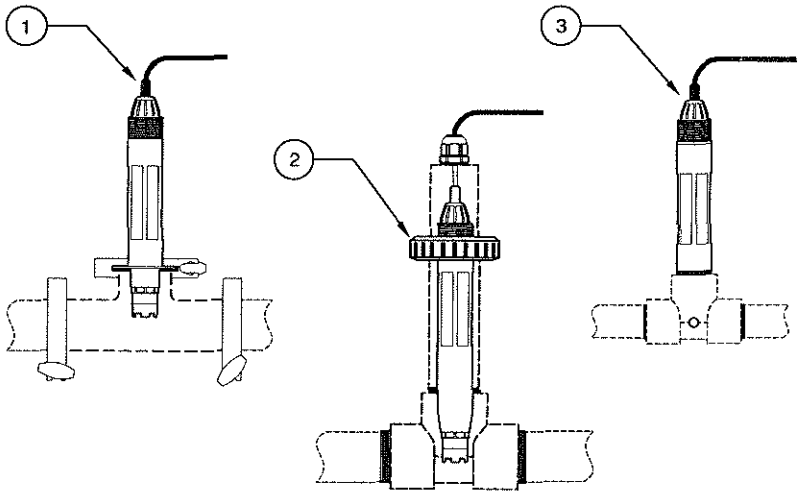

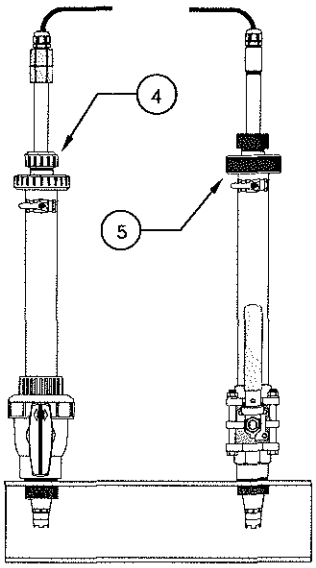

Sanitary Mount (1)
MH018S8SZ 316 SS
Includes 2-inch sanitary tee and heavy-duty clamp. Special cap and EPDM compound gasket are supplied with sensor but can be separately ordered.

Union Mount (2)
61313-00 CPVC
61314-00 316 SS
Includes standard 1-1/2 inch tee, special union pipe with adapter, sealing hub, and lock ring in respective material, and Viton® O-ring.

Flow-through Mount (3)
MH334N4NZ CPVC
MH314N4MZ 316 SS
Includes a standard 1-inch tee in respective material.

Insertion Mount (4) + (5)

Digital		Analog	
61367-00	CPVC	**MH736M4MZ**	CPVC
61368-00	316 SS	**MH716M4MZ**	316 SS

Includes a 1-1/2 inch ball valve in respective material, 1-1/2 inch NPT close nipple, sensor adapter with two Viton® O-rings and wiper, extension pipe, pipe adapter, back tube, and lock ring.

Immersion Mount
See seperate Technical Datasheet for Immersion Mounting Hardware.

ELECTRO CHEMISTRY
DIFFERENTIAL PH AND ORP

DOC 053.52.00013.Jun04

DR. BRUNO LANGE
GMBH & CO. KG
Willstätterstraße 11
D-40549 Düsseldorf
Tel. +49 (0)2 11 52 88-0
Fax +49 (0)2 11 52 88-143
info@hach-lange.de
www.hach-lange.com

HACH LANGE LTD
Lennox Road
Basingstoke
Hampshire, RG22 4AP
Tel. +44 (0)1256 33 34 03
Fax +44 (0)1256 33 07 24
info@hach-lange.co.uk
www.hach-lange.com

HACH LANGE

UNITED FOR WATER QUALITY

HACH LANGE

UNITED FOR WATER QUALITY

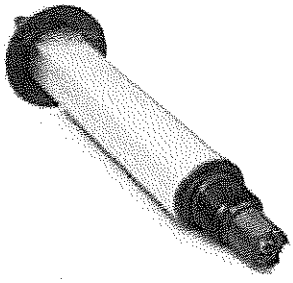

pHD sc: digital differential electrode for pH

pHD sc Digital pH sensor, insertion style 1", PEEK, 10m cable

Order number: DPD2P1.99

Due to the closed design, the reference system of this pH electrode does not come into contact with the fluid. The much less soil sensitive salt bridge reduces the necessary cleaning.

- Longer service life
- 2 year phased warranty*
- Plug and play with SC controllers
- Reliability with Built-in Encapsulated Preamp
- Patented Technology

It is less cleaning in comparison with systems fitted with membranes. The dilution of the electrolyte is prevented and the sensor gets long service life. The sensor runs with SC 200 and SC 1000 controller.

pH measurement performance certified according to MCERTs regulation.

Technical Specifications

Accuracy	± 0.02 pH
Cable Length	10 m PUR (polyurethane) 4-conductor with one shield, rated to 105°C
Calibration method	Two point automatic, one point automatic, two point manual, one point manual.
Communication	MODBUS
Diameter	34 mm
Dimensions (D x L)	34 mm x 175 mm
Drift	0.03 pH per 24 hours, non-cumulative
Flow	max. 3 m
Length	175 mm
Material	Titanium

Measuring range	-2.0 - 14.0 pH
Mounting style	Insertion
Operating temperature range	-5 - 70 °C
Pressure range	max. 10.7 bar Sensor only (pressure range of mounting hardware to be checked separately)
Repeatability	± 0.05 pH
Sensor Thread	NPT at both ends
Temperature compensation	automatic with NTC 300 ohm thermistor, or manually fixed at a user-entered temperature
Temperature sensor	NTC 300 Ω thermistor for automatic temperature compensation and analyser temperature readout
Weight	316 g
Weight	0.145 kg

Subject to change without notice.

HACH LANGE LTD
Pacific Way
Salford
GB-Manchester, M50 1DL
Tel. +44 (0)161 8721487
Fax +44 (0)161 8487324
info@hach-lange.co.uk
www.hach-lange.co.uk

Industries

- Municipal waste water
- Industrial waste water
- Drinking water
- Process water

SC 200 Digital 2 Channel Controller

One controller for 40+ sensors and 14 parameters
The digital 2-channel SC 200 Controller is compatible with our complete range of digital and analogue sensors. There are 40+ sensors to choose - from Ammonium to Turbidity as well as special parameters such as Oil in Water. The one-stop-shop controller and its family of sensors monitor processes for all applications in waste-water, drinking and process water. Standardisation on one controller reduces maintenance complexity, time and costs. Plus you only have one company to call - us.

Easy to extract data
To help you analyse and further improve your processes the SC 200 offers a new solution for simple data management. All logged measuring and diagnosis data can be easily extracted in XML format from the controller via the SD Card slot.

Easy to keep firmware up to date
A new legal regulation is only one of several reasons why instrumentation firmware must always be kept up to date. Aside from legal requirements we invest heavily to add new functionality, new parameters, new sensors etc. SC 200 makes this easy via the SD card slot.

One controller for all applications
HACH LANGE is the recognized leader for water analytic solutions. With the launch of the SC 200, more than 40 different analogue and digital plug & play sensors can now be combined. Due to its rugged and robust metal enclosure, the SC 200 is suitable for industrial applications virtually anywhere.

With the communication options PROFIBUS DP and MODBUS RS232 / RS485, the controller can be easily integrated into digital networks. The modular concept (one slot for a communication card of choice and two slots for input cards) makes the SC 200 stand out in terms of capability and flexibility.

SC 200 Digital 2-channel Controller

Technical Data Basic Instrument

Display
Graphic dot matrix LCD with LED backlighting

Display size
68 mm x 48 mm

Display resolution
240 x 160 pixels

Dimensions
144 mm x 144 mm x 181 mm

Weight
1.70 kg

Power requirements
100 to 240 V AC 10 %, 50/60 Hz
24 VDC -15 %/+ 20 %

Operating temperature
-20 to 60 °C , 0 to 95% RH non-condensing

Storage temperature
-20 to 70 °C , 0 to 95 % RH non-condensing

Analogue outputs
Two 0/4 to 20 mA isolated current outputs, max 550 Ω

Analogue outputs: Operational mode
Primary or secondary measurement, calculated value (dual channel only)

Analogue outputs: Functional mode
Linear, Logarithmic, Bi-linear, PID

Security levels
2

Material enclosures
Polycarbonate
Aluminium (powder coated)
Stainless Steel

Mounting configurations
Wall, Pole and Panel Mounting

Enclosure rating
NEMA4X / IP66

Relays
Four electromechanical SPDT (Form C) contacts, 1200 W, 5 A

Relays: Operational mode
Primary or secondary measurement, calculated value (dual channel only) or timer

Relays: Functional mode
Alarm, Timer, Feeder Control, PWM or Fm Control, System Alarm

Memory backup
Flash memory

Electrical certifications
EMC - Certified CE compliant for conducted and radiated emissions (EN 50081-2) and immunity (EN 61000-6-2); General purpose - UL through ETL

Warranty
2 years

Subject to change without notice.

SC 200 configuration variants

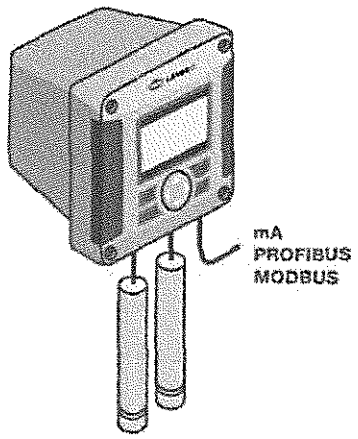

Variant 1: Fully digital - for max. two SC sensors, direct plug & play

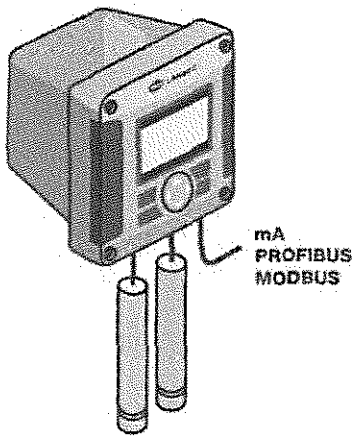

Variant 2: Combined version - one digital SC sensor and one analogue sensor with suitable sensor input card

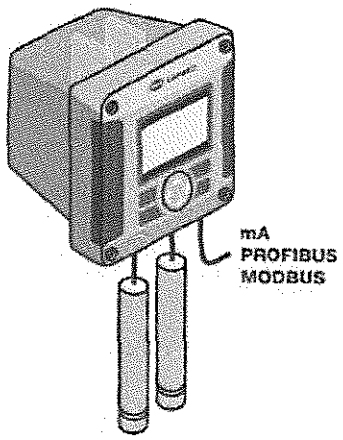

Variant 3: Fully analogue - for max. two analogue sensors plus their input cards

SC 200 Digital 2-channel Controller

Sensor input cards

Product description	SC 200 Sensor input card for analogue pH / ORP sensors (9012900)	SC 200 Sensor input card for analogue contacting conductivity sensors (9013000)	SC 200 Sensor input card for analogue inductive conductivity sensors (9013000)	SC 200 Sensor input card mA IN signals (9012800)
Measuring ranges pH	-2.0 to 14.0 pH -2.00 to 14.00 pH			
Measuring range ORP	-2100 to 2100 mV			
Measuring ranges conductivity		0 to 2.000 µS/cm 0 to 20.00 µS/cm 0 to 200.0 µS/cm 0 to 2000 µS/cm 0 to 2.000 mS/cm 0 to 20.00 mS/cm 0 to 200.0 mS/cm	0 to 200.0 µS/cm 0 to 2000 µS/cm 0 to 2.000 mS/cm 0 to 20.00 mS/cm 0 to 200.0 mS/cm 0 to 2000 mS/cm 0 to 2.000 S/cm	
Measuring ranges resistivity		0 to 19.99 MΩcm 0 to 999.9 kΩcm		
Measuring ranges concentration			0 to 99.99 % 0 to 200.0 %	
Measuring ranges TDS		0 to 9999 ppm 0 to 9999 ppb	0 to 9999 ppm	
Signal range				0 to 25 mA
Repeatability	± 0.1 % of range	0 to 20 µS/cm, K=1: ± 0.02 µS/cm 20 to 200,000 µS/cm, K=1: ± 0.1 % of reading	> 500 µS/cm: ± 0.5 % of reading < 500 µS/cm: ± 2.5 µS/cm	
Response times	0.5 s	0.5 s	1 s	
Temperature ranges	PT100 / PT1000 -20 to 200°C NTC300 -20 to 110 °C Manual -25 to 400 °C	-20 to 200 °C	-20 to 200 °C	
Temperature accuracy	± 0.5 °C	± 0.5 °C	± 0.5 °C	
Temperature drifts	± 0.03 % of reading / °C	> 20 µS/cm: ± 0.02 % of reading / °C	> 500 µS/cm: ± 0.02 % of reading / °C	
Temperature compensation	Automatic from -20 to 110°C or manual	Automatic from -20 to 200 °C or manual	Automatic from -20 to 200°C or manual	
Temperature sensors	PT100 / PT1000 / NTC300	PT100 / PT1000	PT1000	
Temperature compensation curves	Nernst, Pure Water: Ammonium, Morpholine, user defined (linear)	Linear, Ammonium, Natural Water, user defined, none	Linear, Natural Water, user defined, none. Available curves depend on the selected type of measurement (Conductivity, Concentration or TDS).	
Sensor to controller distances (maximal)	pHD sensor: 914 m pH combination electrode with pre-amplifier: 300 m pH combination electrode without pre-amplifier: 30 m (depending on environment this distance is shorter)	Max. length: 91 m	Full-scale value 200 to 2,000 µS/cm max. length: 61 m Full-scale value 2,000 to 2,000,000 µS/cm max. length: 91 m	
Concentration curves			H_3PO_4: 0-40% HCl: 0-18% HCl: 22-36% NaOH: 0-16% $CaCl_2$: 0-22% HNO_3: 0-28% HNO_3: 36-96% H_2SO_4: 0-30% H_2SO_4: 40-80%	
Calibration methods	2-point buffer (pH only) 1-point buffer (pH only) 2-point sample (pH only) 1-point sample (pH and ORP)	Zero GLI DRY-CAL 1-point sample	Zero 1-point Cond (or Concentration or TDS)	

Subject to change without notice.

SC 200 Digital 2-channel Controller

Parameters and applicable sensors

Parameters	Digital sensors
Ammonium	AMTAX sc
	AMTAX indoor sc
	NH4D sc
	AN-ISE sc
Chlorine	9184 sc
	CLF10 / CLT10 sc
Chlorine dioxide	9187 sc
Conductivity	3798-S sc
Dissolved oxygen	LDO
	5740 sc
Nitrate	NITRATAX clear sc
	NITRATAX plus sc
	NITRATAX eco sc
	NO3D sc
	AN-ISE sc
Oil in water	FP360 sc
Organics	UVAS sc
Ozone	9185 sc
pH/ORP	pHD sc
	1200-S sc
Phosphate	PHOSPHAX sc
	PHOSPHAX indoor sc
Sludge level	SONATAX sc
Suspended solids	TSS sc
	TSS HT sc
	TSS VARI sc
	TSS XL sc
	TSS Titan 2 sc
	TSS Titan 7 sc

Parameters	Digital sensors
Suspended solids/turbidity, high resolution	SOLITAX ts-line sc
	SOLITAX t-line sc
	SOLITAX hs-line sc
	SOLITAX inline sc
	SOLITAX highline sc
Turbidity, high resolution	SS7 sc
Turbidity, low resolution	ULTRATURB sc
	ULTRATURB plus sc
	1720E
Turbidity, ultra low resolution	FT660 sc

Parameters	Analogue sensors
Conductivity	GLI 3400 series
	GLI 3700 series
	POLYMETRON 831X series
pH/ORP	pHD
	pH combination electrodes

SC 200 configuration

Power supply
- **0** Without power cord
- **2** EU power cord
- **3** UK power cord
- **4** Swiss power cord
- **7** 24 VDC

Communications Output
- **0** 2 x 0/4-20mA Outputs
- **1** MODBUS 232 & 485
- **3** PROFIBUS DP

Sensor Input 1
- **5** Digital (all SC sensors)
- **1** Analogue: pH / ORP / DO
- **2** Analogue: Conductivity
- **4** mA Input

Sensor Input 2
- **0** None
- **5** Digital (all SC sensors)
- **1** Analogue: pH / ORP / DO
- **2** Analogue: Conductivity
- **4** mA Input

Important:
"Sensor Input 1" has to be bigger than the "Sensor Input 2" ID
- Example: Correct = LXV404.99.xx501,
Wrong = LXV404.99.xx051

L	X	V	4	0	4	.	9	9	.					1

DOC053.52.35003.Oct10

Subject to change without notice.

HACH LANGE LTD
Pacific Way
Salford
GB-Manchester, M50 1DL
Tel. +44 (0)161 8721487
Fax +44 (0)161 8487324
info@hach-lange.co.uk
www.hach-lange.co.uk

Phone: (0161) 872 14 87

HACH LANGE

UNITED FOR WATER QUALITY

Chapter 2.10

Technical Literature - Turbidity Analyzer

PRODUCT INFORMATION
PROCESS ANALYSIS
1720E TURBIDIMETER SC

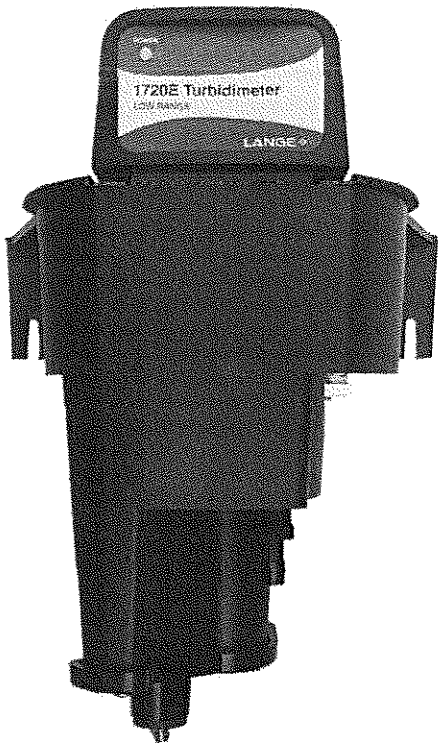

The new bypass sensor for low turbidities: 1720E sc

- **Optimised sensor technology for very low turbidities**
- **Interference-free due to patented bubble trap**
- **Can be combined with other probes as required using SC controller**
- **Plug and play with SC controllers**

1720E sc - further developed for clear media

The 1720E sc is the logical further development of the well-known, market-leading 1720 series of white light sensors that comply with the standard US-EPA 180.1. With a measuring range from 0.0001 NTU to 100 NTU, the 1720E sc is suitable for the measurement of clear to slightly turbid media. Its use facilitates optimal filtration management in municipal and industrial water treatment.

Easy to use and time-saving

The clever design means that cuvette cleaning is not necessary on the 1720E sc thus reducing maintenance and expensive downtimes.
Protracted interruptions during calibration and verification are also avoided by the use, for instance, of STABL CAL standard. All measured data are reliably and efficiently digitally processed in an SC controller.

HACH LANGE

UNITED FOR WATER QUALITY

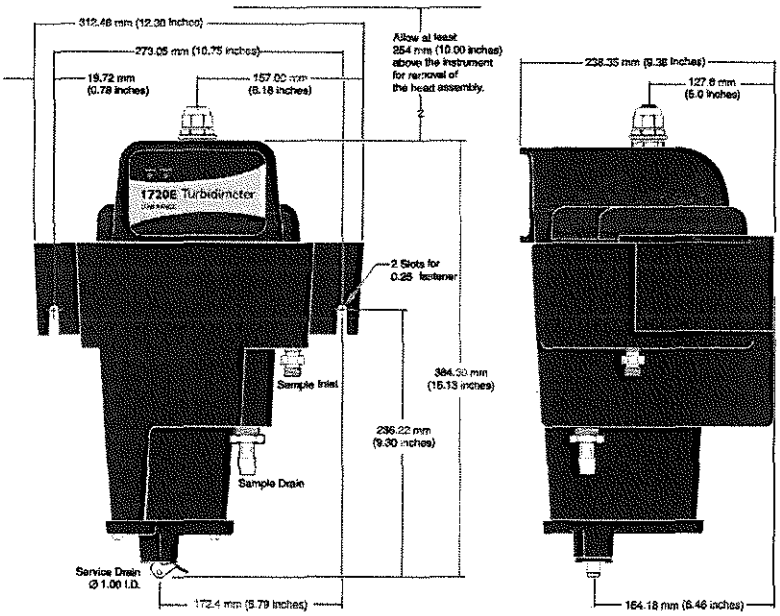

The dimensions of the Turbidimeter 1720E sc are 524 x 305 x 406 mm (W x H x D), a clearance of 254 mm is required above the instrument.

HACH LANGE services

Contact us to place an order, request information or receive technical support.

Support on-site by expert sales team.

Technical data

Measuring technique	90° scattered light technique in accordance with USEPA 180.1 (Wolfram white light)
Measuring range	0.0001-100 NTU (TE/F, mg/l) can be programmed as required
Resolution	0.0001-9.9999 / 10.000-99.999
Precision	±0.015 NTU bzw. ±2 % (0-10 NTU), ±5 % (10-40 NTU), ±10 % (40-100 NTU)
Reproducibility	±0.002 NTU or ±1.0%
Variation coefficient	1 % in accordance with DIN 38402
Response time	6, 30, 60, 90 s (can be programmed as required), 75 s over full measuring range
Air bubble compensation	Physical using integrated bubble trap
Calibration	Using formazine or STABL CAL standards
Verification	Dry standard ICE-PIC or STABL CAL
Sample size required	Min. 0,25 l/min, max. 0,75 l/min.
Sample temperature	Max. 50 °C
Ambient temperature	With one sensor: +2 to +50 °C; With two sensors: +2 °C to +40 °C
Sample connection	Sample inlet: ¼" NPT female thread Sample drain: ½" NPT female thread (hose connectors included)
Materials	Corrosion-resistant polystyrene
Enclosure rating	NEMA 4X /IP 66
User maintenance	1.5 h / month
Weight	Approx. 4.54 kg
Display unit	Controller SC 100 (model LXV401) or SC 1000 (model LXV400 and LXV402)

Ordering information

DESCRIPTION	ART. NO.
1720E sc turbidity bypass sensor with 2m cable	LPV417.99.00001
ACCESSORIES	
Turbidity standard formazine 4000 NTU	LCW813
Formazine calibration kit (calibration cylinder, TenSette pipette, 500 ml bottle 4000 NTU formazine primary standard)	44156-00
0.2 µm membrane filter for zero point check (without hose)	EXF014
STABLCAL calibration standard	
- >0,1 NTU (1 l)	26597-53
- 1 NTU (1 l)	26598-53
- 20 NTU (1 l)	26601-53
ICE-PIC verification / calibration module (dry standard)	
- 1 NTU	52215-00
- 20 NTU	52250-00
Extension cable 7 m	58659-00
Sun canopy	58690-00
Mounting stand	52160-00
SPARE PARTS AND CONSUMABLES	
Wolfram photometer lamp	18950-00
Sample drain plug	44116-00

HACH LANGE LTD
Pacific Way
Salford
GB-Manchester, M50 1DL
Tel. +44 (0)161 8721487
Fax +44 (0)161 8487324
info@hach-lange.co.uk
www.hach-lange.co.uk

Phone: (0161) 872 14 87

DOC053.52.03714.Apr04

HACH LANGE
UNITED FOR WATER QUALITY

Industries

- Municipal waste water
- Industrial waste water
- Drinking water
- Process water

SC 200 Digital 2 Channel Controller

One controller for 40+ sensors and 14 parameters
The digital 2-channel SC 200 Controller is compatible with our complete range of digital and analogue sensors. There are 40+ sensors to choose - from Ammonium to Turbidity as well as special parameters such as Oil in Water. The one-stop-shop controller and its family of sensors monitor processes for all applications in waste-water, drinking and process water. Standardisation on one controller reduces maintenance complexity, time and costs. Plus you only have one company to call - us.

Easy to extract data
To help you analyse and further improve your processes the SC 200 offers a new solution for simple data management. All logged measuring and diagnosis data can be easily extracted in XML format from the controller via the SD Card slot.

Easy to keep firmware up to date
A new legal regulation is only one of several reasons why instrumentation firmware must always be kept up to date. Aside from legal requirements we invest heavily to add new functionality, new parameters, new sensors etc. SC 200 makes this easy via the SD card slot.

One controller for all applications
HACH LANGE is the recognized leader for water analytic solutions. With the launch of the SC 200, more than 40 different analogue and digital plug & play sensors can now be combined. Due to its rugged and robust metal enclosure, the SC 200 is suitable for industrial applications virtually anywhere.

With the communication options PROFIBUS DP and MODBUS RS232 / RS485, the controller can be easily integrated into digital networks. The modular concept (one slot for a communication card of choice and two slots for input cards) makes the SC 200 stand out in terms of capability and flexibility.

SC 200 Digital 2-channel Controller

Technical Data Basic Instrument

Display
Graphic dot matrix LCD with LED backlighting

Display size
68 mm x 48 mm

Display resolution
240 x 160 pixels

Dimensions
144 mm x 144 mm x 181 mm

Weight
1.70 kg

Power requirements
100 to 240 V AC 10 %, 50/60 Hz
24 VDC -15 %/+ 20 %

Operating temperature
-20 to 60 °C , 0 to 95% RH non-condensing

Storage temperature
-20 to 70 °C , 0 to 95 % RH non-condensing

Analogue outputs
Two 0/4 to 20 mA isolated current outputs, max 550 Ω

Analogue outputs: Operational mode
Primary or secondary measurement, calculated value (dual channel only)

Analogue outputs: Functional mode
Linear, Logarithmic, Bi-linear, PID

Security levels
2

Material enclosures
Polycarbonate
Aluminium (powder coated)
Stainless Steel

Mounting configurations
Wall, Pole and Panel Mounting

Enclosure rating
NEMA4X / IP66

Relays
Four electromechanical SPDT (Form C) contacts, 1200 W, 5 A

Relays: Operational mode
Primary or secondary measurement, calculated value (dual channel only) or timer

Relays: Functional mode
Alarm, Timer, Feeder Control, PWM or Fm Control, System Alarm

Memory backup
Flash memory

Electrical certifications
EMC - Certified CE compliant for conducted and radiated emissions (EN 50081-2) and immunity (EN 61000-6-2); General purpose - UL through ETL

Warranty
2 years

Subject to change without notice.

SC 200 configuration variants

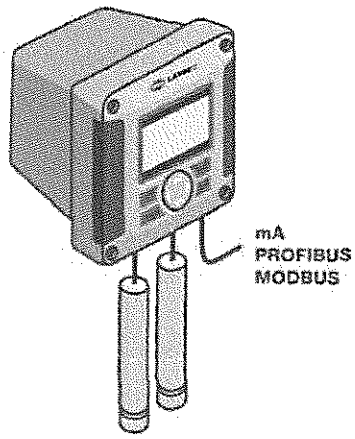

Variant 1: Fully digital - for max. two SC sensors, direct plug & play

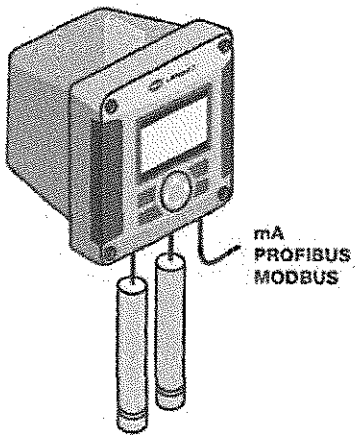

Variant 2: Combined version - one digital SC sensor and one analogue sensor with suitable sensor input card

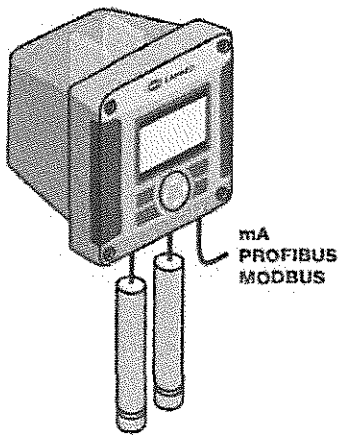

Variant 3: Fully analogue - for max. two analogue sensors plus their input cards

SC 200 Digital 2-channel Controller

Sensor input cards

Product description	SC 200 Sensor input card for analogue pH / ORP sensors (9012900)	SC 200 Sensor input card for analogue contacting conductivity sensors (9013000)	SC 200 Sensor input card for analogue inductive conductivity sensors (9013000)	SC 200 Sensor input card mA IN signals (9012800)
Measuring ranges pH	-2.0 to 14.0 pH -2.00 to 14.00 pH			
Measuring range ORP	-2100 to 2100 mV			
Measuring ranges conductivity		0 to 2.000 µS/cm 0 to 20.00 µS/cm 0 to 200.0 µS/cm 0 to 2000 µS/cm 0 to 2.000 mS/cm 0 to 20.00 mS/cm 0 to 200.0 mS/cm	0 to 200.0 µS/cm 0 to 2000 µS/cm 0 to 2.000 mS/cm 0 to 20.00 mS/cm 0 to 200.0 mS/cm 0 to 2000 mS/cm 0 to 2.000 S/cm	
Measuring ranges resistivity		0 to 19.99 MΩcm 0 to 999.9 kΩcm		
Measuring ranges concentration			0 to 99.99 % 0 to 200.0 %	
Measuring ranges TDS		0 to 9999 ppm 0 to 9999 ppb	0 to 9999 ppm	
Signal range				0 to 25 mA
Repeatability	± 0.1 % of range	0 to 20 µS/cm, K=1: ± 0.02 µS/cm 20 to 200,000 µS/cm, K=1: ± 0.1 % of reading	> 500 µS/cm: ± 0.5 % of reading < 500 µS/cm: ± 2.5 µS/cm	
Response times	0.5 s	0.5 s	1 s	
Temperature ranges	PT100 / PT1000 -20 to 200°C NTC300 -20 to 110 °C Manual -25 to 400 °C	-20 to 200 °C	-20 to 200 °C	
Temperature accuracy	± 0.5 °C	± 0.5 °C	± 0.5 °C	
Temperature drifts	± 0.03 % of reading / °C	> 20 µS/cm: ± 0.02 % of reading / °C	> 500 µS/cm: ± 0.02 % of reading / °C	
Temperature compensation	Automatic from -20 to 110°C or manual	Automatic from -20 to 200 °C or manual	Automatic from -20 to 200°C or manual	
Temperature sensors	PT100 / PT1000 / NTC300	PT100 / PT1000	PT1000	
Temperature compensation curves	Nernst, Pure Water: Ammonium, Morpholine, user defined (linear)	Linear, Ammonium, Natural Water, user defined, none	Linear, Natural Water, user defined, none. Available curves depend on the selected type of measurement (Conductivity, Concentration or TDS).	
Sensor to controller distances (maximal)	pHD sensor: 914 m pH combination electrode with pre-amplifier: 300 m pH combination electrode without pre-amplifier: 30 m (depending on environment this distance is shorter)	Max. length: 91 m	Full-scale value 200 to 2,000 µS/cm max. length: 61 m Full-scale value 2,000 to 2,000,000 µS/cm max. length: 91 m	
Concentration curves			H_3PO_4: 0-40% HCl: 0-18% HCl: 22-36% NaOH: 0-16% $CaCl_2$: 0-22% HNO_3: 0-28% HNO_3: 36-96% H_2SO_4: 0-30% H_2SO_4: 40-80%	
Calibration methods	2-point buffer (pH only) 1-point buffer (pH only) 2-point sample (pH only) 1-point sample (pH and ORP)	Zero GLI DRY-CAL 1-point sample	Zero 1-point Cond (or Concentration or TDS)	

Subject to change without notice.

SC 200 Digital 2-channel Controller

Parameters and applicable sensors

Parameters	Digital sensors
Ammonium	AMTAX sc
	AMTAX indoor sc
	NH4D sc
	AN-ISE sc
Chlorine	9184 sc
	CLF10 / CLT10 sc
Chlorine dioxide	9187 sc
Conductivity	3798-S sc
Dissolved oxygen	LDO
	5740 sc
Nitrate	NITRATAX clear sc
	NITRATAX plus sc
	NITRATAX eco sc
	NO3D sc
	AN-ISE sc
Oil in water	FP360 sc
Organics	UVAS sc
Ozone	9185 sc
pH/ORP	pHD sc
	1200-S sc
Phosphate	PHOSPHAX sc
	PHOSPHAX indoor sc
Sludge level	SONATAX sc
Suspended solids	TSS sc
	TSS HT sc
	TSS VARI sc
	TSS XL sc
	TSS Titan 2 sc
	TSS Titan 7 sc

Parameters	Digital sensors
Suspended solids/turbidity, high resolution	SOLITAX ts-line sc
	SOLITAX t-line sc
	SOLITAX hs-line sc
	SOLITAX inline sc
	SOLITAX highline sc
Turbidity, high resolution	SS7 sc
Turbidity, low resolution	ULTRATURB sc
	ULTRATURB plus sc
	1720E
Turbidity, ultra low resolution	FT660 sc

Parameters	Analogue sensors
Conductivity	GLI 3400 series
	GLI 3700 series
	POLYMETRON 831X series
pH/ORP	pHD
	pH combination electrodes

SC 200 configuration

Power supply
- **0** Without power cord
- **2** EU power cord
- **3** UK power cord
- **4** Swiss power cord
- **7** 24 VDC

Communications Output
- **0** 2 x 0/4-20mA Outputs
- **1** MODBUS 232 & 485
- **3** PROFIBUS DP

Sensor Input 1
- **5** Digital (all SC sensors)
- **1** Analogue: pH / ORP / DO
- **2** Analogue: Conductivity
- **4** mA Input

Sensor Input 2
- **0** None
- **5** Digital (all SC sensors)
- **1** Analogue: pH / ORP / DO
- **2** Analogue: Conductivity
- **4** mA Input

Important:
"Sensor Input 1" has to be bigger than the "Sensor Input 2" ID
- Example: Correct = LXV404.99.xx501,
Wrong = LXV404.99.xx051

L	X	V	4	0	4	.	9	9	.					1

DOC053.52.35003.Oct10

Subject to change without notice.

HACH LANGE LTD
Pacific Way
Salford
GB-Manchester, M50 1DL
Tel. +44 (0)161 8721487
Fax +44 (0)161 8487324
info@hach-lange.co.uk
www.hach-lange.co.uk

Phone: (0161) 872 14 87

HACH LANGE

UNITED FOR WATER QUALITY

HACH LANGE

UNITED FOR WATER QUALITY

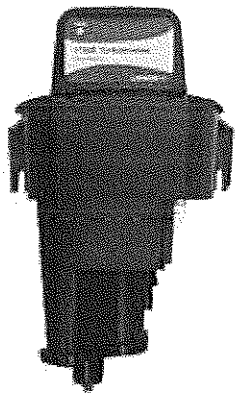

The white light turbidity sensor for low turbidities: 1720E

1720E Low range bypass sensor with 2 m connection cable

Order number: LPV417.99.00002

Continuous-reading nephelometric turbidimeter designed for low-range turbidity monitoring. This process turbidimeter is capable of measuring turbidity from 0.0001 to 100.0 NTU.

- Accuracy
- Simplicity
- Data Collection and Display
- Plug and play with SC controllers
- Experience

Meets and exceeds USEPA Method 180.1 for measuring turbidity for drinking water compliance. One controller accepts up to two plug and play sensors giving you two complete turbidimeters. Sensitive to fine changes in low level turbidity with a built-in bubble removal system. Built-in datalogger stores up to 6 months of data. Versatile digital output-MODBUS protocol, LonWorks or wireless IR port. Two year warranty.

Technical Specifications

Accuracy	±2% of reading or ±0.02 NTU (whichever is greater) from 0 - 40 NTU
Accuracy	±5% of reading from 40 - 100 NTU (Defined according to ISO 15839.)
Alarm	When connected to sc controller: three set-point alarms, each equipped with an SPDT relay with unpowered contacts rated 5A resistive load at 230 Vac
Certifications	Listed by ETL to UL 61010A-1: Certified by ETL to CSA C22.2 No. 1010.1: CE certified by Hach Company to EN 61010-1
Communication	Network card compatible; MODBUS/RS485, MODBUS/RS232, LonWorks protocol (optional)
Communication: digital	When connected to sc controller: MODBUS RS232/RS485, PROFIBUS, HART

Compliance	Standard Methods 2130B, USEPA 180.1, Hach Method 8195
Current output	0/4 output span programmable over any portion of the 0-100 NTU range; built into the SC 100 Controller
Dimensions Metric (H x W X D)	254 mm x 305 mm x 406 mm
Flow rate	200 - 750 mL/minute (3.1 to 11.9 gal/hour)
Measuring range	0.001 - 100 Nephelometric Turbidity Units (NTU)
Mounting style	Turbidimeter body and head assembly: wall and floor stand; sc controller: wall, pole, panel, and floor stand
Operating conditions	5 - 95 % non-condensing
Operating temperature range	0 - 50 °C (Single Sensor System)
Operating temperature range	0 - 40 °C (Double Sensor System)
Outputs	Up to five selectable for 0-20 mA or 4-20 mA; output span programmable over any portion of the 0-100 NTU range; built into the sc Controller
Power requirements (Hz)	50 - 60 Hz
Power requirements (Voltage)	None
Repeatability	Better than ± 1.0 % of reading or ± 0.002 NTU, whichever is greater (defined according to ISO 15839)
Resolution	0.0001 NTU up to 9.9999 NTU; 0.001 NTU from 10.000 to 99.999 NTU; 0.01 NTU at 100.00 NTU
Response time	Initial response in 1 minute, 15 seconds for a full-scale step change
Sample input	1/4 inch NPT female, 1/4 inch compression fitting (provided)
Sample output	NPT female thread (1/2" hose barb provided)
Sample temperature	0 - 70 °C (32 to 158 °F)
Signal average time	User selectable from 0, 6, 30, 60, 90 seconds
Special notes	Standard Methods 2130B, USEPA 180.1, Hach Method 8195
Storage conditions	-20 - 60 °C (-4 to 140 °F)
Width	305 mm

Subject to change without notice.

www.hach-lange.com

HACH LANGE LTD
Pacific Way
Salford
GB-Manchester, M50 1DL
Tel. +44 (0)161 8721487
Fax +44 (0)161 8487324
info@hach-lange.co.uk
www.hach-lange.co.uk

Chapter 2.11

Technical Literature - Chlorine Dioxide Analyzer

PRODUCT INFORMATION
PROCESS ANALYSIS
AMPEROMETRIC SENSORS

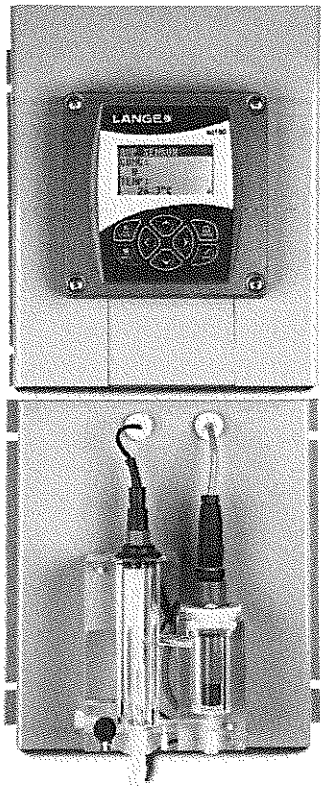

Smart amperometric free chlorine, chlorine dioxide and ozone sensors

- → **Stable measuring results thanks to flow optimisation**
- → **Premounted flow cell, easy to install**
- → **Special accessories for optimal operation**
- → **Compatible with multi-parameter digital SC controllers**
- → **Minimal maintenance with automatic cleaning**

Simple installation and operation
The all-inclusive systems come pre-assembled on a panel. Just mount the panel in the desired location, install the sensors, and connect the controller to get started. There are no chemicals used for measurement. Membranes are premounted on retaining caps so the maintenance and the operational costs are minimal. Two years of typical maintenance items are included with the system.

Options for optimised operation
For all amperometric sensors several accessories are available:

→ Acidification unit
This can be used for sample pH adjustment or for cleaning. It is fully programmable.

→ Intermittent flow unit
This free programmable unit reduces the amount of sample water which is sent to waste.

HACH LANGE

UNITED FOR WATER QUALITY

Free chlorine

Low detection limit for efficient residual chlorine monitoring
The 9184 sc amperometric free chlorine sensor has a detection limit of 5 ppb or 0.005 mg/l hypochlorous acid (HOCl). Together with pH and temperature measurements, free chlorine concentration is calculated using dissociation curves stored in the instrument.

Wide measurement range
Due to its 0 to 20 ppm measurement range, the 9184 sc free chlorine sensor is particularly useful for drinking water distribution monitoring, chlorination applications, demineraliser systems or cooling water processes.

Three forms of chlorine
Measurements are made continuously by the sensor and reported to the controller.

Depending on model, the 9184 sc sensor can measure:

→ Hypochlorous acid (HOCl) only
→ HOCl via acidification
→ Total free chlorine (TFC) by measuring temperature and pH together with HOCl to calculate hypochlorite ions (OCl^-). HOCl combined with OCl^- equals total free chlorine.

Active chlorine operations
Active chlorine (HOCl) or hypochlorous acid is a powerful disinfectant – up to 100 times more efficient than hypochlorite ions.

→ Total free chlorine (TFC) is composed of dissolved chlorine (at low pH values), hypochlorous acid gas, and hypochlorite ion (ClO^-) coexisting in the sample.

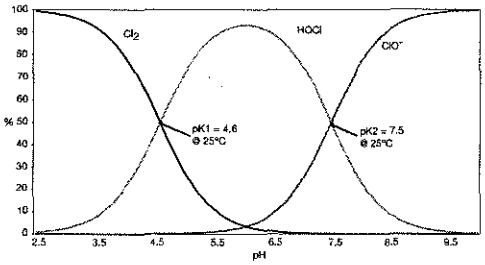

Fig. 1: Dissociation curve

Their relative proportion depends on pH and temperature (see figure 1 above).

→ Total combined chlorine (TCC) results from the addition of total free chlorine and chloramines (mono-, di- and tri-chloramines).*

* 9184 sc does not measure TCC.

Ozone

Wide measurement range with few interferences
Bromine, chloramines, chlorine, chlorine dioxide, hydrogen peroxide, and pH do not interfere with ozone measurements when using the 9185 sc amperometric ozone sensor which can measure from 0 to 2 mg/l ozone.

Ideal for low conductivity samples
The 9185 sc ozone system has a low minimum detection limit of 0.005 mg/l ozone. And because the amperometric cell is separated from the sample by the membrane and is immerged into an electrolytic medium, the 9185 sc ozone sensor is suitable for use in water with low conductivity.

Ozone operations
Ozone is highly soluble in water – up to 13 times more soluble than oxygen. Ozone is also highly unstable in water with stability decreasing with increasing temperature.

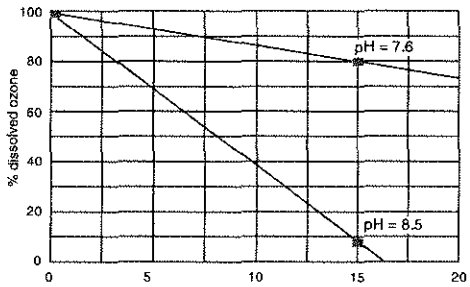

Fig. 2: Time of breakdown (mn) of dissolved ozone

Ozone reacts with hydroxide ions (OH^-). As the concentration of OH^- increases (pH increases), reaction with ozone increases (see figure 2). The hydroxide ion OH^- is a by-product of ozone breakdown in water and the reaction between OH^- and O_3 can be sustained until ozone is completely removed.

Chlorine dioxide

Selective membrane avoids interference from chlorine
The 9187 sc amperometric chlorine dioxide sensor uses a membrane that is selective for chlorine dioxide molecules. There are no interferences from bromine, chlorine, or hydrogen peroxide.

The only potential interference is from ozone, which is rarely present in water treated with chlorine dioxide. The oxidation potential of chlorine dioxide is 2.5 times higher than chlorine. It is relatively independent from the pH value and therefore suitable for disinfection of alkaline water.

The electrochemical reaction and diffusion through the membrane are temperature dependent. The measurement cell contains a temperature sensor for automatic temperature compensation to prevent measurement errors.

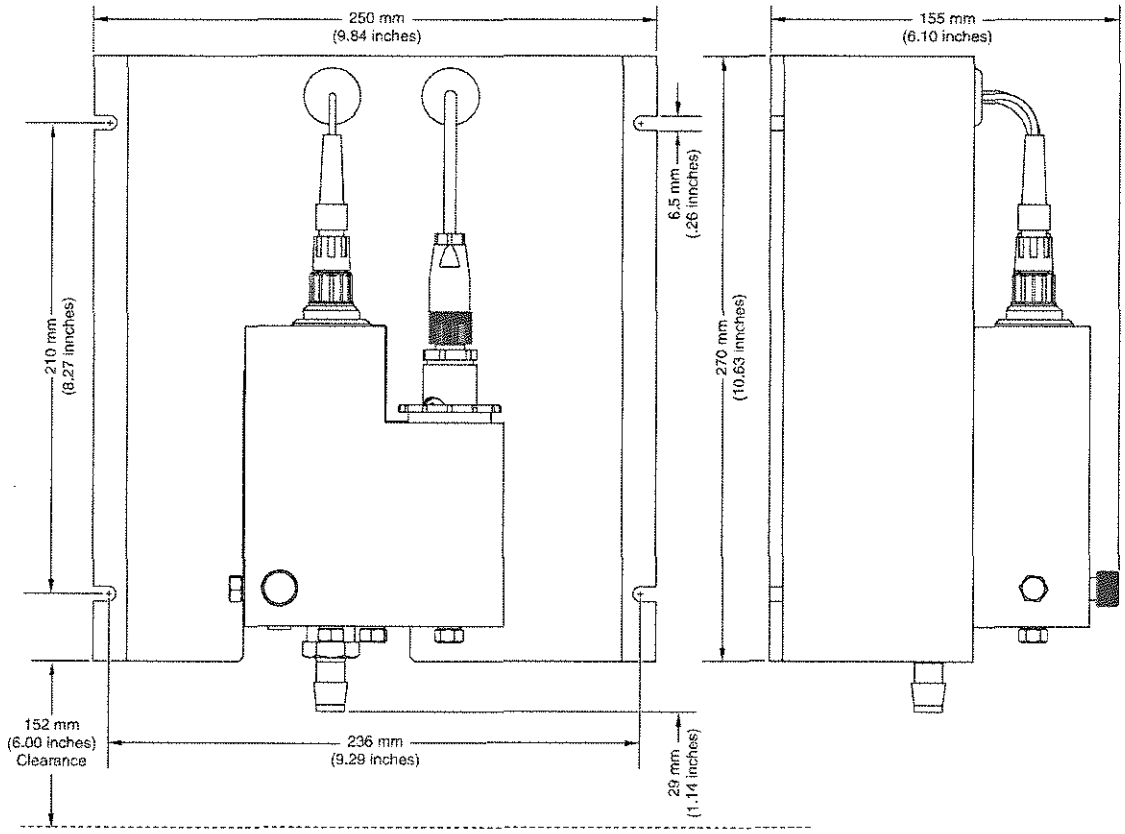

The sensor should be installed in an accessible location. It can be mounted on a flat, vertical surface (such as a panel, stand, etc.). It should allow for access for any checking or maintenance. Sample flow should meet the specifications on the last page.
Note: The optional pH probe is used for the 9184 sc free chlorine TFC sensor only.

Technical data

PARAMETER	9184 sc - FREE CHLORINE	9185 sc - OZONE	9187 sc - CHLORINE DIOXIDE
Measurement range	0 to 20 ppm (mg/l) as HOCl	0 to 2 ppm (mg/l) O_3	0 to 2 ppm (mg/l) as ClO_2
Minimum detection limit	5 ppb or 0.005 mg/l HOCl	5 ppb or 0.005 mg/l O_3	10 ppb or 0.01 mg/l ClO_2
Accuracy	2% or ±10 ppb HOCl, whichever is greater	3% or ±10 ppb O_3, whichever is greater	5% or ±10 ppb ClO_2, whichever is greater
Response time	90% in less than 90 seconds		
Measurement interval	Continuous		
Minimum flow rate	14 l/h (200 to 250 ml/min) auto-regulated by flow through cell		
Pressure range	0.1 to 2 bar in flow cell		
Sample temperature	2 °C to 45 °C		
Temperature compensation	Automatic over sample temperature range		
Sample pH	4 to 8 (acidification unit available for pH greater than 8)	-	-
Measurement technology	Amperometric/membrane		
Interferences	No interference from chloramines, chlorine dioxide and ozone interfere with measurement	No interference from bromine, chloramines, chlorine, chlorine dioxide, or hydrogen peroxide	Ozone
Mounting	Flat, vertical surface (panel, stand, etc.)		
Connections	Sample line: 1/4 inch O.D., drain line: 1/2 inch I.D. (supplied)		
Materials	Electrode: gold cathode/silver anode, measuring cell: acrylic, probe body: PVC		
Controller	SC 100 / SC 1000		Integrated
Environmental ratings	IP 66/NEMA 4X		
Dimensions	299 x 250 mm (11.77 x 9.84 inch)		

Subject to change without notice.

Ordering information

DESCRIPTION	ART. NO.
9184 sc free chlorine HOCl sensor	LXV430.99.00001
9184 sc free chlorine TFC sensor	LXV432.99.00001
9185 sc ozone sensor	LXV433.99.00001
9187 sc chlorine dioxide sensor	LXV434.99.00001
ACCESSORIES	
Digital extention cable 1 m (other lenghts available)	61224-00
Digital termination box*	58670-00
9180 sc acidification unit	LZY051
9180 sc intermittent flow unit	LZY052
REPLACEMENT PARTS	
pH electrode	Z368416,00000
9184 sc electrode	Z09184=A=1001
- Premounted membranes, qty. 4	Z09184=A=3500
- Electrolyte	Z09184=A=3600
9185 sc electrode	Z09185=A=1000
- Premounted membranes, qty. 4	Z09185=A=3500
- Electrolyte	Z09185=A=3600
9187 sc electrode	Z09184=A=1001
- Premounted membranes, qty. 4	Z09187=A=3500
- Electrolyte	Z09187=A=3600

* Required when the length of cable between the digital sensor and SC 100 or SC 1000 controller exceeds 100 m.

HACH LANGE Services

Contact us to place an order, request information or receive technical support.

On-site support by our technical field staff.

Quality assurance, complete with standard solutions, instrument checks and test solutions.

www.hach-lange.com - up to date and secure, with downloads, information and shop.

HACH LANGE LTD
Pacific Way
Salford
GB-Manchester, M50 1DL
Tel. +44 (0)161 8721487
Fax +44 (0)161 8487324
info@hach-lange.co.uk
www.hach-lange.co.uk

Phone: (0161) 872 14 87

DOC063.52.00441.Jun07

HACH LANGE

UNITED FOR WATER QUALITY

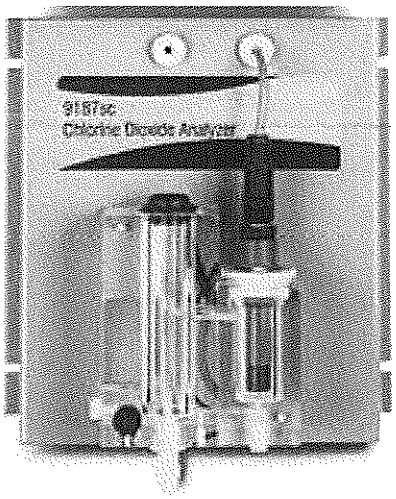

Smart amperometric Chlorine Dioxide Analyser: 9187 sc

9187 sc Chlorine Dioxide amperometric analyser

Order number: LXV434.99.00001

Single-channel industrial analyser. A membrane allows the selective diffusion of ClO_2 molecules. pH and temperature compensated.

All-inclusive system (without controller) preassembled on a panel.

- Includes a selective membrane which avoids interference from Chlorine
- Stable measurements thanks to the flow-through cell
- Easily installed premounted flow-through system
- Minimal maintenance thanks to automatic cleaning
- Compatible with multi-sensor, multi-parameter digital controllers

The membranes of the gold cathode and silver anode are pre-mounted on retaining caps to simplify and reduce maintenance time.

Technical Specifications

Accuracy	5 % or ±10 ppb ClO_2, whichever is greater
Calibration interval	2 months
Calibration method	Zero Calibration: Electrically or with ozone-free water Calibration: Comparison of lab method with process sample
Detection limit	0.01 mg/L ClO_2
Flow	14 L/h (200 to 250 mL/min) autoregulated by flow thru cell
Interferences	No interference from bromine, chloramines, chlorine, chlorine dioxide, or hydrogen peroxide
Maintenance interval	6 months for membrane and electrolyte (measurement cell)
Measuring interval	Continuous
Measuring principle	Amperometric/Membrane (electrode, membrane, electrolyte)

Measuring range	0 - 2 mg/L as chlorine dioxide (ClO2)
Mounting style	Flat, vertical surface (panel, stand, etc.)
Operating temperature range	0 - 45 °C
Parameter	Chlorine Dioxide
Pressure range	0.1 - 2 bar in flow cell
Relative humidity	0 - 90 % non-condensing
Response time	90 % in less than 90 seconds
Sample input	0.25 " outer diameter
Sample output	0.5 " inner diameter
Sample temperature	2 - 45 °C (35.6-113 F)
Standard deviation	1.5 %
Storage conditions	-20 °C - 60 °C
Temperature compensation	Automatic over sample temperature range
Weight	6.5 kg
Width	250 mm

Subject to change without notice.

www.hach-lange.com

HACH LANGE LTD
Pacific Way
Salford
GB-Manchester, M50 1DL
Tel. +44 (0)161 8721487
Fax +44 (0)161 8487324
info@hach-lange.co.uk
www.hach-lange.co.uk

Chapter 2.12

Technical Literature - Conductivity Analyzer

PRODUCT INFORMATION
PROCESS ANALYSIS
ELECTROCHEMISTRY

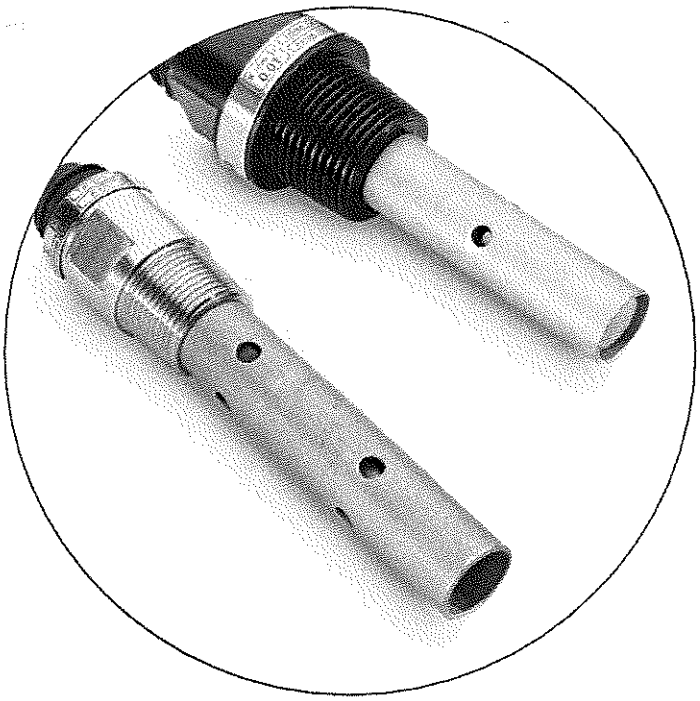

Contacting conductivity sensor for pure medium: 3400 sc family

- → **Large measuring range**
- → **High precision**
- → **Wide application range**
- → **Stainless steel design**
- → **Versatile mounting styles**
- → **Can be combined as required with other SC probes**

High quality probes
The high quality special steel or graphite probes of the 3400 sc family are available with three different cell constants, namely 0.01 cm^{-1}, 0.1 cm^{-1} and 1 cm^{-1}. They cover a wide measuring range from 0.01 µS/cm to 2 mS/cm. The specific cell constant of each probe is determined in conformity with ISO 7888/ ASTM D 1125 and entered in the SC controller when it is first taken into operation (HACH LANGE DRY-CAL* method). The objective is to guarantee maximum measurement accuracy.

Versatile applications
Thanks to the wide range of 3400 sc models available, the applications spectrum extends from drinking water to ultrapure water at high temperatures and pressures. Different fitting systems enable measurements to be carried out in pipes and bypasses. Moreover, a sterilizable FDA-approved probe with a Tri Clamp mounting kit is available for the food and pharmaceutical industry. Thanks to the quick disconnect plug, together with digital plug-and-play operation, the probes can be flexibly and simply connected to the SC controllers.

HACH LANGE

UNITED FOR WATER QUALITY

Technical data

	3410 sc	3411 sc	3412 sc	3415 sc	3416 sc	3417 sc	3494 sc*
Temperature max.		125°C			150°C		150°C
Pressure max.		10 bar			25 bar		25 bar
Cell constant	0.01 cm^{-1}	0.1 cm^{-1}	1 cm^{-1}	0.01 cm^{-1}	0.1 cm^{-1}	1 cm^{-1}	0.01 cm^{-1}
Measuring range	0.01-20 µS/cm	0.1-200 µS/cm	1-2,000 µS/cm	0.01-20 µS/cm	0.1-200 µS/cm	1-2,000 µS/cm	0.01-20 µS/cm
Materials							
- sensor head	Polyester	Polyester	Polyester	Stainless steel	Stainless steel	Stainless steel	Stainless steel
- sensor body	Stainless steel	Stainless steel	Graphite	Stainless steel	Stainless steel	Graphite	Stainless steel
Ports		3/4" NPT			3/4" NPT		Tri Clamp

* FDA aproved

Ordering information

DESCRIPTION	ART. NO.
3410 sc sensor	D3410
3411 sc sensor	D3411
3412 sc sensor	D3412
3415 sc sensor	D3415
3416 sc sensor	D3416
3417 sc sensor	D3417
3494 sc* sensor	D3494
SPARE PARTS AND ACCESSORIES	
Digital extension cable	
- with 5 m	LZX848
- with 10 m	LZX849
- with 15 m	LZX850
- with 20 m	LZX851
- with 30 m	LZX852
- with 50 m	LZX853
Conductivity standard, 1l with 100-1,000 µS/cm (Please specify the desired conductivity value when placing your order)	25M3A2000-119
SC 100 contoller	LXV401
SC 1000 contoller	LXV400 + LXV402

* FDA aproved

HACH LANGE services

Contact us to place an order, request information or receive technical support.

Support on-site by expert sales team.

www.hach-lange.com - up-to-date and secure, with downloads, information and shop.

DOC 063.52.00402.Dec04

HACH LANGE LTD
Pacific Way
Salford
GB-Manchester, M50 1DL
Tel. +44 (0)161 8721487
Fax +44 (0)161 8487324
info@hach-lange.co.uk
www.hach-lange.co.uk

Phone: (0161) 872 14 87

HACH LANGE

UNITED FOR WATER QUALITY

HACH LANGE

UNITED FOR WATER QUALITY

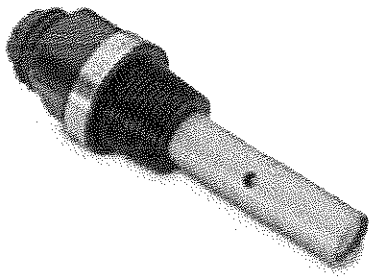

Contacting conductivity sensor for pure medium: 3400 sc family

Digital 2-EL conductivity sensor, K=0.1cm^{-1}, 5m cable

Order number: D3411.99

Analogue 2-electrode sensor for conductivity measurement, with digital gateway for SC controller; with 5m cable between sensor and gateway and 1m cable to controller, flow-through probe incl Pt1000 temperature sensor

- Large measuring range
- High precision
- Wide application range
- Stainless steel design
- Versatile mounting styles

Technical Specifications

Cable connection	IP 65 fiber-glass-reinforced polyester plug head
Cell constant	0.1 cm^{-1}
Diameter	16 mm
Length	119.5 mm
Measuring principle	2-EL contacting conductivity
Measuring range	0.1 - 200 µS/cm
Operating temperature range	125 °C maximum
Pressure range	max. 10 bar
Special notes	Composition: 2-EL conductivity sensor (Z08311=A=0000) 5 m analogue cable (Z08319=A=1115) AD gateway (6120700) 1 m digital cable (6122400)
Temperature sensor	Pt1000
Vessel constant	1.00 if mounted in 8318 flow chamber

Subject to change without notice.

www.hach-lange.com

HACH LANGE LTD
Pacific Way
Salford
GB-Manchester, M50 1DL
Tel. +44 (0)161 8721487
Fax +44 (0)161 8487324
info@hach-lange.co.uk
www.hach-lange.co.uk

PRODUCT INFORMATION
PROCESS ANALYSIS
ELECTROCHEMISTRY

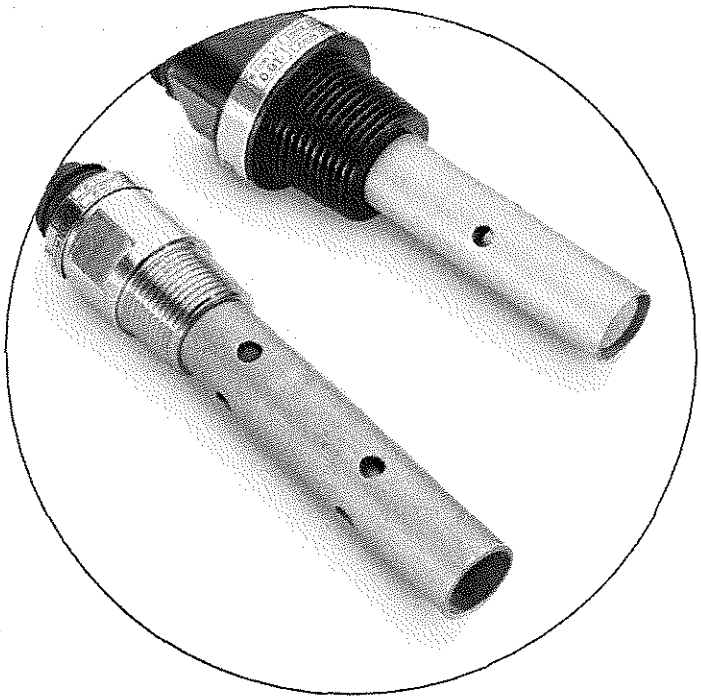

Contacting conductivity sensor for pure medium: 3400 sc family

- → **Large measuring range**
- → **High precision**
- → **Wide application range**
- → **Stainless steel design**
- → **Versatile mounting styles**
- → **Can be combined as required with other SC probes**

High quality probes
The high quality special steel or graphite probes of the 3400 sc family are available with three different cell constants, namely 0.01 cm^{-1}, 0.1 cm^{-1} and 1 cm^{-1}. They cover a wide measuring range from 0.01 µS/cm to 2 mS/cm. The specific cell constant of each probe is determined in conformity with ISO 7888/ ASTM D 1125 and entered in the SC controller when it is first taken into operation (HACH LANGE DRY-CAL* method). The objective is to guarantee maximum measurement accuracy.

Versatile applications
Thanks to the wide range of 3400 sc models available, the applications spectrum extends from drinking water to ultrapure water at high temperatures and pressures. Different fitting systems enable measurements to be carried out in pipes and bypasses. Moreover, a sterilizable FDA-approved probe with a Tri Clamp mounting kit is available for the food and pharmaceutical industry. Thanks to the quick disconnect plug, together with digital plug-and-play operation, the probes can be flexibly and simply connected to the SC controllers.

HACH LANGE

UNITED FOR WATER QUALITY

Technical data

	3410 sc	3411 sc	3412 sc	3415 sc	3416 sc	3417 sc	3494 sc*
Temperature max.		125°C			150°C		150°C
Pressure max.		10 bar			25 bar		25 bar
Cell constant	0.01 cm^{-1}	0.1 cm^{-1}	1 cm^{-1}	0.01 cm^{-1}	0.1 cm^{-1}	1 cm^{-1}	0.01 cm^{-1}
Measuring range	0.01-20 µS/cm	0.1-200 µS/cm	1-2,000 µS/cm	0.01-20 µS/cm	0.1-200 µS/cm	1-2,000 µS/cm	0.01-20 µS/cm
Materials							
- sensor head	Polyester	Polyester	Polyester	Stainless steel	Stainless steel	Stainless steel	Stainless steel
- sensor body	Stainless steel	Stainless steel	Graphite	Stainless steel	Stainless steel	Graphite	Stainless steel
Ports		3/4" NPT			3/4" NPT		Tri Clamp

* FDA aproved

Ordering information

DESCRIPTION	ART. NO.
3410 sc sensor	D3410
3411 sc sensor	D3411
3412 sc sensor	D3412
3415 sc sensor	D3415
3416 sc sensor	D3416
3417 sc sensor	D3417
3494 sc* sensor	D3494
SPARE PARTS AND ACCESSORIES	
Digital extension cable	
- with 5 m	LZX848
- with 10 m	LZX849
- with 15 m	LZX850
- with 20 m	LZX851
- with 30 m	LZX852
- with 50 m	LZX853
Conductivity standard, 1l with 100-1,000 µS/cm (Please specify the desired conductivity value when placing your order)	25M3A2000-119
SC 100 contoller	LXV401
SC 1000 contoller	LXV400 + LXV402

* FDA aproved

HACH LANGE services

Contact us to place an order, request information or receive technical support.

Support on-site by expert sales team.

www.hach-lange.com - up-to-date and secure, with downloads, information and shop.

DOC 063.52.00402.Dec04

HACH LANGE LTD
Pacific Way
Salford
GB-Manchester, M50 1DL
Tel. +44 (0)161 8721487
Fax +44 (0)161 8487324
info@hach-lange.co.uk
www.hach-lange.co.uk

Phone: (0161) 872 14 87

HACH LANGE

UNITED FOR WATER QUALITY

HACH LANGE

UNITED FOR WATER QUALITY

Rectractable, standard

Order number: LZY236

Technical Specifications

Diameter	80 mm
Electrode thread	Pg 13.5 thread
Electrode type	12 mm
Length	293 mm
Length (electrode shaft)	120 mm
Material	Fitting: Stainless steel 1.4571
Operating temperature range	0 - 90 °C
Pressure range	0 - 4 bar
Special notes	Chemical industry, waste water treatment, food industry, biotechnology, plant engineering, tanks and process containers, pipelines or pipes
Weight	2.5 kg

Subject to change without notice.

www.hach-lange.com

HACH LANGE LTD
Pacific Way
Salford
GB-Manchester, M50 1DL
Tel. +44 (0)161 8721487
Fax +44 (0)161 8487324
info@hach-lange.co.uk
www.hach-lange.co.uk

Industries

- Municipal waste water
- Industrial waste water
- Drinking water
- Process water

SC 200 Digital 2 Channel Controller

One controller for 40+ sensors and 14 parameters
The digital 2-channel SC 200 Controller is compatible with our complete range of digital and analogue sensors. There are 40+ sensors to choose - from Ammonium to Turbidity as well as special parameters such as Oil in Water. The one-stop-shop controller and its family of sensors monitor processes for all applications in waste-water, drinking and process water. Standardisation on one controller reduces maintenance complexity, time and costs. Plus you only have one company to call - us.

Easy to extract data
To help you analyse and further improve your processes the SC 200 offers a new solution for simple data management. All logged measuring and diagnosis data can be easily extracted in XML format from the controller via the SD Card slot.

Easy to keep firmware up to date
A new legal regulation is only one of several reasons why instrumentation firmware must always be kept up to date. Aside from legal requirements we invest heavily to add new functionality, new parameters, new sensors etc. SC 200 makes this easy via the SD card slot.

One controller for all applications
HACH LANGE is the recognized leader for water analytic solutions. With the launch of the SC 200, more than 40 different analogue and digital plug & play sensors can now be combined. Due to its rugged and robust metal enclosure, the SC 200 is suitable for industrial applications virtually anywhere.

With the communication options PROFIBUS DP and MODBUS RS232 / RS485, the controller can be easily integrated into digital networks. The modular concept (one slot for a communication card of choice and two slots for input cards) makes the SC 200 stand out in terms of capability and flexibility.

SC 200 Digital 2-channel Controller

Technical Data Basic Instrument

Display
Graphic dot matrix LCD with LED backlighting

Display size
68 mm x 48 mm

Display resolution
240 x 160 pixels

Dimensions
144 mm x 144 mm x 181 mm

Weight
1.70 kg

Power requirements
100 to 240 V AC 10 %, 50/60 Hz
24 VDC -15 %/+ 20 %

Operating temperature
-20 to 60 °C , 0 to 95% RH non-condensing

Storage temperature
-20 to 70 °C , 0 to 95 % RH non-condensing

Analogue outputs
Two 0/4 to 20 mA isolated current outputs, max 550 Ω

Analogue outputs: Operational mode
Primary or secondary measurement, calculated value (dual channel only)

Analogue outputs: Functional mode
Linear, Logarithmic, Bi-linear, PID

Security levels
2

Material enclosures
Polycarbonate
Aluminium (powder coated)
Stainless Steel

Mounting configurations
Wall, Pole and Panel Mounting

Enclosure rating
NEMA4X / IP66

Relays
Four electromechanical SPDT (Form C) contacts, 1200 W, 5 A

Relays: Operational mode
Primary or secondary measurement, calculated value (dual channel only) or timer

Relays: Functional mode
Alarm, Timer, Feeder Control, PWM or Fm Control, System Alarm

Memory backup
Flash memory

Electrical certifications
EMC - Certified CE compliant for conducted and radiated emissions (EN 50081-2) and immunity (EN 61000-6-2); General purpose - UL through ETL

Warranty
2 years

Subject to change without notice.

SC 200 configuration variants

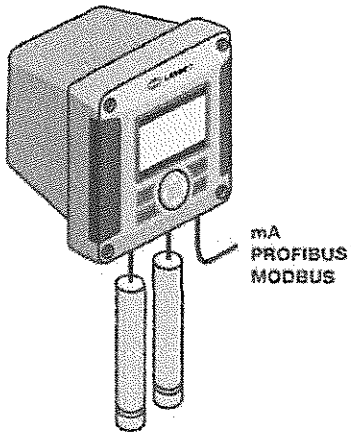

Variant 1: Fully digital - for max. two SC sensors, direct plug & play

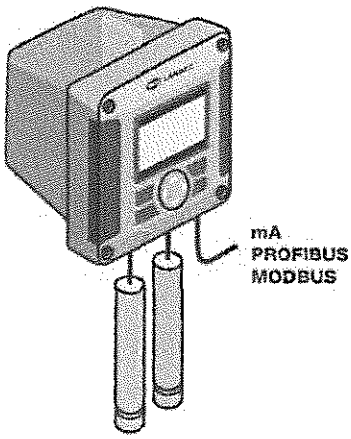

Variant 2: Combined version - one digital SC sensor and one analogue sensor with suitable sensor input card

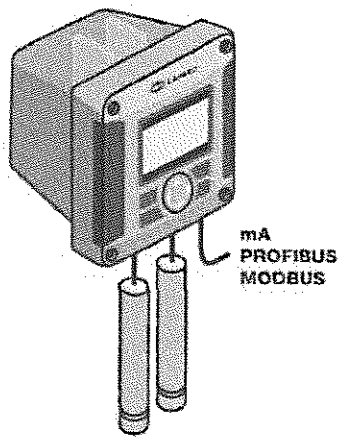

Variant 3: Fully analogue - for max. two analogue sensors plus their input cards

SC 200 Digital 2-channel Controller

Sensor input cards

Product description	SC 200 Sensor input card for analogue pH / ORP sensors (9012900)	SC 200 Sensor input card for analogue contacting conductivity sensors (9013000)	SC 200 Sensor input card for analogue inductive conductivity sensors (9013000)	SC 200 Sensor input card mA IN signals (9012800)
Measuring ranges pH	-2.0 to 14.0 pH -2.00 to 14.00 pH			
Measuring range ORP	-2100 to 2100 mV			
Measuring ranges conductivity		0 to 2.000 µS/cm 0 to 20.00 µS/cm 0 to 200.0 µS/cm 0 to 2000 µS/cm 0 to 2.000 mS/cm 0 to 20.00 mS/cm 0 to 200.0 mS/cm	0 to 200.0 µS/cm 0 to 2000 µS/cm 0 to 2.000 mS/cm 0 to 20.00 mS/cm 0 to 200.0 mS/cm 0 to 2000 mS/cm 0 to 2.000 S/cm	
Measuring ranges resistivity		0 to 19.99 MΩcm 0 to 999.9 kΩcm		
Measuring ranges concentration			0 to 99.99 % 0 to 200.0 %	
Measuring ranges TDS		0 to 9999 ppm 0 to 9999 ppb	0 to 9999 ppm	
Signal range				0 to 25 mA
Repeatability	± 0.1 % of range	0 to 20 µS/cm, K=1: ± 0.02 µS/cm 20 to 200,000 µS/cm, K=1: ± 0.1 % of reading	> 500 µS/cm: ± 0.5 % of reading < 500 µS/cm: ± 2.5 µS/cm	
Response times	0.5 s	0.5 s	1 s	
Temperature ranges	PT100 / PT1000 -20 to 200°C NTC300 -20 to 110 °C Manual -25 to 400 °C	-20 to 200 °C	-20 to 200 °C	
Temperature accuracy	± 0.5 °C	± 0.5 °C	± 0.5 °C	
Temperature drifts	± 0.03 % of reading / °C	> 20 µS/cm: ± 0.02 % of reading / °C	> 500 µS/cm: ± 0.02 % of reading / °C	
Temperature compensation	Automatic from -20 to 110°C or manual	Automatic from -20 to 200 °C or manual	Automatic from -20 to 200°C or manual	
Temperature sensors	PT100 / PT1000 / NTC300	PT100 / PT1000	PT1000	
Temperature compensation curves	Nernst, Pure Water: Ammonium, Morpholine, user defined (linear)	Linear, Ammonium, Natural Water, user defined, none	Linear, Natural Water, user defined, none. Available curves depend on the selected type of measurement (Conductivity, Concentration or TDS).	
Sensor to controller distances (maximal)	pHD sensor: 914 m pH combination electrode with pre-amplifier: 300 m pH combination electrode without pre-amplifier: 30 m (depending on environment this distance is shorter)	Max. length: 91 m	Full-scale value 200 to 2,000 µS/cm max. length: 61 m Full-scale value 2,000 to 2,000,000 µS/cm max. length: 91 m	
Concentration curves			H_3PO_4: 0-40% HCl: 0-18% HCl: 22-36% NaOH: 0-16% $CaCl_2$: 0-22% HNO_3: 0-28% HNO_3: 36-96% H_2SO_4: 0-30% H_2SO_4: 40-80%	
Calibration methods	2-point buffer (pH only) 1-point buffer (pH only) 2-point sample (pH only) 1-point sample (pH and ORP)	Zero GLI DRY-CAL 1-point sample	Zero 1-point Cond (or Concentration or TDS)	

Subject to change without notice.

SC 200 Digital 2-channel Controller

Parameters and applicable sensors

Parameters	Digital sensors
Ammonium	AMTAX sc
	AMTAX indoor sc
	NH4D sc
	AN-ISE sc
Chlorine	9184 sc
	CLF10 / CLT10 sc
Chlorine dioxide	9187 sc
Conductivity	3798-S sc
Dissolved oxygen	LDO
	5740 sc
Nitrate	NITRATAX clear sc
	NITRATAX plus sc
	NITRATAX eco sc
	NO3D sc
	AN-ISE sc
Oil in water	FP360 sc
Organics	UVAS sc
Ozone	9185 sc
pH/ORP	pHD sc
	1200-S sc
Phosphate	PHOSPHAX sc
	PHOSPHAX indoor sc
Sludge level	SONATAX sc
Suspended solids	TSS sc
	TSS HT sc
	TSS VARI sc
	TSS XL sc
	TSS Titan 2 sc
	TSS Titan 7 sc

Parameters	Digital sensors
Suspended solids/turbidity, high resolution	SOLITAX ts-line sc
	SOLITAX t-line sc
	SOLITAX hs-line sc
	SOLITAX inline sc
	SOLITAX highline sc
Turbidity, high resolution	SS7 sc
Turbidity, low resolution	ULTRATURB sc
	ULTRATURB plus sc
	1720E
Turbidity, ultra low resolution	FT660 sc

Parameters	Analogue sensors
Conductivity	GLI 3400 series
	GLI 3700 series
	POLYMETRON 831X series
pH/ORP	pHD
	pH combination electrodes

SC 200 configuration

Power supply
- **0** Without power cord
- **2** EU power cord
- **3** UK power cord
- **4** Swiss power cord
- **7** 24 VDC

Communications Output
- **0** 2 x 0/4-20mA Outputs
- **1** MODBUS 232 & 485
- **3** PROFIBUS DP

Sensor Input 1
- **5** Digital (all SC sensors)
- **1** Analogue: pH / ORP / DO
- **2** Analogue: Conductivity
- **4** mA Input

Sensor Input 2
- **0** None
- **5** Digital (all SC sensors)
- **1** Analogue: pH / ORP / DO
- **2** Analogue: Conductivity
- **4** mA Input

Important:
"Sensor Input 1" has to be bigger than the "Sensor Input 2" ID
- Example: Correct = LXV404.99.xx501,
Wrong = LXV404.99.xx051

L	X	V	4	0	4	.	9	9	.					1

DOC053.52.35003.Oct10

Subject to change without notice.

HACH LANGE LTD
Pacific Way
Salford
GB-Manchester, M50 1DL
Tel. +44 (0)161 8721487
Fax +44 (0)161 8487324
info@hach-lange.co.uk
www.hach-lange.co.uk

Phone: (0161) 872 14 87

HACH LANGE

UNITED FOR WATER QUALITY

Chapter 2.13

Technical Literature - Temperature Transmitter

© Siemens AG 2013

Dimensional drawings

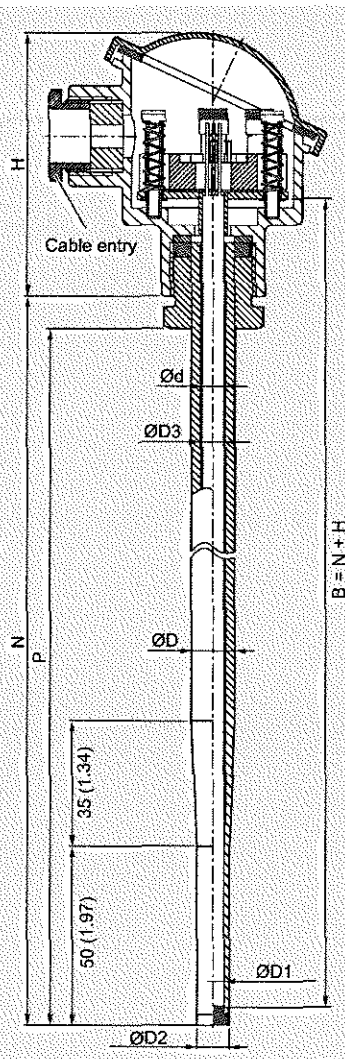

B	Measuring insert length
Ød	Measuring insert outer diameter (6 (0.24))
ØD	Process connection outer diameter
ØD1	Tip internal diameter
ØD2	Tip outer diameter
ØD3	Thermowell diameter
H	Head height
H_1	Typ Axx> 41 (1.61) Typ Bxx> 26 (1.02)
N	Nominal length
P	Space for process connection

SITRANS TS500, temperature sensors for vessel and pipings, tubular version for minimum to medium stress, without process connection, without extension, plug-in or use with moveable compression fitting, dimension in mm (inch)

© Siemens AG 2013

Selection and Ordering data	Article No.				Ord. Code
SITRANS TS500	**7MC751-**				
Tubular version for minimal to medium stress, thermowell per DIN 43722, Type 3, without process connection, improved response time, plug-in or use with moveable compression fittings	■ -	■■■■■ -	■■■■		■■■
Material, in contact with media					
316Ti (1.4571)	1				
316L (1.4404)	2				
Special version, enter thermowell material in plain text	8				
Process connection					
Without process connection (for compression joints) N=U		0 N			
Special version		9 X			H 1 Y
Thermowell form					
3, 12/9 mm (0.47/0.35 inch)		K			
Special version, enter thermowell form in plain text		Z			K 1 Y
Insertion length U (=N), Standard					
160 mm (6.3 inch)			0 4		
220 mm (8.66 inch)			0 7		
280 mm (11.02 inch)			1 3		
Insertion length U (=N), customer-specific					
enter customer specific length with Y44, see page 2/143 Order Codes					
80 ... 100 mm (3.15 ... 3.94 inch)			0 1		
Standard: 100 mm (3.94 inch)					
101 ... 120 mm (3.98 ... 4.72 inch)			0 2		
Standard: 120 mm (4.72 inch)					
121 ... 140 mm (4.76 ... 5.51 inch)			0 3		
Standard: 140 mm (5.51 inch)					
141 ... 160 mm (5.55 ... 6.30 inch)			0 4		
Standard: 160 mm (6.3 inch)					
161 ... 180 (6.34 ... 7.09 inch)			0 5		
Standard: 180 mm (7.09)					
181 ... 200 (7.13 ... 7.87 inch)			0 6		
Standard: 200 mm (7.87 inch)					
201 ... 220 (7.91 ... 8.66 inch)			0 7		
Standard: 220 mm (8.66 inch)					
221 ... 240 (8.7 ... 9.45 inch)			1 1		
Standard: 225 mm (8.86 inch)					
241 ... 260 (9.48 ... 10.24 inch)			1 2		
Standard: 250 mm (9.84 inch)					
261 ... 280 (10.28 ... 11.02 inch)			1 3		
Standard: 280 mm (11.02 inch)					
281 ... 300 (11.02 ... 11.81 inch)			1 4		
Standard: 285 mm (11.22 inch)					
301 ... 320 (11.85 ... 12.6 inch)			1 5		
Standard: 315 mm (12.4 inch)					
321 ... 340 (12.64 ... 13.39 inch)			1 6		
Standard: 340 mm (13.39 inch)					
341 ... 360 (13.43 ... 14.17 inch)			2 0		
Standard: 360 mm (14.17 inch)					
361 ... 380 (14.21 ... 14.96 inch)			2 1		
Standard: 380 mm (14.96 inch)					

Selection and Ordering data	Article No.				Ord. Code
SITRANS TS500	**7MC751-**				
Tubular version for minimal to medium stress, thermowell per DIN 43722, Type 3, without process connection, improved response time, plug-in or use with moveable compression fittings	■ -	■■■■■ -	■■■■		■■■
381 ... 400 (15 ... 15.75 inch)			2 2		
Standard: 400 mm (15.75 inch)					
401 ... 420 (15.79 ... 16.54 inch)			2 3		
Standard: 420 mm (16.54 inch)					
421 ... 440 (16.57 ... 17.32 inch)			2 4		
Standard: 440 mm (17.32 inch)					
441 ... 460 (17.36 ... 18.11 inch)			2 5		
Standard: 460 mm (18.11 inch)					
461 ... 480 (18.15 ... 18.90 inch)			2 6		
Standard: 465 mm (18.30 inch)					
481 ... 500 (18.94 ... 19.68 inch)			2 7		
Standard: 500 mm (19.68 inch)					
501 ... 550 (19.72 ... 21.65 inch)			3 1		
Standard: 510 mm (20.08 inch)					
551 ... 600 (21.69 ... 23.62 inch)			3 2		
Standard: 600 mm (23.62 inch)					
601 ... 650 (23.66 ... 25.59 inch)			3 3		
Standard: 650 mm (25.59 inch)					
651 ... 700 (25.63 ... 27.56 inch)			3 4		
Standard: 700 mm (27.56 inch)					
701 ... 750 (27.6 ... 29.53 inch)			3 5		
Standard: 750 mm (29.53 inch)					
751 ... 800 (29.57 ... 31.50 inch)			3 6		
Standard: 800 mm (31.50 inch)					
Extension					
Standard length for Type 2 as per DIN 43722 (without extension N=U)				0	

Additional configurations on page after next page!

You find ordering examples on page 2/107!

© Siemens AG 2013

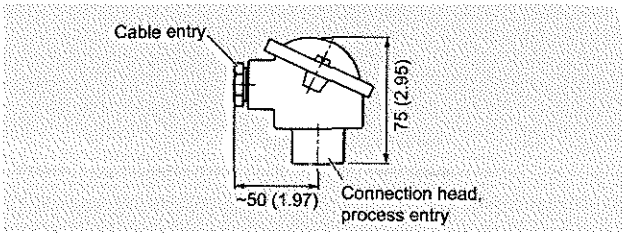

Connection head, aluminum, Type BA0, dimensions in mm (inch)

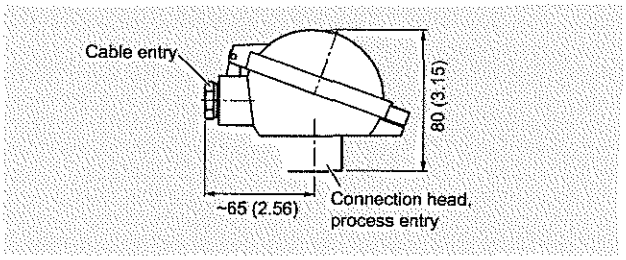

Connection head, aluminum, Type BB0, dimensions in mm (inch)

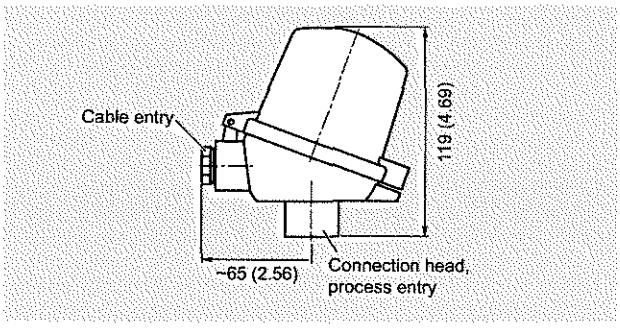

Connection head, aluminum, Type BC0, plastic, type BP0, dimensions in mm (inch)

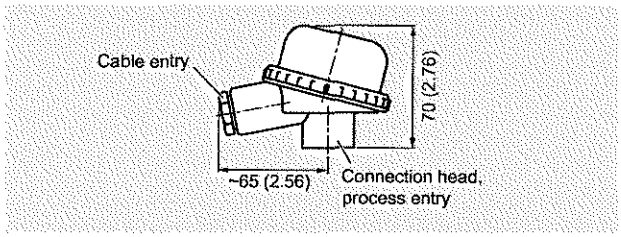

Connection head, plastic, Type BM0, dimensions in mm (inch)

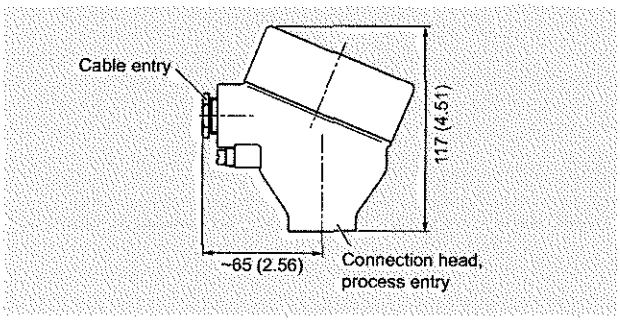

Connection head, aluminum, Type AG0, stainless steel, Type AU0, dimensions in mm (inch)

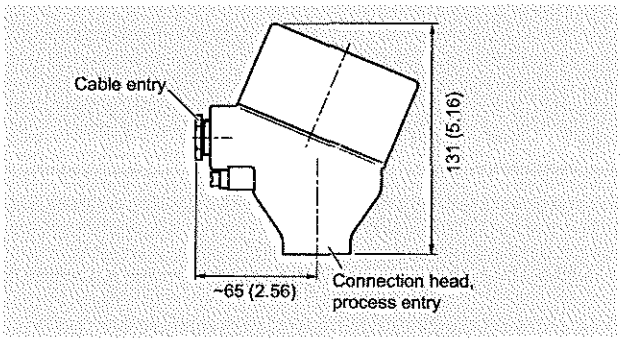

Connection head with display and glass lid, aluminum, Type AH0, stainless steel, Type AV0, dimensions in mm (inch)

© Siemens AG 2013

Selection and Ordering data	Article No.	Ord. Code	
SITRANS TS500	**7MC751-**		
Tubular version for minimal to medium stress, thermowell as per DIN 43722, Type 3, without process connection, improved response time, plug-in or use with moveable compression fittings	■ - ■■■■■ - ■■■■		■■■
Head			
Aluminum head, BA0, flange cover, Standard		A	
Aluminum head, BB0, low hinged cover, screw connection		B	
Aluminum head, BC0, high hinged cover, screw connection		C	
Aluminum head, AG0, screw cover, suitable for Ex d		G	
Aluminum head, AH0, screw cover, suitable for Ex d, display (not for Ex i)		H	
Plastic head, BM0, screw cover		M	
Plastic head, BP0high hinged cover, screw connection		P	
Stainless steel head, AU0, screw cover, Ex d		U	
Stainless steel head, AV0, screw cover, suitable for Ex d, display (not for Ex i)		V	
Special version of connection head		Z	P 1 Y
Sensor			
Pt100, basis, -50 ... +400 °C (-58 ... +752 °F)		A	
Pt100, vibration-resistant, -50 ... +400 °C (-58 ... +752 °F)		B	
Pt100, expanded range, -196 ... +600 °C (-321 ... +1112 °F)		C	
Thermocouple Type J, only class 2, -40 ... +750 °C (-40 ... +1 382 °F)		J	
Thermocouple Type K, -40 .. . +1 000 °C (-40 ... +1 832 °F)		K	
Thermocouple Type N, -40 ... +1 000 °C (-40 ... +1 832 °F)		N	
Sensor number/Accuracy			
Single, basic accuracy (Class 2/Class B)		1	
Single, increased accuracy (Class 1/Class A)		2	
Single, highest accuracy (Class AA)		3	
Double, basic accuracy (Class 2/Class B)		5	
Double, increased accuracy (Class 1/Class A)		6	
Double, highest accuracy (Class AA)		7	
Special version for sensor and accuracy - to be specified		Z 0	Q 1 Y

Selection and Ordering data	Order code
Further designs	
Add "-Z" to Article No. and specify Order Code.	
Enter thermowell material in plain text	G1Y
Enter process connection in plain text	H1Y
Enter thermowell form in plain text	K1Y
Insertion length customer-specific Select range, enter desired length in plain text (No entry = standard length)	Y44
Head Enter connection head in plain text	P1Y
Sensor number/Accuracy Enter connection head in plain text	Q1Y

Selection and Ordering data	Order code
Options	
Add "-Z" to Article No. and add options, separate extensions with "+".	
Built-in head transmitter	
SITRANS TH100, 4 ... 20 mA, Pt100	T10
SITRANS TH100 Ex i (ATEX), 4 ... 20 mA, Pt100	T11
SITRANS TH100 Ex i (FM), 4 ... 20 mA, Pt100	T13
SITRANS TH200, 4 ... 20 mA, Universal	T20
SITRANS TH200 Ex (ATEX), 4 ... 20 mA, Universal	T21
SITRANS TH200 Ex (FM), 4 ... 20 mA, Universal	T23
SITRANS TH300, HART, Universal	T30
SITRANS TH300 Ex (ATEX), HART, Universal	T31
SITRANS TH300 Ex (FM), HART, Universal	T33
SITRANS TH400 PA, Universal	T40
SITRANS TH400 PA Ex, Universal	T41
SITRANS TH400 FF, Universal	T45
SITRANS TH400 FF Ex, Universal	T46
Explosion protection	
Intrinsic safety "ia", "ic"	E01
Flameproof enclosure "d"; Dust protection by enclosures "t" only in combination with connection heads code AG0, AH0, AU0, AV0, without cable gland	E03
Non sparking "n"	E04
Certificates and approvals	
EN10204-3.1 Inspection certificate for materials coming into contact with media	C12
EN10204-3.1 Inspection certificate for hydrostatic pressure test	C31
EN10204-3.1 Inspection certificate for helium leak test	C32
EN10204-3.1 Inspection certificate for surface tear test	C33
EN10204-3.1 Inspection certificate: visual, measurement and functional inspection	C34
NACE Standard MR-01-75 compliance	C50
ISO 9001 grease-free (cleaned for e.g. oxygen applications)	C51
Designation, calibration	
Stainless steel TAG plate , enter lettering in plain text	Y15
Plant calibration per 1 point, enter temperature in plain text	Y33
Transmitter options	
Transmitter, enter complete setting in plain text (Y01:+/-NNNN ... +/-NNNN C,F)	Y01
Enter measuring point (max. 8 characters) in plain text	Y17
Transmitter, enter measuring point description (max. 16 characters) in plain text	Y23
Transmitter, enter measuring point text (max. 32 characters) in plain text	Y24
Transmitter, enter bus address in plain text	Y25
Transmitter, fail-safe value 3.6 mA (instead of 22.8 mA)	U36
Transmitter with a SIL 2 conformity	C20
Transmitter with a SIL 2/3 conformity	C23
Transmitter test protocol (5 points)	C11
Further options	
Connection form, flying leads (for the direct transmitter assembly, delivery without screws and springs)	G01
M12 plug(in combination with 1x Pt100 and/or transmitter , Non-Ex)	G12
Harting plug Han 7 D (Non Ex)	G13
Connection head with ½" NPT thread without cable gland	G20
Plastic cable gland	G21
with spring lock for heads BB0 and BC0	A01
with outer earth screw for heads AG0, AH0, AU0 and AV0	A02
with inner earth screw for heads BC0, AG0, AH0, AU0 and AV0	A03
Compression joint G½", enclosed	A31
Compression joint NPT½", enclosed	A32
Option not found?	
Specify special version in plain text	Y99

You find ordering examples on page 2/107!

© Siemens AG 2013

Dimensional drawings

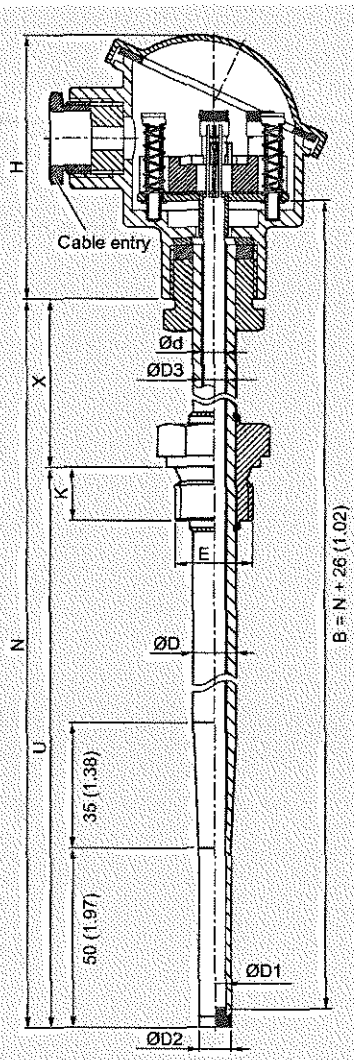

B	Measuring insert length
Ød	Measuring insert outer diameter (6 (0.24))
ØD	Process connection outer diameter
ØD1	Tip internal diameter
ØD2	Tip outer diameter
ØD3	Thermowell internal diameter
E	Process connection, thread size
H	Head height
K	Screw depth
N	Nominal length
U	Insertion length
X	Extension length

SITRANS TS500, temperature sensors for vessels and pipelines, tubular version for minimal to minimum to medium stress, thermowell as per DIN 43722, Type 3G, screwed in, with extension, dimensions in mm (inch)

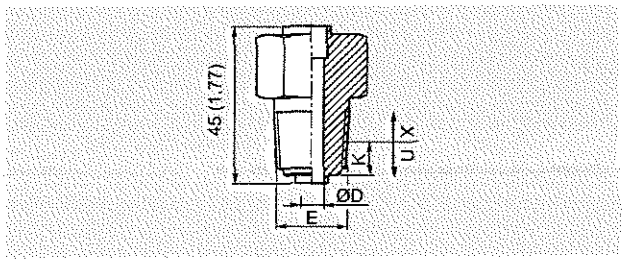

Tapered process connection, dimensions in mm (inch)

© Siemens AG 2013

Selection and Ordering data	Article No.	Ord. Code
SITRANS TS500	**7MC751-**	
Tubular thermowell, minimal to medium stress, thermowell as per DIN 43722, Type 3G, screwed in, with extension	■ - ■■■■■ - ■■■■	■■■
Material, in contact with media		
316Ti (1.4571)	1	
316L (1.4404)	2	
Special version	6	
Process connection		
Cylindrical: G½" inch (½" BSPF)	1 C	
Cylindrical: G1" inch (1" BSPF)	1 E	
Tapered: NPT½"	1 J	
Special version	9 X	H 1 Y
Thermowell form		
3G, 12/9 mm (0.47/0.35 inch)	K	
Special version	Z	K 1 Y
Insertion length U standard		
160 mm (6.30 inch)	0 4	
220 mm (8.66 inch)	0 7	
280 mm (11.02 inch)	1 3	
Insertion length U customer-specific		
enter customer specific length with Y44, see page 2/147 Order Codes		
80 ... 100 mm (3.15 ... 3.94 inch) Standard: 100 mm (3.94 inch)	0 1	
101 ... 120 mm (3.98 ... 4.72 inch) Standard: 120 mm (4.72 inch)	0 2	
121 ... 140 mm (4.76 ... 5.51 inch) Standard: 140 mm (5.51 inch)	0 3	
141 ... 160 mm (5.55 ... 6.30 inch) Standard: 160 mm (6.30 inch)	0 4	
161 ... 180 mm (6.34 ... 7.09 inch) Standard: 180 mm (7.09 inch)	0 5	
181 ... 200 mm (7.13 ... 7.87 inch) Standard: 200 mm (7.87 inch)	0 6	
201 ... 220 mm (7.91 ... 8.66 inch) Standard: 220 mm (8.66 inch)	0 7	
221...240 mm (8.70 ... 9.45 inch) Standard: 225 mm (8.86 inch)	1 1	
241...260 mm (9.49 ... 10.24 inch) Standard: 250 mm (9.84 inch)	1 2	
261...280 mm (10.28 ...11.02 inch) Standard: 280 mm (11.02 inch)	1 3	
281...300 mm (11.06 ... 11.81 inch) Standard: 285 mm 11.22 inch)	1 4	
301...320 mm (11.85 ... 13.00 inch) Standard: 315 mm (12.40 inch)	1 5	
321...340 mm (12.64 ... 13.39 inch) Standard: 340 mm (13.39 inch)	1 6	
341...360 mm (13.43 ... 14.17 inch) Standard: 360 mm (14.17 inch)	2 0	
361...380 mm (14.21 ... 14.96 inch) Standard: 380 mm (14.96 inch)	2 1	
381...400 mm (14.99 ... 15.75 inch) Standard: 400 mm (15.75 inch)	2 2	
401...420 mm (15.79 ... 16.54 inch) Standard: 420 mm (16.54 inch)	2 3	
421...440 mm (16.57 ... 17.32 inch) Standard: 440 mm (17.32 inch)	2 4	
441...460 mm (17.36 ... 18.11 inch) Standard: 460 mm (18.11 inch)	2 5	
461...480 mm (18.15 ... 1890 inch) Standard: 465 mm (1830 inch)	2 6	
481...500 mm (18.94 ... 19.69 inch) Standard: 500 mm (19.69 inch)	2 7	

Selection and Ordering data	Article No.	Ord. Code
SITRANS TS500	**7MC751-**	
Tubular thermowell, minimal to medium stress, thermowell as per DIN 43722, Type 3G, screwed in, with extension	■ - ■■■■■ - ■■■■	■■■
Insertion length U special length		
Special length 1 500 ... 6 000 mm (59.05 ... 236.22 inch)	8 0	
Extension X		
Standard length for Type 2G DIN 43772 (X=131 mm (5.08 inch))	1	
Extension length - customer specific		
enter customer specific length with Y45, see page 2/147 Order Codes		
45 ...150 mm (1.77 ... 5.91 inch) Standard: 150 mm (5.91 inch)	9	N 1 D
151 ... 300 mm (5.95 ... 11.81 inch) Standard: 300 mm (11.81 inch)	9	N 2 D

Additional configurations on page after next page!

You find ordering examples on page 2/107!

© Siemens AG 2013

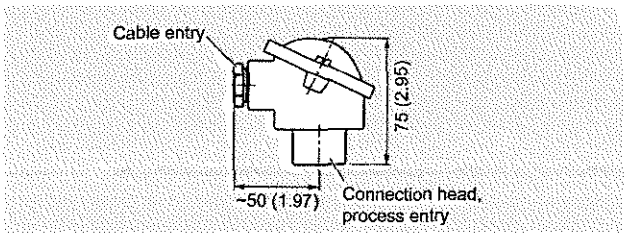

Connection head, aluminum, Type BA0, dimensions in mm (inch)

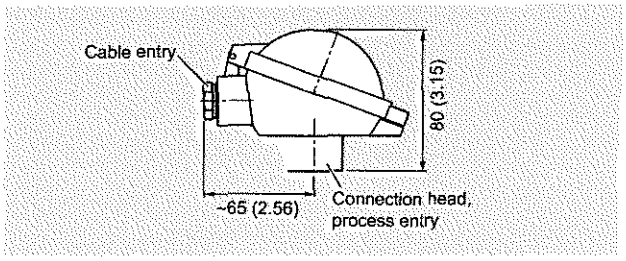

Connection head, aluminum, Type BB0, dimensions in mm (inch)

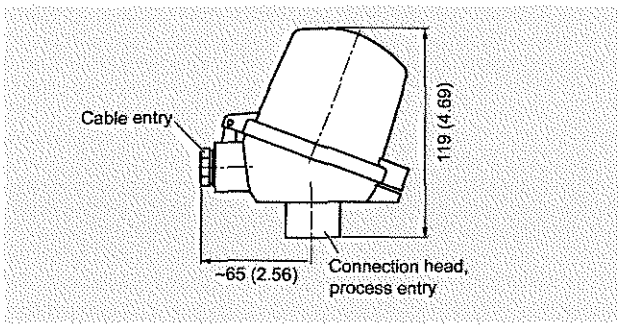

Connection head, aluminum, Type BC0, plastic, type BP0, dimensions in mm (inch)

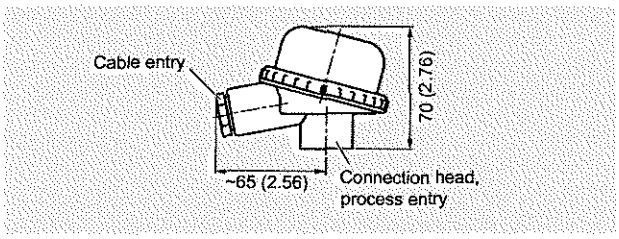

Connection head, plastic, Type BM0, dimensions in mm (inch)

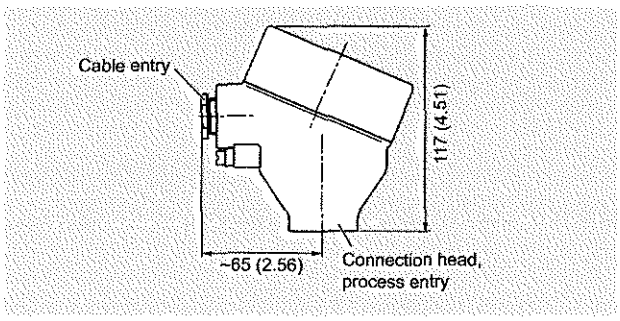

Connection head, aluminum, Type AG0, stainless steel, Type AU0, dimensions in mm (inch)

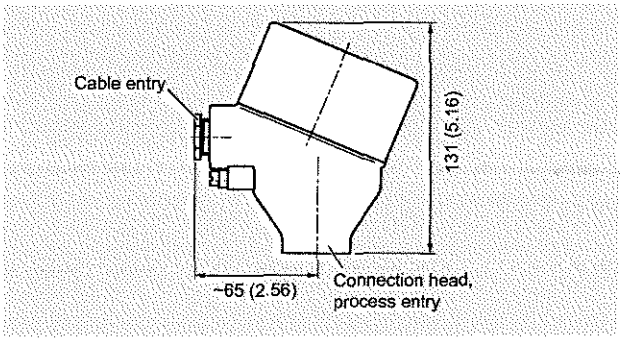

Connection head with display and glass lid, aluminum, Type AH0, stainless steel, Type AV0, dimensions in mm (inch)

© Siemens AG 2013

Selection and Ordering data	Article No.	Ord. Code
SITRANS TS500 **Tubular thermowell, minimal to medium stress, thermowell as per DIN 43722, Type 3G, screwed in, with extension**	**7MC751-** ■ - ■■■■■ - ■■■■ ■■■	
Head		
Aluminum head, BA0, flange cover, Standard		A
Aluminum head, BB0, low hinged cover, screw connection		B
Aluminum head, BC0, high hinged cover, screw connection		C
Aluminum head, AG0, screw cover, suitable for Ex d		G
Aluminum head, AH0, screw cover, suitable for Ex d, display (not for Ex i)		H
Plastic head, BM0, screw cover		M
Plastic head, BP0high hinged cover, screw connection		P
Stainless steel head, AU0, screw cover, Ex d		U
Stainless steel head, screw cover, Ex d, display (not for Ex i)		V
Special version of connection head		Z P 1 Y
Sensor		
Pt100, basis, -50 ... +400 °C (-58 ... +752 °F)		A
Pt100, vibration resistant, -50 ... +400 °C (-58 ... +752 °F)		B
Pt100, expanded range, -196 ... +600 °C (-321 ... 1112 °F)		C
Thermocouple Type J, only class 2, -40 ... +750 °C (-40 ... +1 382 °F)		J
Thermocouple Type K, -40 .. . +1 000 °C (-40 ... +1 832 °F)		K
Thermocouple Type N, -40 ... + 000 °C (-40 ... +1 832 °F)		N
Sensor number/Accuracy		
Single, basic accuracy (Class 2/Class B)		1
Single, increased accuracy (Class 1/Class A)		2
Single, highest accuracy (Class AA)		3
Double, basic accuracy (Class 2/Class B)		5
Double, increased accuracy (Class 1/Class A)		6
Double, highest accuracy (Class AA)		7
Special version for sensor and accuracy - to be specified		Z 0 Q 1 Y

Selection and Ordering data	Order code
Further designs Add **"-Z"** to Article No. and specify Order Code.	
Enter thermowell material in plain text	G1Y
Enter process connection in plain text	H1Y
Enter thermowell form in plain text	K1Y
Insertion length customer-specific Select range, enter desired length in plain text (No entry = standard length)	Y44
Extension length customer-specific Select range, enter desired length in plain text (No entry = standard length)	Y45
Special version of extension Special version of extension, enter form and length in plain text	N9Y
Head Enter connection head in plain text	P1Y
Sensor number/Accuracy Enter connection head in plain text	Q1Y

Selection and Ordering data	Order code
Options Add **"-Z"** to Article No. and add options, separate extensions with "+".	
Built-in head transmitter	
SITRANS TH100, 4 ... 20 mA, Pt100	T10
SITRANS TH100 Ex i (ATEX), 4 ... 20 mA, Pt100	T11
SITRANS TH100 Ex i (FM), 4 ... 20 mA, Pt100	T13
SITRANS TH200, 4 ... 20 mA, Universal	T20
SITRANS TH200 Ex (ATEX), 4 ... 20 mA, Universal	T21
SITRANS TH200 Ex (FM), 4 ... 20 mA, Universal	T23
SITRANS TH300, HART, Universal	T30
SITRANS TH300 Ex (ATEX), HART, Universal	T31
SITRANS TH300 Ex (FM), HART, Universal	T33
SITRANS TH400 PA, Universal	T40
SITRANS TH400 PA Ex, Universal	T41
SITRANS TH400 FF, Universal	T45
SITRANS TH400 FF Ex, Universal	T46
Explosion protection	
Intrinsic safety "ia", "ic"	E01
Flameproof enclosure "d"; Dust protection by enclosures "t" only in combination with connection heads code AG0, AH0, AU0, AV0, without cable gland	E03
Non sparking "n"	E04
Certificates and approvals	
EN10204-3.1 Inspeciton certificate for materials coming into contact with media	C12
EN10204-3.1 Inspection certificate for hydrostatic pressure test	C31
EN10204-3.1 Inspection certificate for helium leak test	C32
EN10204-3.1 Inspection certificate for surface tear test	C33
EN10204-3.1 Inspectiont certificate: visual, measurement and functional inspection	C34
NACE Standard MR-01-75 compliance	C50
ISO 9001 grease-free (cleaned for e.g. oxygen applications)	C51
Designation, calibration	
Stainless steel TAG plate , enter lettering in plain text	Y15
Plant calibration per 1 point, enter temperature in plain text	Y33
Transmitter options	
Transmitter, enter complete setting in plain text (Y01:+/-NNNN ... +/-NNNN C,F)	Y01
Enter measuring point (max. 8 characters) in plain text	Y17
Transmitter, enter measuring point description (max. 16 characters) in plain text	Y23
Transmitter, enter measuring point text (max. 32 characters) in plain text	Y24
Transmitter, enter bus address in plain text	Y25
Transmitter, fail-safe value 3.6 mA (instead of 22.8 mA)	U36
Transmitter with a SIL 2 conformity	C20
Transmitter with a SIL 2/3 conformity	C23
Transmitter test protocol (5 points)	C11
Further options	
Connection form, flying leads (for the direct transmitter assembly, delivery without screws and springs)	G01
M12 plug (in combination with 1x Pt100 and/or transmitter , Non-Ex)	G12
Harting plug Han 7 D (Non Ex)	G13
Connection head with ½" NPT thread without cable gland	G20
Plastic cable gland	G21
with spring lock for heads BB0 and BC0	A01
with outer earth screw for heads AG0, AH0, AU0 and AV0	A02
with inner earth screw for heads BC0, AG0, AH0, AU0 and AV0	A03
Option not found?	
Specify special version in plain text	Y99

You find ordering examples on page 2/107!

© Siemens AG 2013

Dimensional drawings

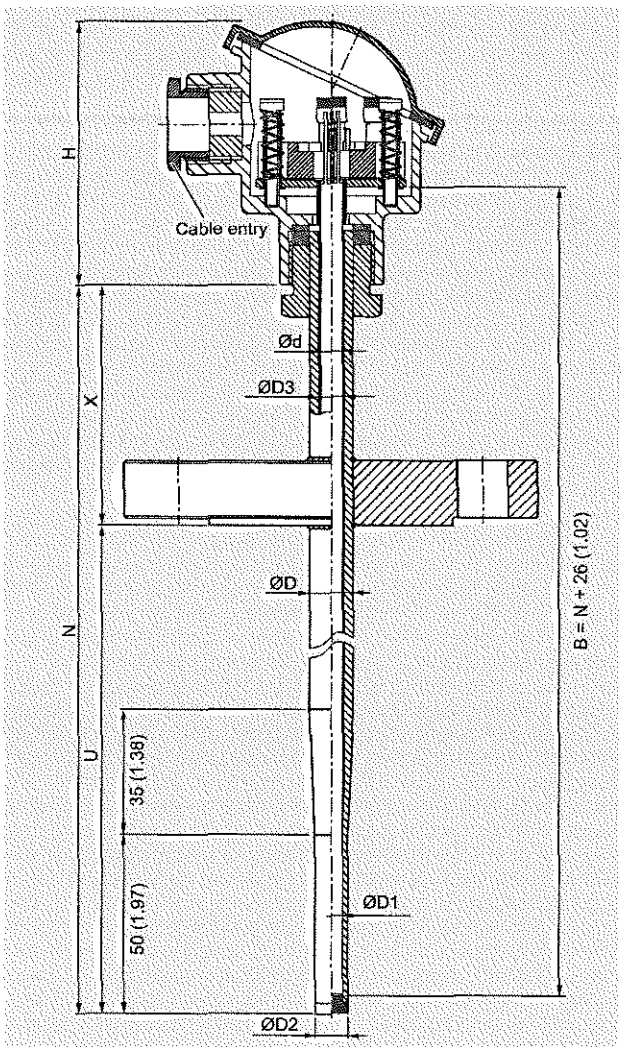

B	Measuring insert length
Ød	Measuring insert outer diameter (6 (0.24))
ØD	Process connection outer diameter
ØD1	Tip internal diameter
ØD2	Tip outer diameter
ØD3	Thermowell internal diameter
H	Head height
N	Nominal length
U	Insertion length
X	Extension length

SITRANS TS500, temperature sensors for vessels and pipelines, tubular version for minimal to minimum to medium stress, thermowell as per DIN 43722, Type 3F, with flange, with extension, dimensions in mm (inch)

© Siemens AG 2013

Selection and Ordering data	Article No.	Ord. Code
SITRANS TS500	**7MC751-**	
Tubular thermowell, minimal to medium stress, thermowell as per DIN 43722, Type 3F, with flange, with extension	■ - ■■■■■ - ■■■■	■■■
Material, in contact with media		
316Ti (1.4571)	1	
316L (1.4404)	2	
Special version	8	
Process connection		
Flange EN; DN25PN40 B1	2 A	
Flange ASME; 1"RF150	2 E	
Flange ASME; 1.5"RF150	2 G	
Flange ASME; 1.5"RF300	2 H	
Special version	9 X	H 1 Y
Thermowell form		
3F; 12/9 mm (0.47/0.35 inch)	K	
Special version	Z	K 1 Y
Insertion length U standard		
225 mm (8.86 inch)	1 1	
285 mm (11.22 inch)	1 4	
345 mm (13.58 inch)	1 7	
Insertion length U customer-specific		
enter customer specific length with Y44, see page 2/151 Order Codes		
80 ... 100 mm (3.15 ... 3.94 inch) Standard: 100 mm (3.94 inch)	0 1	
101 ... 120 mm (3.98 ... 4.72 inch) Standard: 120 mm (4.72 inch)	0 2	
121 ... 140 mm (4.76 ... 5.51 inch) Standard: 140 mm (5.51 inch)	0 3	
141 ... 160 mm (5.55 ... 6.30 inch) Standard: 160 mm (6.3 inch)	0 4	
161 ... 180 (6.34 ... 7.09 inch) Standard: 180 mm (7.09)	0 5	
181 ... 200 (7.13 ... 7.87 inch) Standard: 200 mm (7.87 inch)	0 6	
201 ... 220 (7.91 ... 8.66 inch) Standard: 220 mm (8.66 inch)	0 7	
221 ... 240 (8.7 ... 9.45 inch) Standard: 225 mm (8.86 inch)	1 1	
241 ... 260 (9.48 ... 10.24 inch) Standard: 250 mm (9.84 inch)	1 2	
261 ... 280 (10.28 ... 11.02 inch) Standard: 280 mm (11.02 inch)	1 3	
281 ... 300 (11.02 ... 11.81 inch) Standard: 285 mm (11.22 inch)	1 4	
301 ... 320 (11.85 ... 12.6 inch) Standard: 315 mm (12.4 inch)	1 5	
321 ... 340 (12.64 ... 13.39 inch) Standard: 340 mm (13.39 inch)	1 6	
341 ... 360 (13.43 ... 14.17 inch) Standard: 345 mm (13.58 inch)	1 7	
361 ... 380 (14.21 ... 14.96 inch) Standard: 380 mm (14.96 inch)	2 1	
381 ... 400 (15 ... 15.75 inch) Standard: 400 mm (15.75 inch)	2 2	
401 ... 420 (15.79 ... 16.54 inch) Standard: 420 mm (16.54 inch)	2 3	
421 ... 440 (16.57 ... 17.32 inch) Standard: 440 mm (17.32 inch)	2 4	
441 ... 460 (17.36 ... 18.11 inch) Standard: 460 mm (18.11 inch)	2 5	
461 ... 480 (18.15 ... 18.90 inch) Standard: 465 mm (18.30 inch)	2 6	
481 ... 500 (18.94 ... 19.68 inch) Standard: 500 mm (19.68 inch)	2 7	

Selection and Ordering data	Article No.	Ord. Code
SITRANS TS500	**7MC751-**	
Tubular thermowell, minimal to medium stress, thermowell as per DIN 43722, Type 3F, with flange, with extension	■ - ■■■■■ - ■■■■	■■■
Insertion length U special length		
Special length 1 500 ... 6 000 (59.05 ... 236.22 inch)	8 0	
Extension		
Standard length for Type 2G DIN 43772 (X=66 mm (2.60 inch))	1	
Extension length - customer specific		
enter customer specific length with Y45, see page 2/151 Order Codes		
45 ...150 mm (1.77 ... 5.91 inch) Standard: 150 mm (5.91 inch)	9	N 1 D
151 ... 300 mm (5.95 ... 11.81 inch) Standard: 300 mm (11.81 inch)	9	N 2 D

Additional configurations on page after next page!

You find ordering examples on page 2/107!

© Siemens AG 2013

Type 3F, tubular quick with flange and extension

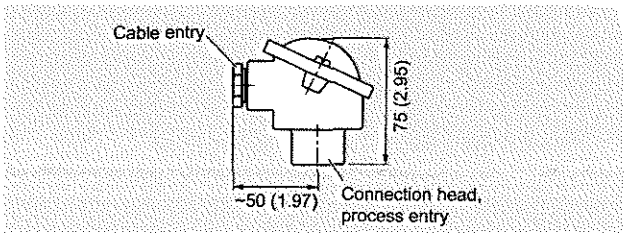

Connection head, aluminum, Type BA0, dimensions in mm (inch)

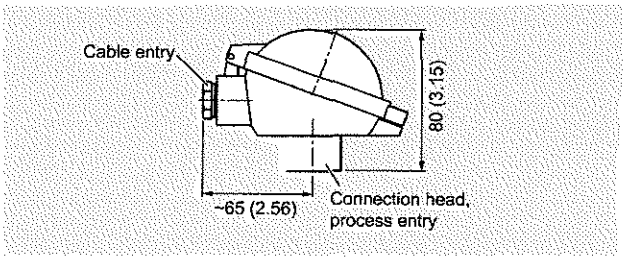

Connection head, aluminum, Type BB0, dimensions in mm (inch)

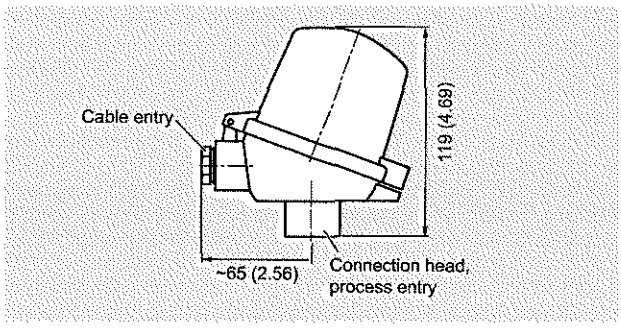

Connection head, aluminum, Type BC0, plastic, type BP0, dimensions in mm (inch)

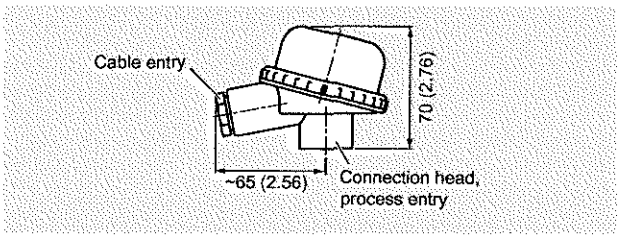

Connection head, plastic, Type BM0, dimensions in mm (inch)

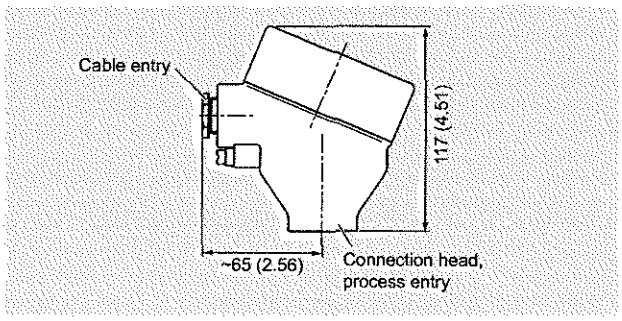

Connection head, aluminum, Type AG0, stainless steel, Type AU0, dimensions in mm (inch)

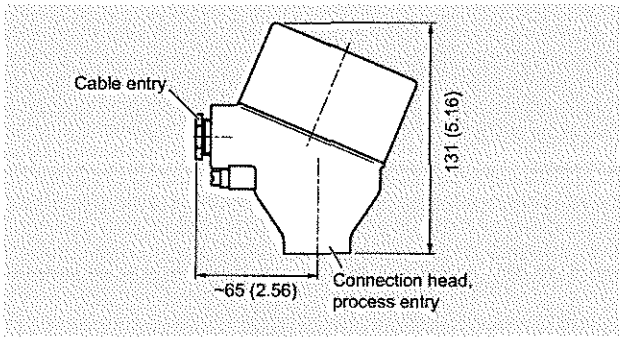

Connection head with display and glass lid, aluminum, Type AH0, stainless steel, Type AV0, dimensions in mm (inch)

© Siemens AG 2013

Selection and Ordering data	Article No.	Ord. Code
SITRANS TS500 **Tubular thermowell, minimal to medium stress, thermowell as per DIN 43722, Type 3F, with flange, with extension**	**7MC751-**	■ - ■■■■■ - ■■■■ ■■■
Head		
Aluminum head, BA0, flange cover, Standard		A
Aluminum head, BB0, low hinged cover, screw connection		B
Aluminum head, BC0, high hinged cover, screw connection		C
Aluminum head, AG0, screw cover, suitable for Ex d		G
Aluminum head, AH0, screw cover, suitable for Ex d, display (not for Ex i)		H
Plastic head, BM0, screw cover		M
Plastic head, BP0high hinged cover, screw connection		P
Stainless steel head, AU0, screw cover, Ex d		U
Stainless steel head, screw cover, Ex d, display (not for Ex i)		V
Special version of connection head		Z P 1 Y
Sensor		
Pt100, basis, -50 ... +400 °C (-58 ... +752 °F)		A
Pt100, vibration.resistant, -50 ... +400 °C (-58 ... +752 °F)		B
Pt100, expanded range, -196 ... +600 °C (-321 ... +1112 °F)		C
Thermocouple Type J, only class 2, -40 ... +750 °C (-40 ... +1 382 °F)		J
Thermocouple Type K, -40 .. . +1 000 °C (-40 ... +1 832 °F)		K
Thermocouple Type N, -40 ... +1 000 °C (-40 ... 1 832 °F)		N
Sensor number/Accuracy		
Single, basic accuracy (Class 2/Class B)		1
Single, increased accuracy (Class 1/Class A)		2
Single, highest accuracy (Class AA)		3
Double, basic accuracy (Class 2/Class B)		5
Double, increased accuracy (Class 1/Class A)		6
Double, highest accuracy (Class AA)		7
Special version of sensor type - number and accuracy - to be specified		Z 0 Q 1 Y

Selection and Ordering data	Order code
Further designs Add "-Z" to Article No. and specify Order Code.	
Enter thermowell material in plain text	G1Y
Enter process connection in plain text	H1Y
Enter thermowell form in plain text	K1Y
Special version of extension Special version of extension, enter form and length in plain text	N9Y
Head Enter connection head in plain text	P1Y
Sensor number/Accuracy Enter connection head in plain text	Q1Y
Insertion length customer-specific Select range, enter desired length in plain text (No entry = standard length)	Y44
Extension length customer-specific Select range, enter desired length in plain text (No entry = standard length)	Y45

Selection and Ordering data	Order code
Options Add "-Z" to Article No. and add options, separate extensions with "+".	
Built-in head transmitter	
SITRANS TH100, 4 ... 20 mA, Pt100	T10
SITRANS TH100 Ex i (ATEX), 4 ... 20 mA, Pt100	T11
SITRANS TH100 Ex i (FM), 4 ... 20 mA, Pt100	T13
SITRANS TH200, 4 ... 20 mA, Universal	T20
SITRANS TH200 Ex (ATEX), 4 ... 20 mA, Universal	T21
SITRANS TH200 Ex (FM), 4 ... 20 mA, Universal	T23
SITRANS TH300, HART, Universal	T30
SITRANS TH300 Ex (ATEX), HART, Universal	T31
SITRANS TH300 Ex (FM), HART, Universal	T33
SITRANS TH400 PA, Universal	T40
SITRANS TH400 PA Ex, Universal	T41
SITRANS TH400 FF, Universal	T45
SITRANS TH400 FF Ex, Universal	T46
Explosion protection	
Intrinsic safety "ia", "ic"	E01
Flameproof enclosure "d"; Dust protection by enclosures "t" only in combination with connection heads code AG0, AH0, AU0, AV0, without cable gland	E03
Non sparking "n"	E04
Certificates and approvals	
EN10204-3.1 Inspection certificate for materials coming into contact with media	C12
EN10204-3.1 Inspection certificate for hydrostatic pressure test	C31
EN10204-3.1 Inspection certificate for helium leak test	C32
EN10204-3.1 Inspection certificate for surface tear test	C33
EN10204-3.1 Inspection certificate: visual, measurement and functional inspection	C34
NACE Standard MR-01-75 compliance	C50
ISO 9001 grease-free (cleaned for e.g. oxygen applications)	C51
Designation, calibration	
Stainless steel TAG plate , enter lettering in plain text	Y15
Plant calibration per 1 point, enter temperature in plain text	Y33
Transmitter options	
Transmitter, enter complete setting in plain text (Y01:+/-NNNN ... +/-NNNN C,F)	Y01
Enter measuring point (max. 8 characters) in plain text	Y17
Transmitter, enter measuring point description (max. 16 characters) in plain text	Y23
Transmitter, enter measuring point text (max. 32 characters) in plain text	Y24
Transmitter, enter bus address in plain text	Y25
Transmitter, fail-safe value 3.6 mA (instead of 22.8 mA)	U36
Transmitter with a SIL 2 conformity	C20
Transmitter with a SIL 2/3 conformity	C23
Transmitter test protocol (5 points)	C11
Further options	
Connection form, flying leads (for the direct transmitter assembly, delivery without screws and springs)	G01
M12 plug (in combination with 1x Pt100 and/or transmitter , Non-Ex)	G12
Harting plug Han 7 D (Non Ex)	G13
Connection head with ½" NPT thread without cable gland	G20
Plastic cable gland	G21
with spring lock for heads BB0 and BC0	A01
with outer earth screw for heads AG0, AH0, AU0 and AV0	A02
with inner earth screw for heads BC0, AG0, AH0, AU0 and AV0	A03
Option not found?	
Specify special version in plain text	Y99

You find ordering examples on page 2/107!

Chapter 1.1

Technical Proposal for PRPS 1

GTC 626/2014
KAHRAMAA – QATAR MEGA RESERVOIRS
PRPS1 Package A at Umm Birka

Control & SCADA System

TECHNICAL PROPOSAL

Reference : 2250/2256/066/Aut/Rev2

Date: 09th Sep, 2014

Issue	Description of Revision	Date	Name	Initial
Rev. 2	Issue for Proposal	09.09.2014	Viral Patel	VP
Rev. 1	Issue for Proposal	10.08.2014	Viral Patel	VP
Rev. 0	Issue for Proposal	07.07.2014	Viral Patel	VP

Table of Contents

1 LIST OF ABBREVIATIONS **3**

2 INTRODUCTION **5**

2.1 REFERENCES 5
2.2 UNITS OF MEASUREMENT 6
2.3 AMBIENT CONDITIONS 6
2.4 SCOPE OF WORK 7
2.4.1 Supply of Control and SCADA system for the PRPS1 ..... *7*
2.4.2 Activities / Services *9*

3 PROJECT EXECUTION **10**

3.1 BASIC ENGINEERING (I&C TASK DESCRIPTION COMPILED BY THE MAIN CONTRACTOR) 10
3.2 RELEASE FOR DETAILED ENGINEERING 10
3.3 CHANGES AFTER DESIGN FREEZE / GENERAL STATEMENT 10
3.4 FACTORY ACCEPTANCE TEST (FAT) 10

4 REMARKS **12**

4.1 ENGINEERING, HARDWARE, SOFTWARE & MANUALS 12
4.2 SYSTEM SIZING 12
4.3 GENERAL SCOPE LIMITS AND EXCLUSIONS 12

5 CONTROL & SCADA SYSTEM **15**

5.1 CONTROL & SCADA SYSTEM 15
5.1.1 Our Process Control System for your I&C Requirements *15*
5.1.2 Acquisition of Field Data and Processing of Signals, Open- and Closed Loop Control *15*
5.1.3 Process Operation and Management *16*
5.1.4 Alarm Signalling and Fault Finding *16*
5.1.5 Automation (PLC) System *16*
5.1.6 PCS 7 Server *17*
5.1.7 Operator Workstations PCS7-OWS *17*
5.1.8 Engineering Station *18*
5.2 LAN / BUS SYSTEM 18
5.3 TIME SYNCHRONIZATION 18
5.4 FINAL DOCUMENTATION 18

1 List Of Abbreviations

AS	Automation System
CC	Central Center
CP	Communication Processor
CPU	Central Processing Unit
CCTV	Closed Circuit Television
DI/O	Distributed Input/ Output
ES	Engineering Station
FAT	Factory Acceptance Test
FO	Fibre Optic
GPS	Global Positioning System
IEC	International Electrotechnical Commission
I&C	Instrument and Control
IEEE	Institute of Electrical and Electronic Engineers Incorporated
I/O	Input/ Output
LAN	Local Area Network
LV	Low Voltage
MC	Main Contractor /EPC
MCC	Motor Control Center
MIGD	Million Gallons per Day
MOV	Motor Operated Valve
MV	Medium Voltage Switchgear
NMS	Network Management System
O&C	Operation and Control
OPC	Object Linking & Embedding for Process Control
OWS	Operator Work Station
PCS7	Process Control System –Siemens
PLC	Programmable Logic Controller
PMP	Pump Monitoring Panel
PRPS	Primary Reservoir Pumping Stations
PS	Pumping Station
QUC	Qatar Utility Corridor
SAT	Site Acceptance Test

SCADA	Supervisory Control and Data Acquisition
SM	Single Mode
UPS	Un-interruptible Power Supply
VMS	Vibration (and temperature) Monitoring System
VoIP	Voice Over Internet Protocol
VLAN	Virtual LAN
WAN	Wide Area Network

2 Introduction

Due to the continuous growth and development in Qatar, and the consequent forecast increase in water demand, Qatar General Electricity & Water Corporation (Kahramaa) is implementing the Water Security Mega Reservoirs Project to provide a minimum of 7 days Strategic Water Storage within its network.

Under the Project, water storage reservoirs will be constructed at five (5) new Primary Reservoir Pumping Stations (PRPS) sites which are located in the vicinity of the Qatar Utility Corridor (QUC) , as follows :

- Package A - PRPS1 at Umm Birka
- Package B - PRPS 2 at Umm Slal
- Package C - PRPS 5 at Al Thumama
- Package D - PRPS 3 at Rawdat Rashed
- Package E - PRPS 4 at Abu Nakhla

The new PRPS sites will be connected to existing and future desalination plants through large diameter pipelines (Corridor Mains) that are to be constructed within the QUC in a separate project.

Water from the PRPS sites will be distributed using a network of Transmission Pipelines.

Kahramaa intends to implement the Mega Reservoir Project under a number of separate contracts for pipeline construction, PRPS site construction and for an integrated SCADA and control system.

This concerned Contract is for the construction of PRPS sites under Packages as desacribed above (Packages A ,B, C, D & E) for the PRPS facility.

This document describes the Siemens offer for control system and SCADA for PRPS1 – Package A at Umm Birka.

2.1 References

We have based this proposal upon the below mentioned main tender documents:

Description / Name of the Document	Document Reference	Revision/Date
Automation Specification	Appendix A Section 8	Rev 2
Scope of Work & Specifications	Appendix A1 – Package A	Rev 2
Instrument Specification	Appendix A Section 6	Rev 1
Automation Drawing List for PRPS1 (SCADA Details, Control Level Schematics, Electrical SCADA, Field Level Schematics, HVAC SCADA)	MQ174-R1-DH-GE-0030 MQ174-R1-DH-GE-0031 MQ174-R1-DH-GE-0032 MQ174-R1-DH-GE-0033	Rev A
P&ID Drawing List for PRPS1	MQ174 -R1-DH-GE-0011	Rev B
Pre-Bid Clarifications 1 to 19		

2.2 Units of Measurement

The following table defines the units to be utilized for the most common properties:

Temperature:	°C
Pressure:	bar
Level:	%
Volume	m^3
Length	mm ,m ,km
Mass	kg
Liquid Flow	m^3/h
Gas Viscosity	mPa.s
Atmospheric Pressure	hPa
Power	kW
Time	sec, Hr
Velocity	m/s
Density	kg/m^3

2.3 Ambient Conditions

The proposed system will meet worldwide-used environmental standards. The equipment itself is capable of performing specified functions under the following conditions:

Ambient temperature	0- 35 °C , for Control Room equipment (such as servers, Monitors, Workstations,,etc) 0- 60 °C , For PLCs, IO modules
Relative Humidity:	5% to 95%, no condensation

2.4 Scope of Work

A detailed description of the Siemens scope of work included in this offer is as follows:

2.4.1 Supply of Control and SCADA system for the PRPS1

Our offer includes following hardware related to Control and SCADA system:

1. Master PLCs - Redundant Hot-Standby PLC (**SIMATIC S7 400-H**). – 5x

   The entire system will be controlled by the Master PLCs which will communicate with pipework PLCs (Local PLCs) and OS Servers.

   The Master PLCs (5x) are for following areas.
   - Ring 1 Main Pump House
   - Ring 2 South of the main pump house
   - Ring 3 North of main pump house
   - Ring 4 West of the main pump house
   - Generator Room

2. Local PLC / Multipurpose controller **(SIMATIC S7 300)** for pipework instrumentation, and Electrical system. – 70x

   Local PLCs are equipped with Interface modules (for expansion rack), signal modules (DI, DO, AI, and AO), DP/PA coupler, DP interface and Ethernet communication processor.

   Signal modules, DP/PA couplers, DP interface will be used for connecting field instruments. Ethernet communication processor will be used for communicating to master PLC via industrial Ethernet switches.

   The entire plant comprises of following four segments. Each segment covers different area/buildings (i.e. surge vessel, chlorination, pumps, reservoir etc). Each area/buildings are having dedicated local PLCs for different tasks.
   - Ring 1 Main Pump House
   - Ring 2 South of the main pump house
   - Ring 3 North of main pump house
   - Ring 4 West of the main pump house

   As per the tender drawing, we have included following total number of modules.
   - Digital Input Module SM321 – 174x
   - Digital Output Module SM322 – 228x
   - Analog Input HART Module SM331 – 104x
   - Analog Input Module SM331 – 43x
   - Analog Output Module SM332 – 20x

   Please refer to "Control System Configuration" (GTC626_PRPS1_SA) for details.

3. Cabinets for PLCs
   The cabinets shall include auxiliaries such as UPS for the PLC, Battery modules, Power Distribution Unit, FO Patch Panel, RJ45 Patch Panels.

4. Local Operator Panel (**TP 1500**) for pipework PLCs. – 24x
   The Local operator panel with touch functionality to provide local operation in case of SCADA failure or maintenance purpose. This will be mounted on front door of control cabinet.

5. Conditioning monitoring PLC for Main pumps and Auxiliary pumps – 16x.
   The Condition monitoring PLC shall be capable of handling 4-20mA signals.

   The vibration sensors and transmitters are not included in our offer and shall be provided by others (e.g. Pump vendors).
   This offer does not include any condition monitoring (Vibration and temperature) systems listed in the Approved vendor list.

6. Process Servers / OS Servers – 2x (Redundant Pair)

   The Redundant OS **(SIMATIC WinCC)** represents the client work stations and receives data from the master PLCs. The acquisition, processing and data management is carried out on the OS servers.
   The server pairs shall be implemented as follows :
   1x redundant Pair of OS servers dedicated for MEP SCADA
   1x redundant Pair of OS servers dedicated for Process SCADA

7. Historian Servers – 1x (Redundant Pair)

   The Redundant historian servers shall be used for long term and short term archives and reporting servers.
   Note : The 100 TB Storage arrays are NOT included in our offer, and the same shall be provided by Others/MC

8. SCADA Clients – 5x

   The SCADA clients shall be used for Operator control and monitoring of the plant with dual monitors. There will be a number of workstation clients as follows :
   SCADA (Process) Runtime clients – 2x
   Energy Runtime Client/ MEP SCADA Client – 2x
   Historian Client – 1x

9. Engineering Station – 2x

   The Engineering station is to configure Siemens control system (i.e. Master PLC, Local PLC, OS Servers, Historian servers and SCADA Client)

10. Network Printers – 2x

11. Industrial Switches for four network rings (Ring 1, Ring 2 , Main Ring 3, Ring 4) – 88x

The entire plant are connected via four fiber optic rings. These fiber rings are connected through industrial Ethernet switches.

12. Industrial Switches for Security CCTV Cameras – 22 x

    The security CCTV Cameras along the PRPS site periphery shall be connected to the Industrial Switches in Ring 3A/3B.

13. GPS Time Synchronization Clock – 1x

    Please refer to "Control System Configuration" (GTC626_PRPS1_SA) for details.

2.4.2 Activities / Services

Our offer includes following activities related to Siemens control system.

1. Basic Engineering
2. Detail Design
3. Factory Acceptance Test
4. Pre-Commissioning and Commissioning / Site Acceptance Test. The estimated number of Man-months required to commission our offered control system is indicated in our Offer.
5. Operator and Maintenance Training to KAHRAMAA staff.

3 Project Execution

3.1 Basic Engineering (I&C task description compiled by the Main Contractor)

The Main-contractor will present the complete I&C task description including Logic Diagrams of the plant process to Siemens at the time of "Design Freeze".

This I&C task description consists of the following documents :

- P&ID's together with detailed measurement list and instrument list including all relevant tag numbers and based on standard software applications (e.g. MS-ACCESS).
- A complete technological task description in the form of Schematics with description for complex closed-loop control (incl. Unit control) and Function diagrams for group- and sub-group control, interlock-, sub-loop- and unit-switch-over control
- Input / Output list and instrument information.
- Approved Operation and Control Philosophy
- Draft designs of process displays for the operating and management system and of report layouts.
- Description of the interface to switchgear, motor control centers, drives, MOV's, FCV's and third party systems such as black boxes, etc.
- Signal data file in form of a Windows application for serial interfaces to foreign systems complete with signal address and data format
- Relevant guidelines, philosophies to be applied

3.2 Release for Detailed Engineering

The detailed I&C task documentation from the main contractor will be presented to siemens at a joint I&C System meeting in order to be approved and released for subsequent detailed engineering to Siemens.

This detailed I&C task documentation approved by the customer presents the contractual basis for all further activities provided by Siemens and will be considered a design freeze for engineering purposes.

3.3 Changes after Design Freeze / General Statement

Additions / deletions or modifications of work in progress following the Design Freeze key date will lead to additional engineering effort to be performed by Siemens. The extent of existing engineering work completed increases from the Design Freeze date, day by day, which implies that changes made to the existing work at a very late stage will result in a larger effort . Siemens reserves its rights to charge the customer for the additional engineering costs incurred due to modifications.

3.4 Factory Acceptance Test (FAT)

On request of the Main Contractor (MC), Siemens will provide an independent acceptance test. Between the main contractor and Siemens a representative number of functional tests will be

selected and Siemens will prepare, execute and document the actual test. Finally MC's approval shall be given in case of successful execution of the test and hand over of the respective test documentation to the Main-contractor.

Within this offer Siemens shall provide:	
Installation of a representative selection of new supplied process control system components at Siemens factory in UAE / Qatar	Yes
Connection of selected I/O	approx. 5 %
Calculated estimated duration of tests performed by qualified engineers	2 weeks with Main Contractor

Siemens shall prepare a project related FAT test procedure for this purpose. This shall be submitted for the approval of the Main-contractor in advance. Once this procedure is approved, the FAT shall be conducted in accordance with this procedure. This test procedure shall include both Visual and functional inspections, for the new systems supplied for this project.

Prior to a Main-contractor witnessed testing, the system will undergo an internal testing. The internal testing will check the following items -

- 100% of the project Hardware
- Project specific Application engineering and Software
- Screens and signal communication between the I/O racks and SCADA screens
- Panel wiring

4 Remarks

4.1 Engineering, Hardware, Software & Manuals

- The prices for engineering and the hardware are based on the I/O list derived from the tender drawings and our experience based on similar projects.

- The complete loop (field instrument - junction box – multi-core cable - marshalling - I/O and Control system) with all numbers, type of cable field instrument and names is not considered in the Siemens documentation. All cable numbers, terminal point, interfaces, cable types are to be predetermined by MC. The Loop drawings are also to be prepared by the main contractor. Siemens shall reflect the relevant signal names in the panel/marshalling cabinet drawings.

- Cabinets are with standard primer and painting (RAL 7035) and protection class IP 31 / IP 41 / IP 54 /IP65 (as required depending on location of installation)

- The required space for cabinets is to be arranged by Main Contractor (buildings , control room , shelters , etc). The required Power cables, is to be provided by the main contractor, at the locations wherever the Cabinets are installed.

4.2 System sizing

- We have made the proposal based on our estimate for the I/O Quantity derived from the Reference documents/drawings. This estimate is as per the sizing of projects of similar nature. Should the I/O count increase for this project, due to whatever reasons, then we reserve the right to modify our prices accordingly.
- However we would like to have a clear scope defined in the frozen P&I drawings, that we expect the main contractor to issue at the start of the project execution phase. Based on this input, we will freeze our IO counts and basic/detailed design of our system can follow.

4.3 General scope limits and exclusions

- The Project is expected to be realised in a time period of approximately 36 months. This is however liable to changes, depending on the project approvals and the number of approval cycles. The time schedule and the quotation consider only one approval cycle.

- We reserve the right to alter prices in the case of changed quantities

- Our scope is limited to the work on the Siemens SCADA System and other systems at locations which are specifically mentioned in the scope of work section of this offer. Interfaces to 3rd party systems shall be done through industry standard protocols such as OPC, Profibus DP etc.

- Any fibre optic cabling/engineering/works/Patch panels at site are excluded.

- Costs for electricity, water, sewage, fences, office containers, workshops, storage area, watchman and other expenses at site are not included.

- Standard and Design Documentation will be supplied in the English language (Electronic Version) .Translation of any submittals and documentation in the Arabic language is not included in our offer.

- Field-Instruments , other than those mentioned in the enclosed Instrumentation List / Instrument BoQ will be supplied by Main-Contractor. Junction boxes in the field will be supplied by Main-Contractor

- Instrument cables between field instrument and junction box including the connection till the PLC cabinets, will be supplied by the Main-Contractor. Engineering for field instruments, junction boxes, cable planning, cable trays, etc will be done by Main-Contractor

- Co-ordination between the various suppliers and other sub-contractors is not in our scope.

- The responsibility for the process and water quality of the project is not in our scope.

- All required site passes, HSE requirements and necessary work permits, access to site are to be provided/arranged by the main contractor

- Alterations after "Design Freeze" including revisions due to process or any other modifications, shall be charged additionally , since to additional efforts will be required to modify the design , is not included in our offer.

- Adjusting or putting into operation of equipment supplied by others , which are not explicitly mentioned in the scope of works (due to guarantee aspects such activities should always be performed by the respective supplier) is not included in our offer.

- Services which have to be provided by authorities and experts such as a technical inspectorate (NRC, TÜV etc. including charges from such authorities) or 3rd party inspectors is not included in our offer.

- Architectural work or interior decoration of control rooms , civil structure works , Mechanical works at site is not included in our offer

- Drawings and Documents Management System is not included in our offer

- Materials & Maintenance Management System is not included in our offer

- 400/230 VAC Incoming Power Supply and Distribution for cabinets / servers/printers,etc is not included in our offer

- Air Conditioning System is not included in our offer

- Control room equipment furniture such as cupboards, tables, etc is not included in our offer
- Grounding / Earthing Structure and Lightning Protection is not included in our offer
- Spare parts for the Control system is not included in our offer

5 Control & SCADA System

5.1 Control & SCADA system

This section presents the general description of the selected I&C Configuration and needs to be read in conjunction with the proposed control system configuration for the project.

Attachment: Control System Configuration for KAHRAMAA – QATAR ELECTRICITY & WATER CORPORATION, WATER SECURITY MEGA RESERVOIRS PACKAGE-A – UMM BIRKA (7 pages)
Document Number: GTC626_PRPS1_SA

5.1.1 Our Process Control System for your I&C Requirements

Our Process Control System Simatic PCS7 is designed to cover the various functions required for Automation, Operation and Management of various types of Process Plants and Utilities. The structure of our Process Control System is oriented towards the process requirements of modern plants. Inherent design features include:

- A plant oriented and easy to understand Process Control Structure that creates the basis for operating convenience combined with effective monitoring and diagnostic methods. It also provides the basis for a clearly structured engineering process.
- International Standards such as IEC, Windows, ETHERNET, Profibus, standard PC's or workstations etc. in order to provide a basis for safe, long-term investments together with secure flexibility for future developments.
- a modular and scaleable structure for system components and the possibility of major extensions at any time by simply adding the required equipment
- An open local area network structure for the interfacing to other Automation Systems and external PC Networks.
- Flexible start-up of the plant processes will be achieved by utilizing the features of the engineering system. Implementation of these processes will be achieved by simulating changes and by downloading these new logic functions to the Automation Processors.

5.1.2 Acquisition of Field Data and Processing of Signals, Open- and Closed Loop Control

The PCS 7 System consists of hardware modules and software function blocks for the acquisition and processing of field data, for the open and closed loop control (from basic control of individual drives through to complex Unit Control) and for the execution of commands to the process.

Signals from analog and binary transducers are received by signal conditioning modules. These modules are located in the I/O racks.

Basic logic and calculation functions together with function blocks for motors, actuators, etc. or higher level control functions (Group Control, Sub-Group Control etc.) are available as a standard feature of our system.

In addition clearly structured and pre-tested I&C concepts are available for various configurations of Open and Closed Loop Control tasks. These I&C concepts present our experience gained over many years of Automation.

5.1.3 Process Operation and Management

As "a window to the process" the man-machine interface, the PCS 7 Operator Workstation, provides the basis for operator control through consistent compression of information. Relevant information of the entire plant is presented to the control room personnel in an easily understandable format on monitors which replace conventional Control Panels. An "intuitive" operator control concept based on multi-screening and the use of "point and click" functions with mouse and windows provides for the operation features.

5.1.4 Alarm Signalling and Fault Finding

The Simatic PCS7 has an inherent alarm concept that guides the operator in a quick and intuitive way to the problem area while staying fully informed on the status of the process.

5.1.5 Automation (PLC) System

The PCS7 – Automation / PLC System covers all general automation functions, ranging from basic interlock functions for drives to Complex Closed Loop Control. It acquires measured values and status signals from the process, carries out Open- and Closed-Loop Control functions, transfers the resulting commands to the process and performs all the functions of the group and individual control levels. In addition the Automation System serves as a process interface for the other subsystems of the PCS7 family, namely the SCADA Servers, OWS and Engineering Station ES.

The PCS7 Automation controller (PLC) is available in several versions. Both single and Redundant controller options are available. For this project, we based our offer on the latest redundant S7400 platform.

Automation System Structure

For your requirements the Automation System SIMATIC S7 400 / 300 has been selected. Its functionality is distributed among:

- Master PLC for higher-level automation tasks such as Group or Sub-group Control, Closed Loop Controls, etc.
- Communication Processors (CP) for the connection to the plant bus
- Local PLC for Pipework with Touch Screen Operator Panels (OP). The OPs shall enable operators to monitor/control the process locally.

The System offered provides for:

- Redundant Hot-standby Master PLC and redundant communication processor for network connections.
- Single Local PLC (refer to Control System Configuration), redundant Communication Processor CP, redundant Internal Bus Structure for connection to Master PLC and single IO modules for field connections.
- Single local operator panel (refer to Control System Configuration) for pipework PLCs.

  Further detailed Information is presented in the attached Control System Configuration.

5.1.6 PCS 7 Server

The functionality of the PCS 7 System is distributed among the SCADA Servers and Operating Workstations, which are all realized with a uniform equipment technology based on industrial standard PC technique. This system structure provides the basis for modular extensions if performance, quantity of signals or number of operator stations required should change at a later stage.

The SCADA Server's task includes:

- Keeping an image of the current values or statuses of the allocated plant areas
- Storing data changes of the allocated plant areas in an archive
- Executing calculations
- Providing the dynamic information for the Operating Workstations and updating of the dynamic display information
- Logging functions

5.1.7 Operator Workstations PCS7-OWS

The Simatic PCS7 Operator Workstations, provide the operators with a homogeneous and ergonomically designed user interface for all process operating, process information and process management tasks.

The entire process or parts thereof are represented on plant displays structured on the basis of Piping and Instrumentation Schemes (PID's). Standard operation tiles within the plant display provide the structure for a secure and effective mouse "point and click" operation. For the evaluation of the process, various displays such as curves/trends, bars, working points in characteristic curve fields are available.

In addition, process values can be provided on print-outs. For evaluation at a later stage, the archived data are stored within the system inherent data storage and finally on MOD or equivalent (DVD/External Hard-drive etc).

The Operating Workstations (OWS) provide the complete Man-Machine Interface (MMI) to operators and supervisors. All displays of the plant are available on each OWS.

The operation and management of the complete plant can be performed from any Operating Workstation and the corresponding access rights are protected with password coding.

Further detailed Information is presented in the attached Control System Configuration.

5.1.8 Engineering Station

The ES Engineering Station is an integral part of the PCS 7 system. It is used through all stages of the project from clarification to detailed engineering to commissioning of the plant. Modifications and updates during the lifetime of the plant are generally carried out by the engineering station.

The ES provides the tool necessary to configure the entire process control system, hardware and software. The application software is designed by use of Continuous Function Charts (CFCs) function diagrams, which are converted into machine code by a code generator and then "downloaded" to the target systems PLCs and Servers/OWS via the bus system in a quick and safe manner.

The Simatic PCS 7- Engineering Station allows the system configuration in graphic form on the basis of standard process engineering practice without the need for programming knowledge. Automatic documentation guarantees that the current plant status is recorded in the system after each configuration modification.

5.2 LAN / Bus System

The use of international standards and specifications ensures open communication throughout the system.

The Plant level LAN structure at PRPS1 is split into four rings,

- Ring 1 Main Pump House
- Ring 2 South of the main pump house
- Ring 3 North of main pump house
- Ring 4 West of the main pump house

5.3 Time Synchronization

The presence of an exact real time signal for the SCADA system is essential, since all the pipework and Electrical as well as the OS Servers and Runtime Clients need a consistent common timestamp and alarm tracking.

A GPS based Time master reference clocks shall be used for time synchronization.

5.4 Final Documentation

All documentation is presented in the English Language.

At the time of system take over the actual state is saved on Data Carriers. It consists of:

	Final documentation presented on
Function Related Documentation	
• Logic Charts	Paper
• System Architecture Control & SCADA.	Paper
Hardware Related Documentation	
• Arrangement Drawing – Module Frames	Paper
• Internal Panel Wiring	Paper
• Field signal List / IO List	Paper
Product Related Documentation	
• System- / Equipment Manuals	Data carrier / CD
• Test Certificates Documentation	Paper

Chapter 3

Technical Literature

Chapter 3.1

Technical Literature -

PCS-7 Process Control System

© Siemens AG 2013

SIEMENS

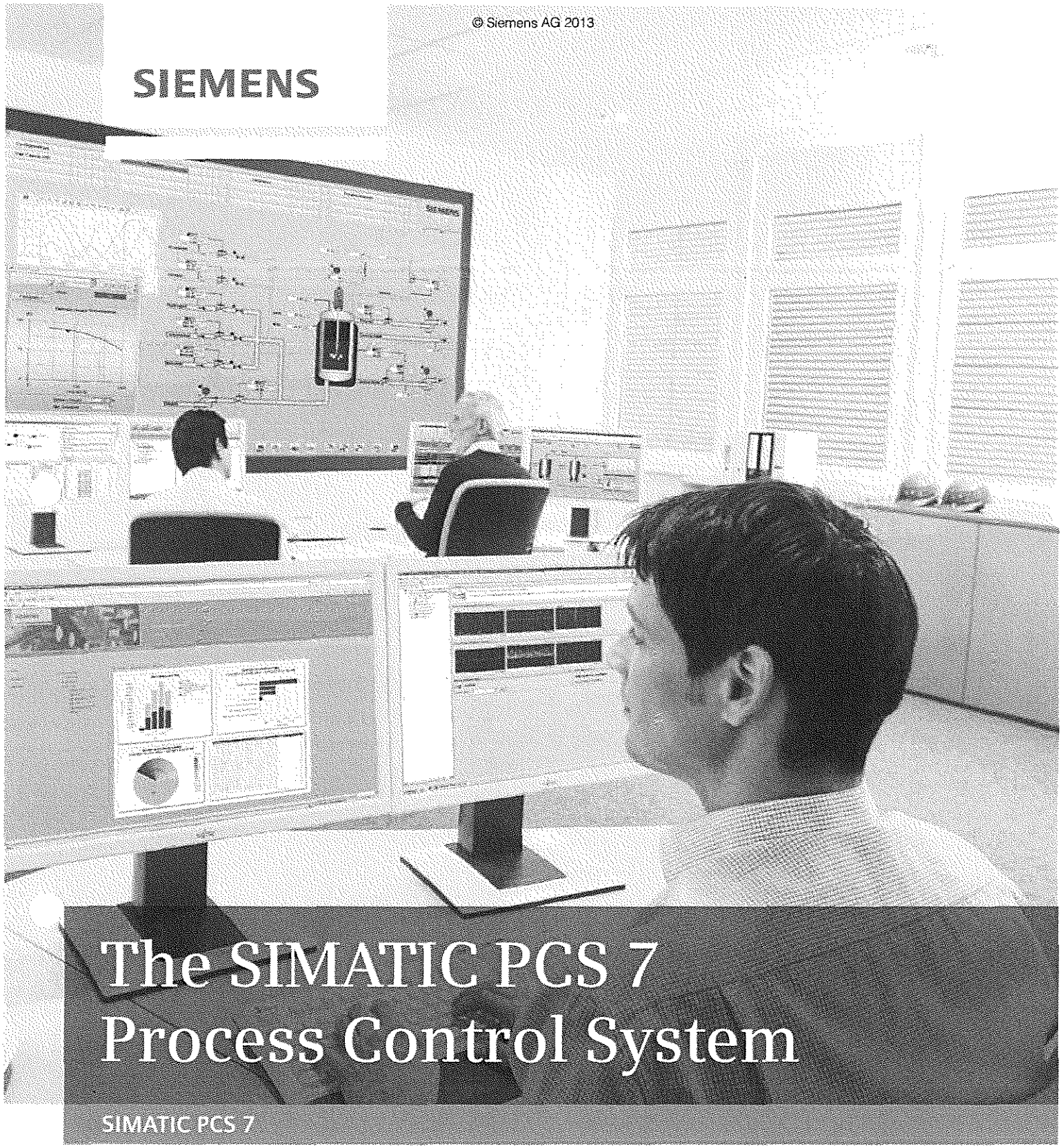

The SIMATIC PCS 7 Process Control System

SIMATIC PCS 7

Brochure

April 2013

Answers for industry.

© Siemens AG 2013

Totally Integrated Automation

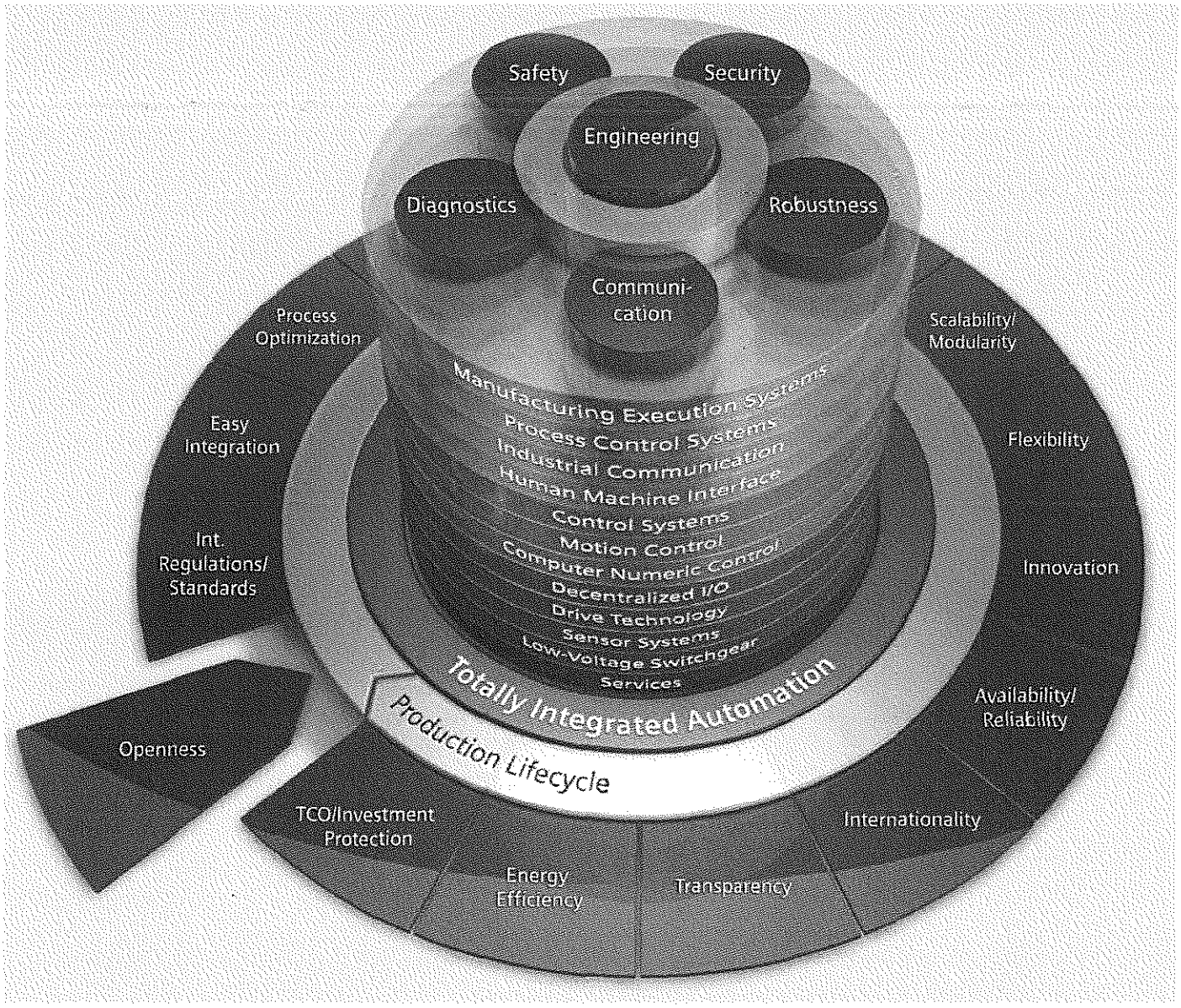

As one of the leading international process control systems, SIMATIC PCS 7 with the functional variety, flexibility, and performance of the current version 8.0, has the potential for implementing innovative solutions that meet the special challenges of the process industry. Since function spectrum and application area extend far beyond the limits of a typical process control system, SIMATIC PCS 7 opens undreamed of possibilities and many new perspectives.

SIMATIC PCS 7 benefits from its seamless integration in Siemens Totally Integrated Automation (TIA), a complete range of matched products, systems, and solutions for all hierarchy levels of industrial automation - from the enterprise management level, to the control level, all the way down to the field level. This enables uniform, customer-specific automation in all sectors of manufacturing, process, and hybrid industry.

© Siemens AG 2013

Contents

An essential advantage of the consistency of the product and system spectrum and the solutions based upon this spectrum is that faster and more precise control sequences, as well as integrated security functions of shared hardware, engineering, and engineering tools can be used for automation of continuous and discontinuous processes. Perfect interplay of all components makes it possible for you to sustainably produce in higher quality and to establish new products significantly faster on the market.

Progress you trust

Performance you trust 5
Customized performance 7
Performance in engineering 7
Performance in operation 8
Process automation with Siemens 12

System components

System administration with the Management Console 13
Engineering System 14
Process Device Manager 24
Operator System 26
Process data archiving and reporting 34
Diagnostics and maintenance 36
Automation systems 40
Compact systems 45
Communication 47
Process I/O 54
Batch automation with SIMATIC BATCH 58
Route control with SIMATIC Route Control 64
Safety Integrated for Process Automation 68
Industrial Security 75

Technology components

Package units and panel integration 77
Telecontrol 78
Switchgear/controlgear automation 80
Energy management with SIMATIC PCS 7 82
Optimization with Advanced Process Control 84
Simulation and training systems 86
Interfacing to IT systems 88
Controller integration with PCS 7/OPEN OS 90
Migration of own and third-party systems 91

Customer support

Services 93

© Siemens AG 2013

Progress you trust

We at Siemens are oriented according to the requirements of our customers and their markets. We continuously optimize our products and services to secure the competitive edge of customers through systematic further development.

In doing so, we always keep our attention on the requirements and trends in process automation: Our products, systems and solutions ensure more sustainability, and help to save time and costs, and our control system know-how makes a crucial contribution to boosting plant performance.

We have years of experience in all process industries. Our experts know the processes and support you with their knowledge on a daily basis when optimizing your plants. Intelligent automation and service concepts contribute decisively to the value added. They increase plant availability, profitability, and process and plant safety, and they are designed to protect investments and sharpen your competitive edge.

We place high demands on process management and implementation. As a partner in plant projects of all kinds and sizes, we are at your side with our specialist knowledge – based on globally standardized quality, and with the help of specially trained experts for fast and efficient implementation.

Thanks to extensive research and development work, an innovative corporate culture, our understanding as a trendsetter in automation, and representation on international committees, we want to do justice to our role as a motor of innovation, and we consider ourselves capable, together with customers and partners, of leading the way with further developments in the process industry.

With consistent customer orientation, years of experience, high innovation, and a comprehensive product and service portfolio, we create a foundation for trustworthy business relationships and satisfied customers.

SIMATIC PCS 7 is one of the world's leading process control systems. An essential requirement for this leading position is the success of our customers who achieve maximum performance levels in their day-to-day work using ideas, products and solutions from Siemens. See for yourself:

Put your trust in performance – back SIMATIC PCS 7.

© Siemens AG 2013

Performance you trust

In process plants, the process control system is the starting point for optimal value added: All procedures and processes can be operated, monitored and influenced with the process control system.

The process control system is the interface to the process, and it enables safe process and plant control and at the same time serves as the central database from which further optimization potential can be tapped into. The more powerful the process control system, the more effectively this potential can be used. For this reason, performance is in the foreground with SIMATIC PCS 7, alongside scalability, flexibility, and integration. Starting with planning and engineering, the process control system offers powerful tools, functions and features for cost-effective and efficient plant operation through all phases of the plant life cycle.

Performance through integration

Integration is one of the special strengths of SIMATIC PCS 7 and is evident in many aspects:

- Horizontal integration into TIA
- Vertical integration into hierarchical communication
- System-integrated tools for engineering tasks
- Integrated functions, e.g. for batch process automation, process safety, energy management, telecontrol tasks, etc.
- Integration of the fieldbus level including drives, switchgear, etc.

Horizontal integration
A system for integrated automation of the entire process chain, from incoming raw materials to outgoing goods – this is one of the decisive advantages resulting from the seamless integration of SIMATIC PCS 7 into Totally Integrated Automation.

The process control system is mainly responsible for automating the primary processes here, but it can do very much more: All ancillary facilities such as the electrical infrastructure in the form of low-voltage or medium-voltage switchgear, or the building management system, can also be integrated into the system.

Integration of selected SIMATIC standard components – automation systems, industrial PCs, network components, or distributed I/O units – into the process control system guarantees optimal interaction of individual components, and secures economic benefits such as simple selection, reduced stock keeping, or global support.

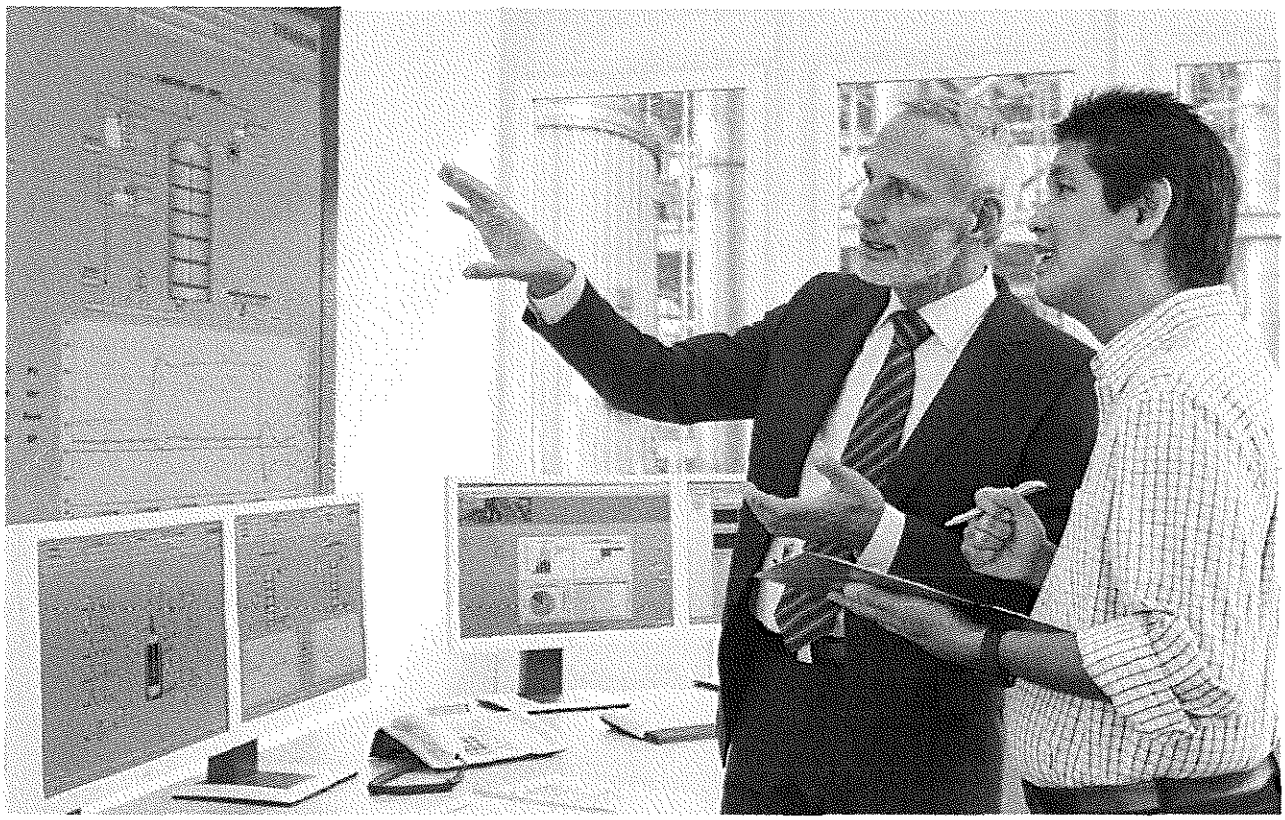

© Siemens AG 2013

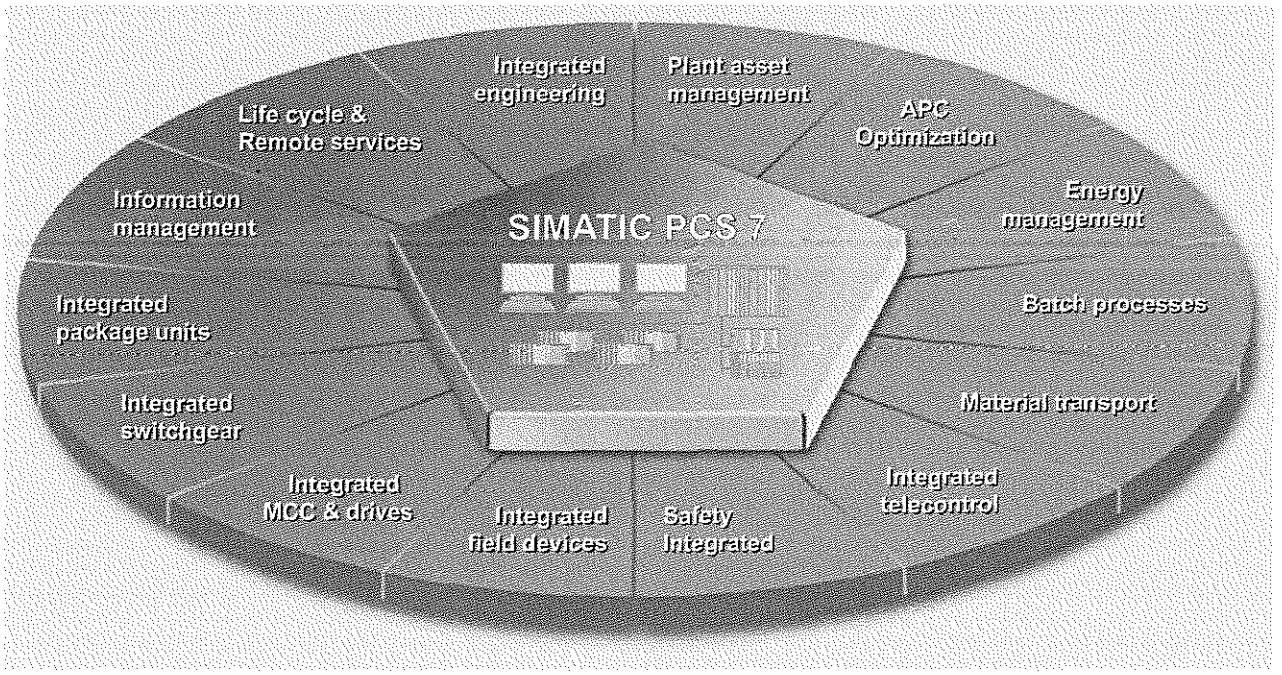

Vertical integration
The hierarchal communication of a company encompasses the field level, the control level, and the process level, up to management and enterprise resource planning (ERP). Thanks to standardized interfaces, based on international industry standards as well as internal interfaces, SIMATIC PCS 7 is able to provide process data for analysis, planning, coordination, and optimization of plant sequences or production and business processes – in real time, and at any location in the company!

Central engineering
SIMATIC PCS 7 convinces with graded functional diversity, consistent operator control philosophy, and uniformly structured engineering and management tools. A central engineering system with a coordinated range of tools for integrated system engineering and configuring of batch automation, safety functions, material transport or telecontrol systems creates value added over the entire life cycle. Reductions in configuring and training costs result in minimization of total cost of ownership (TCO).

Functional diversity
Depending on the typical process automation or customized requirements, SIMATIC PCS 7 can be functionally expanded for the following, for example:

- Batch process automation (SIMATIC BATCH)
- Functional safety and protection functions (Safety Integrated for Process Automation)
- Route control for material transport (SIMATIC Route Control)
- Telecontrol of remote units (SIMATIC PCS 7 TeleControl)
- Automation of electrical switchgears (SIMATIC PCS 7 PowerControl)

Further additional functions that are also integrated, or can be integrated, seamlessly into the control system make optimization of processes and reductions in operating costs possible. SIMATIC PCS 7 has, for example, tools for energy and asset management, and it offers higher quality closed-loop control functions, as well as industry-specific automation solutions and libraries.

© Siemens AG 2013

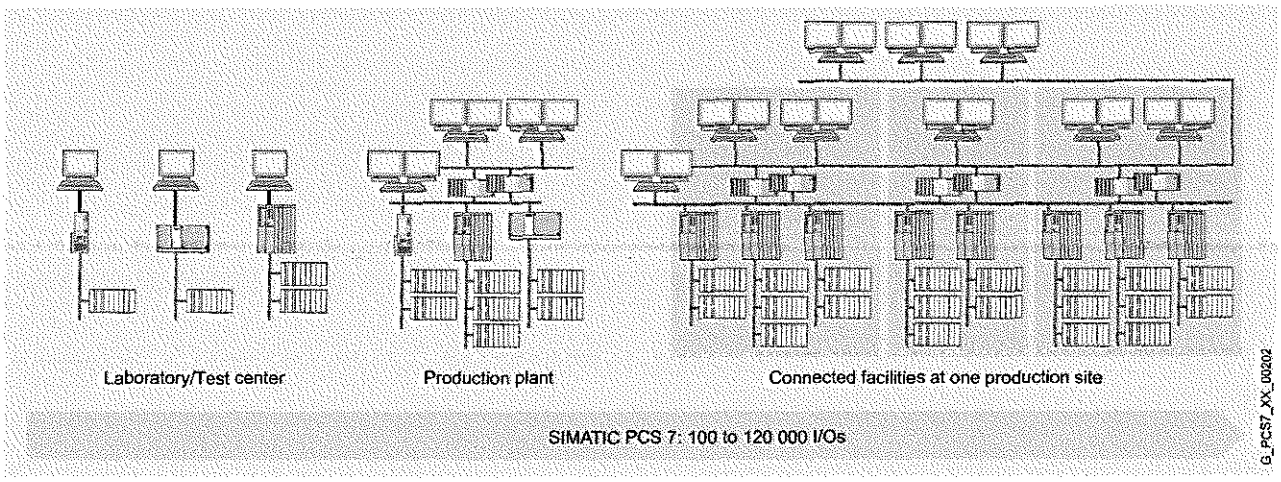

Scalability of the SIMATIC PCS 7 process control system

Customized performance

Thanks to a unique scalable system architecture, SIMATIC PCS 7 creates the ideal basis for cost-effective implementation of individual automation solutions, and economic operation of process plants.

SIMATIC PCS 7 users derive sustained profit from a modular system platform based on standard SIMATIC components. Its uniformity enables flexible scaling of hardware and software, as well as perfect interaction within the system – but also perfect interaction beyond system limits. The architecture of the SIMATIC PCS 7 process control system is designed in such a manner that instrumentation and control can be configured in accordance with customer requirements and optimally matched to the dimensions of the plant. The control system can be subsequently expanded or reconfigured at any time if there is an increase in capacity or a technological modification. When the plant grows, SIMATIC PCS 7 simply grows along with it – without the provision of expensive reserve capacities!

The scalability applies for all levels of the system. Just on the control level alone there are multiple function-compatible automation systems with graduated price/performance ratios that are available to the user:

- SIMATIC S7 AS mEC RTX modular embedded controller in S7-300 design with ready-to-use pre-installed Windows operating system as a low-cost automation system
- Compact SIMATIC PCS 7 AS RTX Microbox automation system
- Modular automation systems of the S7-400 range as standard, fault-tolerant and safety-related systems

The automation performance can be optimally matched to the requirements of the plant/unit. Expensive excess capacity can thus be avoided.

Performance in engineering

With regard to planning and engineering, performance can be equated with minimizing time and costs. SIMATIC PCS 7 offers a unique approach here in conjunction with COMOS: Integrated planning workflow from the description of the process to the automation program.

A standardized system interface, strictly object-oriented working, and centralized data management mean data consistency across all planning steps including automatically updated system documentation.

With the Advanced Engineering (AdvES) option package, SIMATIC PCS 7 also handles engineering with other planning tools with maximum efficiency since plant data can be imported without problems from CAD/CAE tools.

In addition, it also allows automatic generation of the AS configuration thanks to simple multiplication of process tag types and model solutions, as well as parameter processing.

© Siemens AG 2013

Performance in operation

Process control also becomes more complex as the multi-layer nature of automation engineering increases and it merges more and more with information technology. At the same time, rising pressure of costs makes intuitive and error-free operator input increasingly important to enable efficiency in operating personnel and to minimize downtimes and service work. SIMATIC PCS 7 supports operators optimally in their tasks and enables safe and user-friendly process control. Versatile tools are available here for reliable process optimization.

Process control and maintenance

As well as transparent process control, SIMATIC PCS 7 also offers monitoring of product quality and key performance figures for the efficient operation of your process plants, and it ensures more flexible processes, higher plant availability, and investment security.

The operator system of SIMATIC PCS 7 is the window to the process and the basis for safe and intuitive control of plants: Its architecture is flexibly scalable – from single user systems to multi-user systems with redundant client-server architecture. The operator interface takes account of the current specifications of NAMUR (user association of automation technology in the process industries) and PI (Profibus International) and offers a high level of user-friendliness and simple, intuitive interaction with the plant. Ergonomic symbols, task-oriented faceplates, uniform representation of status information, and optimized alarm functions allow safe process control.

The integrated alarm management system of SIMATIC PCS 7 is a further performance feature for guaranteeing safe and cost-effective plant operation. It focuses on essentials alarms, allows selective operator prompting in exceptional situations, and consistently contributes towards reducing the work load of plant personnel.

Preventive and predictive maintenance strategies reduce total cost of ownership. With the plant asset management system of SIMATIC PCS 7, you always have a watchful eye on critical production equipment such as pumps, valves, distillation columns or motors, and you can carry out the relevant maintenance measures in good time before service is required – without an established maintenance plan and without the risk of an unplanned plant standstill.

© Siemens AG 2013

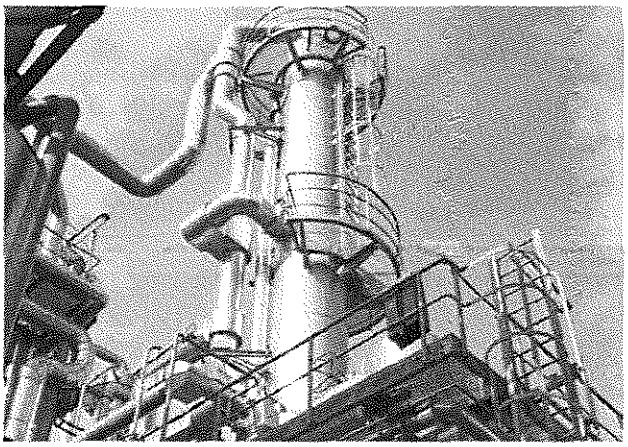

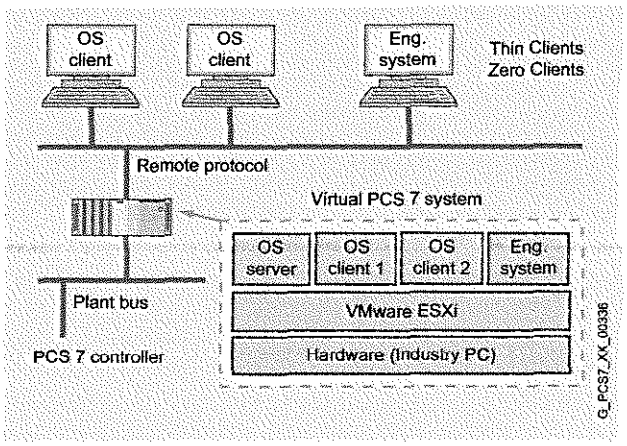

Process optimization

As well as these functions for improving plant and process control, SIMATIC PCS 7 offers a wealth of tools and features that support optimization of the processes. These include

- Control Performance Monitoring
- Advanced Process Control and
- Process Historian

Monitoring of the quality of control control loop ensures the maintenance of efficient plant operation. Control Performance Monitoring allows timely, and above all selective, maintenance or controller optimization when performance capability wanes.

With Advanced Process Control (APC), including multi-variable control, predictive control, or override controls, SIMATIC PCS 7 offers decisive levers for improving plant efficiency, cost effectiveness, product quality, safety, or environmental protection. These APC solutions are already stored in the standard block library, and can thus be implemented at very low cost.

Current and historic process data form the basis of all optimization. Secure and user-friendly real-time data storage and analysis is handled using Process Historian. The long-term archive for information such as process tags, process alarms, or batch data allows fast access to this historic plant data. The information server makes the information available to you again from the Process Historian – prepared in a clear and user-specific way with the standard reporting system of Microsoft Reporting Services.

Virtualization

Virtualization is an innovative software technology for emulation of hardware, operating system, data memory, and networks which is also increasingly finding its way into industrial automation. The initially higher investments for hardware, visualization software, service contracts, and infrastructure pay off as a result of long-term savings in operating costs in most cases during the plant's lifecycle. Important guarantees for the success of virtualization are capable IT departments with well-trained specialists as well as specific expertise in process automation.

Profitability essentially depends on the special project requirements which are characterized by aspects such as space requirements, remote access, energy saving, validation, plant layout, infrastructure or by virtual operation of other applications such as evaluation tools and information/reporting systems.

IT security is just as important in the virtual world as in the real environment. Therefore comparable security mechanisms and methods are applied, e.g. security patches, virus scanners, user management or access protection.

In the case of process automation with SIMATIC PCS 7, virtualization solutions have currently been approved for clients (OS, Batch, Route Control) and options such as SFC Visualization, OpenPCS 7/OS Client, PCS 7 Web Server or PCS 7 terminal server. Servers (OS, Batch, Route Control), engineering system or OS single station can also be operated in the virtual environment specific to the project.

Low-cost thin clients or zero clients serve as the hardware for the virtual clients and the optional virtual components. The operator stations configured in this manner are interfaced using remote protocols (VNC, VMware View). The operator control and monitoring functionalities known from the real plant are available to operators on these stations.

© Siemens AG 2013

SIMATIC PCS 7 performance you trust

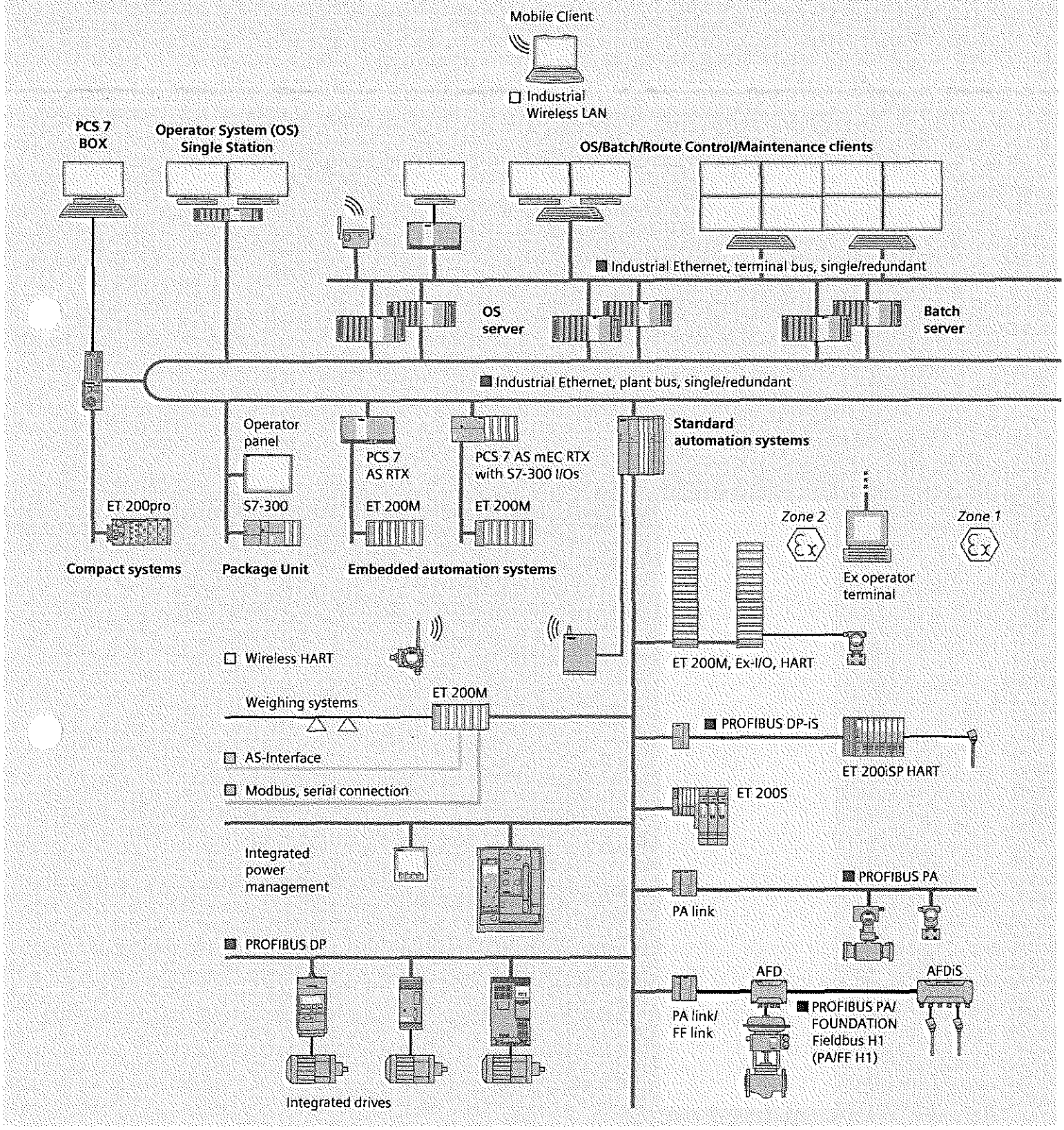

© Siemens AG 2013

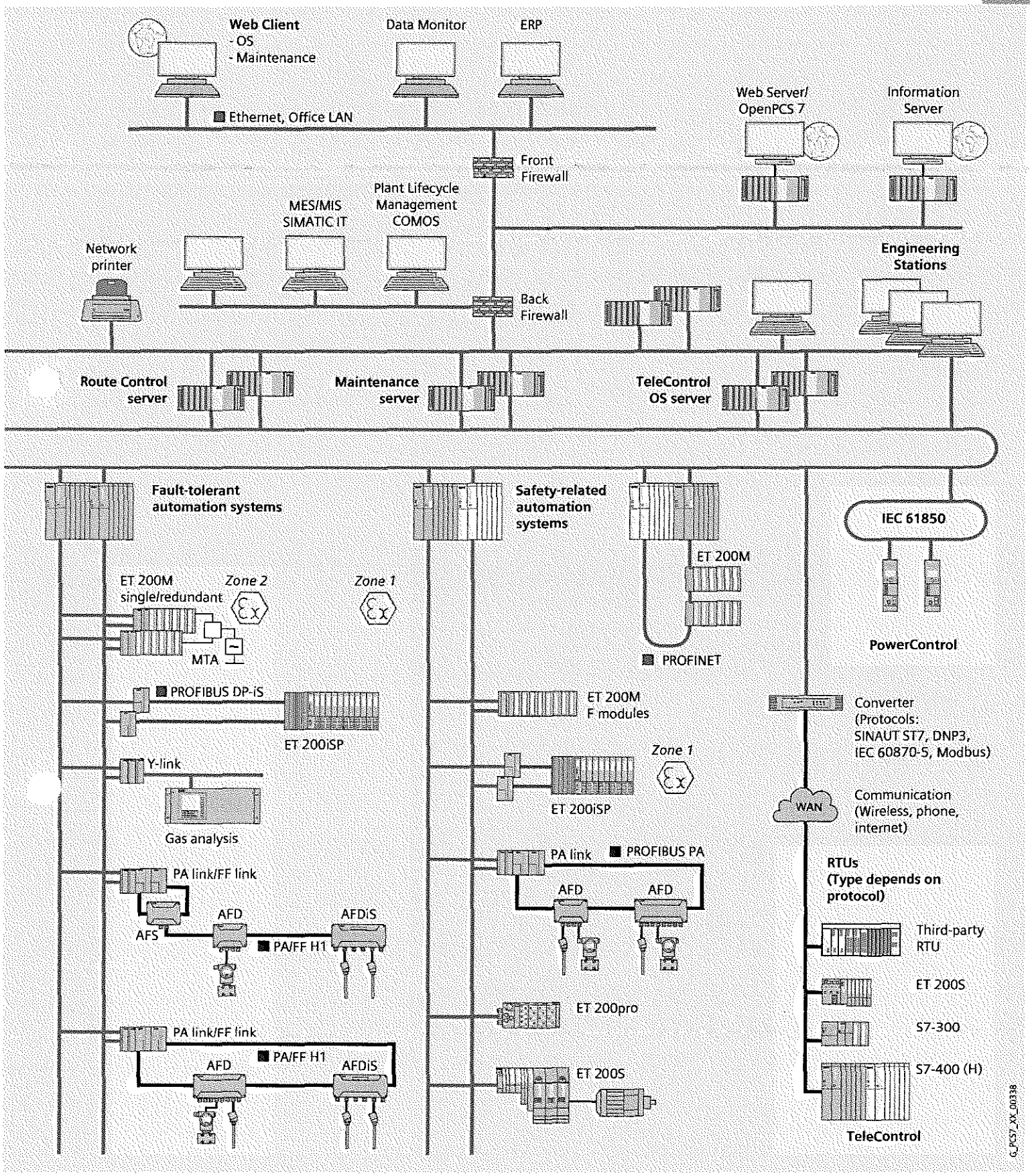

© Siemens AG 2013

Process automation with Siemens – more than just reliable technology

Mature technologies, powerful SIMATIC hardware and software, and industry-specific automation solutions create the optimal basis for your success. In addition, you will find Siemens to be a globally positioned vendor of automation technology - one you can trust.

▸ Innovation you trust

Siemens backs continuous technological innovation for your economic success today and in the future. Siemens is currently carrying out worldwide research with approximately 29 500 employees at 188 locations, and is cooperating with research institutions of leading universities. In the 2012 fiscal year, investments for research and development amounted to approximately 4.2 billion Euros. As a result, approximately 8 900 inventions were registered – 41 per working day. This high innovative strength is channeled into the products and thus has a positive effect on your results. As a trendsetter, Siemens builds on sustainable development strategies, increased application of renewable energy forms, efficient use of raw materials, and minimization of environmental pollution. Sales achieved with the environmental portfolio increased to more than 33 billion Euros in 2012 and resulted in CO_2 savings of 332 million tons.

▸ Expertise you trust

Each sector makes special demands on automation technology, follows individual trends, and must meet special challenges. Siemens recognized this years ago and responded with special sector orientation: Our experts concentrate on individual branches of industry. This guarantees that your contact person will be familiar with your processes and your markets. Profit from this experience and know-how in process control and optimization, especially for your sector! Our comprehensive, industry-specific range of engineering and consulting services covers the entire life cycle of your plant, from planning to modernization, and it accompanies you in each phase with optimizing service.

▸ Partner you trust

When you choose SIMATIC PCS 7 from Siemens, you have opted for a strong, experienced partner who is at your side with sound know-how in process automation and project management. For efficient and fast project execution, we have set up tried and tested guidelines and processes with which our teams worldwide ensure a uniformly high quality standard, regardless of the size of the plant or the scope of the project. We have established a tightly woven network of experts to support our process control system customers throughout the world. This includes Siemens system specialists as well as highly qualified and authorized external partners who provide first-class service and support in more than 190 countries of the world – from the initial consulting discussion, through the entire project execution, right up to support for individual products or comprehensive life cycle services.

We regard our close cooperation with partners and system integrators as a key to success in process automation. In order to expand and intensify this collaboration, we have created the Siemens Solution Partner program with a bandwidth that is currently unique on the market. It combines outstanding technology and application expertise with experience and comprehensive product and system know-how to form a tailor-made overall package for each individual plant project.

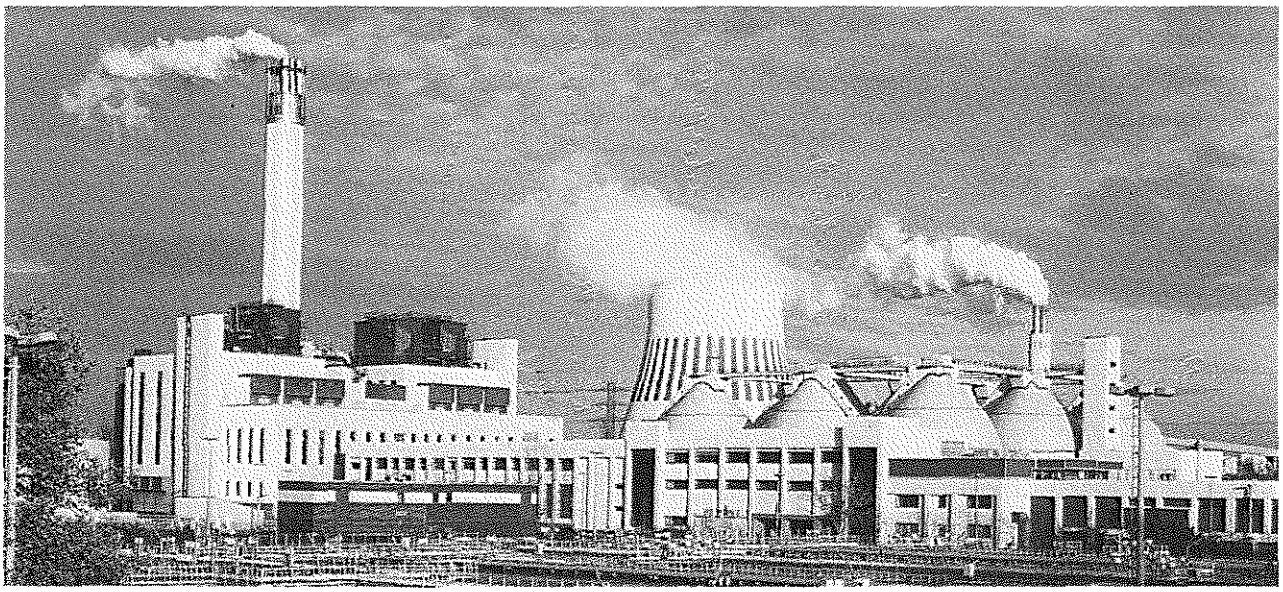

© Siemens AG 2013

System administration with the Management Console

An I&C plant comprises a large number of heterogeneous components with specific parameters and settings which are subject to a dynamic change process resulting from upgrades, modernization, and expansion. As the plant gets older, it becomes increasingly difficult to keep track of the current state of hardware and software. Without system support, achievement and retention of the required transparency is furthermore extremely complex.

The PCS 7 Management Console can be used to minimize the administrative requirements for a single SIMATIC PCS 7 plant or a plant network. The current status of the installed hardware and software components can be called at any time.

The PCS 7 Management Console permits:

- Central, standardized administration of SIMATIC PCS 7 software
- Creation of inventory for all installed hardware and software components of the SIMATIC PCS 7 system

With small plants, the PCS 7 Management Console can be installed and operated on the PCS 7 Engineering Station. However, a stand-alone PCS 7 Management Console on a PCS 7 Industrial Workstation of single station or server design is typical for medium-sized and large plants.

Each PCS 7 Industrial Workstation of the plant administered with the Management Console is licensed as a Management Console Agent.

Central software administration

New SIMATIC PCS 7 installations, upgrades, and service packs are administration components. The installation on the target station does not require active participation of the user. Security mechanisms prevent impairment of runtime operation.

- Provision of installation files on dedicated file server/PCS 7 Management Console
- Addition/removal of PCS 7 setups in the central setup management
- Creation of plant-specific or user-specific preconfigured setup packages

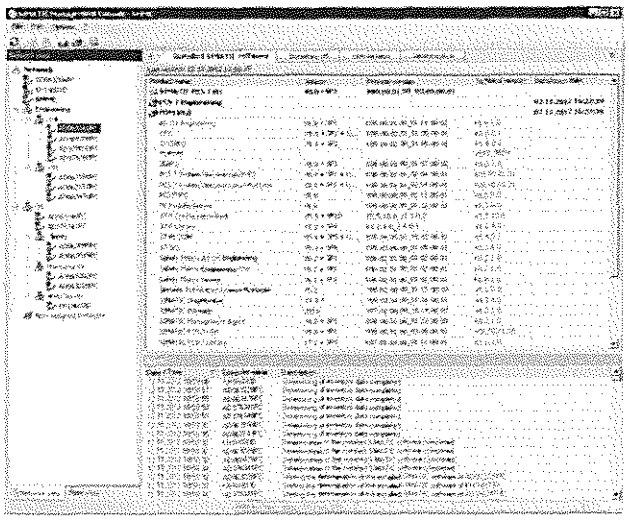

Overview of installed software status

- Rollout of pre-configured setup packages to target stations
- Checking of target stations for installation readiness
- Implicit, remote disabling of a station for starting an update installation
- Status monitoring of complete installation, and continuation following restart or network fault
- Implicit, remote enabling of a station after completion of an update installation

Creation of system inventory

The central creation of an inventory of installed hardware and software components simplifies the production of a detailed inventory report and permits rapid determination of candidates for updating/replacement:

- Central recording of inventory data by reading out of the engineering system or the component
- Inventory report in Microsoft Excel format
- Proof of license with installed and actually used components

For additional information, see:
www.siemens.com/simatic-pcs7/managementconsole

© Siemens AG 2013

Engineering System

System-wide engineering with the central engineering system

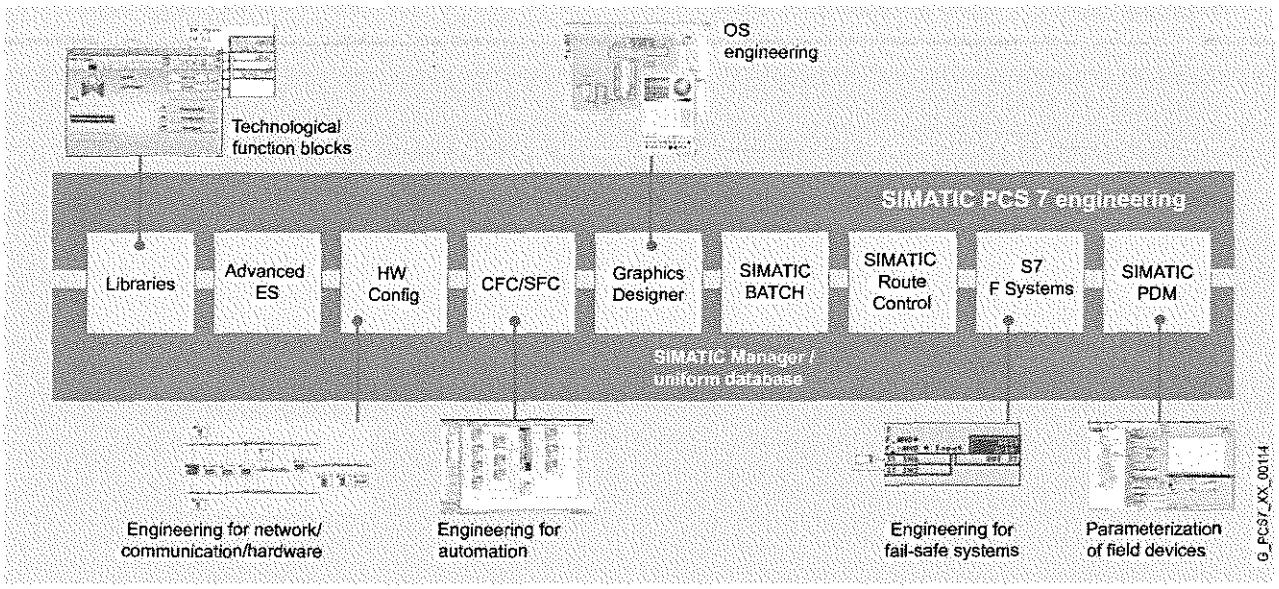

Engineering toolset of the engineering system

The use of a central engineering system with a uniform and matched range of tools minimizes the configuration overhead. The engineering tools for the application software, the hardware components and the communications functions are called from a central project manager (SIMATIC Manager). This is also the basic application for the creation, management, saving and documentation of a project.

The architecture of the Engineering System depends on how the SIMATIC PCS 7 project is processed:

- Locally, on a central engineering station
- In the engineering network (concurrent engineering, multiproject engineering)

The powerful SIMATIC PCS 7 Industrial Workstations with preinstalled Windows 7 operating system offer an optimum starting point for this. These can be used in the office sector as well as in industrial environments, and can control up to four process monitors via a multi-monitor graphics card.

Licensing of the standard engineering software depends on use of the engineering station as:

- Classical, exclusive engineering station (2-hour OS test mode, but no OS productive operation possible)
- Combined engineering/operator station for small applications

Engineering toolset

The complete functionality for the system-wide and project-oriented engineering – which is also the basis for asset management of the I&C equipment – is available to the planning engineer as an optimally coordinated engineering toolset.

This engineering toolset encompasses tools for effective engineering of the following components and functions:

- Mass data engineering and cooperation with CAD/CAE planning tools (Advanced Engineering System)
- Control system hardware including I/O and field devices
- Communication networks
- Automation functionality for continuous and batch processes (AS engineering)
- HMI functionality (OS engineering)
- Diagnostics and asset management functionality
- Batch processes, automated with SIMATIC BATCH
- Material transport, controlled by SIMATIC Route Control
- Safety applications (Safety Integrated for Process Automation)

© Siemens AG 2013

SIMATIC Manager

The SIMATIC Manager is the integration platform for the engineering toolset as well as the configuration basis for all engineering tasks of the SIMATIC PCS 7 process control system. All aspects of the SIMATIC PCS 7 project are managed, archived and documented here.

Technologists as well as process and production engineers can plan and configure in the environment they are familiar with by utilizing the engineering toolset designed for technological needs and the predefined blocks and charts. The uniform database of the engineering system guarantees that data which have been entered once are available system-wide.

Creating hierarchy folders implements a project structure, the technological hierarchy (TH). By storing CFC and SFC charts for automation systems, and pictures and reports for operator stations in a hierarchy folder along with additional documentation, the configuring engineer implicitly determines the hierarchical assignment.

The hardware required for use in a SIMATIC project – such as automation systems, communication components and process I/Os – is stored in an electronic catalog, and is configured and parameterized using the HW Config application.

Function blocks (FBs) and functions (FCs) can be encrypted and decrypted with the S7-Block Privacy application to protect know-how. Following encryption, the blocks and their attributes can no longer be modified. Only the interfaces of the blocks are then visible.

In order to implement the automation logic, predefined function blocks are linked to other blocks in the graphic configuration tool CFC. An SFC editor is available for graphical configuring and commissioning of sequential controls.

The project data for engineering of the operator systems is also organized with the SIMATIC Manager. All the data relevant to operation and monitoring of a process tag are generated automatically during definition of the automation function.

A powerful Graphics Designer supports generation of the process displays. The basis for generating process displays is provided by static symbols and dynamic block icons and faceplates that are managed in libraries and linked to the parameters of the function blocks.

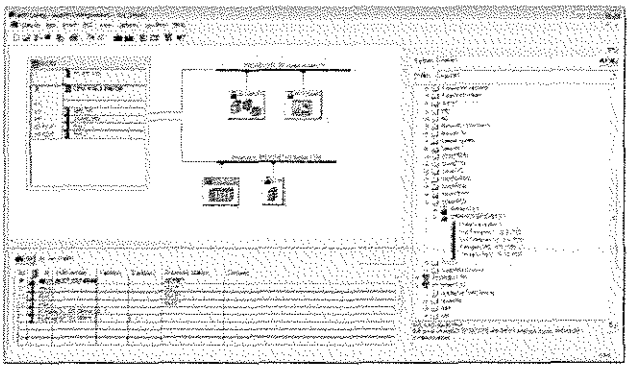

Component view: hardware configuration with HW-Config

With the optional Advanced Engineering System, configuring and commissioning can be effectively rationalized, e.g. by means of automatic generation of the hardware configuration or multiple use of standardized software modules. The Advanced Engineering System can also exchange data with higher-level planning systems for this purpose.

Complete SIMATIC PCS 7 projects or all applications of a project can be compiled and loaded into the target systems in one operation. The engineering system automatically ensures the correct sequence. A central dialog displays and controls the operation.

Selective changes to the configuration can be loaded online into the corresponding system components. Short turnaround times result in short waiting times for the commissioning engineer and have a positive impact on the commissioning costs.

The SIMATIC Manager supports the various tasks when creating a plant project by providing the following project views:

- **Component view (HW Config)**
  Configuration of hardware, such as automation systems, bus components, or process IO
- **Process object view**
  Central development environment for all aspects of process tags/process objects

© Siemens AG 2013

Engineering software

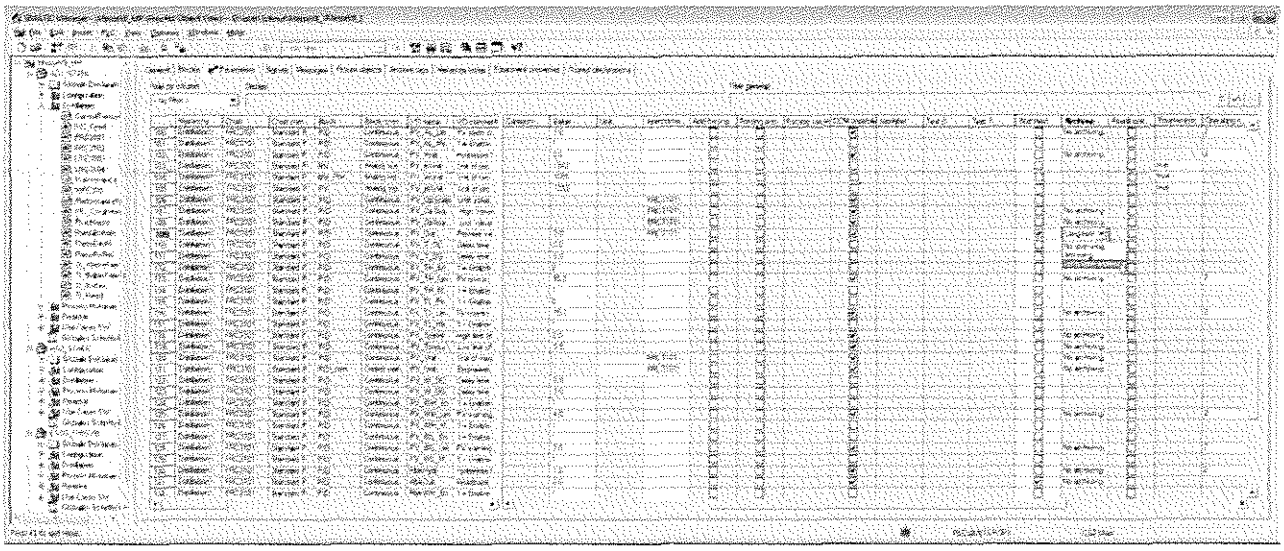

Process tags in the process object view

Process object view

The process object view of the SIMATIC Manager supports the work carried out by a process engineer by providing a universal view of the process tag. It shows the plant hierarchy of the plant (presented in tree form) in combination with a tabular view of all aspects of the process tag/object (general data, blocks, parameters, signals, messages, picture objects, archive tags, hierarchy folders, equipment properties and global declarations). This provides the technologist with fast orientation.

All objects in the marked branch of the hierarchy are displayed in the table so that they can be directly processed with user-friendly edit, filter, replace, import and export functions. A special test mode offers the facility for testing process tags and CFCs online and for starting them up.

The OS areas and the picture hierarchy for process control, as well as the SIMATIC PCS 7 asset management, can be derived from the plant hierarchy. This is also the basis for plant-oriented identification of process objects.

Group displays can be positioned in pictures by means of the picture hierarchy, and automatically linked to subordinate images. The configuration engineer only has to ensure the correct positioning. Since the number of group display fields and their semantics can be configured, it is also possible to implement customized alarm configurations.

I&C messages and process messages are already pre-configured in the function blocks, and operator input messages in the faceplates, and they are generated automatically when the trigger event occurs. If required, message texts can be modified or message priorities defined.

Using the process object view, "Smart Alarm Hiding" can also be configured. This refers to the dynamic hiding of alarms that, under certain plant conditions, are of less importance to the safe and interference-free operation of the plant. Depending on the operating status of a unit (startup, service, etc.), messages of the technological blocks grouped in this unit are shown or hidden according to the preceding configuration. By checking various option boxes in the alarm matrix of the process object view, you can define the show/hide status of the alarms individually for as many as 32 operating states. Although hidden alarms are not signaled visually and audibly, they are still logged and archived as before.

Continuous Function Chart (CFC)

The CFC editor is used for configuration of the continuous automation functions. In addition to convenient editing functions, its scope of functions also includes powerful test and commissioning functions as well as individually configurable documentation functions.

Instances of function block types can be positioned, assigned parameters, and interconnected on CFCs. Access privileges can already be assigned at the block level per block attribute, thus enabling finely graded privileges.

When creating a new CFC, a runtime group with the same name is created and automatically assigned to all blocks of this chart. Each block is therefore immediately assigned runtime properties which the configuration engineer can change or optimize using algorithms.

© Siemens AG 2013

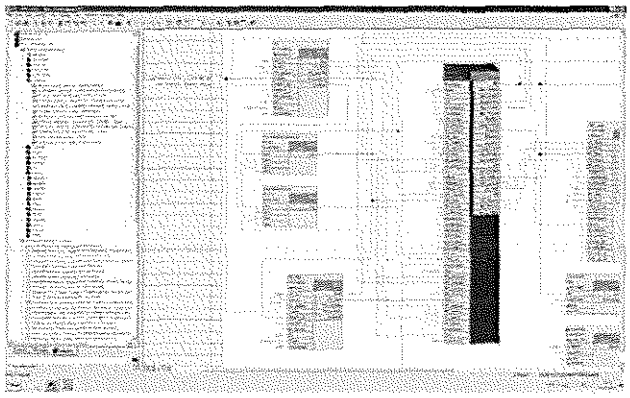

Continuous Function Chart

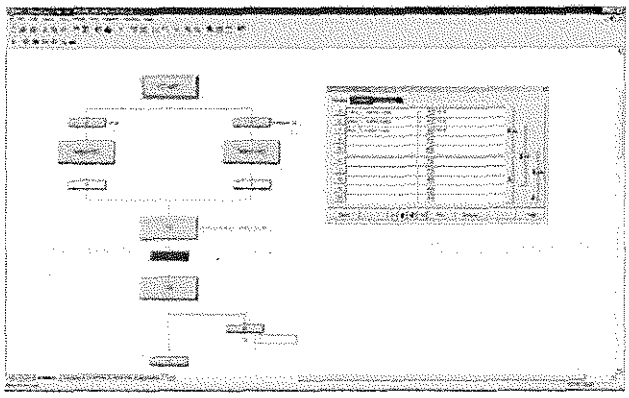

Sequential Function Chart

Special configuration techniques such as chart-in-chart for implementing hierarchical charts, or the multiple usage of chart block types (individual control units/process tag types) and SFC types (standardized sequential controls) in the form of instances, offer additional rationalization potential.

The CFC editor supports the following types of standardized software modules:

- **Function block type**
  Function block types supplied with I&C libraries are used for I&C modeling of engineering equipment such as valves or motors. The smallest standardized software modules for multiple usage have connections for actuating and control signals and for parameter assignment and monitoring functions. Some also contain interlocking functions for automatic transition to defined safety settings.
- **Process tag type**
  Process tag types implemented with function blocks each represent a standardized CFC for the basic automation of specific I&C functions, e.g. for a level controller. Their instances can be modified centrally by the type-instance concept, and also manually adapted and linked.
- **Individual control module type**
  The individual control module type (CMT) marks a new type of standardized software module. In conjunction with the Advanced Engineering System, this offers even more efficient engineering than classic process tag types. A CMT can contain blocks, charts, control variables (block I/Os such as signals and parameters) and messages.

Sequential Function Chart (SFC)

The SFC editor is used for the graphical configuration and commissioning of sequential controls for batch production operations. It possesses convenient editing functions as well as powerful test and commissioning functions. Using a sequential control, basic automation functions usually created using CFC are controlled and selectively processed by means of changes in operating mode and status. Depending on the subsequent use, the sequential controls can be created either as a SFC or SFC type.

SFC
The SFC is used to implement sequential controls which can be applied once and which access several partial areas of the production plant. Each SFC contains standardized inputs and outputs for status information and for control by the user program or the user. The SFC can be positioned and interconnected as a block in the CFC. The required CFC block I/Os are selected by simple operations and connected to the steps and transitions of the step sequences.

A status manager conforming to ISA-88 enables the configuration of up to 8 separate sequencers within a single SFC, e.g. for states such as RUNNING, HOLDING or ABORTING, or for different operating modes.

SFC type
SFC types are standardized sequential controls which can be applied repeatedly and which access one partial area of the production plant. They can be organized in libraries, and handled like normal function blocks, i.e. they can be selected from a catalog and positioned, interconnected and parameterized as an instance in a CFC chart. Changes to the original automatically result in corresponding changes in all instances. An SFC type may contain up to 32 sequences. Using the function "Create/update block icons", a block icon is automatically positioned and interconnected in the associated process display for all SFC instances with HMI features.

© Siemens AG 2013

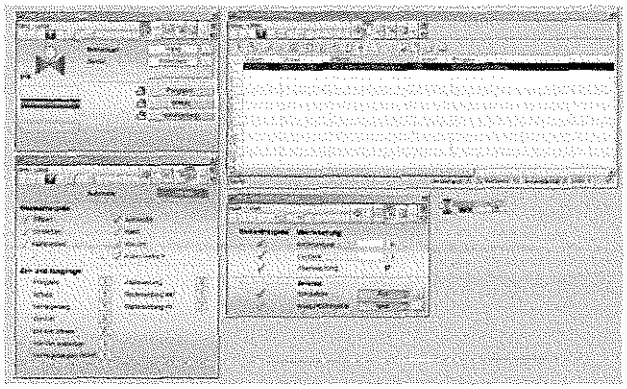

Examples of OS standard displays (faceplates)
from the SIMATIC PCS 7 Advanced Process Library, Valves

Process Control Libraries

The use of library elements plays a major role in minimizing the amount of engineering required and thus also the project costs. In the engineering standard software of SIMATIC PCS 7, two I&C libraries are integrated - the Advanced Process Library installed as standard, as well as the SIMATIC PCS 7 Standard Library installed as required.

Preconfigured and tested blocks, faceplates and symbols are organized in these libraries and form the basic elements for the graphic configuration of automation solutions. The comprehensive range of blocks can be categorized as follows:

- Blocks for mathematical operations, analog and digital logic
- Interlocking blocks
- Technological function blocks with integral display, operation and signaling functions, e.g.:
  - Standard control blocks
  - Advanced Process Control blocks
  - Motor and valve blocks
  - Counter blocks
  - Dosing blocks
- Blocks for integration of field devices
- Operator control and monitoring blocks
- Signaling and diagnostics blocks

Furthermore, preconfigured process tag types for process equipment such as pumps, valves, dosing units and controllers (cascade, spit-range) etc. extend the scope of library elements.

Advanced Process Library

The Advanced Process Library (APL) is the standard library for SIMATIC PCS 7. It is based on the extensive experience of project engineers and plant operators, taking into account current NAMUR recommendations and PI specifications.

Proven functions as well as visually attractive GUIs for a high level of operator convenience facilitate and also force interaction of operators with the plant. Alternative, small versions of function blocks reduced to core functions, whose block icons and faceplates take up less space in the process display, improve clarity in complex process displays. Other features worth mentioning are:

- Special operating modes
  - "Local" for integration of local control options
  - "Out of service" for deactivating a measuring point for maintenance
- Several faceplate views
  - "Preview" with status information on the I/O signals, automatic control and possible/permissible operator inputs as well as display of actual process values for simulation
  - "Memo view" for temporary information from operating personnel
- Convenient interlocking blocks with initial signal information, can be directly called from technological blocks
- Flexible scaling of functions in the library blocks
- Commissioning support through direct simulation on the operator station
- Protection against operator errors as the result of detailed grading of user privileges
- Explicit enabling/disabling of operations for a process tag for individual operator stations of the plant
- Integration of any compact drives and switch/starter objects via standard PROFIBUS profiles
- Coordination of multiple access operations, e.g. of SFC/SIMATIC BATCH, to the equipment such as valves, pumps etc.
- Tacking of operator input windows facilitates repeated, successive operations

Industry Library

The Industry Library expands the standard functionality of the APL with specific sector functionalities. This includes:

- Blocks for building automation (heating, air-conditioning, ventilation)
- Blocks for operating and monitoring using Touch Panels
- Blocks for integrating SIMATIC S7 package units (optimized for S7-300)
- Other technological blocks, e.g. for expanding measured value monitoring, or specifying a setpoint curve

All display icons, function blocks and faceplates of the Industry Library appear in the design of the APL style.

© Siemens AG 2013

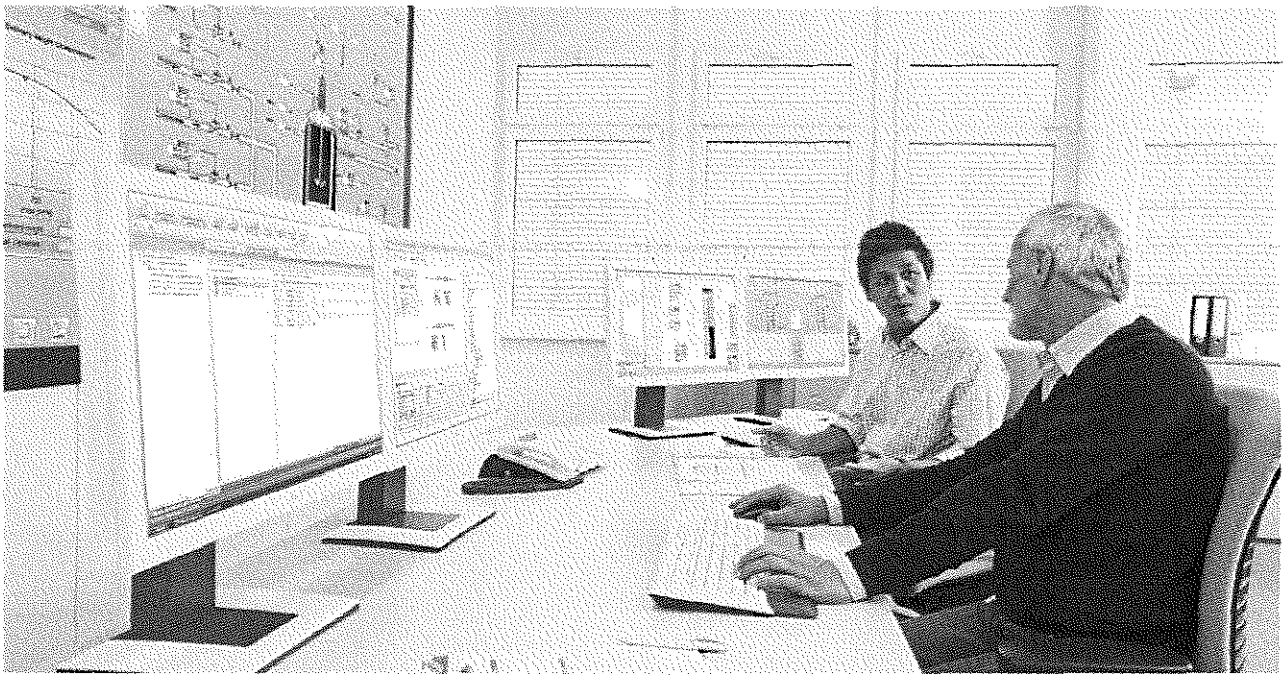

Shared configuration tasks

Concurrent engineering
With concurrent engineering, multiple project engineers can work concurrently on one project in CFC and SFC, without having to split the project up into sub-projects beforehand. During commissioning, for example, charts can be used in the online (debug) mode and at the same time changes can be made to the project.

The project is localized on one of the participating Engineering Stations, the project server. The Engineering Stations working as "Project Clients" can access the project data via LAN/WAN. CFC and SFC charts can be opened and viewed by multiple project engineers concurrently. However, the system rejects concurrent write accesses to the database.

Every Engineering Station in the network (project server/ client) is able to download configuration data to a SIMATIC PCS 7 subsystem provided it has the required communication connections.

Multiproject engineering
Multiproject engineering permits division of a complex project into several subprojects in accordance with technological criteria in order to allow several teams to work on the project in parallel. To achieve this, a host "Multiproject" is defined in the SIMATIC Manager. The individual projects can be added or removed from a multiproject at any time.

The technological division and combination of projects is supported by the Branch & Merge functions. For the charts or units copied into another project for editing, cross-project interconnections, typically e.g. for interlocks, become textual interconnections. When merging, textual interconnections can be closed at the press of a button. Charts with the same name in the original object are overwritten.

Central configuration functions for multiprojects help to reduce the configuration overhead. For example, a hierarchy folder can be created automatically in all projects. Then, although only the original can be modified in the original project, objects can be inserted in all folders. All block types used in a multiproject can be updated centrally.

The subprojects in a multiproject are stored on a central server and moved to the local engineering stations for editing. The engineering performance is thus unaffected by network access.

© Siemens AG 2013

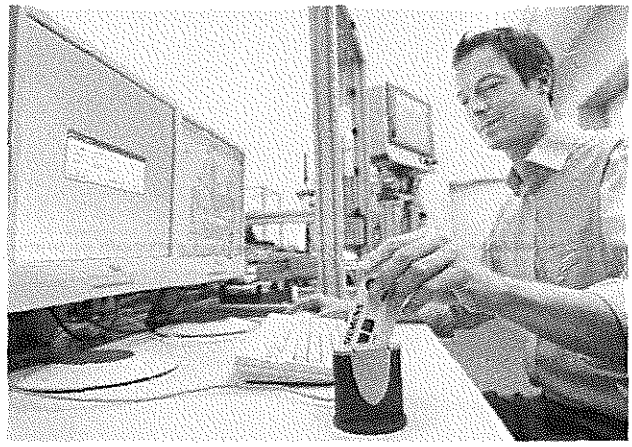

Access check and change verification

SIMATIC Logon, the user administration and access control function integrated into the engineering system, offers the plant operator excellent system support when verifying changes in combination with the detailed recordings in the change logbook.

With SIMATIC Logon, the administrator can divide users into groups with different access rights, thus controlling the access to data. Access rights for stations of the process control system and operator privileges for blocks can both be set up. Configurable modification protocols can record all access operations to the engineering system as well as all online changes concerning the automation systems, operator systems, SIMATIC BATCH or SIMATIC Route Control.

If you link the modification reports during the evaluation with the data of SIMATIC Logon, it is possible to verify clearly who has made a particular change, and when. Such verifications are often the object of special sector-specific requirements, formulated, for example, in FDA 21 CFR Part 11 or GAMP.

Version Cross Manager

The Version Cross Manager is a user-friendly tool for determining the differences between various versions of individual projects or multiprojects by:

- Tracing missing, additional or differing objects by comparing hardware configuration, communication, plant hierarchy, CFCs/SFCs, SFC details, block types, alarms, global variables, signals and run sequences
- Graphic display of comparison results in a combination of tree and tabular formats
- Clear hierarchical structuring according to the plant hierarchy of the plant
- Color-coded identification of the differences

Version Trail

When used together with SIMATIC Logon, SIMATIC Version Trail permits version-specific archiving of libraries, projects, and multiprojects. SIMATIC Version Trail tags the with a version ID when archiving, and enters the following information in the version history:

- Version
- Version name
- Date and time
- Users
- Comment

Individual versions can be retrieved from the archive, and used further. SIMATIC Logon organizes the access protection.

Archiving and retrieval procedures can be automated on a time-driven basis. Retrieval of block parameters from the automation system can be coupled with the archiving procedure, but can also be performed independent of this on a time-driven basis and with version assignment.

The version history managed by Version Trail can be displayed and printed. An already completed version cannot be modified at a later date. In conjunction with the Version Cross Manager, an archived version can be compared with an existing project or a second archived version.

Project documentation

The reporting system integrated into the engineering system can be used to document the engineering project in accordance with standards. The project report records:

- Mimic diagrams and picture objects with properties, events, actions, and direct links
- Variables, properties, and communication links
- Message classes, message blocks, and messages
- Archive tags, and configuration data for archives
- User groups and users
- Source text of actions/functions
- Texts of text library
- Basic Process Control configuration data

The project data can be freely-structured, edited in the form of standardized circuit manuals, and printed in a uniform layout. You can incorporate your own cover sheets, layouts, graphics, logos or title block data. A convenient output control function allows you to select a complete project or individual parts of a project for printing.

© Siemens AG 2013

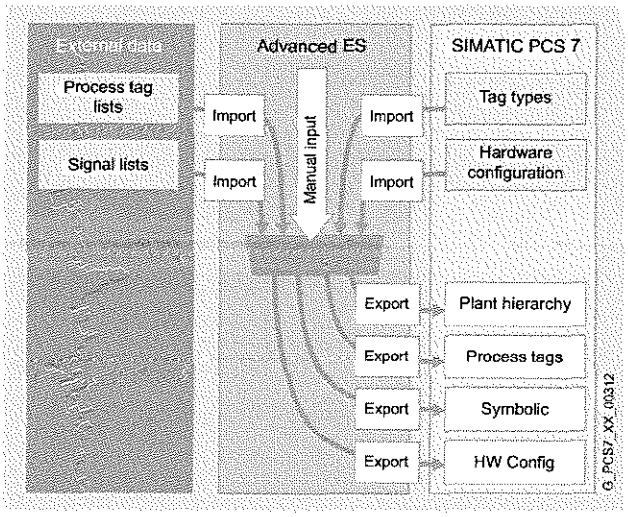

Data flow when using the Advanced Engineering System

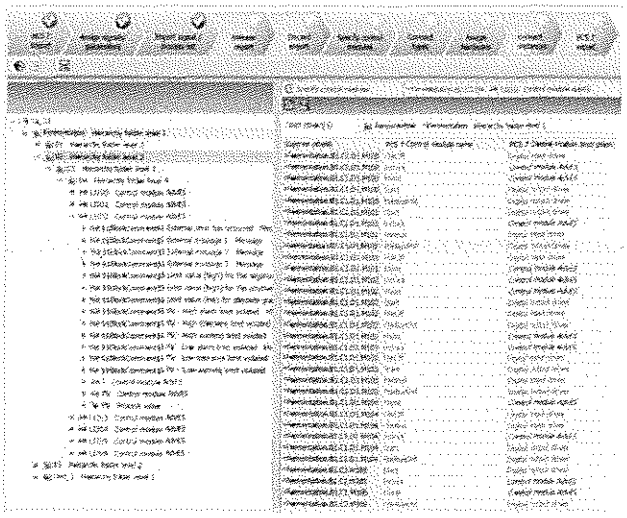

Integrated workflow management with progress indicator in the header bar

SIMATIC PCS 7 Advanced Engineering System (AdvES)

Using the AdvES, consulting engineers and planning offices as well as end customers can significantly reduce their configuration and commissioning costs while simultaneously improving the engineering quality.

The AdvES which can be called in the SIMATIC Manager from a SIMATIC PCS 7 project expands the functionality for plant configuration in cooperation with higher-level CAD/CAE planning tools. It acts as a link between standard engineering tools from the SIMATIC PCS 7 Engineering Toolset (CFC, HW Config, plant hierarchy) and tools for basic and detailed planning, e.g. EPlan, ELCAD or SmartPlant.

AdvES uses various data import options in order to collect existing engineering data from the SIMATIC PCS 7 process control system and from process tag and signal lists in Microsoft Excel format and to prepare these for utilization in the SIMATIC PCS 7 engineering system.

Data from process tag and signal lists can be automatically imported into AdvES. Integrated change management supports the repeated importing of modified data from Microsoft Excel.

AdvES recognizes process tags in Excel lists after the first assignment, automatically assigns them to process tag types of any PCS 7 project library, and then generates the following data:

- PCS 7 process tag instances with signal and parameter settings
- Plant hierarchy (PH)
- Hardware configuration

Inconsistencies can be detected quickly by means of plausibility and data consistency checks, displayed in a log, and then eliminated in a targeted manner.

Manual processing functions for editing plant hierarchies and process tags as well as for interconnection of signals between process tags allow completion of the imported data. Special editors for mass data processing offload the project engineer from time-consuming routine work.

With the support of integrated design templates, the different table views of the AdvES data can also be displayed as reports and printed.

The user is supported in carrying out tasks by integrated workflow management. The sequence and progress of execution are displayed in a header.

© Siemens AG 2013

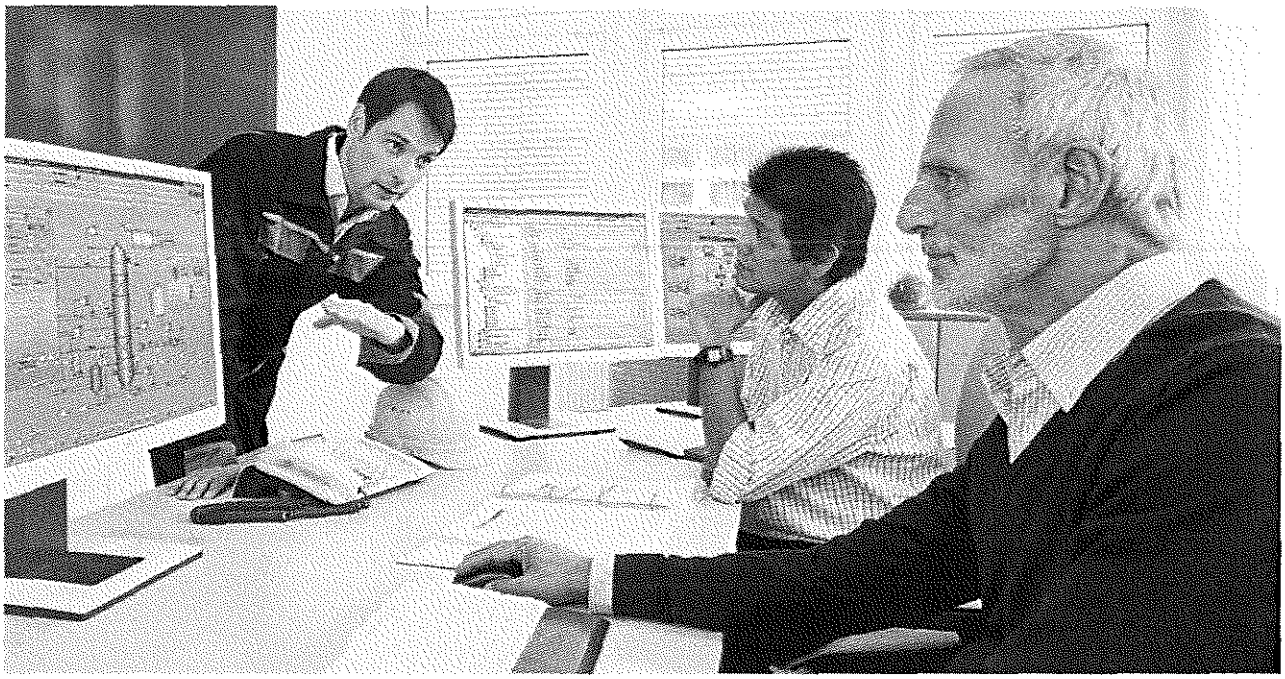

Mass data engineering
The AdvES rationalizes mass data engineering by means of multiplying standardized software modules. Both the individual control module types (CMTs) and the classic process tag types are supported. AdvES is optimized for working with the control module types.

A CMT library of the PCS 7 Basic Control Modules (BCMs) is integrated into AdvES. With system support, any user libraries with process tag types can be converted into control module types.

Blocks, links, connections or messages can be added later to a CMT or removed from it, even if instances (individual control modules (CMs)) already exist. In this way, versions of process tag types can be defined very easily for multiple use. The instances can be checked for deviations from CMT, and adapted if necessary.

Summary of basic AdvES functions
- Import of system planning data and SIMATIC PCS 7 engineering data
- Processing functions for the manual completion of imported data
- Simple interconnection of several process tags
- Generating of process tags from signal and process tag lists
- Generation of hardware configurations from signal lists
- Batch processing of process tags, signals, and parameters
- Automatic plausibility and consistency check
- Transfer of data into the SIMATIC PCS 7 Engineering System
- Reports for updates and tests

© Siemens AG 2013

Engineering System highlights

- Central hardware and software configuration which is uniform throughout the system through use of one engineering system
  - User-friendly GUI
  - Low-effort parameterization of communication
  - Same configuration for redundant plants
  - Integrated configuration for field devices and safety-related applications
- Technology-oriented configuration
  - Functional hierarchy organized according to plants, units, and technical equipment
  - Hardware-independent engineering: AS assignment and I/O modules can be subsequently selected
  - Expandable on industry-specific basis using standard data exchange interfaces
- Integral user administration with access control
- Central dialog for compilation and loading of AS, OS, and SIMATIC BATCH modifications
  - Optimization of sequence and control by dialog with sequence control
  - Compilation and loading in one operation: minimum turnaround times
  - Online loading of selective changes in configuration
- Process object view for display and processing of all aspects of process tags/objects
  - Convenient editing in tables
  - Process library with import/export functions
  - Online mode for testing and commissioning
- Shared configuration tasks: Concurrent Engineering or Multiproject Engineering with Branch & Merge
- Configuration-dependent hiding of alarms for specific operating states
- Special SFC functionalities:
  - SFC type: sequential control for multiple use, instances as block in the CFC
  - SFC: sequential control for single use, also with chart I/Os
  - Separate sequences for statuses such as HOLD, ABORT or SAFE STATE, conforming to ISA-88
- Lower engineering/validation overhead:
  - Advanced Process Library (function blocks, face-plates, icons, process tag types)
  - Type-instance concept with central modification option for all instances
  - Advanced Engineering System for bulk engineering and data exchange with planning tools
  - Central updating of all block types of a multiproject
  - Many automatic configuration steps (auto engineering)
  - Simple duplication of units by copying, renaming and compilation
- High-performance version management with version comparison and version history
- Automatic generation of diagnostics displays for the maintenance station on the basis of the project data
- Integrated engineering workflow with COMOS planning tools

© Siemens AG 2013

Process Device Manager

Engineering of intelligent field devices and field components using the SIMATIC PDM Process Device Manager

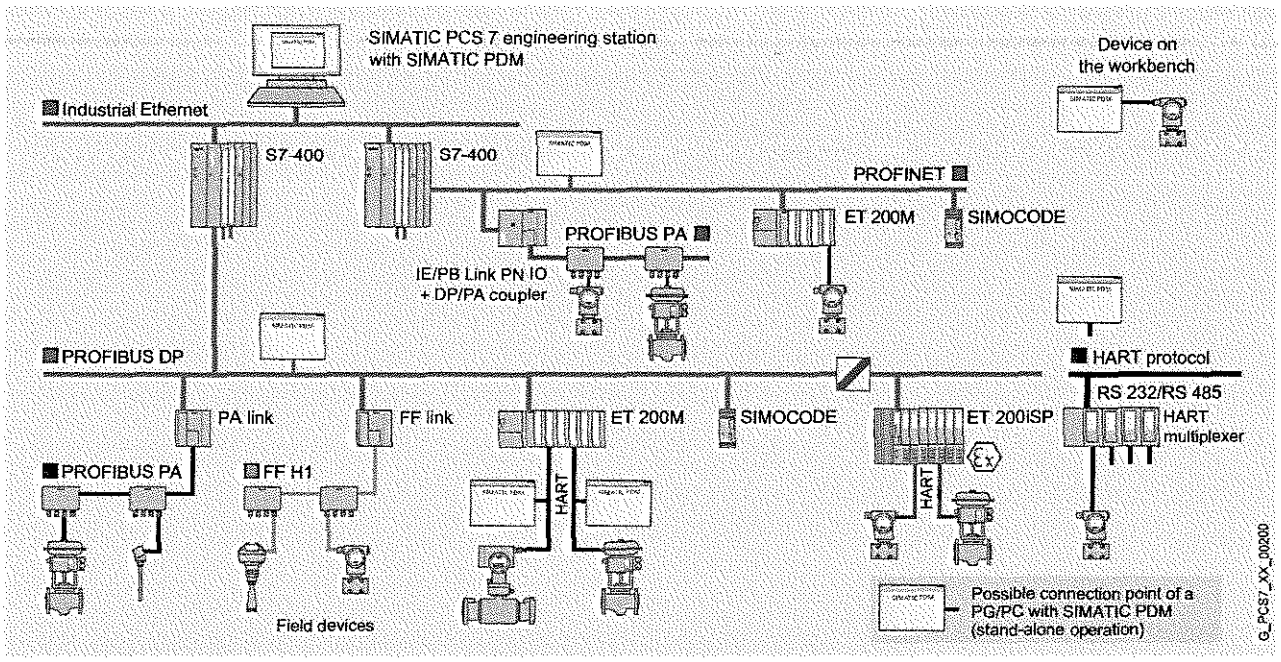

Possible connections of SIMATIC PDM

SIMATIC PDM (Process Device Manager) is a universal, vendor-independent tool for the configuration, parameterization, commissioning, diagnostics and servicing of intelligent field devices (sensors and actuators) and field components (remote I/Os, multiplexers, control room devices, compact controllers), which in the following sections will be referred to simply as devices. Using only one software, SIMATIC PDM enables the processing of more than 2 500 devices from Siemens and over 200 manufacturers worldwide with an homogeneous user interface. Parameters and functions for all supported devices are displayed in a consistent and uniform fashion independent of their communications interface. From the viewpoint of device integration, SIMATIC PDM is the most powerful open device manager available in the world. Devices which previously were not supported can be integrated in SIMATIC PDM at any time by simply importing their device descriptions (EDD). This provides security and saves investment, training and consequential costs.

Integrated into SIMATIC PCS 7 Asset Management, SIMATIC PDM provides more detailed information for all devices described by means of an Electronic Device Description (EDD), e.g.

- Detailed diagnostics information (manufacturer information, information on error diagnostics and troubleshooting, further documentation)
- Information on changes (audit trail report)
- Parameter information

Possible applications

- Integrated in the SIMATIC PCS 7 Engineering System
- Stand-alone as a service tool on a mobile computer on PROFIBUS, PROFINET, or with direct connection to the device

Core functions

- Adjustment and modification of device parameters
- Comparing (e.g. project and device data)
- Validation of data input
- Device identification and testing
- Device status indication (operating modes, alarms, states)
- Simulation
- Diagnostics (standard, detail)
- Management (e.g. networks and computers)
- Export/import (parameter data, logs, documents)
- Commissioning functions, e.g. measuring circuit tests of device data
- Device management (lifecycle management)
- Global and device-specific change log for user operations (audit trail)
- Device-specific calibration reports
- Graphic presentations of echo envelope trends, trend displays, valve diagnostics results etc.
- Display of incorporated manuals
- Document manager for integration of up to 10 multimedia files

© Siemens AG 2013

Support of system management

SIMATIC PDM supports the operative system management in particular through:

- Uniform presentation and operation of devices
- Uniform representation of diagnostic information
- Indicators for preventive maintenance and servicing
- Detection of changes in the project and device
- Increasing the operational reliability
- Reducing the investment, operating and maintenance costs
- Forwarding of device information to higher-level Maintenance Stations

Device Integration

SIMATIC PDM supports all devices described by EDD (Electronic Device Description). Based on EN 50391 and IEC 61804, EDD is the most widely used standardized technology for device integration. At the same time, it is the guideline of the established organizations for

- PROFIBUS and PROFINET (PI – PROFIBUS & PROFINET International)
- HART (HCF: HART Communication Foundation)
- FF (Fieldbus Foundation)

The devices are integrated directly in SIMATIC PDM through a company-specific EDD, or the current HCF or Fieldbus Foundation libraries. To achieve improved transparency, they can be managed in project-specific device libraries.

PROFIBUS devices are described in the EDD in terms of functionality and construction using the Electronic Device Description Language (EDDL). Using this description, SIMATIC PDM automatically creates its user interface with the specific device data. The range of devices can be updated and expanded by simply importing the manufacturer's device-specific EDD.

Fieldbus Foundation provides pre-defined device descriptions (standard DD) for the basic functions of specific field device types. The basic functions are implemented using various standard function and transmission blocks.

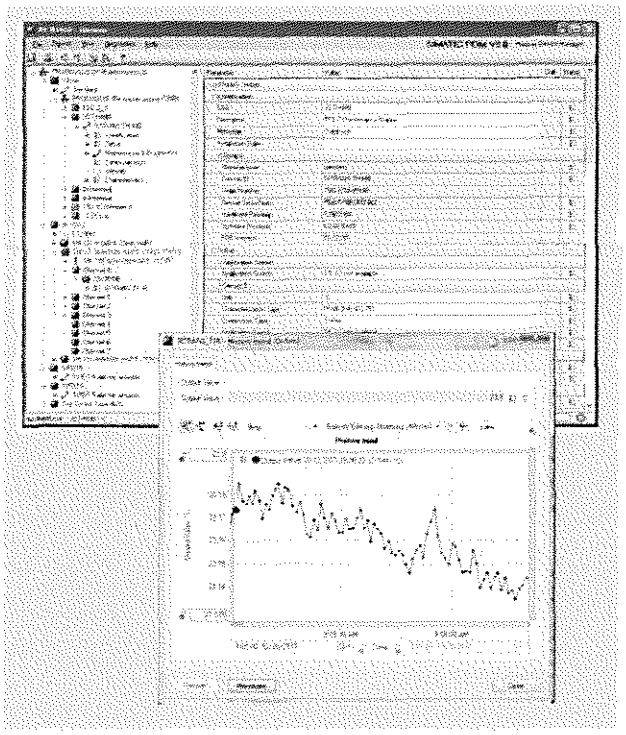

SIMATIC PDM, parameter view and trend window

Communications and routing

SIMATIC PDM supports several communication protocols and components for communicating with devices that have the following interfaces (others on request):

- PROFIBUS DP/PA interface
- FOUNDATION Fieldbus (FF) interface
- PROFINET interface
- HART interface (modem, wireless)
- Modbus interface
- HART over PROFIBUS/PROFINET

From the central engineering system of the SIMATIC PCS 7 process control system, one can use SIMATIC PDM to navigate to the connected devices via the various bus systems and remote I/Os. As a result of this plant-wide routing, each device which can be parameterized per EDD can be processed from a central position as follows:

- Read device diagnostics information
- Modify device settings
- Adjust and calibrate devices
- Monitor process values
- Generate simulation values
- Reassign device parameters

For additional information on SIMATIC PDM, see:
www.siemens.com/simatic-pcs7/pdm

© Siemens AG 2013

Operator system

Safe and user-friendly process control with the SIMATIC PCS 7 Operator System

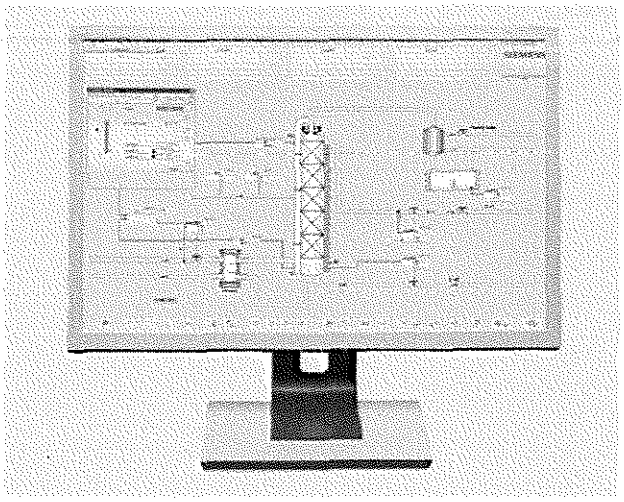

SIMATIC PCS 7 Operator Station

The operator system of the SIMATIC PCS 7 process control system permits user-friendly and secure execution of the process by the operating personnel. Operators can monitor the process sequence using various views, and intervene as necessary. The operator system architecture is extremely variable and can be flexibly adapted to different plant architectures and customer requirements.

The basis is formed by perfectly coordinated operator stations for single-user systems (OS Single Stations) and for multiple station systems with client/server architecture.

Operator stations

All operator stations are based on modern SIMATIC PCS 7 Industrial Workstations optimized for use as OS single station, OS client or OS server.

SIMATIC PCS 7 Industrial Workstations are characterized by powerful industrial PC technology combined with the Microsoft Windows 7 Ultimate 64-bit or Server 2008 R2 Standard 64-bit operating system. They can be used in harsh industrial conditions as well as in the office area. Standard components and interfaces from the PC world offer generous scope for system-, customer- or sector-specific options and expansions.

The connection of as many as 4 process monitors via an optional multi-monitor graphics card permits the user-friendly control of multiple plant areas from a single operator station.

The system software of the operator stations can be expanded flexibly using cumulative SIMATIC PCS 7 OS Runtime licenses for 100, 1 000 and 5 000 process objects (POs) up to following configuration limits:

- 5 000 POs per OS Single Station
- 8 500 POs per OS Server (with client/server architecture)

Single-user system (OS single station)

In a single-user system architecture, all operator control and monitoring functions for a complete project (plant/unit) are concentrated in one station. A flat system configuration with up to 8 OS single stations can be implemented. In this case, two stations form a redundant pair of OS single stations that can be expanded by up to six OS single stations as reference stations. The configuration process can be rationalized in this case by duplication of a basic project.

The Process Historian is used in this configuration for long-term archiving.

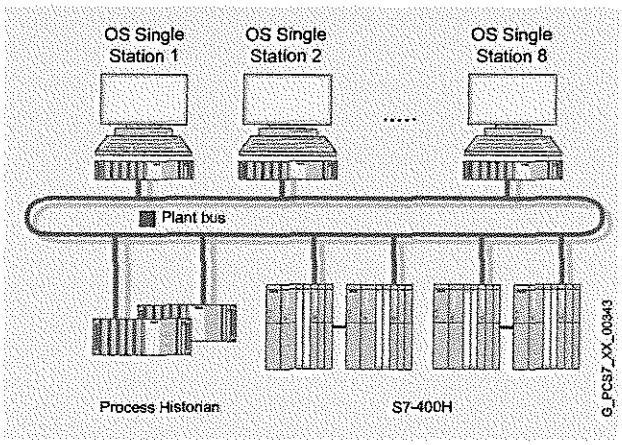

Example of a flat system architecture

The OS single station can be connected to the Industrial Ethernet plant bus in two ways:

- CP 1613 A2/CP 1623/CP 1628 communication module for communication with a maximum of 64 automation systems of any type
- Simple 10/100/1000 Mbit/s Ethernet network card and Basic Communication Ethernet for communication with up to 8 automation systems (single stations)

© Siemens AG 2013

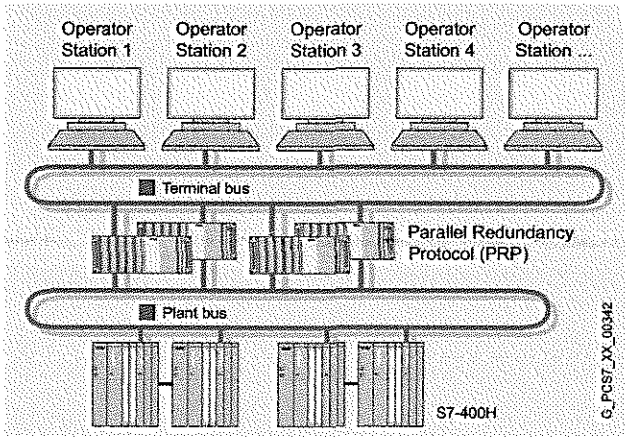

System architecture with redundant terminal and plant buses

Multiple station system with client/server architecture

With a multi-user system, one or more OS Servers supply up to 32 operator stations (OS clients) with data (project data, process values, archives, and messages) via a terminal bus. The terminal bus can share the transmission medium with the plant bus or it can be designed as a separate bus (Ethernet with TCP/IP).

In this architecture, redundant OS servers may be set up to meet higher availability requirements. Critical applications are monitored by health check for software faults. If a fault is detected, switchover to the redundant system is triggered. Synchronization of the redundant OS servers takes place automatically and at high speed.

OS clients can access the data of not only one OS server/server pair, but of several at the same time (multi-client mode). This makes it possible to divide a plant into technological units and to distribute the data accordingly to various OS servers/pairs of servers.

In addition to scalability, the advantage of distributed systems is the ability to decouple plant areas from each other, which results in higher availability.

SIMATIC PCS 7 supports multiple station systems with up to 12 servers or 12 redundant pairs of servers. In multi-client mode, OS clients can access data from one or more of the 12 servers/pairs of servers in parallel (up to 32 OS clients simultaneously can access all).

The OS servers are designed in addition with client functions which permit them to access the data (archives, messages, tags, variables) from the other OS servers of the multiple station system. This means that process graphics on one OS server can also be linked with variables on other OS servers (area-independent displays).

Operator system, configuration limits	
Max. number of OS single stations	8
Max. number of OS servers/pairs of servers	12
Max. number of automation systems per OS server/pair of servers	64
Max. number of OS clients in multi-client mode [1] (per multiple station system)	32
Max. number of monitors per operator station with multi-channel operation	4
Max. number of OS areas	64
Max. number of windows per monitor	1 to 16 (adjustable)
Number of trends per trend window	10
Selection time for OS area display (100 process symbols)	< 2 s
Max. number of process objects	
■ Per OS single station	5 000 POs
■ Per OS server	8 500 POs
Max. number of configurable messages per server	150 000
Number of process tags	
■ Per OS single station	approx. 3 000
■ Per OS server	approx. 5 000
■ Per multiple station system	approx. 60 000
Integral high-performance archive system (circular buffer), based on Microsoft SQL server, for:	
■ Process value archiving (per OS server/single station)	Approx. 1 000/s
■ Message archiving (per OS server/single station)	Continuous load approx. 10/s Message burst approx. 3 000/4 s

[1] If every OS client has access to all OS servers/pairs of servers

Performance

The SIMATIC PCS 7 Operator System is optimized for processing large quantities of data. It impresses by means of its simple and intuitive operation and its high performance – even with large quantity frameworks. Many individual measures reduce the system load and improve the image selection and updating times, e.g.:

- Combination of status and analog values with alarm information into expanded status displays
- Suppression of nuisance alarms and triggering of renewed transmission via acknowledgment
- Data transmission from the automation system only following changes instead of with every cycle
- Blocking/enabling of messages for individual process tags or all tags of an area
- Hiding messages, depending on the operating state of the unit

© Siemens AG 2013

OS software

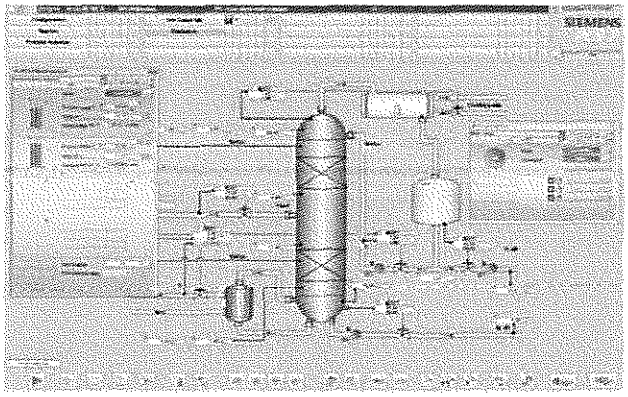

Example of OS process control, with freely-positionable windows

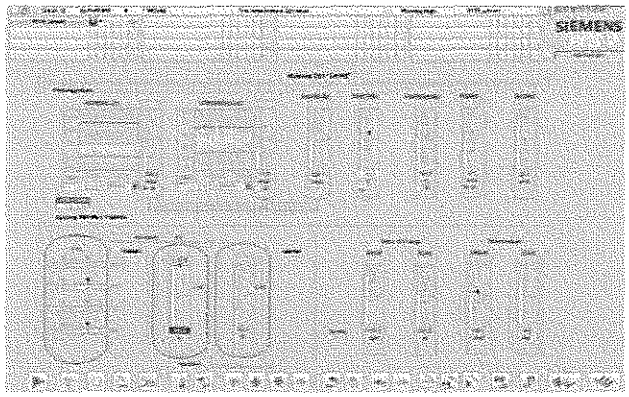

Innovative display design for predictive and safe process control

Graphical User Interface (GUI)

The predefined GUI of the operator system has all the features typical of a control system. It is multilingual, clearly structured, ergonomic and easy to understand. Operators can survey the process extremely easily, and rapidly navigate between different views of the plant. The system supports them in this process with hierarchical display structures that can be configured as required. These facilitate the direct selection of lower-level areas during process control. The current position within the hierarchy can always be seen in a window of the Picture Tree Manager.

Mimic diagrams and process tags can also be called directly by their name, or by a "Loop-in-alarm" starting from a selected message. An online language selector permits the user to change the display language during runtime.

A standard view and a server view are available for the technological representation of a process cell, each with variously designed area overviews. Features provided in both views include:

- Message line for the last received message, configurable for priority-based display of message with highest message class or priority
- Date, time and name of the operator
- Area overview; number of displayed areas depends on resolution: up to 36 (lowest/XGA), up to 144 (highest/WQXGA)
- Working area for plant displays and movable windows for faceplates, trends, messages etc.
- System function keys

Based on this, the operator can combine and save individual image compositions,and recall them later.

The operator system software supports the representative functional display of the plant with a high-quality and modern design; depending on the versions of the graphics controller and process monitor, display is possible in:

- 4:3/5:4 formats with resolutions of 1024 x 768 to 1600 x 1200
- 16:9/16:10 panorama formats with resolutions of 1680 x 1050 to 2560 x 1600

The global appearance can be set using predefined or user-specific designs (color palette, colors, styles, optical effects, etc.). These central design settings can be changed locally for each picture object. In addition, the design can be fundamentally influenced using a wide range of attractive elements provided in the Engineering System for OS configuration:

- Object palettes with styles, controls, standard objects and smart objects
- Global symbol library with standardized display objects
- Symbols and faceplates of the Advanced Process Library

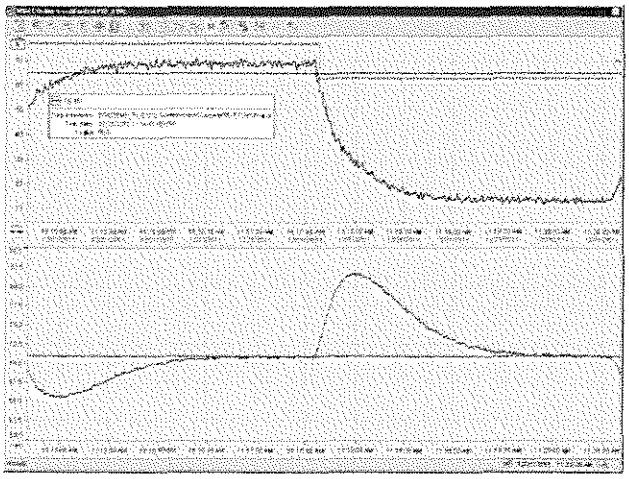

Trend window on the operator station

TrendControls for table displays and trend displays

The TrendControls function permits operators to display archived values of archive tags from the process value archive as well as online values of process tags from the tag management in relation to time (table/trend window) or in relation to another value (function window). The time can be defined statically or dynamically (in relation to the actual system time) as:

- Start and end times
- Start time and period
- Start time and number of measuring points

All TrendControls have scrolling functions and a function for directly selecting the start or end.

During runtime, operators can individually adapt the TrendControls functions which have already been predefined during plant configuration, and save the settings globally or user-specific. They are able to change the data link during runtime, and to access other data. It is also possible to integrate exported archive databases online.

The displayed data can be processed further by:
- Exporting per CSV file
- Output in a predefined print job

Table window
- Display of one or more process value columns in relation to a time column
- Each line displays the process values recorded at a particular time
- Several separate time/value relations can be combined in a table

Trend window
- One or more time axes correlate with one or more value axes (linear, logarithmic, percentage or freely-configurable scales)
- Freely-selectable number of displayed trends
- Individual configuration of styles and colors, possibly with value-dependent change in color
- Grid lines and rulers for improvement of readability
- Trends can be grouped in one window with common time and value axes
- Multiple trend windows can be linked for comparison purposes (common time axis, zoom, scroll bar and ruler)

Function window
- Display of process values in relation to other process values, e.g. pressure depending on temperature
- Fixed or dynamic value range with linear or logarithmic scaling for X and Y axes
- Displayed time range can be defined separately for each trend
- Optional consideration of setpoint trends from user archives
- Properties, functions and configuration options largely identical to trend window

A ruler window can display the following information for a time or time range selected by a ruler in the trend/table window:

- X and Y coordinates of the trend points at the points of intersection of the rulers
- Values in the selected range
- Statistical information on the selected range: minimum, maximum, average, standard deviation, integral

AlarmControl function for message display and processing

Up to 150 000 messages can be configured per OS single station/OS server:

- Predefined system messages, triggered by a system event
- Individual or group messages, initiated by a change in process states
- Operator input messages, resulting from the manual operation of objects

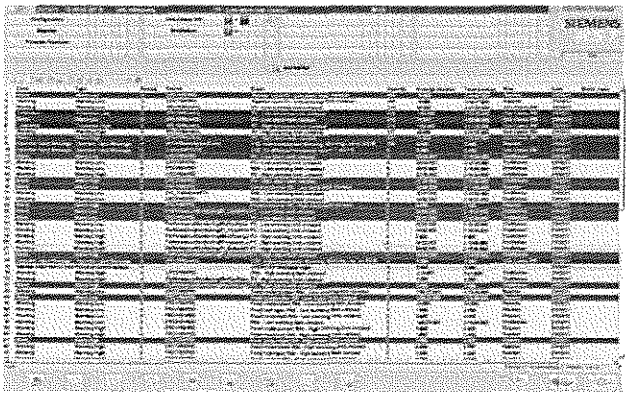

Message view of operator station

The message system integrated in the operator system records these process messages and local events, saves them in message archives, and displays them in various standardized lists by means of the freely-configurable AlarmControl function (message window):

- Entered state list: currently present, unacknowledged messages
- Acknowledged list: currently present, acknowledged messages
- Exited state list: unacknowledged messages, but already exited
- Operator list: current and archived operator input messages
- Process control list: current and archived I&C messages
- Chronicle: all currently present and archived messages arranged in chronological order
- List of manually or automatically suppressed messages
- List of messages to be suppressed when they occur

The lists are provided with a scrolling function and can be selected by the operator in the toolbar.

Parallel to the display, all messages recorded during runtime and their changes in state can be documented in chronological order in a message sequence log.

Flexible setting options for audible output and priorities which can be defined using signal variables additionally support the signaling of messages through a sound card or by controlling external horns via a signal module.

By filtering, selecting or sorting the display according to the contents of individual message blocks, e.g. chronologically according to message priority or fault location, the operator can individually adapt the AlarmControl function during runtime. It is also possible to integrate archive databases online. The settings can be saved globally or user-specific.

The data can be processed further by:

- Exporting per CSV file
- Output in a predefined print job

After a power failure, the last messages can be reloaded from the message archive to the message window. Thus, when the system is restarted, the last message map prior to the power failure can be reconstructed.

In the case of large quantity structures with a high volume of messages, the following measures can improve transparency and perceptibly offload the operating personnel:

- Situation-based hiding of visual and audible operating messages which are insignificant e.g. for safe and fault-free operation of the plant (complete logging and archiving):
  - Dynamically, depending on preconfigured definition for up to 32 operating states (Smart Alarm Hiding)
  - Manually, for a limited period
- Assignment of priorities using up to 16 message priorities as additional attribute to the known message classes
- Intentional blocking/enabling of messages from an individual process tag or all process tags of the display/area, e.g. in the event of faults on a sensor/actuator or during commissioning (recorded in operator activity log)

The "Loop-in-alarm" and "Select display using process tag" functions support the quick evaluation and elimination of faults. Via "Loop-in-Alarm", the operator goes directly from a message selected in the message window to the process image with the object that caused the fault. Here the operator can also call the associated block icon (loop display) via the tag for which the block icon is color highlighted. The faceplate window can be anchored so that it remains visible even when the display is changed.

Group displays visually signal the messages currently present in the mimic diagram. They do not provide information on whether messages are disabled or not.

The last received message is displayed at the top of the standard view. Using the button "Extended message line", the AlarmControl function can be displayed as a window with all received messages. A list of all messages currently present with maximum priority 16 can also be directly called using a button.

User-configurable message classes
In the case of new projects, the user can decide to apply six free-configurable alarm classes instead of the previous message concept. The connection between the event and an alarm class can be redefined specific to the instance.

Reporting and logging system

Whereas the reporting system is provided to document the project during its configuration, the logging system is used to print out the data recorded during operation in a clear manner. Different types of predefined logs are available:

- Message sequence log
- Message and archive log
- Measured value log
- Operator activity log
- System message log
- User log

However, a page layout editor can be used to create completely new page layouts or to individually adapt predefined ones. Log objects to be printed are simply selected from the editor's object palette, positioned and configured.

The current log data is output in the assigned page layout on the printer by means of a predefined or self-generated print job. Prior to output on the printer, the logs can be saved in EMF format and displayed as a preview on the screen. Print jobs can be started manually, time-driven or event-driven. Operators are able to scan the status of the print jobs online.

Archiving

The OS single stations and OS servers have an integral high-performance archiving system which can be configured during runtime and which is based on Microsoft SQL server technology. With this, process values and messages/events (alarms) can be temporarily recorded in circular archives. Data can be can be transferred from this historical alarm list to an archive server (Process Historian) for long-term archiving on a time-driven or event-driven basis.

Central user management, access protection and electronic signatures

With the integrated SIMATIC Logon, the operator system has central user administration with access control that complies with the validation requirements of 21 CFR Part 11. The administrator can divide the users into groups and assign differently defined access rights (roles) to these groups. The operator obtains the specific rights when logging on within the scope of the access control. Apart from the keyboard, an optional chip card reader, for example, can be used as the logon device.

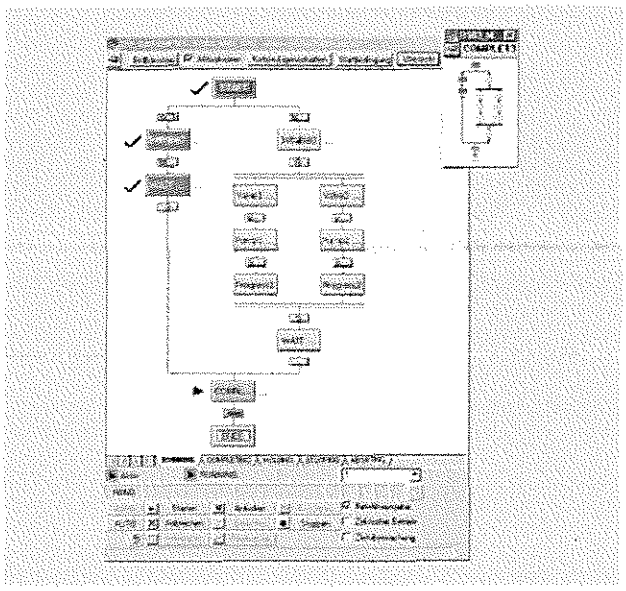

SFC visualization

SFC visualization

The SFC visualization function of the operator system enables display and operation of the sequential controls configured with the SFC editor in the same way as on the engineering system. This does not involve any extra configuration effort.

In an overview display it is possible, for example, to open step and transition displays and to present step comments or dynamically supplied step enabling conditions.

Sign-of-life monitoring

With the "Sign-of-life monitoring function", the operator system is able to monitor the correct operation of all subordinate systems connected to the plant bus. A graphical plant configuration display shows the status of each monitored component. Additional functionality in this respect is offered by the SIMATIC PCS 7 Maintenance Station.

Clock synchronization

Together with a SICLOCK time generator, the operator system of the SIMATIC PCS 7 process control system can implement system-wide synchronization on the basis of UTC (Universal Time Coordinated). This feature is especially beneficial for widely distributed plants present in different time zones, e.g. pipelines.

© Siemens AG 2013

Operator system highlights

- Flexible, modular architecture with scalable hardware and software components for single-user and multiple station systems
- Powerful, rugged operator stations based on standard PC technology, that can be used in office and industrial environments
- OS single stations and OS servers that can also be configured as redundant pairs
- Client/server multiple station systems with up to 12 OS servers/pairs of servers, each for 8 500 POs and up to 32 OS clients per server/pair of servers
- User-friendly process control and high reliability with ergonomic graphical user interface
- Health check for important server applications
- Modification and copying of modifications without interrupting runtime operations, and online testing with selective loading of redundant servers
- Optimized AS/OS communication:
  Data transmission only following change in data, independent of AS reply cycle
- Versatile, user-friendly controls for alarms and trends
- Variable, customer-oriented logging system
- Highly effective alarm management provides support for operating personnel
  - Assignment of priorities with up to 16 message priorities as additional attribute to the message classes
  - Visual and audible hiding of messages which are irrelevant depending on the operating state (dynamic or manual)
  - Suppression of alarms from a sensor/actuator during commissioning or in event of malfunction
- High-performance archiving system with circular archives and integral archive backup, that can be combined with a separate archive server for long-term archiving (Process Historian)
- Central user management, access control, electronic signature
- Sign-of-life monitoring for subordinate systems connected to the plant bus
- System-wide time synchronization based on Universal Time Coordinated (UTC)

© Siemens AG 2013

Operating and monitoring via Internet/intranet

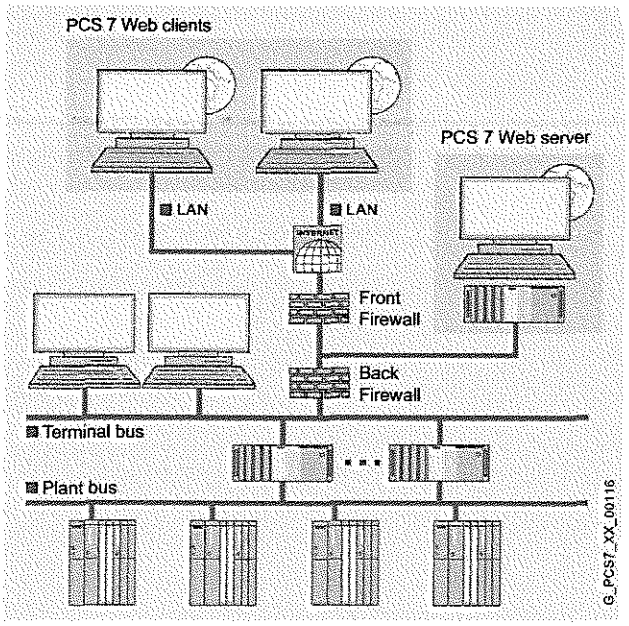

PCS 7 Web Server for operator control and monitoring via Internet/intranet

The SIMATIC PCS 7 process control system also supports global operator control and monitoring of a plant via Internet/intranet. Here the operator has access via the PCS 7 Web client to the project data provided by the PCS 7 Web server. The PCS 7 Web client uses Internet Explorer and plug-ins which can be installed via Internet/intranet.

The PCS 7 Web server uses the Web View Publisher to convert process displays and scripts into a form suitable for display with the Internet Explorer. It accesses project-specific process data in the lower-level OS servers using the mechanisms of a multi-client. The integrated OS user management guarantees a high degree of security here.

Using the PCS 7 Web client, the plant can be operated as with a PCS 7 OS client. The operator must log on in the same way here, and the rules for assigning rights are also identical. The input operations made on the PCS 7 web client are recorded in the OS operating log.

When operating and monitoring via the World Wide Web, the plant is exposed to diverse threats to IT security. To guarantee safe operation, suitable protective measures must thus be taken (you can find more information on this in the section "Industrial Security").

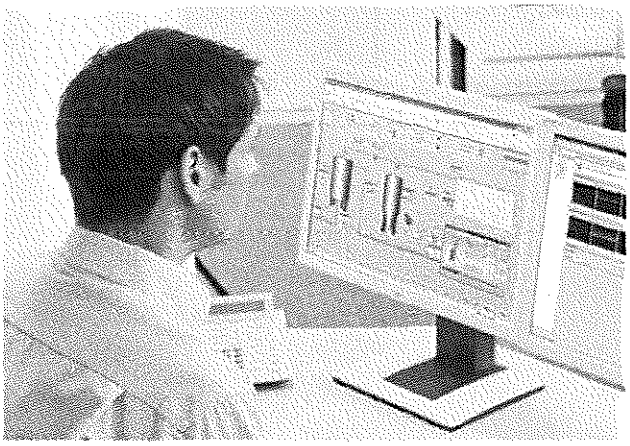

Licensing

With regard to licensing, a distinction is made between the following constellations:

- **Standard**
  Up to 50 PCS 7 web clients access the data of a PCS 7 web server over intranet/Internet. The number of PCS 7 Web clients that have simultaneous access to the PCS 7 Web server is scalable with cumulative 1, 5 and 10 PCS 7 Web server licenses. In addition, the PCS 7 Web server requires a SIMATIC PCS 7 Web Server Basic license.
- **Diagnostics**
  One or only a few PCS 7 web clients have access to several PCS 7 web servers for remote operation, diagnostics or monitoring. Each system involved requires a PCS 7 Web diagnostics license (server/client).

Load balancing

If the project requires simultaneous operation of a large number of Web operator stations, several PCS 7 Web servers can also be configured and networked together. With the load balancing function, the load caused by the PCS 7 Web clients can be distributed evenly over the configured PCS 7 Web servers. This results at the same time in high availability of the PCS 7 Web clients. If a PCS 7 Web server fails, the PCS 7 Web clients assigned to it are automatically routed to one of the other participating PCS 7 Web servers. Load balancing can be used on up to 32 networked PCS 7 Web servers.

© Siemens AG 2013

Process data archiving and reporting

Process Historian and Information Server

Process values and messages, as well as batch data from SIMATIC BATCH, can be swapped out of the circular logs from the operator stations to the Process Historian on a time-driven or event-driven basis for long-term archiving.

The Process Historian is suitable for all plant sizes. The number of archivable single stations, servers or server pairs is unrestricted.

The process values and alarms managed in the database of the Process Historian on the OS clients and OS single stations can be visualized in a user-friendly and clear manner. Data selection is supported by integrated filter functions. Alarms and process values can be shown in table form, and process values also in graphic form. Tables of process values can be exported to CSV format for processing in other Windows applications, e.g. Microsoft Excel.

The data managed by the Process Historian can be transferred to commercially available storage media (backup/restore). The operating system of the Process Historian supports additional hardware and software for this purpose, e.g. a DVD burner with appropriate burner software.

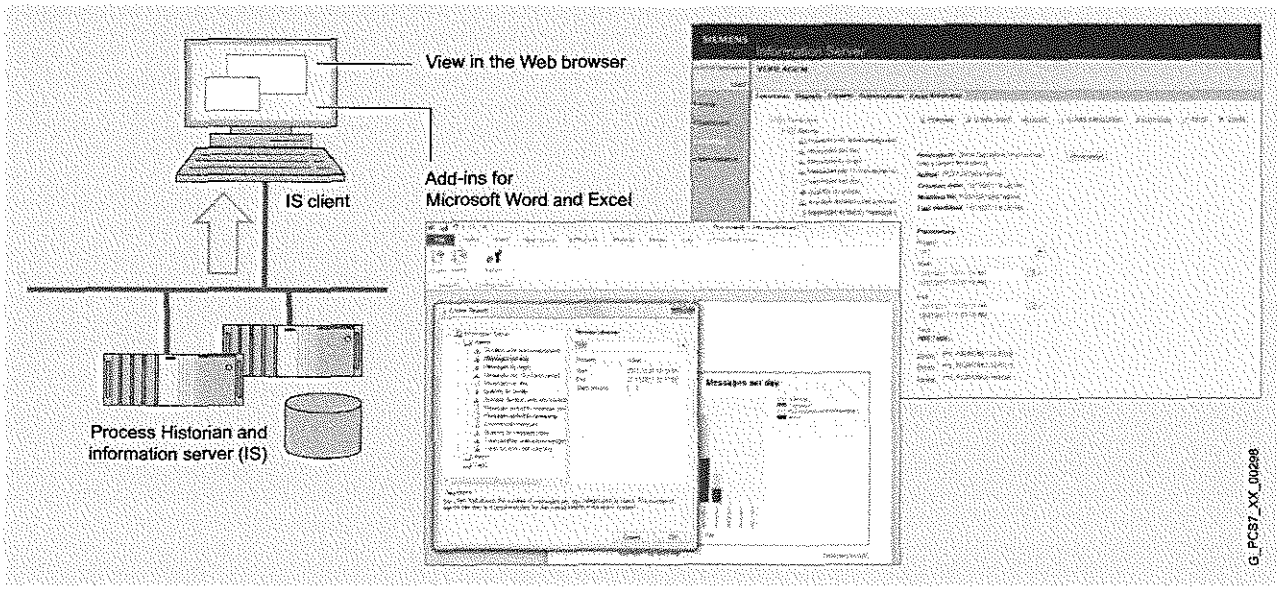

Methods of accessing the Process Historian data stock

© Siemens AG 2013

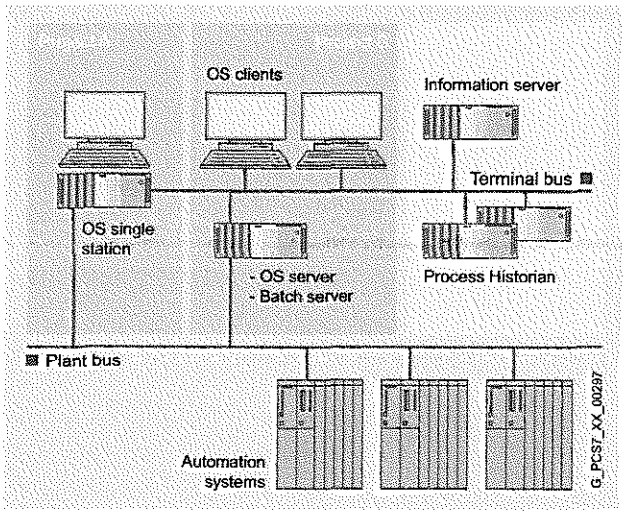

Visualization of the data from the Process Historian database is supported by an additive reporting system, the Information Server. Based on the Microsoft Reporting Services, it allows Web-based thin-client access to historical data. Add-ins for Microsoft Word und Excel offer additional methods of accessing the Process Historian database. The number of clients that have access to the Information Server can be regulated with cumulative Client-Access licenses.

The Information Server is able to access one data source or multiple data sources in parallel. In addition to archive data of the Process Historian, these can also be archive data from operator stations (OS single station/OS server). It can therefore also be used for plant reporting independent of the Process Historian. Direct reading of data from operator stations is authorized by means of cumulative data source access licenses according to the number of sources.

Depending on how important the availability of archive data is for the plant operator, the Process Historian can be configured either as a single server or a redundant pair of servers.

Suitably, either the server version of the most powerful SIMATIC PCS 7 Industrial Workstation (IPC847C) or a Fujitsu Primergy Server is used for the Process Historian. A RAID 5 hard disk configuration with high data transfer rates is used for the database. An additional, separate hard disk must be provided for the operating system and the SIMATIC PCS 7 software.

The Information Server can be operated on the Process Historian hardware or on separate hardware. Any OS client version of the SIMATIC PCS7 Industrial Workstation is suitable for separate operation.

The Process Historian and Information Server do not need a connection to the plant bus. They can be connected to the OS and batch stations of the SIMATIC PCS 7 system via the terminal bus.

Both can run under the Windows Server 2008 R2 Standard 64-bit operating system, and the Information Server can also run on separate hardware under Windows 7 Ultimate 32/64-bit or Windows Server 2003 R2 Standard 32/64-bit.

The change in product from an existing Central Archive Server (CAS) to the Process Historian is supported by conversion packs and a wizard for CAS database migration.

Archiving and visualization functions

- Real-time archiving of the process values and messages of OS single stations und OS servers
- Archiving the batch data of SIMATIC BATCH
- Support of multiple SIMATIC PCS 7 projects
- Scaling of the performance and configuration limits of the basic hardware employed
- Swapping out of the data to external storage media
- Reading in of swapped-out data from external storage media
- Data visualization on the OS clients/OS single stations:
  - Configuration of views (picture windows and masks) including the selection criteria for displaying the data
  - Visualizing of messages in table form dependent on filter functions
  - Displaying of process values in table or graphic form dependent on filter functions
  - Visualizing a batch overview (it is possible to select the detailed log of a batch from the batch overview)

Reporting functions

- Set of conventional report templates for process values, alarms and batches
- Free creation of any number of new report templates
- Storage of configured report templates for fast access
- Report export in common document formats
- Subscriptions for cyclic report generation including e-mail service
- Creation and storage of role-based dashboards
- Role management for Windows users
  - Active Directory and workgroups are supported
  - Access authorization can be assigned for each project
- Integrating reports into Word documents as pictures
- Creation and storage of Excel report templates for historic process values and alarms
- Subscriptions for Excel report templates

For additional information, see:
www.siemens.com/simatic-pcs7/processhistorian

© Siemens AG 2013

Diagnostics and maintenance

Plant Asset Management with the Maintenance Station

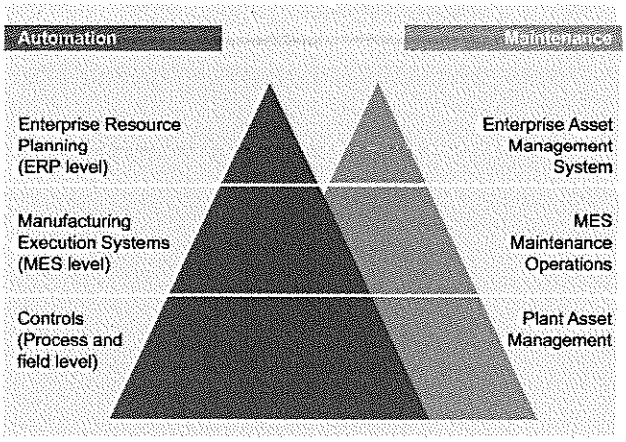

Plant automation and maintenance in process engineering

The Maintenance Station supplements SIMATIC PCS 7 with a valuable instrument for minimizing the total cost of ownership of a plant.

If one considers the total maintenance involved in an enterprise then the Maintenance Station is focused on the area of Plant Asset Management". Asset management for plant engineering is the administration and management of plant equipment, particularly the I&C equipment, as well as all activities and measures that serve to retain or increase the value of a plant. This includes the following maintenance strategies:

- Corrective maintenance:
  Response to existing fault and diagnostics messages
  - Failures are risked or minimized by redundant configurations
  - Maintenance in the form of a repair or replacement
- Preventative maintenance:
  Preventative diagnostics and maintenance
  - Appropriate maintenance measures are initiated before a fault even occurs
  - Maintenance in the form of time-dependent or status-dependent maintenance (dependent on degree of wear)
- Predictive maintenance:
  Predictive diagnostics for timely detection of potential problems and to determine the remaining service life.

While the plant operator obtains all relevant information that is necessary for focused intervention in a process via the operator system, maintenance and service personnel can check the hardware components of the automation system (assets) and process their diagnostic messages and maintenance requests using the Maintenance Station. For this the Maintenance Station offers access to:

- Components of the process control system: Intelligent field devices and I/O modules, fieldbus, controller, network components, and plant bus, as well as servers and clients of the operator systems
- Assets that do not belong directly to the process control system, such as pumps, motors, centrifuges, heat exchangers (mechanical assets) or control loops – represented by proxy objects in which the diagnostics rules are stored

Typical maintenance cycle

A typical maintenance cycle has the following actions:

- Monitoring the status of components/devices:
  - Recording of diagnostics information via network components and PC basic devices per OPC coupling
  - Intelligent sensors detect and signal impending failures long before the actual failure
- Signaling the "maintenance required" in a group display, in symbol displays of the affected components/devices, and in an alarm log
- Navigation to component/device requiring maintenance, and information on specific data such as measuring-point number, mounting location and device type
- Display of detailed diagnostic information (depending on device type and vendor), e.g.
  - Error description
  - Error cause
  - Trend statement
  - Operating instruction
- Evaluation, commenting and, if applicable, changing the priority of the maintenance requirement
- Initiation of a maintenance measure per maintenance request and tracking of execution; symbolic visualization of current status of maintenance measure
- Conclusion of maintenance measure; all status displays are reset to their normal state

All activities are documented on the maintenance station without gaps – automatically and without additional configuration overhead.

© Siemens AG 2013

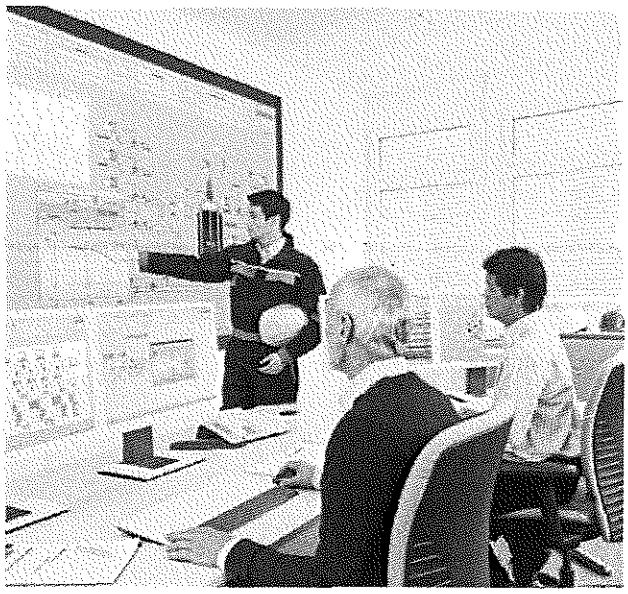

Architecture

For asset management, the Maintenance Station uses hardware and software components of the Engineering System (ES) and Operator System (OS). As a result of the close interlacing, ES, OS, and Asset Management functions execute on common hardware. Such a multi-functional station cannot only be used for asset management, but also for system engineering or HMI.

Depending on the project-specific SIMATIC PCS 7 architecture, the Maintenance Station can be implemented on the basis of a SIMATIC PCS 7 BOX, a Microbox (as stand-alone maintenance station), a SIMATIC PCS 7 Single Station, or a client/server combination. In client/server combinations, the Maintenance Station server can also have a redundant design. In this case, they must be configured like redundant OS servers.

Message system, GUI, picture hierarchy and operator prompting are oriented according to the HMI philosophy of the operator system. The diagnostics data of all assets are displayed on uniform faceplates whose functions and information depend on the components. This means that working with the Maintenance Station is simple and intuitive, complex familiarization is not required.

The diagnostics screens structured according to the process cell hierarchy with the operating states of the SIMATIC PCS 7 components can be displayed on the Maintenance Station and also on the OS clients. More detailed diagnostic information determined by SIMATIC PDM is also displayed on the faceplates of these stations. Enhanced online diagnostics functions in conjunction with HW Config can also be called from the Maintenance Station.

The user management and access control for the Maintenance Station is handled by SIMATIC Logon integrated in SIMATIC PCS 7.

Configuration

For asset management, the Maintenance Station uses the relevant data from the hardware and software project of the application which is generated during the standard configuration with the Engineering System. Simply by pressing a button, these data are derived with system support from the project data of the application, and the diagnostics screens are generated. The procedure is simple, and no additional overhead is required for configuration of the asset management:

- Generation of the hardware and software project of the application
- Configuring/parameter assignment of specific Maintenance Station functions and connections (optional)
- System-supported generation of the diagnostics screens with all components present in the project, including the picture hierarchy based on the project's hardware structure
- Compilation of the configuration data, and downloading to the operator station and Maintenance Station with subsequent test and commissioning phase.

The names of imported pictures, icons, etc. can be permanently changed for further use in the maintenance project.

Conformity to international standards, specifications, and recommendations

Asset Management with the SIMATIC PCS 7 Maintenance Station conforms to international standards, specifications, and recommendations. It takes into account the NAMUR requirements (standardization association for measurement and control in chemical industries) defined for systems for asset management at plant level and for status messages from field devices.

In addition, it follows the IEC 61804-2 for describing devices by means of the Electronic Device Description Language (EDDL) and specifications made by the PROFIBUS & PROFINET International (PI) organization, e.g.:

- PROFIBUS Profile Guidelines Identification & Maintenance Functions
- PROFIBUS PA Profile for Process Control Devices

© Siemens AG 2013

Asset Management function characteristics

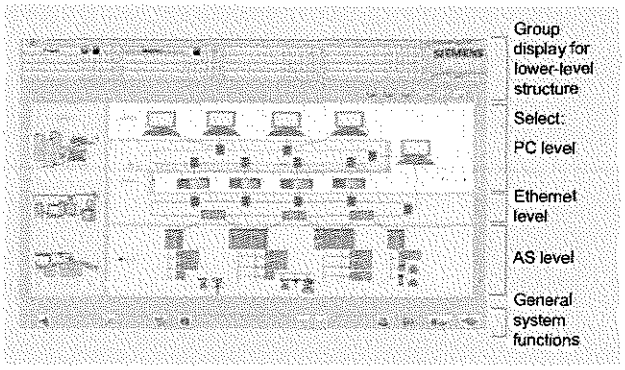

Plant overview with symbol displays for components

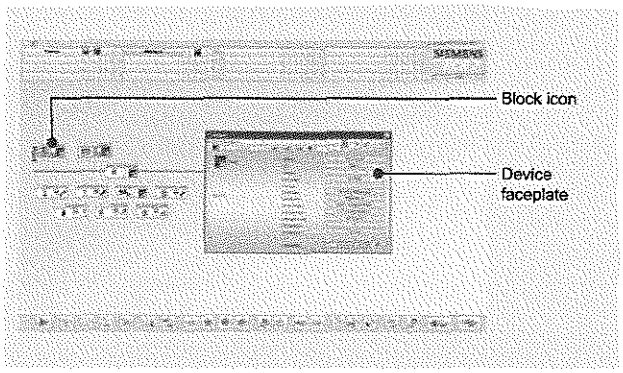

Overview of components on a PROFIBUS segment with symbol displays

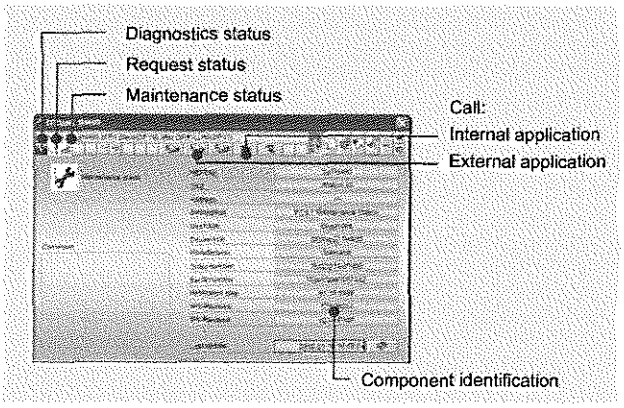

ID view of component

As the system interface to the maintenance engineer, the Maintenance Station provides integrated maintenance functions and information.

Standard diagnostics functions
Starting from the overview display, maintenance engineers can navigate to the diagnostics displays of the subordinate hardware levels to obtain information on the diagnostics status of individual plant areas or components. If a fault is signaled in the overview display, the "loop in alarm" function permits rapid switching to the diagnostics faceplate of the associated component. The information is filtered according to the area of responsibility of the user.

The following information can be displayed if applicable:

- Diagnostics status determined by the system
- Information on the component, such as process tag name, manufacturer or serial number
- Diagnostics messages of a component
- Detailed diagnostics information of a component
- Enabling of maintenance measure by the process operator
- Type and current status of initiated maintenance measure

Information on mechanical assets
A function block acting as a proxy for mechanical assets without self-diagnostics (pumps, motors, etc.) can determine impermissible operating states from different measured values and their deviations from a defined normal status. These are then displayed as a maintenance alarm. This function block is also suitable for implementing individual diagnostics structures, project-specific diagnostics rules, and condition monitoring functions.

In addition to this, individual asset management blocks are available with which maintenance engineers can monitor plant components such as pumps, heat exchangers or control valves.

Extended information for assets according to IEC 61804-2
Additional information can be called for assets described by the electronic device description (EDD) according to IEC 61804-2. This information is automatically read out of the components and made available by SIMATIC PDM in the background.

- Detailed diagnostics information
  - Device-specific information from the vendor
  - Information on fault diagnostics and troubleshooting
  - Additional documentation
- Results of internal condition monitoring functions
- Status information (e.g. local operation, local configuration changes)
- Display of modification logbook (audit trail) of the component with all entries on the persons, times and types of operator intervention on the component
- Parameter view of the assets (display of parameters saved in the component and in the project; if required, also differences between them)

© Siemens AG 2013

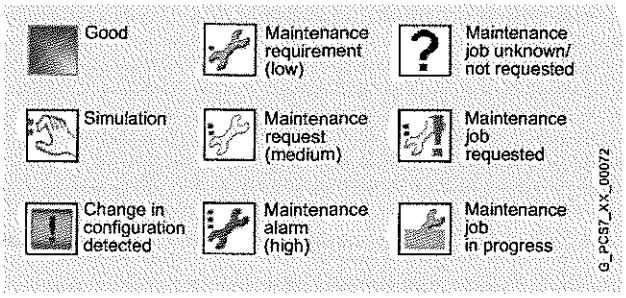

Extract from the PCS 7 asset management symbol set

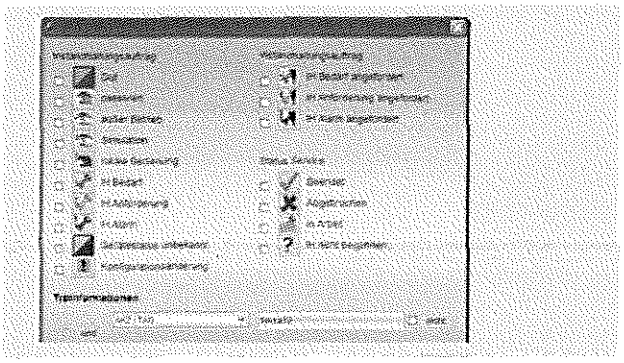

Filters for diagnostics statuses

Visualization of the maintenance information

The hierarchical structuring of information and the uniform symbols support the overview, facilitate orientation, and permit the maintenance engineer to rapidly access detailed information starting from the plant overview. The symbol set defined for asset management with the SIMATIC PCS 7 Maintenance Station contains symbols which identify the diagnostics status of the devices/components, the relevance of the maintenance request, and the status of the maintenance measure. Group displays in the plant overview visualize the diagnostics status of the subordinate structures/components according to a type of traffic light with red, yellow or green.

Diagnostics screens represent the status of components and subordinate devices/components through standardized symbols. These contain the following elements:

- Bitmap of component
- Tag identification of component
- Maintenance state display
- Group display for diagnostics status of subordinate components

Clicking an element in the symbol display either opens the subordinate hierarchy level or a component faceplate. The component faceplate offers various views of the associated component with additional device-specific information, e.g. an identification, message or maintenance view.

Information management

With the following functions, the maintenance engineer can forward classified information quickly and simply, access project-specific information databases, or request maintenance measures:

- Export of identity data (electronic rating plate) and associated diagnostics status for devices/components determined by filter (total export)
- Export of all the relevant information of a component (including the action defined in the project for the maintenance measure) to defined destinations, e.g. mail system, printer or pager (single export)
- Calling up to three applications (Web pages, programs, or databases) defined in the project, e.g. shift logs, documentation or enterprise asset management console

For additional information, see:
www.siemens.com/simatic-pcs7/plant-asset-management

Asset Management highlights

- Instrument for minimization of the total cost of ownership for the complete lifecycle of the plant
- Diagnostics and maintenance management for the components of the process control system and for mechanical assets such as pumps, motors or heat exchangers
- Maintenance station as system interface for maintenance engineer
- Uniform display of diagnostics and maintenance status throughout the plant
- Automatically generated overview of ID data with firmware and software versions for planning upgrades
- Function block for mechanical assets, individual diagnostics, and condition monitoring functions
- Additive blocks for plant components (pumps, heat exchangers, control valves, etc.)
- Recording of changes in configurations and parameters of EDD-based devices in the change log
- Generation of overviews on diagnostics statuses
- Integration of internal and external applications for special diagnostics and additional information
- Consideration of international standards and directives

© Siemens AG 2013

Automation systems

Scalable performance for every requirement

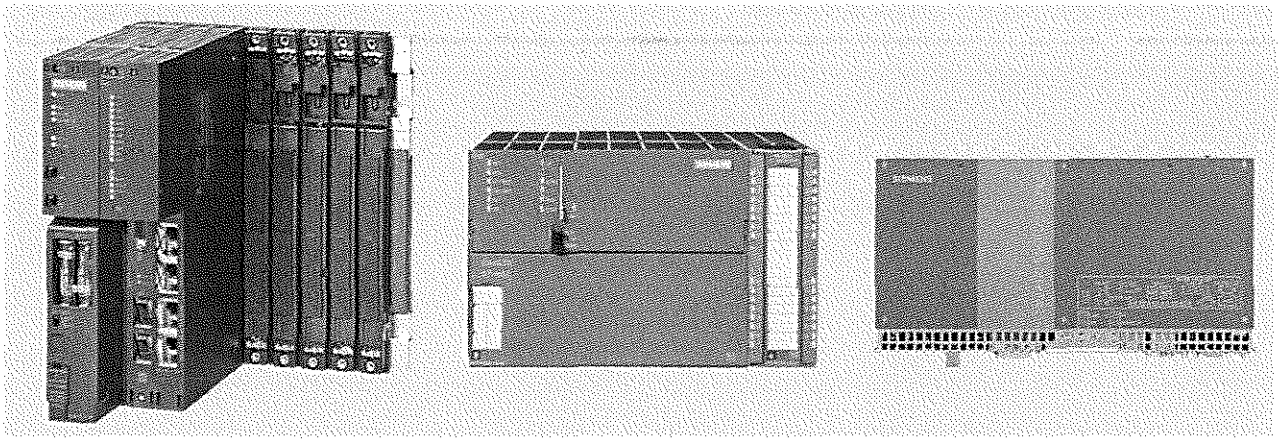

Designs of the SIMATIC PCS 7 automation systems: S7-400 system (left), modular embedded system (center), and Microbox system (right)

Automation systems in the three designs shown above are available for the SIMATIC PCS 7 process control system. The automation performance can therefore be finely scaled within wide limits.

SIMATIC S7-400 modular automation systems with hardware controller

The automation systems of the SIMATIC S7-400 range are extremely rugged, and are characterized by high processing and communications performance. With consideration of the price/performance ratio, selected components of the SIMATIC S7-400 are combined in bundles depending on the task. These "AS bundles" are available in two versions:

- Individual components bundled per system in one delivery
- Preassembled and tested all-in-one systems (no extra charge compared to delivery of individual components)

They are configured by selecting predefined ordering units.

Each AS bundle is combined with a SIMATIC PCS 7 Industry Library Runtime license and a SIMATIC PCS 7 AS Runtime license for 100 process objects (PO). The number of POs can be extended with cumulative Runtime licenses for 100, 1 000 or 10 000 POs.

Up to 8 PROFIBUS interfaces (single or redundant) can be configured for an automation system. By default the CPU of the automation systems comes with an onboard PROFIBUS DP fieldbus connection. Depending on the type of CPU, 1 or 2 further PROFIBUS DP interfaces are possible using additive IF 964 DP interface modules. PROFIBUS communications cards can be additionally fitted if required.

The PROFINET IO connection depends on the type: via CPU interface or via CP 443-1 communication module.

The following properties should be highlighted:

- Modular, fan-free design
- Extremely rugged and expandable
- Single and redundant versions
- Comprehensive communication facilities
- Integrated system functions
- Integratable safety functions (Safety Integrated)
- Simple linking of central or distributed I/O
- PROFINET IO support

In accordance with their functionalities, the modular automation systems of the S7-400 range can be classified into

- Standard automation systems
- Fault-tolerant automation systems
- Safety-related automation systems

The AS 410 all-round system offers maximum flexibility and covers the functionalities of all three classes.

© Siemens AG 2013

Standard automation systems

The modular standard automation systems of the S7-400 are available for universal use. These are always your first choice if fault tolerance or Safety Instrumented Functions are negligible.

Fault-tolerant automation systems

Fault-tolerant automation systems are used to reduce the risk of production failures. The higher investment costs are frequently negligible compared to the costs resulting from production failures. The higher the costs of a production failure, the more worthwhile it is to use a fault-tolerant system.

The two redundant and electrically isolated subsystems of the Redundancy Station can be mounted on one compact rack with divided backplane bus or on two separate racks. The design with two racks allows physical separation of the redundant subsystems over distances up to 10 km, e.g. separated by a fireproof partition. As a result of the electrical isolation, the system is insensitive to electromagnetic interferences.

Fault-tolerant SIMATIC PCS 7 automation systems can be used on their own or together with standard and safety-related automation systems.

Safety-related automation systems

Safety-related automation systems are used for critical applications in which an incident can cause danger to personnel, plant damage, or environmental pollution. These F/FH systems collaborate with safety-related F modules of the ET 200 distributed I/O systems or fail-safe transmitters connected directly via the fieldbus to detect not only faults in the process, but also their own, internal faults. They automatically bring the plant into a safe state in the event of a fault.

The safety-related automation systems are TÜV-certified and comply with the safety requirements up to SIL 3 in accordance with IEC 61508. They are based on the hardware of the fault-tolerant automation systems that has been expanded by safety functions by means of S7 F Systems.

Analogous to the basic systems, they are available in two versions:

- Single stations with one CPU, safety-related
- Redundancy stations with two redundant CPUs, safety-related and fault-tolerant

The redundancy of the FH systems is only used to increase the availability. It is not relevant to processing of the safety functions or the associated fault detection.

© Siemens AG 2013

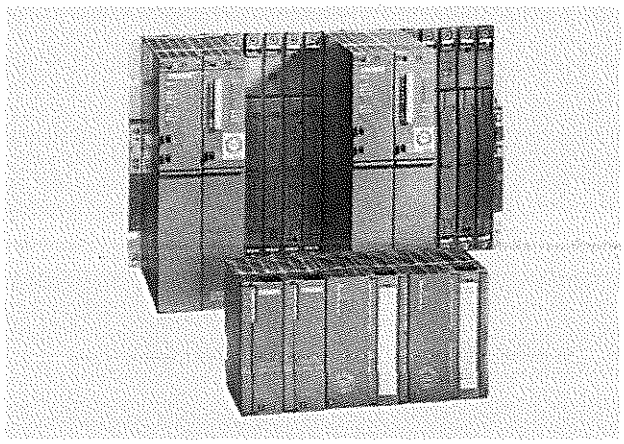

Safety-related automation system, ET 200M with F modules

In the multitasking systems, several programs can run simultaneously in one CPU, Basic Process Control System (BPCS) applications as well as safety-related applications. The programs are reaction-free, this means that faults in BPCS applications have no effect on safety-related applications, and vice versa. Special tasks with very short response times can also be implemented.

With parallel processing of BPCS and safety functions in one CPU, mutual interference is prevented by ensuring the BPCS programs and the safety-related programs are kept strictly separate and the data exchange is by means of special conversion function blocks.

The safety functions are processed twice in different processor sections of the CPU by means of redundant, diverse instruction processing. Potential errors are detected by the system during the subsequent comparison of results.

Safety programs executed on different F/FH systems of a plant are also able to carry out safety-related communication with one another over the Industrial Ethernet plant bus.

Flexible and scalable availability

A particular characteristic of the modular S7-400 systems is the flexible and scalable availability of various modules.

When planning a system, it is even possible with a Single Station to increase the availability at a specific point by means of redundant configuration of the power supply, or for the Industrial Ethernet communication module, and to combine these measures.

The Redundancy Station with its two redundant CPUs already offers a higher level of availability. It operates according to the 1-out-of-2 principle, where a switchover is made from the active subsystem to the standby subsystem in the event of a fault. Based on this, as with the Single Station the power supply or the Industrial Ethernet communication module can be doubled for each subsystem, and these measures can be combined.

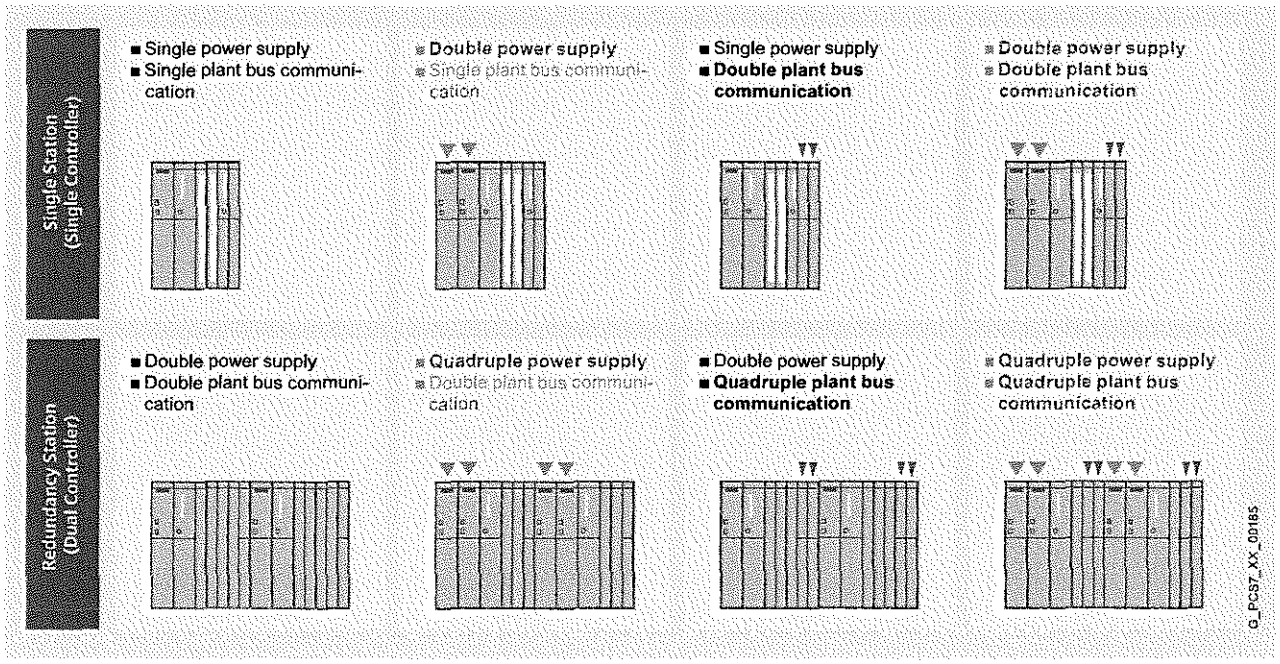

Flexible and scalable availability

© Siemens AG 2013

AS 410 automation system

The AS 410 is a new AS type in the SIMATIC S7-400 range which is exclusively envisaged for use in the SIMATIC PCS 7 process control system. With its innovative "CPU 410-5H Process Automation" and the appropriately optimized firmware, the AS 410 is able to cover the complete performance range of the SIMATIC PCS 7 automation systems (from AS 412H, via AS 414-3 and AS 416, up to the AS 417H). The performance is ultimately defined using process objects (PO). The resulting reduction in the number of types not only simplifies the stocking of spare parts, but also provides advantages for the complete lifecycle of the process control system.

The CPU 410-5H Process Automation already differs optically from all other current automation systems of the S7-400 range. It is equipped with one interface each for PROFINET and PROFIBUS DP. A second PROFINET interface is prepared for future use. Memory cards are not required since a load memory of 48 MB is integrated. A reset button replaces the previously used RUN/STOP switch.

Established SIMATIC S7-400 automation systems

AS type	Characteristics
Standard systems	
AS 414-3	Standard CPU, interfaces: 1 x MPI/DP, 1 x DP, 1x DP module can be inserted as option
AS 414-3IE	Standard CPU, interfaces: 1 x PN/IE (2 ports), 1 x MPI/DP, 1x DP module can be inserted as option
AS 416-2	Standard CPU, interfaces: 1 x MPI/DP, 1 x DP
AS 416-3	Standard CPU, interfaces: 1 x MPI/DP, 1 x DP, 1 x DP module can be inserted as option
AS 416-3IE	Standard CPU, interfaces: 1 x PN/IE (2 ports), 1 x MPI/DP, 1x DP module can be inserted as option
AS 417-4	Standard CPU, interfaces: 1 x MPI/DP, 1 x DP, 2 x DP module can be inserted as option
Fault-tolerant and safety-related systems	
AS 412H/F/FH	H-CPU (1 x or 2 x), interfaces: 1 x PN/IE (2 ports), 1 x MPI/DP, 1 x DP
AS 414H/F/FH	H-CPU (1 x or 2 x), interfaces: 1 x PN/IE (2 ports), 1 x MPI/DP, 1 x DP
AS 416H/F/FH	H-CPU (1 x or 2 x), interfaces: 1 x PN/IE (2 ports), 1 x MPI/DP, 1 x DP
AS 417H/F/FH	H-CPU (1 x or 2 x), interfaces: 1 x PN/IE (2 ports), 1 x MPI/DP, 1 x DP

Automation system with APL	AS 412H	AS 414-3	AS 414-3IE	AS 414H	AS 416-2	AS 416-3	AS 416-3IE	AS 416H	AS 417-4	AS 417H	AS RTX	AS mEC
	AS 410											
Analog value measurements	10	50	100	100	200	400	400	400	500	600	300	300
Digital value measurements	20	160	250	250	450	800	800	800	1 000	1 000	600	600
PID controls	5	35	50	50	75	150	150	150	180	200	200	200
Motors	7	40	75	75	100	200	200	200	350	400	150	150
Valves	7	40	75	75	100	200	200	200	350	400	250	250
SFC	0	15	15	15	40	100	100	100	200	200	100	100
Steps	0	150	150	150	400	1 000	1 000	1 000	2 000	2 000	800	800
Dosing	0	3	3	3	15	25	25	25	50	50	50	50
Digital inputs DI	30	200	350	300	600	1 200	1 200	1 200	1 700	1 800	1 200	1 200
Digital outputs DO	10	60	100	110	200	400	400	400	550	650	400	400
Analog inputs AI	15	100	175	150	300	600	600	600	800	900	600	600
Analog outputs AO	5	30	75	50	100	200	200	200	250	350	200	200
Process objects (PO)	30	200	350	350	600	1 200	1 200	1 200	1 800	2 000	1 200	1 200

Typical mixed configuration limits for SIMATIC PCS 7 automation systems, based on the SIMATIC PCS 7 Advanced Process Library (APL)

SIMATIC PCS 7 AS RTX Microbox automation system with software controller

The compact and rugged automation system based on the SIMATIC IPC 427C represents the starter system for the low to mid-performance range of SIMATIC PCS 7. The SIMATIC PCS 7 AS RTX designed for maintenance-free 24-hour continuous operation at ambient temperatures up to 55 °C works without fans and rotating storage media. This results in a high resistance to vibration and shock. Due to its excellent physical characteristics and compact dimensions the SIMATIC PCS 7 AS RTX is particularly suitable for small applications at plant level.

ET 200 remote I/O systems with connected sensors/actuators and field devices/process devices on PROFIBUS DP/PA can be connected over a PROFIBUS DP interface which also supports routing. Two 10/100/1000 Mbit/s Ethernet RJ45 interfaces allow integration into a SIMATIC PCS 7 plant bus.

Parameterizable monitoring functions for program execution/watchdog, processor and board temperatures, as well as enhanced diagnostics/alarms (e.g. runtime meter, system status) can be recorded and evaluated via SIMATIC IPC DiagMonitor and PCS 7 Maintenance Station or signaled by LED.

The SIMATIC PCS 7 AS RTX is supplied with an AS Runtime license for 100 POs which can be expanded up to 2 000 POs. The Windows XP Embedded 2009 operating system, the WinAC RTX controller software, and the SIMATIC IPC DiagMonitor diagnostics software are pre-installed on a 4 GB CompactFlash card. The system is configured using the SIMATIC PCS 7 Engineering System.

SIMATIC PCS 7 AS mEC RTX Embedded automation system with software controller

The SIMATIC PCS 7 AS mEC RTX is a rugged, fan-free automation system in S7-300 format. Its special feature is centralized expandability by means of adding up to 8 I/O modules from the S7-300 I/O range on the same mounting rail. This merges the controller and I/Os into a low-cost compact unit that can be used preferably in small applications and as an OEM product, e. g. in package units.

Sensors/actuators integrated via distributed ET 200M remote I/O stations can also be connected via PROFINET IO.

The SIMATIC PCS 7 AS mEC RTX can be connected to the SIMATIC PCS 7 plant bus via a 10/100/1000 Mbit/s Ethernet interface.

The SIMATIC PCS 7 AS mEC RTX can be fully integrated into SIMATIC PCS 7 and is configured using the SIMATIC PCS 7 Engineering System. The scope also includes an AS Runtime license for 100 POs which can be expanded up to 2 000 POs. The Windows XP Embedded 2009 operating system and the WinAC RTX controller software are pre-installed on a CompactFlash card.

Since SIMATIC PCS 7 AS mEC RTX and SIMATIC PCS 7 AS RTX use the same controller software, and both have a similar performance level.

Highlights of the automation systems

Modular systems of the SIMATIC S7-400 range

- Individually configurable AS bundles, available as:
  - Individual components, bundled in stations
  - Pre-assembled and tested stations
- Flexible and scalable availability:
  - Standard systems as Single Station, optionally with redundant power supply
  - Fault-tolerant and safety-related systems as single/redundancy station; redundant power supply and/or Industrial Ethernet interface as options
- Redundancy Station with two electrically isolated subsystems
  - One or two racks (distances up to 10 km)
  - Synchronous processing of identical user programs
  - Bumpless switchover
- Changes to the configuration during operation

SIMATIC PCS 7 AS RTX Microbox system

- Compact and rugged system for use at plant level
- Resistant to vibration and shock since there are no fans or rotating storage media
- Maintenance-free 24/7 operation at ambient temperatures up to 55 °C

SIMATIC PCS 7 AS mEC RTX modular embedded system

- Compact system in S7-300 format for small applications and package units
- Centrally expandable thanks to the direct addition of up to 8 S7-300 I/O modules
- Distributed ET 200M remote I/O stations can be connected via PROFINET IO

© Siemens AG 2013

Compact systems

SIMATIC PCS 7 BOX – complete control system in compact design

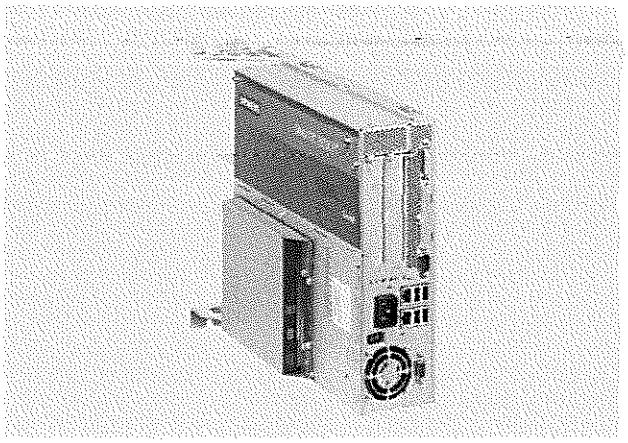

SIMATIC PCS 7 BOX RTX compact system with portrait assembly kit

SIMATIC PCS 7 BOX enhances the SIMATIC PCS 7 range with low-price, rugged and space-saving industrial PC systems with versatile application options, e.g. as:

- Client in an operator system or in SIMATIC BATCH
- Compact process control system with system functionality for engineering (ES), automation (AS), HMI (OS)
- Runtime system with system functionality as above, but without engineering

SIMATIC PCS 7 BOX systems are compact systems and are focused to the last two applications listed above.

With the SIMATIC PCS 7 OS Runtime software limited to 2 000 process objects (POs), excellent physical properties, and small dimensions, they are designed for automation at plant level for:

- Small applications/units in production processes
- Package units (enclosed subprocesses)
- Laboratories or institutes

They are also highly suitable as training systems for operators and service engineers.

The application of standard SIMATIC PCS 7 components ensures scalability and unlimited expansion without a change in compatibility. With increasing requirements, e.g. if a test system is subsequently to be operated as a productive system of larger scale, expansion with SIMATIC PCS 7 system components is possible without problem, as is integration into the production plant.

The product range is differentiated primarily via the automation functionality, that is, via the controller type:

- **SIMATIC PCS 7 BOX RTX**
  with integrated WinAC RTX software controller
- **SIMATIC PCS 7 BOX**
  in combination with a separate external controller:
  - PCS 7 AS RTX Microbox automation system
  - PCS 7 mEC RTX automation system
  - Modular automation system of the S7-400 series as single or redundancy station

The selection depends on the price/performance ratio and on the supported hardware and software functionalities.

The two basic types can be differentiated further depending on whether the engineering is concentrated in a central engineering system or integrated in the compact system:

- SIMATIC PCS 7 BOX RTX
  - ES/OS system with ES + OS + AS functionality
  - OS Runtime system with OS + AS functionality
- SIMATIC PCS 7 BOX
  - ES/OS system with ES + OS functionality
  - OS Runtime system with OS functionality

A complete process control system for small applications can be implemented by expanding with distributed process I/Os. Depending on the type of automation system, the distributed process I/O can be connected via PROFIBUS, FOUNDATION Fieldbus H1 or PROFINET IO. Depending on the type of field communication, the ET 200M, ET 200iSP, ET 200S and ET 200pro remote I/O stations are supported by a comprehensive range of low-cost signal/function modules, but also by field/process devices connected directly over the fieldbus. S7-300 I/O modules can also be directly attached to the mounting rail of the PCS 7 AS mEC RTX.

The compact systems can be incorporated into the PCS 7 asset management using the integrated SIMATIC PC DiagMonitor diagnostic software. Equipped as an ES/OS system with additional software licenses for SIMATIC PDM and SIMATIC PCS 7 Maintenance Station, a compact system can also be operated as a maintenance station.

SIMATIC PCS 7 BOX systems with an external controller are also suitable for SIMATIC BATCH (up to 10 units) or as a Web server for up to two Web clients.

© Siemens AG 2013

System configuration	PCS 7 BOX RTX	PCS 7 BOX			
	Integrated WinAC RTX Controller	PCS 7 AS RTX (Microbox) as separate controller	PCS 7 AS mEC RTX as separate controller	Modular AS 41x (AS Single Station) as separate controller	Modular AS 41xH or AS 41xF (AS Single Station or AS Redundancy Station) as separate controller
Supported functions and limits					
Software					
AS/OS Engineering	●	●	●	●	●
OS Runtime Single Station up to 2 000 OS runtime POs	●	●	●	●	●
PCS 7 APL	●	●	●	●	●
SIMATIC PDM PCS 7	●	●		●	●
SIMATIC PCS 7 Maintenance Station	●	●		●	●
SIMATIC BATCH up to 10 units		●	●	●	●
Web server, for up to 2 Web Clients		●	●	●	●
OS Single Station Redundancy		●	●	●	●
S7 F Systems					●
SIMATIC Safety Matrix					●
Hardware					
Controller (AS) independent of BOX PC system		●	●	●	●
AS-AS Communication	●	●	●	●	●
Routing	● [1]	● [1]		●	●
PROFIBUS DP/PA	●	●		●	●
FOUNDATION Fieldbus (FF)				●	●
PROFINET IO with ET 200M			●	●	●
Configuration in Run (CiR)				●	●
High-Precision Time Stamping				●	●
S7 Block Privacy				●	●
Retentive AS Data	only with UPS	only with UPS	only with UPS		
AS Configuration Limits[2]	WinAC RTX 2010 up to 1 200 AS runtime POs	WinAC RTX 2010 up to 1 200 AS runtime POs	WinAC RTX 2010 up to 1 200 AS runtime POs	Depending on the AS 41x type, up to 1 800 AS runtime POs	Depending on the AS 41xH or AS 41xF type, up to 2 000 AS runtime POs

G_PCS7_XX_00281

[1] The routing functionality of WinAC RTX 2010 can only be used with the onboard CP 5611 of the SIMATIC IPC627C (PCS 7 BOX RTX) and IPC427C (PCS 7 AS RTX).
[2] Typical mixed configuration limits, based on the SIMATIC PCS 7 Advanced Process Library (APL)

Design versions

The compact systems are operated and monitored as standard using separate control units (mouse, keyboard, process Monitor).

An alternative design version with panel (photo on right) also permits operation and monitoring using a 19" TFT Touch Panel with a resolution of 1280 x 1024 pixels.

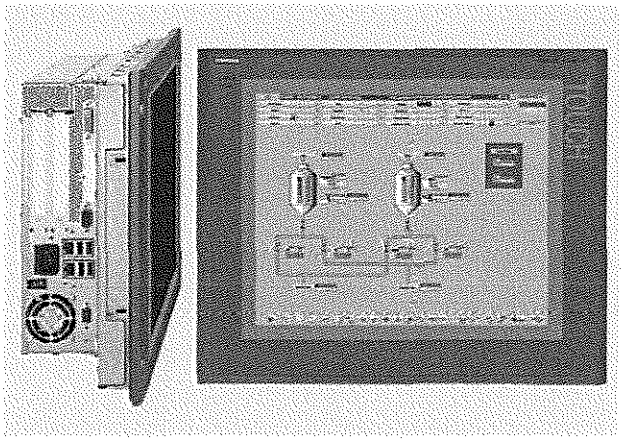

SIMATIC PCS 7 BOX with Panel Front, side and front views

© Siemens AG 2013

Communication

Fast and reliable communication with Industrial Ethernet for plant bus and terminal bus

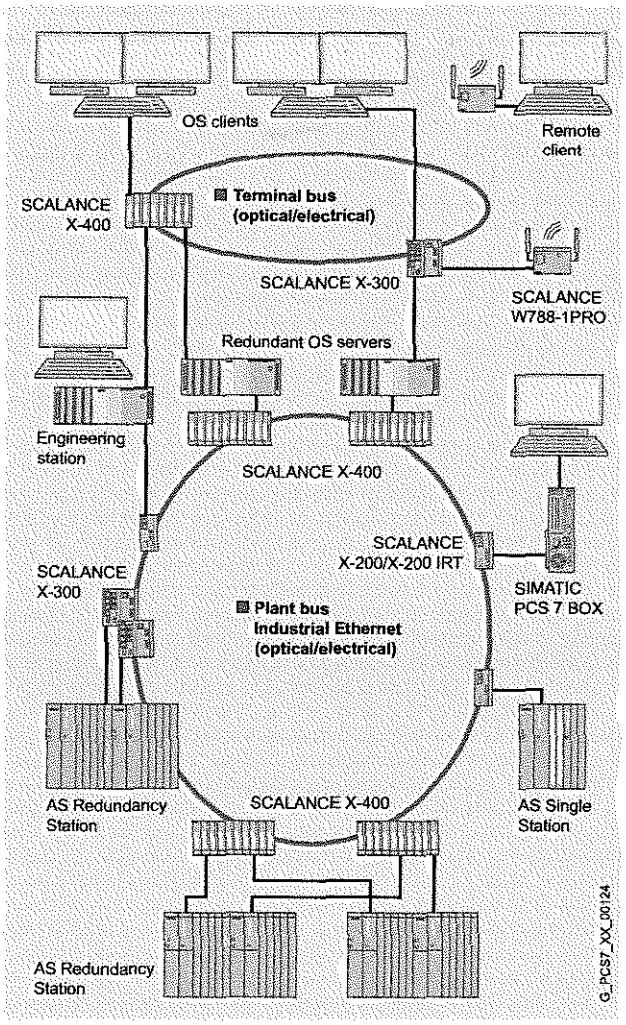

Industrial Ethernet, connection examples

Technical specifications for Industrial Ethernet	
Plant bus/terminal bus	Industrial Ethernet
Number of nodes	1 023 per network segment (IEEE 802.3 standard)
Number of switches	up to 50
Length of the network	
- Local network	Electrical up to approx. 5 km Optical up to approx. 150 km
- WAN	Worldwide with TCP/IP
Topology	Linear, tree, ring, star

SIMATIC NET

Through application of SIMATIC NET network components based on globally established standards, SIMATIC PCS 7 is provided with a powerful and rugged range of products for implementing integrated communications networks for reliable data exchange between the system components in different levels of a plant.

The SIMATIC NET products specially developed for industrial applications provide optimum suitability for plants in all sectors. They are matched to one another and meet the highest standards, especially in areas where they are subject to extreme influences, such as:

- Electromagnetic interference fields
- Corrosive liquids and atmospheres
- Explosion hazards
- High mechanical loads

The SIMATIC NET products ensure expandability and the protection of investments due to compatible further developments, as well as integration from inbound logistics to outbound logistics and from field devices up to the management information system.

Industrial Ethernet

The plant bus and the terminal bus for multiple station systems with client/server architecture are implemented with Industrial Ethernet, a powerful area and cell network for industrial applications in line with the international IEEE 802.3 standard (Ethernet).

In the various SIMATIC PCS 7 subsystems (ES, OS, AS, etc.), onboard interface modules, simple network cards or special communication modules (CP 1613 A2, CP 1623, CP 1628) are used as communication interfaces. For small systems, the "Basic Communication Ethernet" integrated in the PCS 7 Industrial Workstations permits economical operation of single stations and servers on the plant bus with simple network cards.

In medium and large plants characterized by high requirements, SIMATIC PCS 7 relies on powerful CP 1613 A2/ CP 1623/CP 1628 communication modules as well as modern Gigabit and FastEthernet technology which combines the high security provided by optical rings with the scalable performance provided by switching technology and high transmission rates up to 1 Gbit/s.

© Siemens AG 2013

Industrial Ethernet Switches / Industrial Wireless LAN

Industrial Ethernet switches

Industrial Ethernet switches are used for integration of communication participants in the plant bus. These switches from the SCALANCE X family are particularly suitable for this and offer scalable performance at an attractive price while supporting versatile configuration possibilities.

A multi-faceted range of products from the SCALANCE X product lines SCALANCE X-100, X-200, X-300 and X-400 is authorized for SIMATIC PCS 7. The number of ports, and levels of modularity, flexibility and functionality increase with ascending type number. While the switches of the SCALANCE X-100 and X-200 product lines are only equipped with Fast Ethernet ports for data rates up to 100 Mbit/s, switches from the SCALANCE X-300 and X-400 product lines are mainly equipped with Gigabit Ethernet ports. The designs vary even within one product line: Compact and flat design on X-200/ X-200 IRT, as well as compact and rack design on X-300.

Ring topologies are preferred for the plant bus and terminal bus thanks to their high availability. An additional benefit of optical rings is their electromagnetic compatibility.

Redundant ring topology
If availability requirements are particularly high, it is possible to distribute the communication on two physically separated redundant rings. One switch in each case takes over the function of the redundancy manager for each ring. The current SCALANCE X-400, X-300, X-200 IRT und X-200 switches (except X208PRO) are suitable for this.

- **Terminal bus:**
  The PCS 7 stations are connected via a separate Industrial Ethernet interface to each of the two rings. On the PCS 7 stations, the SIMATIC NET SOFTNET IE RNA communication software organizes the communication processes by means of the Parallel Redundancy Protocol (PRP) in accordance with IEC 62439-3. Terminal equipment with only one Industrial Ethernet connection, e.g. the SICLOCK TC 400 central plant clock, can be integrated via SCALANCE X204RNA.

- **Plant bus:**
  The link partners connected to the two rings by means of two CPs per AS CPU and OS server are linked together logically when configuring with NetPro by using a fault-tolerant S7 connection (4-way redundancy).

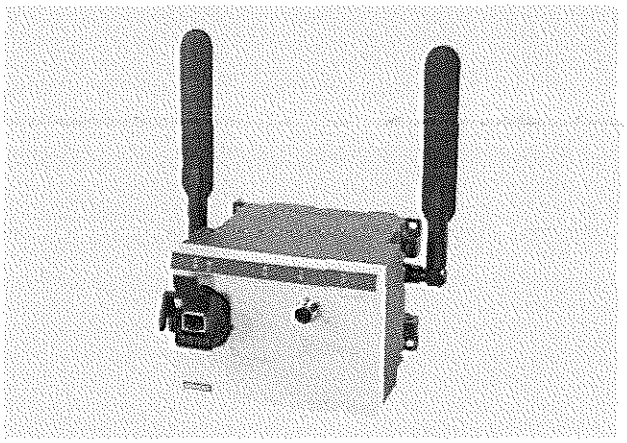

SCALANCE W740 Ethernet client module for indoor use

Industrial Wireless LAN (IWLAN)

SIMATIC PCS 7 offers the option of integrating mobile or stationary remote clients into the terminal bus. Industrial Wireless LAN (IWLAN) access points are used for this:

- SCALANCE W784 (in the control cabinet)
- W786 (outdoors) or
- W788 (indoors)

Mobile remote clients (e.g. notebooks) can communicate with the IWLAN access point using a WLAN interface module, and stationary remote clients in a desktop/tower housing (PCS 7 Industrial Workstations) can communicate using a SCALANCE W740 IWLAN client module.

The following applications can then be implemented:

- Use of additional remote OS clients (1 or 2 on IWLAN)
- Linking of web clients to a PCS 7 Web Server (up to 2 on IWLAN)
- Remote access to an engineering station using the "RealVNC" software (Enterprise Edition), e.g. during commissioning.

All components used are very rugged, apply state-of-the-art authentication and encryption procedures, and guarantee high reliability of the radio channel.

© Siemens AG 2013

PROFINET – The Industrial Ethernet standard for automation

PROFINET is based on the international standards IEC 61158 and IEC 61784 and combines the advantages of the open network standard, Ethernet, and the PROFIBUS fieldbus system. PROFINET stands for maximum transparency, open IT communication, network security, and real-time communication down to the field level. Together with the PROFIsafe profile it supports safety-related communication between automation system (controller) and process I/O. This makes PROFINET the ideal basis for a uniform automation network in the plant, into which existing field buses implemented with PROFIBUS can be easily integrated.

In the context of the SIMATIC PCS 7 process control system, the application of PROFINET mainly focuses on PROFINET IO, the field communication between the automation systems (controllers) and the process I/O.

The S7-400 automation systems can be integrated into PROFINET IO via the PROFINET interface in the CPU or via a CP 443-1 communication module, the SIMATIC PCS 7 AS mEC RTX via the PROFINET interface in the EC31 embedded controller, and the ET 200M remote I/O stations via an IM153-4PN High Feature interface module. Different Industrial Ethernet products such as SCALANCE X switches and media converters, FastConnect connection elements, electrical and optical transmission media can be used as network components.

The PROFIBUS fieldbus or the FOUNDATION Fieldbus H1 can be integrated via a CP 443-5 communication module or a PROFIBUS DP interface in the CPU of the automation system, and the PROFIBUS in addition via IE/PB Link PN IO.

A wide variety of network configurations can be implemented in the field, based on line, star, tree, and ring topologies. PROFINET IO configurations with ring topology guarantee a higher availability of the I/O devices than other topologies.

In the case of PROFINET IO ring topologies with AS single stations, the media redundancy of the ring prevents failure of the complete segment. If there is an interruption in the ring or if one of the stations fails, the redundancy manager immediately activates the alternative communication path. It is insignificant here whether networking is carried out via SCALANCE X switches or direct via the PROFINET interfaces of the automation system and remote I/O station.

The maximum availability with minimum error handling times is achieved by AS Redundancy Stations in conjunction with the system redundancy of the I/O devices. System redundancy refers to a type of PROFINET IO communication where each I/O device establishes a communication connection to the two CPUs of an AS Redundancy Station over the topological network. In contrast to the single-sided I/O device connection to only one CPU, failure of a CPU in this case does not automatically lead to failure of the I/O devices.

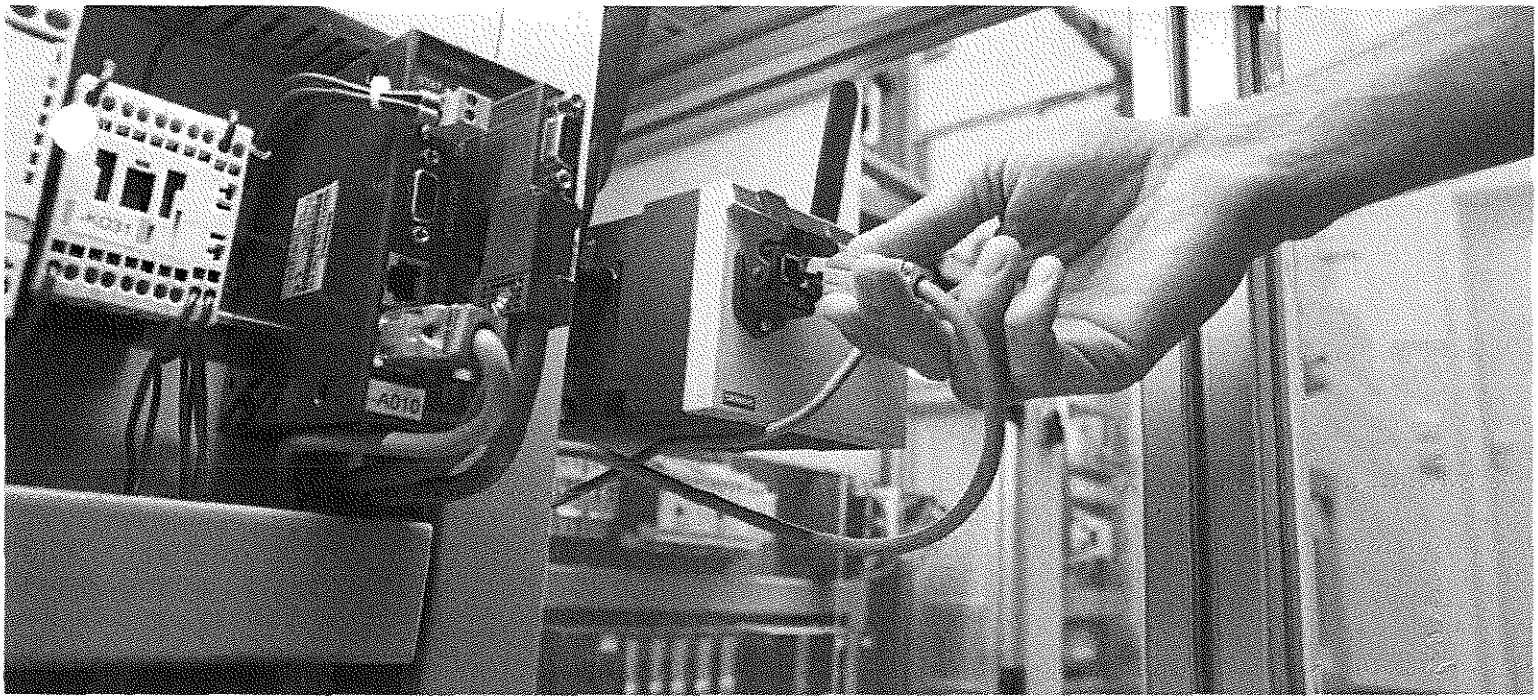

© Siemens AG 2013

Typical PROFINET IO configurations with AS single station

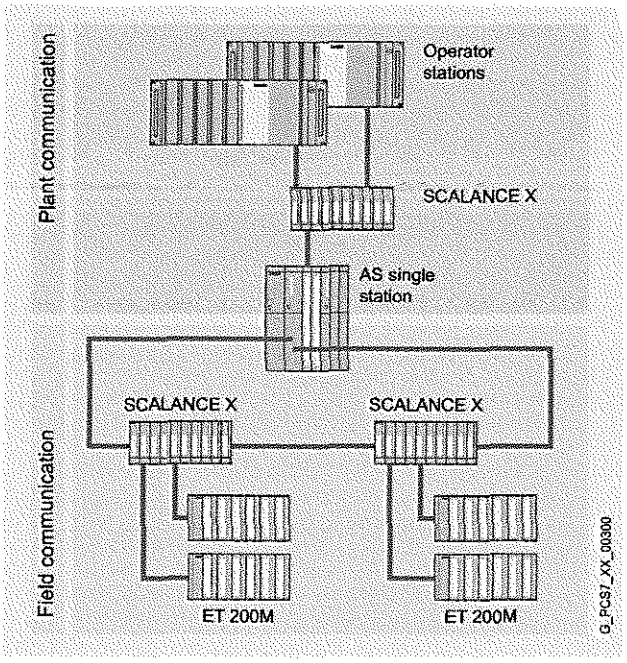

Networking the PROFINET stations via SCALANCE X switches

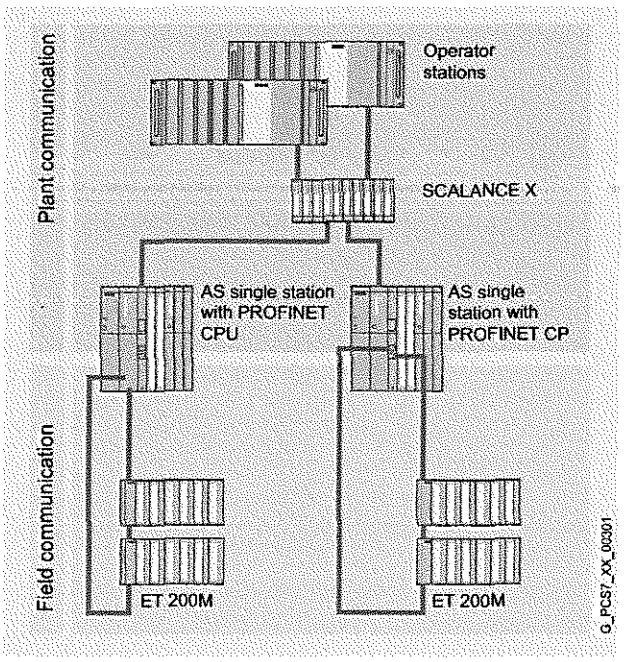

Direct networking of the PROFINET stations via integrated interfaces

Typical PROFINET IO configurations with AS redundancy station

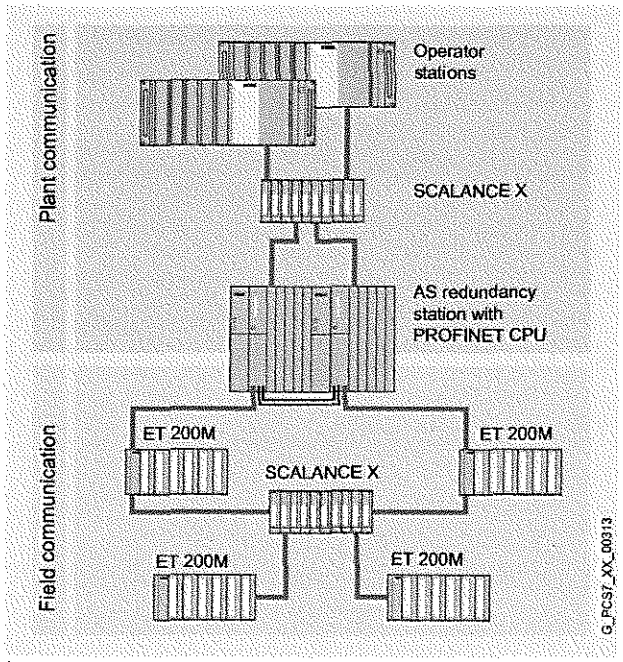

PROFINET ring configuration with AS redundancy station

© Siemens AG 2013

Fast and rugged fieldbus communication

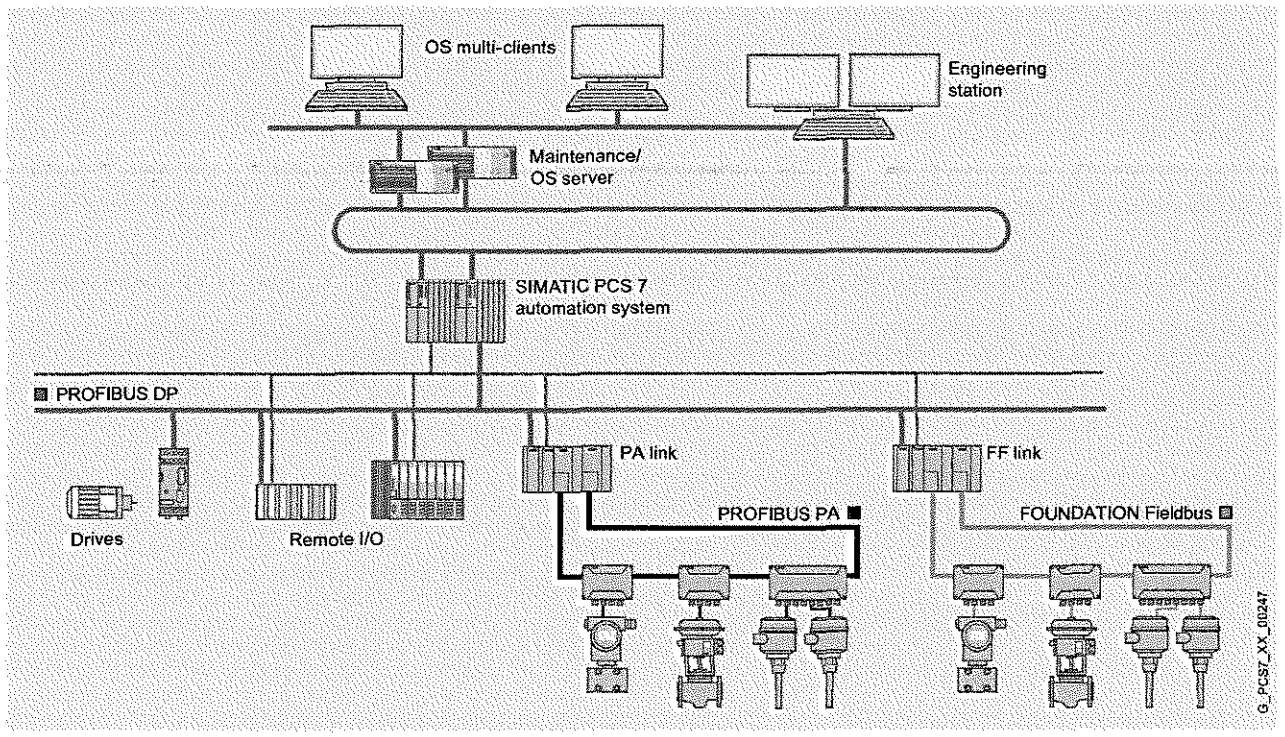

System integration of PROFIBUS PA and FOUNDATION Fieldbus H1 via PROFIBUS DP

Distributed peripherals such as remote I/O stations with their I/O modules, transmitters, drives, valves or operator terminals communicate with the automation systems at field level through a powerful real-time bus system. This field communication is characterized by:

- Cyclic transmission of process data
- Acyclic transfer of alarms, parameters and diagnostics data

The universal PROFIBUS has proven itself as a rugged and reliable communication medium at field level. Based on the IEC 61158 and IEC 61784 standards, it can cover all requirements of the production and process industries, with:

- Complementary transmission technologies
- Uniform communication profile
- Additive application profiles for typical device functions, e.g. PA Devices, PROFIdrive, PROFIsafe or PROFIenergy.

PROFIBUS DP

PROFIBUS DP is designed to provide high data transmission rates and short response times (up to 1 ms) and is at the same time:

- Communication medium for data transmission between automation systems (controllers) and distributed I/O devices of the ET 200 series (remote I/Os), as well as field/process devices, drives, analyzers, CPUs/CPs, operator panels etc. that have a PROFIBUS DP interface.
- Integrator for the PROFIBUS PA fieldbus and FOUNDATION Fieldbus H1 which are typical in the process industry

Since PROFIBUS DP supports the HART protocol, it is also possible to integrate HART field devices into the PROFIBUS DP communication via HART remote I/Os.

The PROFIBUS DP is available for electrical or optical transmission:

- RS 485
  Simple and low-cost electrical transmission technology based on shielded two-wire cable
- Fiber-optic
  Optical transmission system with glass or plastic fiber-optic cables, for fast transmission of large quantities of data in environments with high interferences or for covering long distances

With the aid of the fieldbus isolating transformer (RS 485-iS coupler) and the RS 485-iS electrical transmission technology, PROFIBUS DP can also be run as an intrinsically-safe fieldbus in all environments up to hazardous zone 1 or 21.

© Siemens AG 2013

PROFIBUS PA and FOUNDATION Fieldbus H1

The direct connection of transmitters and actuators including power supply via the communication medium, as well as detailed diagnostics, are particularly relevant to the automation of industrial processes that frequently take place in corrosive, harmful, and hazardous environments.

Both the PROFIBUS PA fieldbus and the FOUNDATION Fieldbus H1 (FF H1) meet these requirements. Both fieldbuses are optimally suitable for directing integrating actuators and sensors in operating environments up to hazardous zone 1/21 or 0 into the process system. The intrinsically-safe transmission technology MBP (Manchester Coded; Bus Powered) provides the power supply to the field devices as well as digital data transmission with a constant transfer rate of 31.25 kbit/s over a two-wire cable.

The physical bus systems of PROFIBUS PA and FF H1 are largely identical in accordance with IEC 61158. Both can be integrated seamlessly in the SIMATIC PCS 7 process control system using PROFIBUS DP as link. PROFIBUS PA and FOUNDATION Fieldbus H1 thus profit equally from the higher-level PROFIBUS DP architecture. SIMATIC PCS 7 customers are therefore not limited to a specific fieldbus but can select this freely matching the optimum field instrumentation.

Technical data	PROFIBUS DP		
Data transmission	**RS 485**	**RS 485-iS**	**Fiber-optic**
Transfer rate	9.6 kbit/s... 12 Mbit/s	9.6 kbit/s... 1.5 Mbit/s	9.6 kbit/s... 12 Mbit/s
Cable	Two-wire shielded	Two-wire shielded	Plastic as well as multi-mode and single-mode glass-fiber
Type of protection		EEx(ib)	
Topology	Line, tree	Line	Ring, star, linear
Nodes per segment	32	32 [1]	–
Nodes per network (with repeater)	126	126	126
Cable length per segment depending on transfer rate	1 200 m at max. 93.75 kbit/s 1 000 m at 187.5 kbit/s 400 m at 500 kbit/s 200 m at 1.5 Mbit/s 100 m at 12 Mbit/s	1 000 m at 187.5 kbit/s [1] 400 m at 500 kbit/s [1] 200 m at 1.5 Mbit/s [1]	Max. 80 m (plastic) 2 ... 3 km (multimode glass-fiber) >15 km at 12 Mbit/s (single-mode glass-fiber)
Repeater for signal boosting with RS 485 networks	Max. 9	Max. 9 [1]	Not relevant

[1] Conforming to PROFIBUS installation guideline 2.262

Technical data	PROFIBUS PA	FOUNDATION Fieldbus H1
Data transmission	**MBP**	**MBP**
Transfer rate	31.25 kbit/s	31.25 kbit/s
Cable	Two-wire shielded	Two-wire shielded
Type of protection	EEx (ia/ib)	EEx (ia/ib)
Topology	Linear, tree, ring	Linear, tree, ring
Safety Integrated	●	–
Control in the field	–	●
Interoperability	●	●
Field devices per segment/coupler	31	31
Field devices per link	64	31
Active field distributor per segment/coupler - AFD4/AFD8 - AFDiS or combination of AFDiS with AFD4/AFD8	 8 5	 8 5
Max. total current consumption of all field devices	1 A	1 A
Cable length per segment depending on transfer rate	1 900 m: standard 1 900 m: EEx (ib) 1 000 m: EEx (ia)	1 900 m

© Siemens AG 2013

Fieldbus architectures

With the displayed fieldbus architectures, the network transition from PROFIBUS PA or FF H1 to PROFIBUS DP is via a link (PA link/FF link) which is equipped with 1 or 2 couplers.

A maximum of 5 bus segments can be operated via individual couplers on a PA link which can be equipped with up to 5 couplers (max. 3 for mixed configurations with ring or with coupler redundancy). Only 1 segment can be operated on the FF link which can be equipped with 2 couplers, independent of the configuration.

Due to the identical physical bus systems, the same active field distributors can be used for PROFIBUS PA and FF H1: AFS (active field splitter), AFD (active field distributor) for Ex-Zone 2/22 and AFDiS (active field distributor intrinsically safe) for Ex-Zone 1/21 and 2/22.

Linear architectures with single couplers
Active field distributors (up to 8 without AFDiS, up to 5 with) integrate the field devices in a line segment. Connection to these field distributors is made via short-circuit-proof spur lines. In contrast to AFD4/8, the spur line lengths with AFDiS are independent of the total number of spur lines in the segment and need not be taken into account for the total length of the segment. The line segment can be connected to a single or redundant PROFIBUS DP via a link. The last AFD4/AFD8/AFDiS at the end of the line leading away from the link automatically activates its bus terminating resistor.

Linear architectures with redundant couplers
The active field splitter AFS is connected with a redundant coupler pair (2 x FDC 157) in the link. It interconnects a line segment with the respective active coupler. A coupler can be replaced during operation. The field devices are integrated in the line segment as described in the section "Line architecture with single coupler".

Ring architecture with coupler and media redundancy
Maximum availability can be achieved with a ring segment that is created by means of a redundant coupler pair (2 x FDC 157) in the link. Active field distributors AFD4/AFD8/AFDiS (up to 8 without AFDiS, up to 5 with) integrate the field devices in this ring segment via short-circuit-proof spur lines. The bus is terminated automatically and is immediately adapted in the event of changes or faults on the bus. An extension on the fieldbus or replacement of a coupler during operation is possible.

Advantages of the ring architecture

- Maximum availability avoids unplanned plant downtimes
- Simple and safe installation
- Automatic termination
- Automatic, bumpless isolation of faulty subsegments
- Topology can be repaired or expanded during ongoing operation

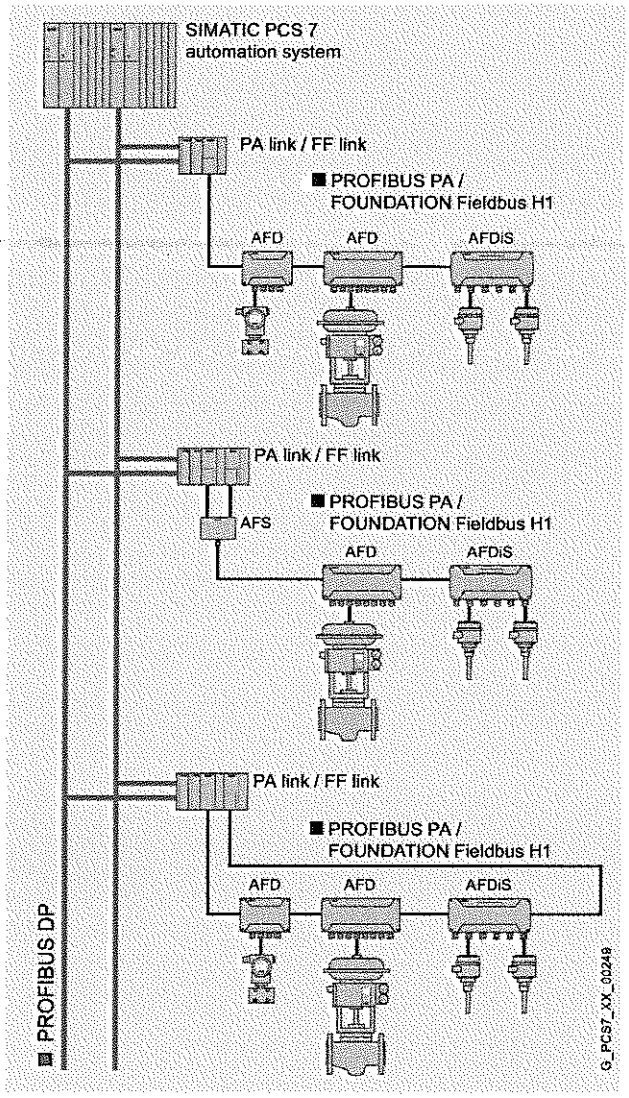

Fieldbus architectures with PROFIBUS PA and FOUNDATION Fieldbus H1

Max. spur line length

Number of spur lines per bus segment (1 device per spur line)		AFD Non-intrinsically-safe devices	AFDiS	AFDiS Intrinsically-safe devices in accordance with FISCO
1 through 31	1 ... 12	120 m	120 m	60 m
	13 ... 14	90 m		
	15 ... 18	60 m		
	19 ... 24	30 m		
	25 ... 31	1 m		

© Siemens AG 2013

Process I/O

The right solution for every requirement

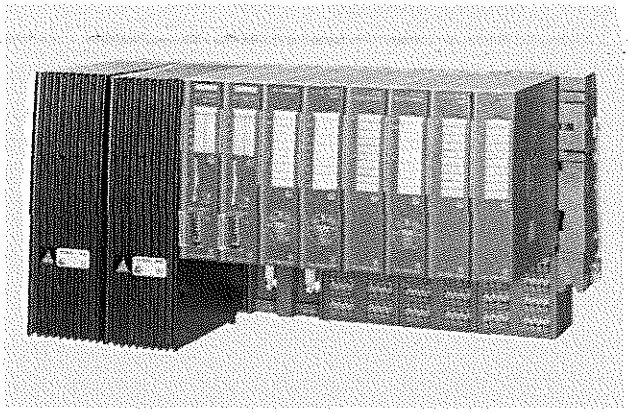

ET 200iSP with redundant power supply

SIMATIC PCS 7 offers a variety of options for detecting and outputting process signals via sensors and actuators as well as for connecting process I/O to the automation systems:

- ET 200 remote I/O stations with an extensive range of cost-effective signal and function modules on PROFIBUS DP
- ET 200M remote I/O stations on PROFINET
- Intelligent, distributed field/process devices and operator terminals direct on PROFIBUS DP, PROFIBUS PA or FOUNDATION Fieldbus H1, also redundant or in hazardous areas of Zones 0, 1, 2 or 20, 21, 22
- Analog and digital I/O modules of the SIMATIC S7-400 operated centrally in the automation system

In practice, automation in the field area is largely characterized by distributed process I/Os:

- ET 200 remote I/Os in conjunction with classic field/process devices and HART field devices
- Intelligent field/process devices for direct fieldbus connection

In addition to the wide technical bandwidth, the following properties characterize the distributed process I/Os:

- Modularity and uniformity
- Flexible adaptability to the plant structure
- Minimum cabling and engineering requirements
- Low commissioning, servicing and lifecycle costs

S7-400 signal modules that can be operated centrally in the automation system are an alternative to distributed I/Os for small applications or plants with limited distributed expansion.

Modifications possible online	
ET 200M/ ET 200iSP	■ Adding of ET 200M/ET 200iSP stations ■ Adding of I/O modules to the station ■ Changing the parameter settings of I/O modules ■ Parameterization of connected HART field devices with SIMATIC PDM
ET 200S	■ Adding of ET 200S stations
ET 200pro	■ Adding of ET 200pro stations
PROFIBUS DP, PROFIBUS PA, FOUNDATION Fieldbus H1	■ Adding of PROFIBUS DP stations ■ Adding of PA links and PA field devices ■ Parameter assignment of PA or FF field devices with SIMATIC PDM

Standard process I/Os for SIMATIC PCS 7

The following standard process I/Os are recommended for the SIMATIC PCS 7 process control system for automation in the field area:

- ET 200M distributed I/O system
- ET 200iSP distributed I/O system
- ET 200S distributed I/O system
- ET 200pro distributed I/O system
- PROFIBUS PA devices with PA profile 3.0 or later

Further process I/O can be integrated into SIMATIC PCS 7 with standard blocks from the Advanced Process Library or special add-on blocks. Examples of this are devices of drive and weighing systems such as:

- SIMOCODE pro motor management system
- SINAMICS G120 frequency inverter
- SIWAREX U/FTA/FTC weighing systems

MTA terminal modules

Field devices, sensors and actuators can be connected simply, rapidly and reliably to I/O modules of the ET 200M remote I/O stations using MTA terminal modules (Marshalled Termination Assemblies). MTA versions are available for standard I/O modules as well as for redundant and safety-related I/O modules. The use of the MTA achieves a significant reduction in costs for cabling and commissioning and avoids wiring errors.

© Siemens AG 2013

Use of the process I/Os for SIMATIC PCS 7

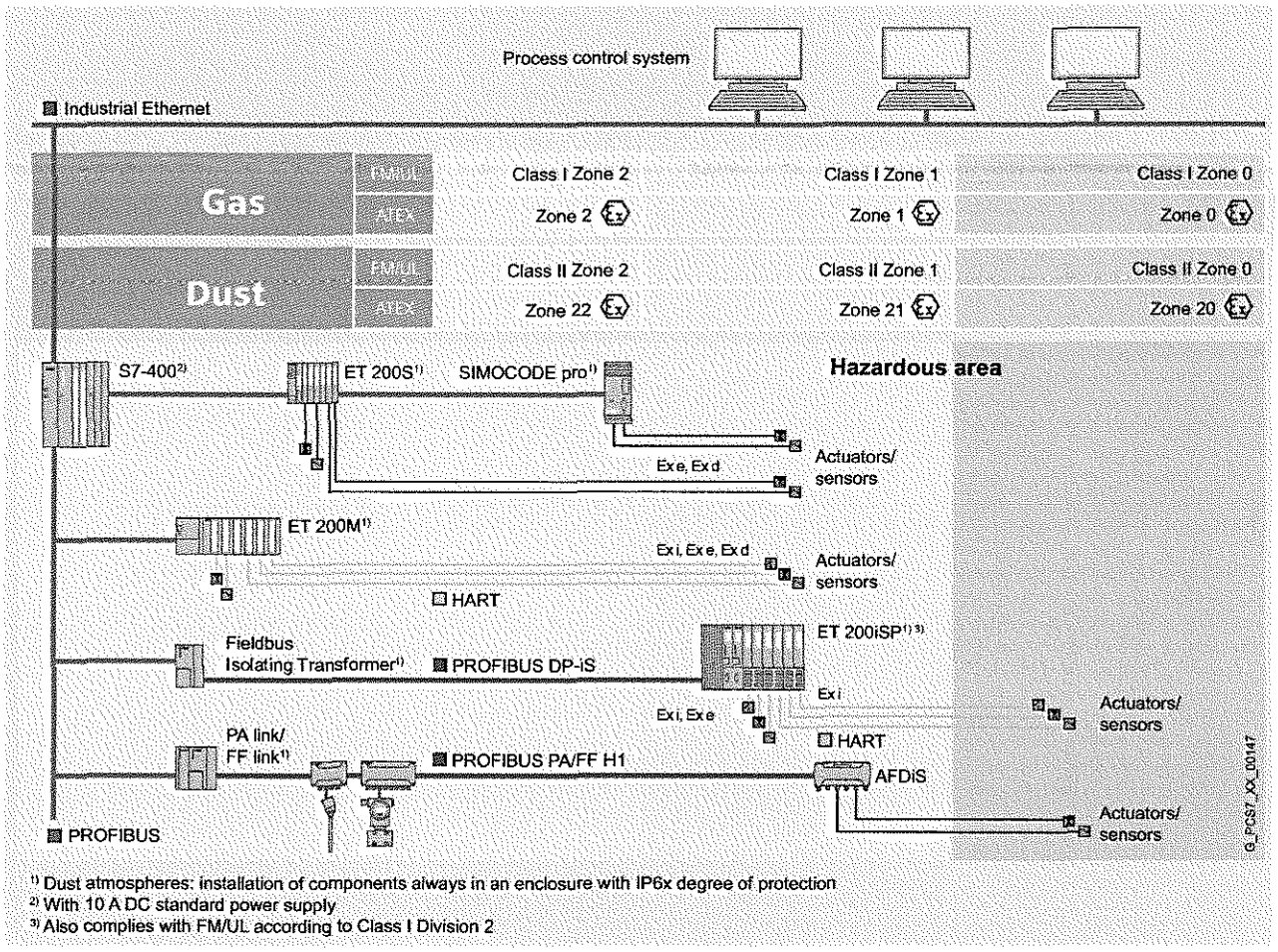

¹) Dust atmospheres: installation of components always in an enclosure with IP6x degree of protection
²) With 10 A DC standard power supply
³) Also complies with FM/UL according to Class I Division 2

ET 200 in potentially explosive gas and dust atmospheres

The graphic above shows the possibilities for connecting distributed SIMATIC PCS 7 process I/Os with consideration of different environmental conditions.

Sensors/actuators, analyzers as well as weighing and dosing systems

Siemens Sensors and Communication offers a comprehensive range of devices for operation with the SIMATIC PCS 7 process control system. These include, for example:

- Devices for measurement of pressure, flow, temperature or level
- Positioners
- Gas analyzers
- SIWAREX weighing systems

These devices are available in versions with PROFIBUS DP/PA interface and for HART communication. The majority of devices is already included in the device library of the SIMATIC PDM process device manager.

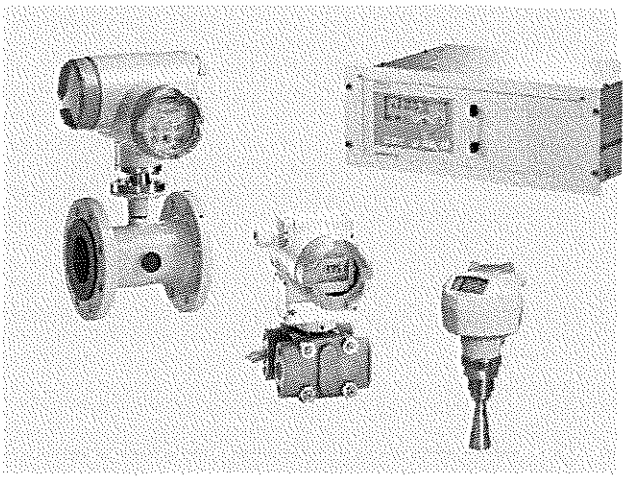

Range of devices from Siemens Sensors and Communication

Overview of the current range of devices with additional information, technical specifications and ordering data:
www.siemens.com/processinstrumentation

© Siemens AG 2013

Distributed I/O systems
Recommended devices for field automation

I/O system	ET 200M	ET 200iSP	ET 200S	ET 200pro
				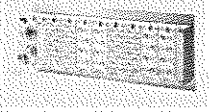
General				
Degree of protection	IP20	IP30	IP20	IP65/IP66/IP67
Design	Modular	Modular	Bit modular, expandable block	Modular
Mounting	Mounting rail	Mounting rail	Standard sectional rail	Mounting rail
Connection system for sensors/actuators	Single-wire connection Cage-clamp/screw-type connection, FastConnect, TopConnect	Multi-wire connection Cage-clamp/screw-type connection	Multi-wire connection Cage-clamp/screw-type connection, FastConnect	M8, M12, M23
Field technology				
Safety	●	●	●	●
For use in hazardous areas	Zones 2, 22	Zones 1, 21	Zones 2, 22	–
Increased availability	Switched, redundant	Switched, redundant	–	–
Temperature range	0 ... +60 °C [1]	-20 ... +70 °C	0 ... +60 °C [1]	-25 ... +55 °C
Vibration resistance (continuous)	1 *g*	1 *g*	2 *g*	5 *g* (module-dependent)
Communication				
PROFIBUS (copper/fiber-optic)	● / – (12 Mbit/s)	● / – (1.5 Mbit/s)	● / ● (12 Mbit/s)	● / ● (12 Mbit/s)
Systemintelligenz				
Permanent wiring	● (plugging and removal)	●	●	–
Hot swapping	● (with active backplane bus)	●	●	●
Expansion/configuration during ongoing operation	● / ●	● / ●	● / –	– / –
Diagnostics (module-dependent)	Channel-discrete	Channel-discrete	Channel-discrete	Channel-discrete
Functions				
Digital channels	●	●	●	●
Analog channels	●	●	●	●
incl. HART	●	●	–	–
Motor starter	–	–	●	–
Pneumatic interface	–	●	–	–
Technological functions	Counting/measuring, controlling, weighing	Counting, frequency measuring	Counting/measuring	–

[1] Also available as SIPLUS component for expanded temperature range -25 ... +60/70 °C and corrosive atmosphere/condensation (exact details at www.siemens.com/siplus)

© Siemens AG 2013

Drives
Recommended devices

Drives	SIMOCODE pro	SINAMICS G120
	Motor management system for constant-speed motors in the low-voltage range	**Frequency converter for three-phase asynchronous and synchronous motors**
Degree of protection	IP20 (module-dependent)	IP20
Design	Modular	Modular (control unit, power unit)
Performance range	0.1 ... 700 kW	0.37 ... 250 kW
Voltages	Up to 690 V AC	380 ... 480 V or 660 ... 690 V AC ± 10 %
Rated motor currents	Up to 820 A	–
PROFIBUS communications	●	●
Block library for integration in SIMATIC PCS 7	●	●
Application	Protection and control of motors - In hazardous areas for types of protection EEx e/d corresponding to ATEX directive 94/9/EC - With heavy-duty starting (paper, cement, metal and water industries) - In high-availability plants (chemical, oil, raw material processing industry, power plants)	For universal use in all industrial and trade sectors

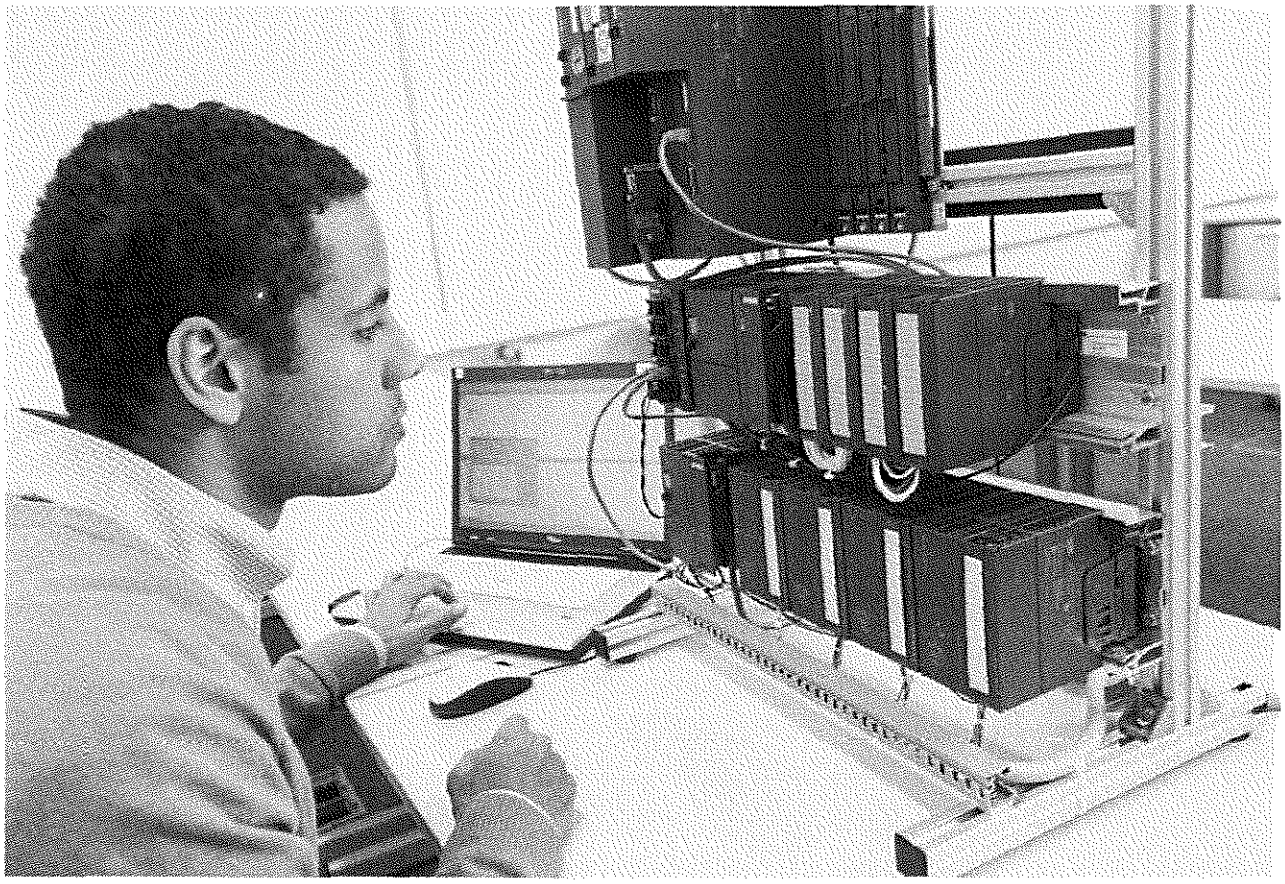

© Siemens AG 2013

Batch automation with SIMATIC BATCH

Modular, flexible, scalable and fully integrated in SIMATIC PCS 7

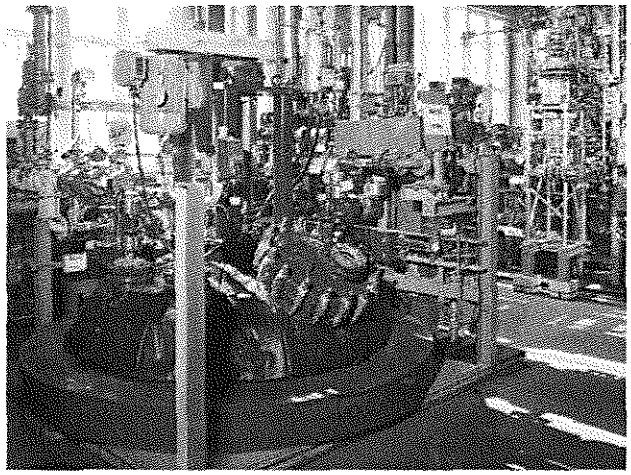

SIMATIC BATCH's recipe-driven control strategies enable efficient and flexible execution of simple and complex batch processes with changing control sequences. SIMATIC BATCH meets all the associated high requirements without exception:

- Optimum capacity utilization of production plants
- Uniform product quality
- Traceability
- Compliance with statutory standards and directives
- Fast response to changing market conditions

Modular architecture

SIMATIC BATCH is configured as a single station system or as a client/server system and can be used in plants of any size due to its modular architecture and scalability in cumulative SIMATIC BATCH UNITs (sets of 1, 10 and 50 plant unit instances).

With small batch applications, a SIMATIC PCS 7 BOX can be combined with a separate controller, e.g. a SIMATIC PCS 7 AS RTX or SIMATIC PCS 7 AS mEC RTX.

However, characteristic for the automation of batch processes using SIMATIC BATCH are client/server architectures with which one batch server and several Batch Clients process a plant project together. The batch server can also be configured with redundancy in order to increase availability.

In addition to the SIMATIC PCS 7 Industrial Workstations, the more compact SIMATIC PCS 7 OS clients 627C and 427D are also suitable for use as batch clients.

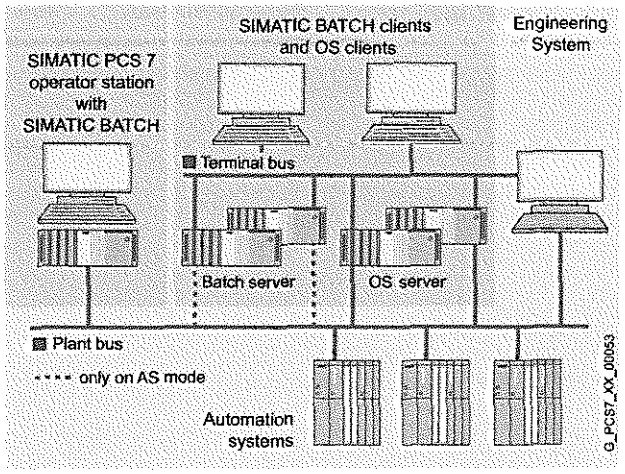

SIMATIC BATCH, scalable from single-user up to client/server system

Integration in SIMATIC PCS 7

SIMATIC BATCH is completely integrated in SIMATIC PCS 7. Connection to the production control level is supported by direct communication with SIMATIC IT or by an open interface to any manufacturing execution system (MES).

The plant data can be configured entirely using the Engineering System. This passes on all data required for recipe creation to the batch server, making recipe processing possible separate from the Engineering System. Changes to the configuration which are made on the Engineering System are available to the batch server using an update function.

The SIMATIC BATCH server software usually runs on an autonomous server hardware (batch server), separate from the OS servers. Depending on the capacity utilization of the operator system, OS and batch server software can also be operated on shared server hardware (OS/batch server). SIMATIC BATCH clients and OS clients can run on separate or common basic hardware.

SIMATIC BATCH uses SIMATIC Logon integrated in the process control system for central user administration and authentication, as well as for the "electronic signature" to release master recipes, formulas, and library objects through enabled Windows users/user groups. Individual configuration settings of the Batch Control Center and recipe editor are saved as a user-specific profile when logging off. This means that you can work in a familiar environment as soon as you log on again at any client in the plant.

© Siemens AG 2013

Communication with the automation systems

Depending on the operating mode, SIMATIC BATCH communicates with the automation systems (AS) via the PCS 7 operator system (OS) or direct via S7 DOS.

SIMATIC BATCH provides special faceplates and OS controls for controlling and monitoring units and equipment phases. As a rule, instances of an SFC type are used as the interface to the lower automation level.

Operating modes for recipe processing

- PC mode: execution of complete recipe logic in the batch server
- AS mode: execution of unit recipe logic in the automation system:
  - Very fast step changing times
  - Improved determinism during batch processing
  - Enhanced availability
- Mixed mode: parallel application of PC and AS modes in one batch

SIMATIC BATCH highlights

- Modular architecture with flexible scalability (hardware and software)
  - Optimum scaling to plant size and individual requirements
  - Grows with the plant configuration; no expensive spare capacities
- High availability thanks to redundant batch servers
  - No loss of batch data
  - Automatic synchronization of batch data
- PC and AS modes
- Homogenous integration of SIMATIC BATCH into the HMI strategy and the engineering of SIMATIC PCS 7 via system interface
  - No customized interfaces
  - No double configuring for batch-specific engineering data
  - OS Controls for integration in process displays
- Recipes independent of unit
  - Considerable simplification in recipe management and validation
  - Flexible control strategy and optimum plant utilization through occupation strategies and assignment of units during batch runtime
- Flat and hierarchical recipes according to ISA-88.01
  - Creation of recipes oriented according to process engineering
  - Quick, easy and fault-minimized creation
- Importing and exporting of master recipes, formulas and library objects
- Saving and archiving in the Process Historian and in XML format as well as comprehensive reporting of batch data
  - Production becomes transparent and comprehensible
  - Reliable operator prompting, safe response to process faults
  - Viewer for archived batches
- Reduction in engineering and validation overhead through:
  - Type/instance concept of SFC
  - Separation of procedure and formula
  - ROP library and configuration independent of unit
  - Multiple usage, central modification
- Validation support according to 21 CFR Part 11 through:
  - Audit Trail (change log)
  - Free and system-aided versioning
  - Libraries with recipe operations and formulas
  - User administration with access protection and electronic signature
- Interfacing an SIMATIC IT or any other MES systems

© Siemens AG 2013

Batch client functionality

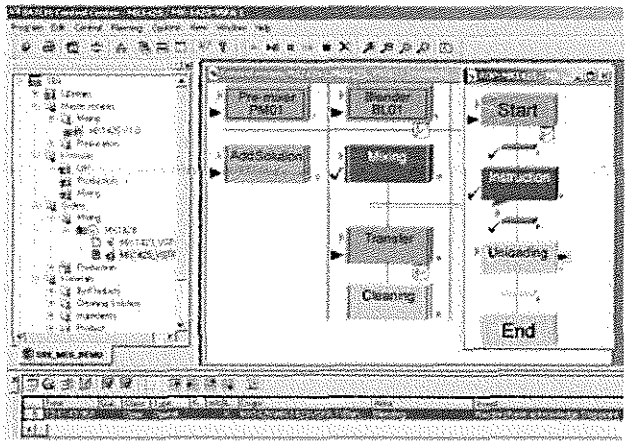

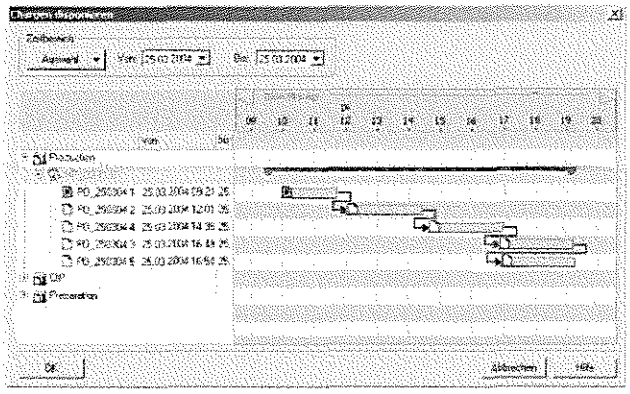

Batch planning

Batch Control Center

The Batch Control Center (BatchCC) is the "command center" for monitoring and controlling batch processes. The data relevant to SIMATIC BATCH are managed using a GUI. BatchCC offers powerful functions for the following tasks:

- Reading in and updating the process cell data of the basic automation
- Definition of user privileges for all functions, for clients, or for units of SIMATIC BATCH
- Definition of material names and codes
- Management of master recipes
- Management of libraries with recipe elements (library operations)
- Editing of formula categories and management of associated formulas (parameter sets)
- Creation of master recipe from control recipe
- Exporting and importing of master recipes, formulas and library objects
- Creation of batches with master recipes
- Starting of batch processing and controlling of batches
- Monitoring and diagnostics of batch processing
- Occupation strategy during creation of the recipe, and assignment of units during batch runtime
- Modification/deletion/insertion of objects and structure elements (loops, transitions etc.) of the recipe online
- Recording and archiving of recipes and batch data
- Calling of SFC visualization directly from the control recipe

Batch Planning

BatchCC can be used to create production orders and batches individually. However, Batch Planning offers significantly more planning functions. The batches for a large number of production orders can then be planned in advance. In addition to planning, the scope of functions include the modification, cancellation, deletion and release of batches.

Special list representations for order categories, production orders, batch planning, batch status or batch result support and simplify batch planning and batch control. Creation and distribution of the batches for a production order are possible manually, but can also be carried out automatically depending on the definition of the batch number or production quantity. All batches including their unit allocation can be clearly presented in a combination of Gantt diagram and table. Time conflicts or those resulting from multiple allocation of units are identified by symbols. Time conflicts can be eliminated simply by shifting the associated batches in the Gantt diagram. The following batch properties can be set and changed:

- Quantity
- Start mode (immediately, following operator input, or time-driven)
- Unit allocation
- Formula (parameter set)
- Run sequence (chaining to previous or subsequent batch)
- Display of planned runtime for a batch
- Definition of minimum time interval for batch chaining

Batch OS Control

Batch OS Controls output in the process display permit operation and monitoring of batch processes.

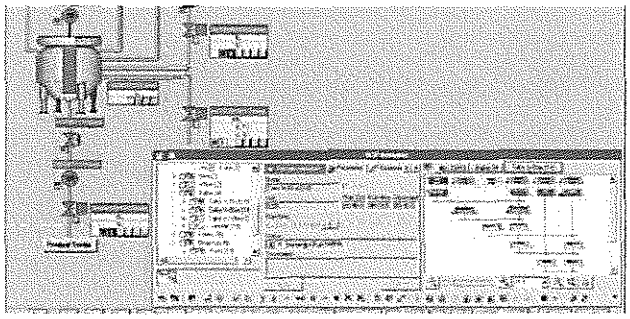

Process picture including Batch OS Control

© Siemens AG 2013

Recipe system, archiving and logging

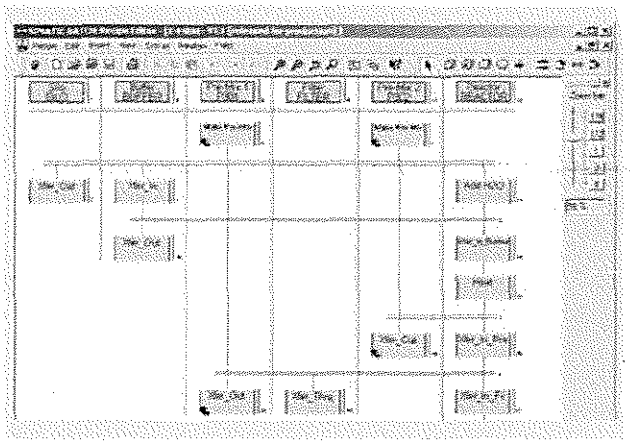

SIMATIC BATCH Recipe Editor

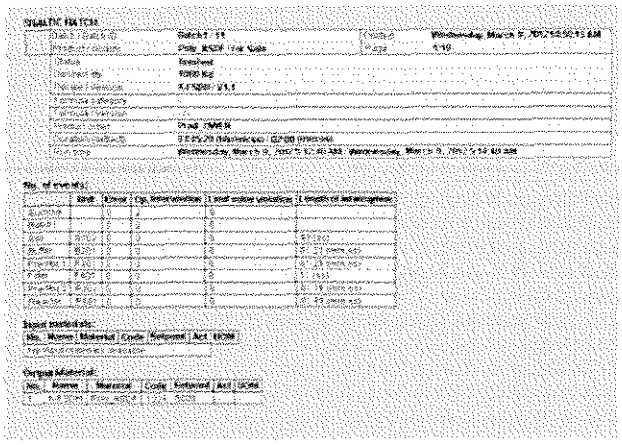

Example of a batch report

Recipe Editor

The Recipe Editor is used for easy, intuitive creation and modification of master recipes and library operations. It possesses a GUI, processing functions for individual and grouped objects, and a structural syntax check. The basis for recipe creation are the batch objects created from the plant configuration using the SIMATIC PCS 7 Engineering System, e.g. units and equipment phases. The Recipe Editor can be called from BatchCC, or it can be started individually.

The following tasks can be performed with the Recipe Editor:

- Creation of new master recipes and library operations
- Modification of existing master recipes and library operations (changes to structures or parameters)
- Querying of statuses of the recipe objects and of process values in transition conditions
- Assignment of route control locations to the transport phases as transfer parameters (source, target, via), in order to direct products of one batch into other units (local or external plants)
- Configuring arithmetic expressions for calculating setpoints for transitions and recipe parameters from recipe variables and constants
- Documentation of master recipes and library operations
- Validation under inclusion of user-specific plausibility checks
- Selection of appropriate units using static equipment properties and dynamic attributes
- Releasing master recipes and library operations for test or production

Recipe elements for handling of exceptions

Monitoring of process states is possible during runtime by marking freely selectable recipe sections. It is possible to react to evaluated events or faults using a command block or jump function in a special container.

Batch reports

Batch reports comprise all data required for the reproduction of batch process, for proof of the quality, and for compliance with statutory directives, including

- Identification data
- Control recipe data
- Effective production data
- Time sequence of steps
- Status messages, fault messages and alarms
- Operator interventions
- Process values

Recipe reports

The recipe reports contain the production data, e.g.

- Recipe header data
- Recipe topology
- Input material, output material and parameter lists

Viewer for archived batches

The batch data which is only accessible to authorized persons or systems can be saved in XML format – locally, on a network drive, or on a central archive server. It is insignificant whether the connected batches originate from a single SIMATIC BATCH plant or from several plants. The batches archived in this manner can be displayed again as a control recipe in the Batch Control Center using a Viewer.

© Siemens AG 2013

Hierarchical and recipes not specific to the unit

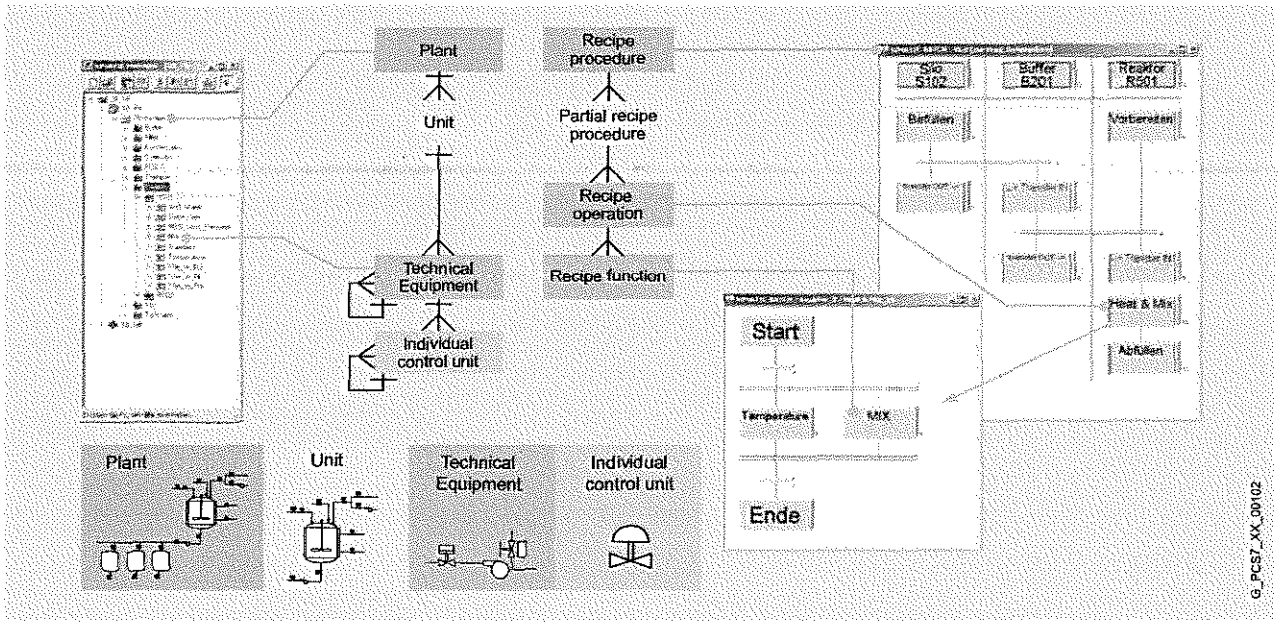

Representation of hierarchical recipe structure in the plant model

Hierarchical recipes according to ISA-88.01

SIMATIC BATCH and SIMATIC PCS 7 form a functional unit that fully covers the models described in the ISA-88.01 standard. The hierarchical recipe structure is mapped on the plant model as follows:

- Recipe procedure for controlling the process or production in a process cell
- Recipe unit procedure for controlling a process step in a unit
- Recipe operation/recipe phase to implement the process engineering task/function in an equipment module facility

Non-specificity and assignment of units

Creation of recipes that are not bound to a specific unit minimizes the engineering overhead and provides significant advantages for validation. During creation of the recipe, the recipe unit procedures are only assigned selection criteria. The final assignment of the units following evaluation of the static and dynamic properties (e.g. vessel size and cleaning status) is then carried out during runtime. In the cases of batches which run for a longer period and where the units are not to be already determined and occupied at the start of a batch, the assignment is only carried out at the time of use. Conflicts in the unit allocation are detected by the system, and displayed.

The following occupation strategies for unit assignments permit optimum orientation according to the specific plant situation:

- "Manual selection of unit" when the units are occupied
- "Preferred unit" for preselection at time of recipe creation
- Determination of "Unit unused for longest time" to achieve uniform utilization
- Assignment of unit to be used by means of "Process parameters" from external module (e.g. scheduler)

© Siemens AG 2013

Rationalization of recipe creation and supporting of validation

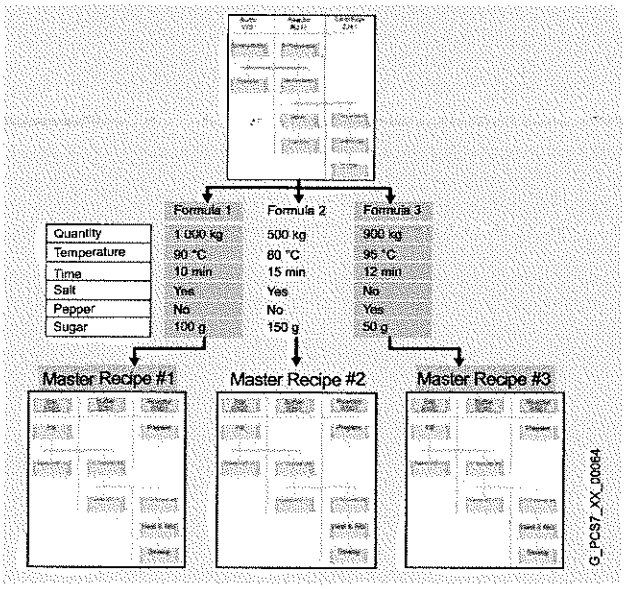

Separation of procedure and formula

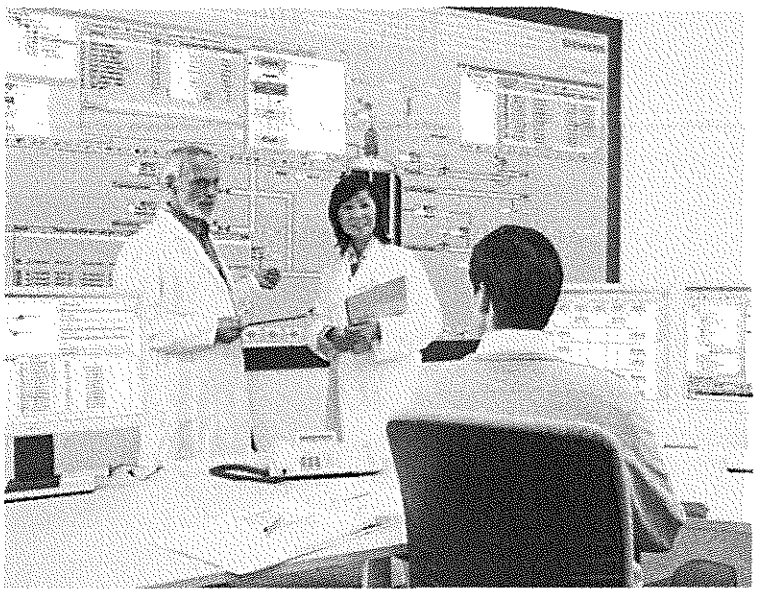

Library with recipe operations (ROP)

Recipe operations managed in a user library (ROP library) can be installed in the recipe procedures of hierarchical recipes as a reference and thus modified centrally. With flat recipes, referencing is possible in an analogous manner to so-called substructures in the user library.

This reduces the requirements for engineering and validation. If the reference link is broken, the recipe operation or the substructure becomes a fixed component of the recipe procedure, and is thus independent of further central modifications.

Separation of procedure and formula

The flexibility achieved by recipes which are independent of specific units can be increased even further if the procedure and parameter sets (formulas) are separated from one another. Various master recipes can be created by linking several formulas using a recipe procedure. This enables central modification of procedures. The formula structure is determined by the formula category defined by the user.

Application Programming Interface (API)

The SIMATIC BATCH API Application Programming Interface is an open interface for customer-specific extensions. To program special industry-specific or project-specific applications it offers the user access to data and the functions of SIMATIC BATCH.

Validation according to 21 CFR Part 11

As a manufacturer of process control systems, Siemens has specially trained personnel, as well as many years of experience in quality management and plant validation. SIMATIC BATCH particularly supports validation according to 21 CFR Part 11 through:

- Consistent standardization, e.g. with
  - Type/instance concept of SFC
  - Recipe creation independent of a specific unit
  - Separation of procedure and formula
  - Library recipe operations
- Audit Trail (change log):
  - Recording of changes in recipes and recipe operations (saved with modified object)
  - Recording of changes during production (in the batch report), including the operations of the individual control level belonging to the corresponding batch
- Free and system-aided versioning of recipes, formulas, and library elements
- Central user administration with access control through SIMATIC Logon
- Electronic signature for release of master recipes, formulas and library objects based on SIMATIC Logon

For additional information on SIMATIC BATCH, see:
www.siemens.com/simatic-batch

© Siemens AG 2013

Route control with SIMATIC Route Control

SIMATIC PCS 7 rationalizes material transport

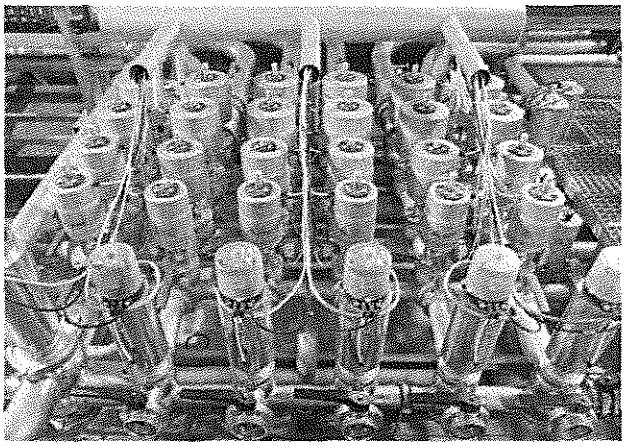

SIMATIC Route Control (RC) expands the SIMATIC PCS 7 process control system with a sector-independent tool for the configuration, control, monitoring and diagnostics of material transport in pipeline networks or on conveyor belts. Thus SIMATIC PCS 7 is capable of automating not only production processes and associated warehouses but also the material transport linking both areas.

SIMATIC Route Control is suitable for small plants with simple, static transport routes or also for plants in the medium and top performance ranges possessing comprehensive, complex routes and pipeline networks.

SIMATIC Route Control is particularly predestined for the following requirements:

- Frequent conversions and extensions of the transport network including actuators and sensors
- Transport routes with high flexibility, characterized by:
  - Regularly changing materials
  - Dynamic selection of the origin and destination of the material transport (including reversal of direction on bidirectional transport routes)
- Numerous simultaneous material transports
- Dynamic occupation of units using SIMATIC BATCH

This requirement profile particularly applies to plants with numerous branched pipelines or comprehensive tank farms typical for the chemical, petrochemical or food and beverage industries.

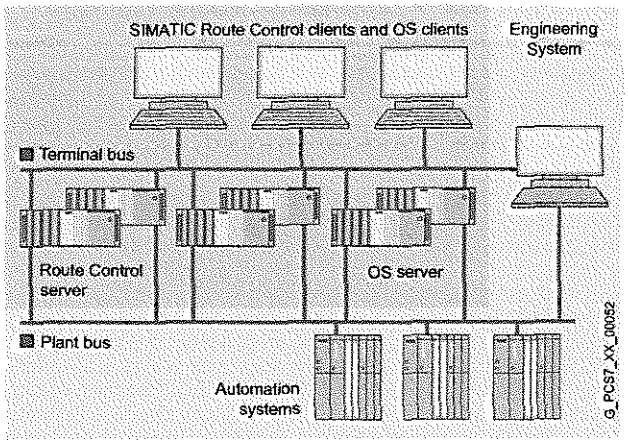

SIMATIC PCS 7 multiple station system with SIMATIC Route Control

When transporting solid materials on conveyor belts, the sequence for switching actuators on and off can be cascaded using WAIT elements. When transporting liquids in pipelines, the valves can be cleaned by means of pulses, with the sequence and time intervals being set using WAIT elements.

Modular architecture

Thanks to its modularity and discrete scalability with cumulative SIMATIC Route Control (10, and 50 quantity options for simultaneously active material transports), SIMATIC Route Control can be flexibly adapted to different plant sizes and architectures (single-user/multi-user systems) up to the project upper limit of 300 routes.

Integration in SIMATIC PCS 7

The Route Control Engineering software, consisting of engineering tool, wizard and block library, is concentrated together with the other engineering tools in the central SIMATIC PCS 7 engineering system.

For small plants, SIMATIC Route Control can be installed either alone or together with the OS software on a single station system. Distributed multiple station systems with client/server architecture, expandable with up to 32 clients per server, are typical for the automation of material transports with SIMATIC Route Control.

SIMATIC PCS 7 supports a Route Control server or pair of Route Control servers in the multiuser system which is limited to 12 servers/pairs of servers. In the case of multiple station systems with small quantity frameworks it is also possible to operate the Route Control Server, Batch Server and OS Server on shared basic hardware. However, availability will be higher and performance better if the subsystems are installed on separate servers or redundant pairs of servers.

A synonym for the Route Control client is the Route Control Center (RCC). It can be installed on an OS client, a batch client or separate client hardware.

In the mimic diagram of the SIMATIC PCS 7 operator system, each route block is represented by an RC block symbol and an RC faceplate. The selection of locations (synonyms: nodes, plant points) for partial routes and routes is facilitated by drop-down list boxes. Locations are parameters for requesting a material transport (source, destination, intermediate points). They mark the start and end of each partial route and thus also the source and destination of a material transport.

For access control and for managing the graded user rights for engineering, operating and maintenance personnel, SIMATIC Route Control uses the SIMATIC Logon integrated in the process control system.

Route Control Engineering

Route Control configuring supplements basic configuring with blocks from the SIMATIC PCS 7 library. Even existing SIMATIC PCS 7 plants are therefore easy to expand with SIMATIC Route Control.

Technological elements of relevance to control of material transport (RC elements) are adapted in the CFC editor using uniform interface blocks from the Route Control library. The RC elements include:

- Control elements (actuators)
- Sensor elements (sensors)
- Parameter elements (setpoints)
- Connection elements (material information related to partial route)
- WAIT elements

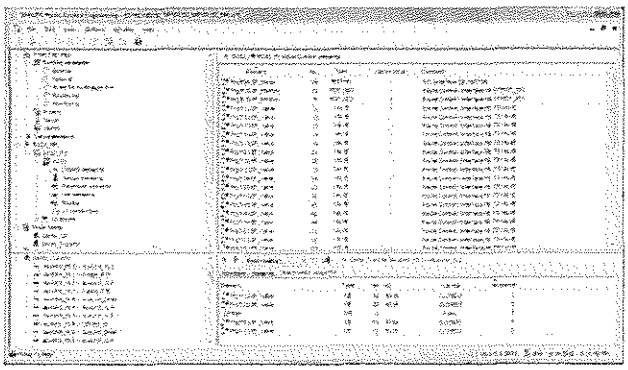

Configuration with the Route Control engineering tool

Locations of partial or complete routes are configured in the SIMATIC Manager as "Equipment properties of units" and transferred to the RC project together with the other RC-relevant basic data of the SIMATIC PCS 7 project.

Route Control library
The Route Control library contains blocks for RC and transport route configuration and interface blocks for RC elements. It is provided in the catalog of the CFC editor.

Route Control wizard
The Route Control wizard constitutes the interface between the SIMATIC PCS 7 basic configuration supplemented with RC interface blocks and the actual RC configuration in the RC engineering tool. The wizard, which can be called up from the SIMATIC Manager menu, accepts the RC-specific configuration data of the SIMATIC PCS 7 project into the Route Control engineering. In doing so, it carries out a plausibility check, defines the AS-OS and AS-AS communication connections (NetPro and CFC), and configures the RC server signals.

Route Control Engineering tool
Once the RC-relevant basic data of the PCS 7 project has been transferred to the RC project, the next step is to configure the RC-specific objects with the Route Control engineering tool:

- Subdivision of the transport routes into flexible partial routes; parameters "bidirectional" and "priority"
- Interconnection of the RC elements by means of installing in a partial route and thus transfer of type-specific additional properties to these RC elements, e.g. in the base position "Close valve"
- Assignment of the partial routes to mode tables, e.g. "cleaning" or "product transport", that operate as as a criterion in the route search to restrict the resulting quantity
- Assignment of up to 32 technological sequence functions (function stages) that determine the sequence of material transport by means of the RC elements interconnected in the partial routes, e.g. base position of the control elements, open transport valves, open origin valve, switch on pump

© Siemens AG 2013

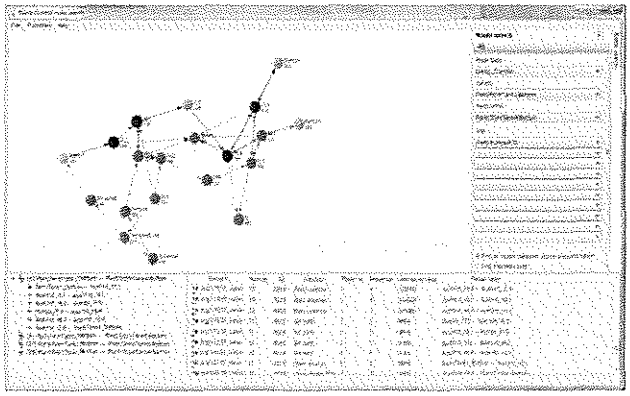

Graphical offline route search to determine all possible route combinations

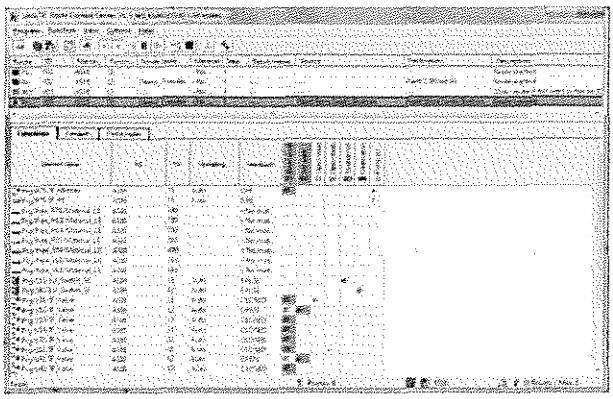

Route Control Center (RCC)

Configuration of the partial routes and assignment of the RC elements to the partial routes are performed in a matrix of the Route Control engineering tool. With the aid of generic elements, objects or blocks generated on a user-specific basis can be integrated into the RC project and handled like RC elements.

Similarly to a navigation system, the graphically visualized offline route search determines all possible route combinations. Errors in the route network or undesired routes can be detected in advance. A preferred route can be selected from the results of the offline route search, and saved as a static route. An active route can also be saved for re-use via the Route Control Center. A saved route takes priority in a route request.

Special configuration functions make it easier to perform repetitive routine work and extend the range of options for controlling material transport, e.g.:

- Exporting configuration data in the form of CSV files to Microsoft Excel, copying and editing the data there, and then re-importing the files into Route Control
- Controlling the joint use of partial routes by configurable function IDs
- Checking of material compatibilities by evaluating the partial route material IDs and interlocking of partial routes in the case of incompatible material sequences
- Injection of setpoints coming from the process at runtime into the route block (e.g. weighed quantity)

Route Control Center (RCC)

The RCC can be called from the RC faceplate of the route block or from the keyset on the operator station. It displays all route data and error information relevant to material transport in several coordinated views. Key functional features are:

- Overview of all RC elements and request details
- Selection of manual/automatic mode
- Operation of the material transport in manual mode:
  - Request, start, stop, continue and terminate material transport
  - Set/modify requirement parameters (locations, origin, destination, intermediate points)
  - Set/modify general properties (mode table, function ID, material ID and "ignore error")
  - Enable/disable sequence functions
- Diagnostics of material transport request errors caused by locked RC elements, locked partial routes, inconsistent actuations or prohibited sequential material
- Diagnostics of currently running material transports:
  - Transport route status display shown in color and text in the route view of the RCC
  - Detailed analysis of feedbacks from RC elements
- Server functions: select RC server, display RC server status, update view
- Display of operator who has logged on
- Definition of route parameters (source, destination, material, function ID etc.), and saving and loading these settings with names
- Switchover between "AS in maintenance" and "AS in operation"

© Siemens AG 2013

Route Control Server

After the transport network has been configured and the variants of a material transport tested, the Route Control project engineering data are transferred to the Route Control Server where they can then be activated at a suitable time. The new data are then considered when searching for a route.

The Route Control Server (RC Server) supplies the Route Control Clients (Route Control Centers) with the necessary data and transfers their operations to the automation systems.

If a material transport is waiting, a route is requested either via the controller or by the operator at the Route Control Center (RCC). Apart from specifying the source, destination and up to 10 optional locations, this also includes creating a start signal on the route control block of the automation system. If no saved route is available, the RC Server starts the route search and, if possible, combines the statically defined partial routes into one complete transport route. From there on, Route Control takes over the control and monitoring of all RC elements involved in the transport route. The process cell control only has to switch the individual technological functions. When errors occur, the operator receives detailed diagnostics information about the cause, e.g. why the search for a transport route failed.

For maintenance purposes, an automation system can be specifically set to "in maintenance" (out of service). The material transports operating via this automation system are then completed, but no more new ones are permitted.

For additional information, see:
www.siemens.com/simatic-pcs7/routecontrol

SIMATIC Route Control highlights

- Flexible, modular, and scalable architecture for single-user and multiple station systems
  - Optimum adaptability to plant size and individual requirements
  - No expensive reserve capacities
  - High availability thanks to redundant Route Control Servers
- Homogenous integration into the HMI strategy and the engineering of SIMATIC PCS 7
- Can be combined with SIMATIC BATCH – material transport from batch control recipe
- Mapping of route network of the plant through partial routes
- Fast response to plant modifications during configuration, commissioning or runtime
- Exclusive assignment of RC elements and partial routes involved in material transport
- Reduction in configuration overhead and commissioning times
  - Configuring partial routes by means of repeated application
  - Data export to Microsoft Excel and reimporting
  - Reduction in complex, repeated tasks through RC wizard
  - Graphical offline route search determines all route combinations in advance and finds undesired routes
- Consideration of material compatibilities to avoid undesired mixing
- Offline testing for completeness, inconsistencies, and undesired combinations
- Detailed diagnostics of material transport requirement faults and current material transport
- Saved static routes are executed with priority when a route is requested
- Definition of on/off switching sequences using staggered control of actuators, e.g. for conveyor belts

© Siemens AG 2013

Safety Integrated for Process Automation

Comprehensive range of products and services for process safety

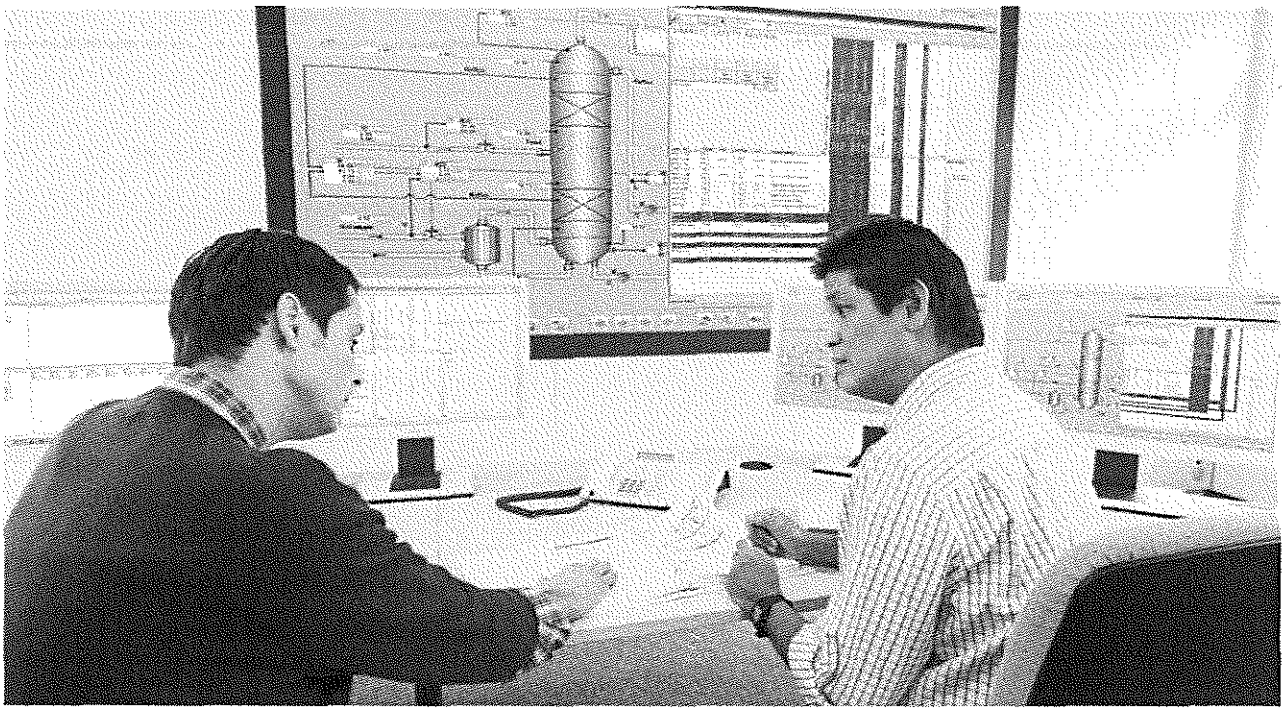

The process industry frequently features complex production sequences where materials and mixtures which are explosive or dangerous to health are produced or processed. A fault or failure could have disastrous consequences.

Therefore the objective of Siemens safety technology is to minimize potential hazards for personnel, plant and environment by means of technical measures, without adversely affecting the production process. A reliable Safety Instrumented System (SIS) is therefore required which is able to automatically place the plant into a safe state should critical events occur, to continue operating it safely under defined conditions, and to limit any negative effects in the event of a safety-related event.

Safety Integrated for Process Automation provides a comprehensive range of products and services for safe, fault-tolerant applications in the process industry – based on the Siemens safety-related system. It offers complete safety-related functionality – extending from safe instrumentation for signal recording and conversion, to safe and fault-tolerant control, up to the actuator (e.g. positioner, valve, or pump).

The enormous potential of Safety Integrated for Process Automation can best be exploited in conjunction with SIMATIC PCS 7. Thanks to the modularity and the flexibility of the safety-related products this combination is extremely variable. It is not just the degree of integration of safety-related systems that can be individually defined in the process control system, it is also the degree of redundancy for controllers, fieldbus and process I/O (Flexible Modular Redundancy). Thanks to the reduced spatial requirements, the scope of hardware and wiring, as well as reduced mounting, installation and engineering overhead, complete (common) integration of the safety-relevant systems in SIMATIC PCS 7 offers the greatest cost advantages viewed over the entire life-cycle of a plant.

Both the safety technology and the safety applications implemented with it are characterized by great efficiency and comply with both national and international standards, such as:

- IEC 61508 – basic standard for specifications, as well as for the design and operation of safety-related systems
- IEC 61511 – application-specific standard for the process industry

© Siemens AG 2013

Product range

Safety Integrated for Process Automation – Product spectrum for SIMATIC PCS 7		
	Engineering	Configuration of safety functions (up to SIL 3) using TÜV-certified function blocks and Continuous Function Chart (CFC) or SIMATIC Safety Matrix (Cause&Effect matrix)
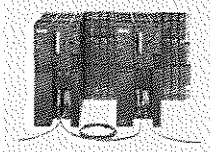	**Automation systems** AS 410F/FH, AS 412F/FH, AS 414F/FH, AS 416F/FH, AS 417F/FH	Fail-safe, fault-tolerant controllers with a redundant or non-redundant design (SIL 3) for the bottom, mid and top performance ranges
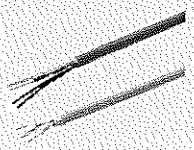	**PROFIsafe with PROFIBUS** **PROFIsafe with PROFINET**	For standard and safety-related communication on just one bus cable, certified according to IEC 61508 (SIL 3)
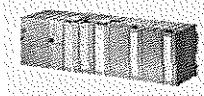	**SIMATIC ET 200**	ET 200M: Modular I/O for multi-channel applications with safety-related signal modules (F-DI, F-DO, F-AI), SIL 2/SIL 3; IP20 degree of protection
		ET 200iSP: Modular, intrinsically-safe I/O with safety-related electronic modules (F-DI Ex, F-DO Ex, F-AI Ex), SIL 3, IP30 degree of protection
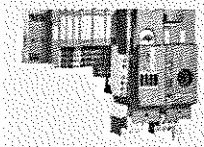		ET 200S: Bit-modular I/O with safety-related electronic modules (F-DI, F-DO) and safety-related motor starters, SIL 2/SIL 3; IP20 degree of protection
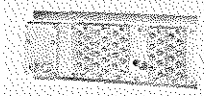		ET 200pro: Modular, very compact I/O with safety-related electronic modules (F-DI, F-DI/F-DO), SIL 2/SIL 3; F-switch for switch-off of standard I/O and control of motor switches; IP65/66/67 degree of protection
	Process instruments/ process devices	Safe process instruments/devices on PROFIBUS: SITRANS P DS III PA pressure transmitters (proven in use SIL 2) with PROFIsafe, SIPART PS2 PA (SIL 2), SIMOCODE pro with DM-F local/PROFIsafe (SIL 3)
		Safe process instruments/devices for connection to ET 200M remote I/Os: SITRANS P DS III analog/HART (SIL 2/SIL 3), SITRANS TW series (SIL 1), SITRANS TH200/300 (SIL 2/SIL 3), SITRANS TR200/300 (SIL 2/SIL 3), SITRANS LR250 HART (SIL 2), SIPART PS2 2/4-wire (SIL 2)
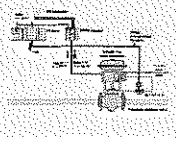	**Applications**	Partial Stroke Test Predefined function blocks and faceplates for online valve test to enable preventive valve diagnostics without affecting production

© Siemens AG 2013

Safety-related design versions

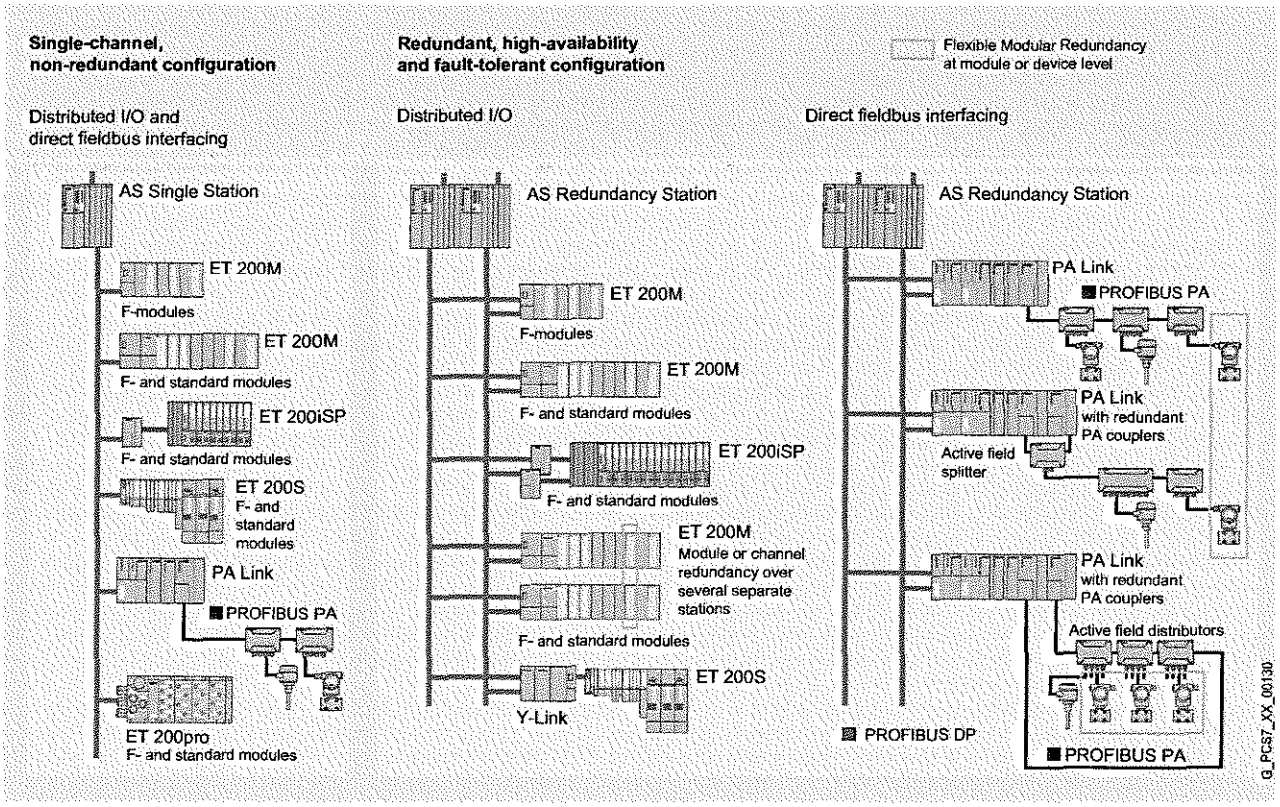

Safety-related design versions with PROFIBUS communication

The PROFIsafe profile allows safety-related communication for between the controller and the process I/O via the open standard buses PROFIBUS and PROFINET. The decision between these two standard buses seriously influences the architecture of the safety-related system.

Safety-related design versions with PROFIBUS

In the case of a safety-related system with PROFIBUS communication integrated into SIMATIC PCS 7, a distinction is made across all architecture levels between two design versions:

- Single-channel, non-redundant design
- Redundant, high availability, and fault-tolerant design

Both alternatives are extremely variable and offer generous scope for design. At the individual architectural levels (controller, fieldbus, distributed I/O), the configuration options shown in the diagram are available depending on the process I/O used.

Standard (basic process control) and safety-related functions can be combined flexibly, not only in the area of the distributed I/O. Even at the controller level, they can combined in one system or separate. In addition, there are numerous possibilities using flexible modular redundancy (FMR).

© Siemens AG 2013

Flexible Modular Redundancy (FMR)

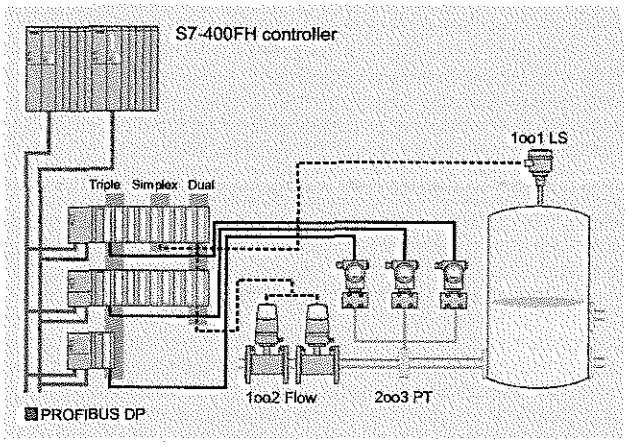

Flexible Modular Redundancy using the example of a safety-oriented, fault-tolerant plant configuration

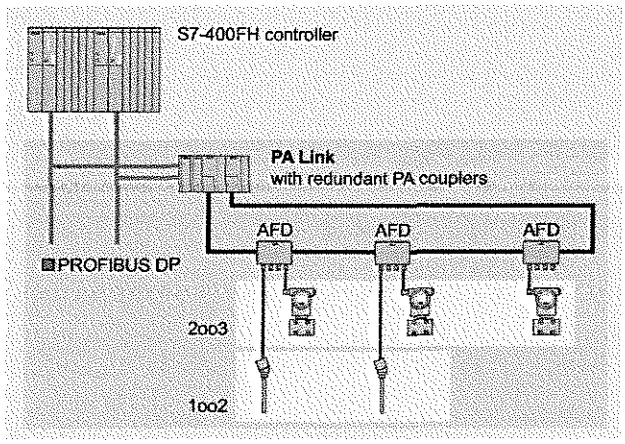

Safety-related and fault-tolerant architecture based on a PROFIBUS PA ring topology

Depending on the automation task and the associated safety requirements, the degree of redundancy may be defined separately for the controller, fieldbus and distributed I/O level, and coordinated with the field instrumentation. In this way, individual fault-tolerant architectures which are precisely tailored to the individual tasks can be implemented, and tolerate several faults occurring at once. As FMR provides redundancy only where it is actually required, comparatively more attractive and cost-effective applications are possible than with conventional redundancy architectures.

As shown in the example of a process cell with ET 200M distributed I/O, the total of the tasks can produce a mix of different degrees of redundancy within one architecture level (1oo1, 1oo2, 2oo3).

Not only can FMR be applied to plant configurations with distributed I/O systems, but it can also be transferred to configurations with direct connection of devices via the PROFIBUS PA fieldbus. As shown in the example diagram, the PROFIBUS PA ring architecture likewise permits cost-effective, safety-related and fault-tolerant applications with minimum use of devices and cables.

Active field distributors AFD4/AFD8 can be used in operating environments up to Ex Zone 2/22, and active field distributors AFDiS in operating environments up to Ex Zone 1/21. The AFDiS spur lines can be laid up to Zone 0/20 for connecting appropriate devices.

Safety-related design versions with PROFINET

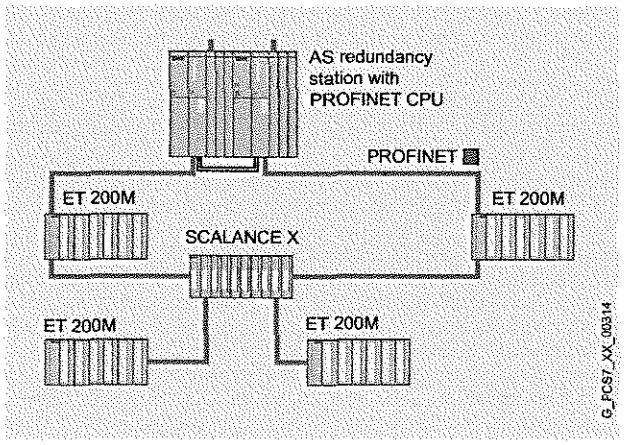

Safety-related design versions with AS redundancy station and PROFINET IO communication

PROFINET supports safety-related systems on the basis of safety-related SIMATIC PCS 7 automation systems (F/FH) and ET 200M remote I/Os. With a safety-related system with PROFINET communication, the ring is the topology of choice from the point of view of availability. The media redundancy of the ring means that bus interruptions or failure of a node will not result in failure of the entire segment.

The maximum availability level is achieved with a PROFINET ring on a redundant controller (AS Redundancy Station). In such a configuration, the structure of PROFINET IO communication referred to as system redundancy enables the I/O devices to establish a communication connection to each CPU of the AS Redundancy Station over the topological network.

© Siemens AG 2013

Engineering tools for safety functions

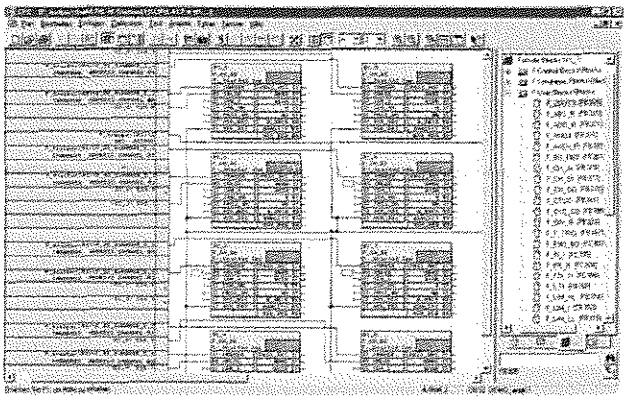

Engineering of safety-related applications with CFC

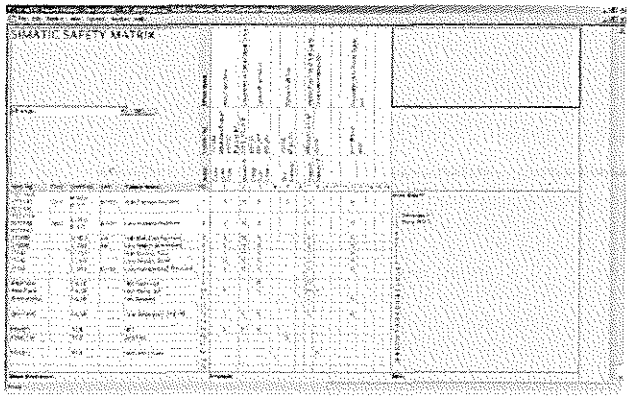

Safety Matrix: assignment of exactly defined reactions (effects) to occurring events (causes)

The F-block library in S7 F Systems and the SIMATIC Safety Matrix are available for configuring and programming safety-related controllers.

S7 F Systems with F-block library

The S7 F Systems engineering tool permits parameterization of safety-related controllers as well as safety-related F-modules of the ET 200 series. It supports configuration by means of functions for:

- Comparison of safety-related F-programs
- Recognition of changes in the F-program using the checksum
- Separation of safety-related and standard functions.

Access to the F-functions can be password-protected. The F block library integrated in S7 F Systems contains predefined function blocks for generation of safety-related applications with the CFC or the Safety Matrix based on it. The certified F-blocks are extremely rugged and intercept programming errors such as division by zero or out-of-range values. Diverse programming tasks for detecting and reacting to errors can thus be omitted.

SIMATIC Safety Matrix

The SIMATIC Safety Matrix which can be used in addition to S7 F Systems is an innovative safety lifecycle tool from Siemens, that can be used not only for the user-friendly configuration of safety applications, but also for their operation and service. The tool, which is based on the proven principle of a cause & effect matrix, is ideally suited to processes where defined statuses require specific safety reactions.

The Safety Matrix not only means that programming of the safety logic is significantly simpler and more convenient, but also much faster than in the conventional manner.

During the risk analysis of a plant, the configuration engineer can assign exactly defined reactions (effects) to events (causes) which may occur during a process. The possible process events (inputs) are initially entered in the horizontal lines of a matrix table comparable to a spreadsheet program, and then their type and quantity, logic operations, any delays and interlocks as well as any tolerable faults are configured. The reactions (outputs) to a particular event are then defined in the vertical columns.

The events and reactions are linked by simply clicking the cell at the intersection point of line and column. Using this procedure, the Safety Matrix automatically generates complex, safety-related CFC programs. Special programming knowledge is not required, and the configuration engineer can concentrate fully on the safety requirements of his plant.

© Siemens AG 2013

Safety-related controllers and process I/O

Safety-related automation systems

The safety-related SIMATIC PCS 7 automation systems are available in two design versions:

- **AS Single Station** of type AS 410F, AS 412F, AS 414F, AS 416F, and AS 417F, with only one CPU, safety-related
- **AS Redundancy Station** of type AS 410FH, AS 412FH, AS 414FH, AS 416FH, and AS 417FH, with two redundant CPUs, safety-related and fault-tolerant

All these systems have multitasking capability, i.e. several programs can be executed simultaneously in one CPU, both basic process control applications and safety-related applications. Working together with the safety-related signal modules of the ET 200 distributed I/O systems or directly via fail-safe transmitters connected via the fieldbus, they detect faults both in the process and their own internal faults and automatically set the process cell to a safe state in the event of a fault. Safety programs executed on different automation systems of a plant are able to carry out safety-related communication with one another over the Industrial Ethernet plant bus.

The standard PROFIBUS or PROFINET is used together with the PROFIsafe profile for safety-related communication between the CPU of the automation system and the safety-related process I/O. In both cases, operation of standard and safety-related components on the same bus is possible. This makes a separate and expensive safety bus unnecessary.

The PROFIsafe profile is implemented as an additional software layer within the devices/systems without modifying the communication mechanisms of the standard PROFIBUS. PROFIsafe expands the frames by additional information with which the PROFIsafe communications partners can recognize and compensate transmission errors such as delays, incorrect sequences, repetitions, losses, addressing errors, or data falsification.

Safety-related F-modules

The safety functions of the F/FH automation systems are perfectly matched to the following safety-related F-modules of the ET200 range:

ET 200M	■ F-DI 12/24 x 24 V DC ■ F-DI 4/8 x NAMUR [EEx ib] ■ F-DO 10 x 24 V DC/2 A ■ F-DO 8 x 24 V DC/2 A, ■ F-AI 3/6 x 0 ... 20 mA or 4 ... 20 mA (HART)
ET 200iSP	■ F-DI Ex 4/8 x NAMUR ■ F-DO Ex 4 x 17.4 V DC/40 mA ■ F-AI Ex HART 4 x 0 ... 20 mA or 4 ... 20 mA
ET 200S	■ F-DI 4/8 x 24 V DC ■ F-DO 4 x 24 V DC/2 A
ET 200pro	■ F-DI 8/16 x 24 V DC ■ F-DI/DO 4/8 x 24 V DC (DI) and 4 x 24 V DC/2 A (DO)

Safety-related F-motor starter for ET 200S

Safety-related motor starters up to 7.5 kW, can be expanded by brake control module:

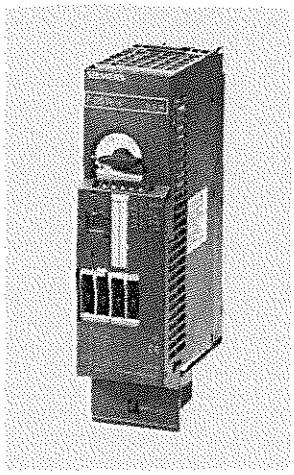

- F-DS1e-x direct-on-line starter
- F-RS1e-x reversing starter

Initiated by a switch-off signal, safety-related ET 200S motor starters can be selectively switched off by the series-connected PM-D F PROFIsafe power module. In addition to a circuit-breaker/contactor combination, the safety-related motor starters have a safe electronic evaluation circuit for fault detection.

If the contactor to be switched in the case of an emergency stop fails, the evaluation electronics detects a fault and deactivates the circuit-breaker in the motor starter in a safety-related manner.

© Siemens AG 2013

PROFIBUS PA devices for safety shutdowns

The SITRANS P DSIII digital pressure transmitter which can be used on the PROFIBUS PA fieldbus is suitable for SIL 2 safety shutdowns conforming to IEC 61508/ IEC 61511-1. For this reason, Siemens has extended its standard instrument for measuring pressure, absolute pressure and differential pressure to include a PROFIsafe driver.

In a safety application, the pressure transmitter can be interconnected via PROFIBUS PA with a safety-related automation system (F/FH). The digital input of the PROFIBUS PA SIPART PS2 electropneumatic positioner can be used for the safe shutdown. With a redundant, multi-channel design, measuring circuits can also be implemented up to safety integrity level SIL 3.

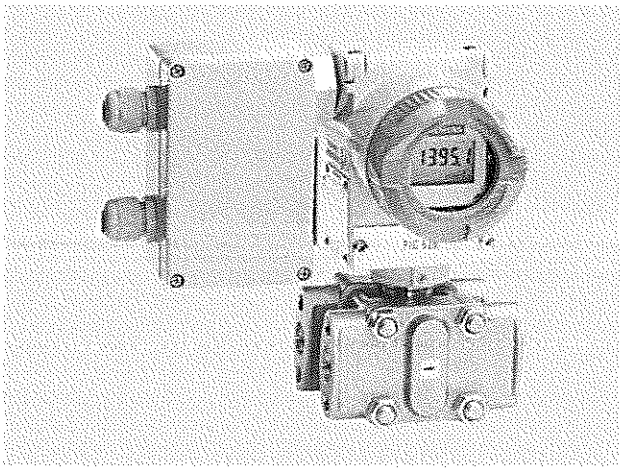

For additional information, see:
www.siemens.com/simatic-pcs7/process-safety

Highlights of Safety Integrated for Process Automation

- Comprehensive range of products and services for safe, fault-tolerant, and high-availability applications in the process industry
  - Easy implementation, operation, and maintenance of safety applications
  - Reliable elimination of dangers and risks
  - Adaptable and high level of innovation security
- Homogenous integration of safety technology in the SIMATIC PCS 7 Process Control System
  - Processing of basic process control functions and safety functions in one controller
  - Safety integrity level SIL 3 possible with only one CPU
  - Standard and safety-related communication via PROFIBUS/PROFINET with PROFIsafe; no separate safety bus
  - Mixed operation of standard and safety-related F-modules in ET 200 stations
  - Uniform data management for basic process control and safety-related automation; no complex data management
- Integration of safety-related application into process visualization of PCS 7 operator station
- Automatic consideration of safety-related fault messages with their time stamp
- Configuration of safety functions is part of the integrated SIMATIC PCS 7 system configuration
  - S7 F systems, CFC, and SIMATIC Safety Matrix are anchored in the engineering toolset
  - Uniform configuration of basic process control functions and safety functions with CFC
  - Safety Matrix for creation of safety functions even faster, simpler and more user-friendly, without programming know-how
- Uniform diagnostics and maintenance from sensor/actuator via automation system up to the operator system
- Integration of safety-related technology in diagnostics and maintenance with the PCS 7 Maintenance Station
- Minimization of total lifecycle costs
  - Costs for hardware, mounting, wiring, installation, engineering, and commissioning decrease as the level of integration increases
  - Low acquaintance and training requirements as result of uniform system/tool landscape
  - Cost-effective stocking of spare parts through reduction of types and parts

© Siemens AG 2013

Industrial security

Comprehensive protective measures for I&C plants

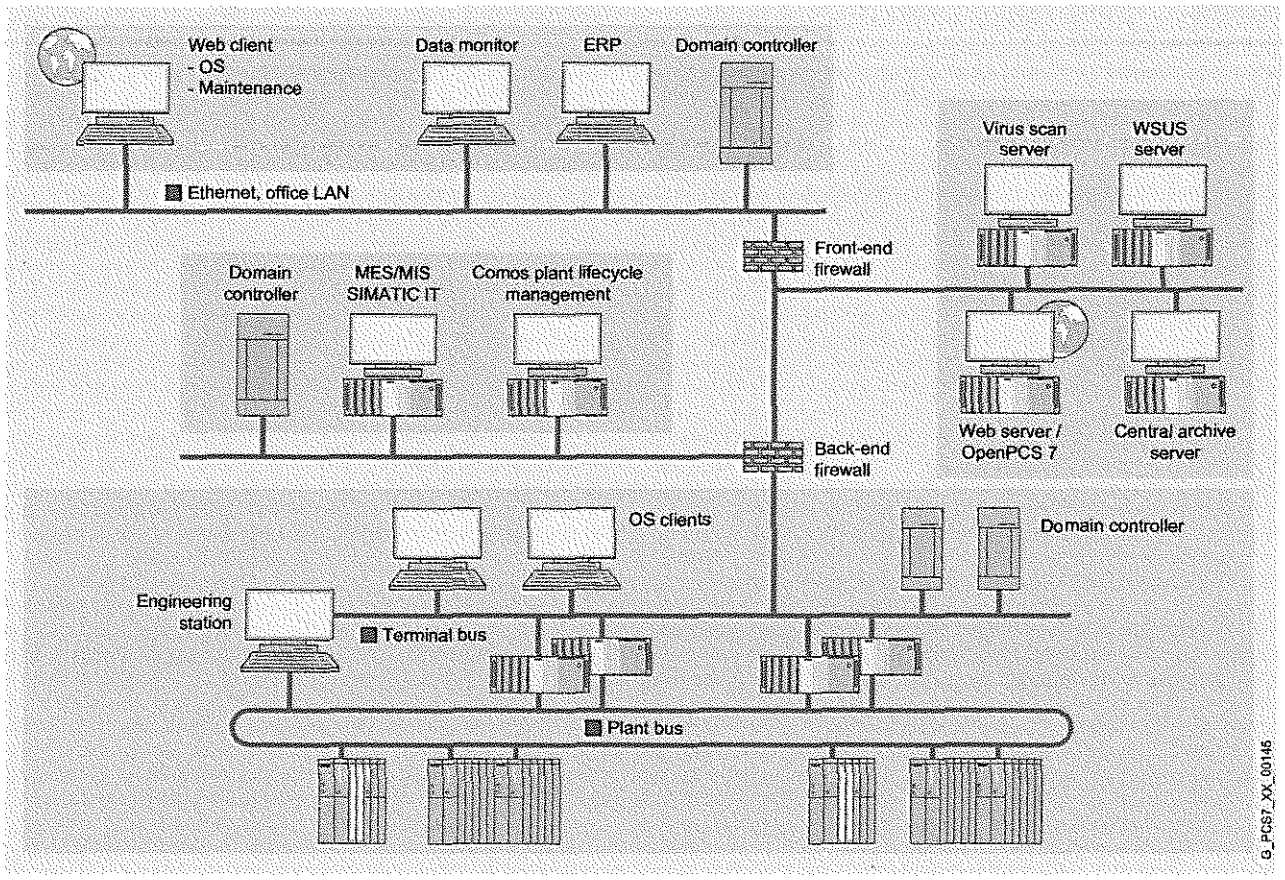

Example of staggered security architecture

Progressive standardization, opening and networking of control systems has been accompanied by an enormous increase in security risks for a process control plant. The potential dangers arising from destructive programs and access by unauthorized personnel range from network overloads or failures, theft of passwords and data, to unauthorized access to process automation. Apart from material damage, specifically targeted sabotage can also have dangerous consequences for personnel and the environment.

SIMATIC PCS 7 security concept

SIMATIC PCS 7 offers comprehensive solutions for safeguarding a process engineering plant that are based on a hierarchical security architecture. What is special about this concept is its holistic approach. It is not restricted to use of individual security methods (e.g. encryption) or devices (e.g. firewalls). Rather its strengths are the interaction of a host of security measures in the plant network.

The SIMATIC PCS 7 security concept comprises advice and recommendations (best practices) on the following topics:

- Design of a network architecture with graded security levels (defense in depth), combined with segmenting of the plant into security cells
- Network management, network segmentation
- Operating plants in Windows domains
- Administration of Microsoft Windows and SIMATIC PCS 7 operator privileges; integration of SIMATIC PCS 7 operator privileges into the Windows administration
- Reliable control of time synchronization
- Management of security patches for Microsoft products
- Use of virus scanners and firewalls
- Support and remote access (VPN, IPSec)

The security aspects and the recommendations for safeguarding the automation plant are described in detail in the manual "PCS 7 & WinCC Security Concept basic document" and the further detailed documents.

System support for the security concept

On the system side, SIMATIC PCS 7 supports the implementation of guidelines and recommendations of the security concept:

- Compatibility with current versions of virus scanners
  - Trend Micro OfficeScan Client-Server Suite
  - McAfee VirusScan Enterprise
  - Symantec Endpoint Protection
- Use of the local Windows firewall
- Automatic setting of security-relevant parameters such as DCOM, registry and Windows firewall already during setup
- User administration and authentication using SIMATIC Logon
- CP 1628 Industrial Ethernet interface with integrated security functions (firewall, VPN)
- Integration of SCALANCE S industrial security modules
- Automation firewall
- Application whitelisting with McAfee Application Control

SCALANCE S industrial security modules

The rugged SCALANCE S602, S612, and S623 industrial security modules can be used, for example, to safeguard the cross-cell data exchange between components of automation and process control systems. They possess security functions such as stateful inspection firewall, port filter, NAT and NAPT address conversion, and DHCP server. In addition to this, S612 and S623 provide authentication and data encryption with Virtual Private Network (VPN) via IPsec tunnel.

Automation firewall

The automation firewall is provided with stateful inspection packet filters, application layer firewall, VPN gateway functionality, URL filtering, Web proxy, virus scan, and intrusion prevention. It thus protects the access point to the production environment, e.g. from the office or intranet/Internet networks. It can be used as follows, depending on plant size:

- Access point firewall for small plants and secure remote access
- Three-homed firewall for small to medium-sized plants with minimal perimeter network
- Front and back firewall for maximum protection in larger plants with extensive perimeter network

Integrated services such as hotline support, replacement service, and Software Update Service enhance the automation firewall even more. Additive services permit customized firewall solutions or support integration of the firewall into customer systems.

For additional information, see:
www.siemens.com/industrial-security

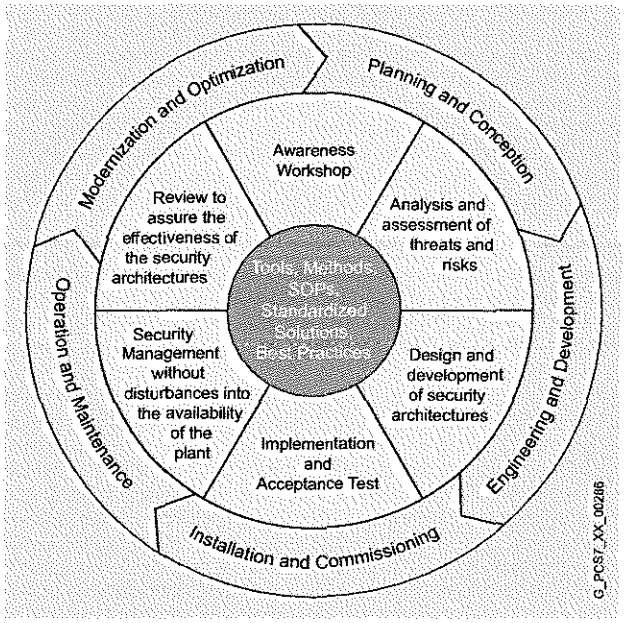

Industrial security services

Application whitelisting

Application whitelisting protection mechanisms guarantee that only trustworthy applications and programs are executed on a station of the SIMATIC PCS 7 process control system. They prevent the execution of illegal software and the modification of installed applications, and thus add to the existing protection against malware (malicious software).

Industrial security services

Siemens Industry Automation not only offers products and systems but also professional services and solutions for protection of industrial plants against the manifold threats to IT security. These industrial security services are not only oriented according to individual phases but are provided for the complete lifecycle of the plant.

Specific consulting concerning secure plant configurations and concepts support customers in the individual planning of their I&C plant.

Security certification

Siemens is the first manufacturer of automation equipment to obtain the Achilles Level 2 certificate for communication ruggedness for the following products:

- SIMATIC S7-400
- CP 443-1 Advanced and CP 1628 communication modules

© Siemens AG 2013

Package units and panel integration

SIMATIC PCS 7 Industry Library (IL)

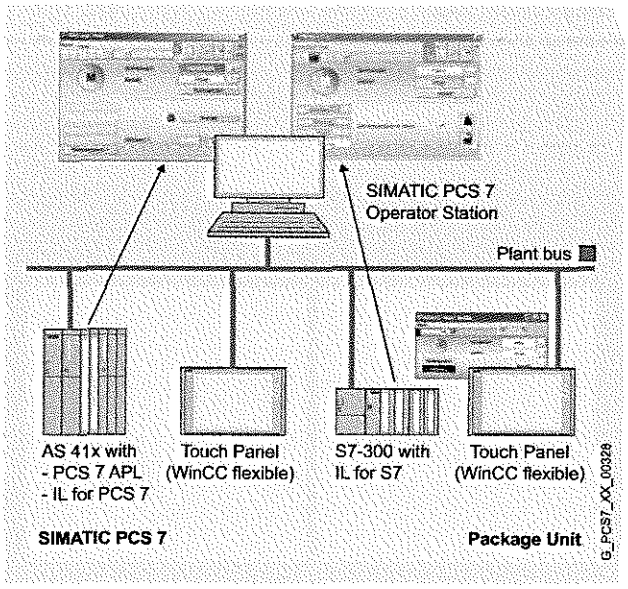

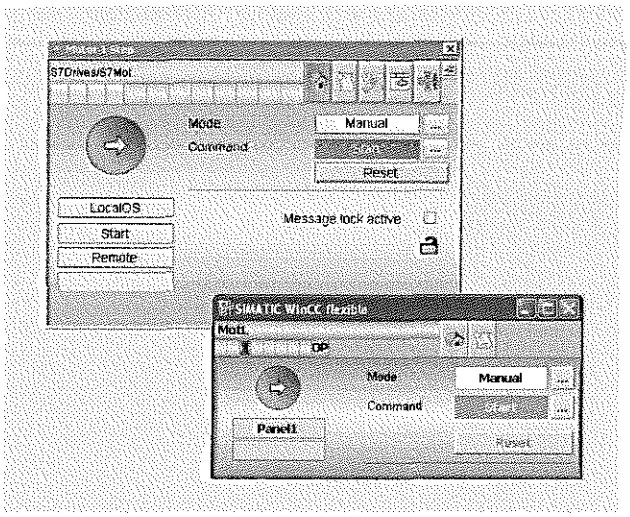

Faceplates of a motor control for operator station (top) and panel (bottom)

The standard functionality for graphic configuration of automation solutions already defined in the SIMATIC PCS 7 Advanced Process Library (APL) can be expanded by specific technological functions using the SIMATIC PCS 7 Industry Library (IL). In addition to individual blocks, faceplates, and symbols which are specifically designed for special I&C tasks in various industrial sectors, the IL also provides sector-specific package units, e.g. for the water/wastewater or building automation sectors. The uniformly styled blocks of IL and APL can be used to create harmonic HMIs which provide a uniform look and feel.

Operator control and monitoring using panels

Operator control and monitoring of automation functions (APL/IL) on a panel are possible using IL interface blocks. Configuration takes place in the CFC by linking to the technological block, e.g. a motor. Taking operating rights and hierarchical operating concepts (multi-control room operation) into consideration, the technological function executed in a SIMATIC PCS 7 automation system or SIMATIC S7-300 controller can then be operated from an operator station and also from a Touch Panel.

S7-300 package units

The IL not only supports the engineering of automation systems and operator stations of the SIMATIC PCS 7 process control system, but also the configuration of package units based on SIMATIC S7-300 controllers. The S7-300 package units can be seamlessly integrated into the process control system using IL blocks and homogeneously embedded in the HMI of the SIMATIC PCS 7 operator station. The function blocks are configured in CFC. The following are available for this:

- Panel interface blocks for IL functions
- Analog monitoring of 8 freely selectable limits
- Analog monitoring with additional binary limit monitoring
- Equipment monitoring for up to 8 units
- Analog measured value monitoring
- Digital measured value monitoring
- 3-point actuator (flaps, motors, valves, etc.)
- PID controller (SP1)
- Operator control blocks
- Valve control
- Motor control (standard motor, with 2 directions of rotation, with variable speed)
- Functions for building automation
- AS-to-AS communication for reading/writing of data

© Siemens AG 2013

Telecontrol

Telecontrol with SIMATIC PCS 7 TeleControl

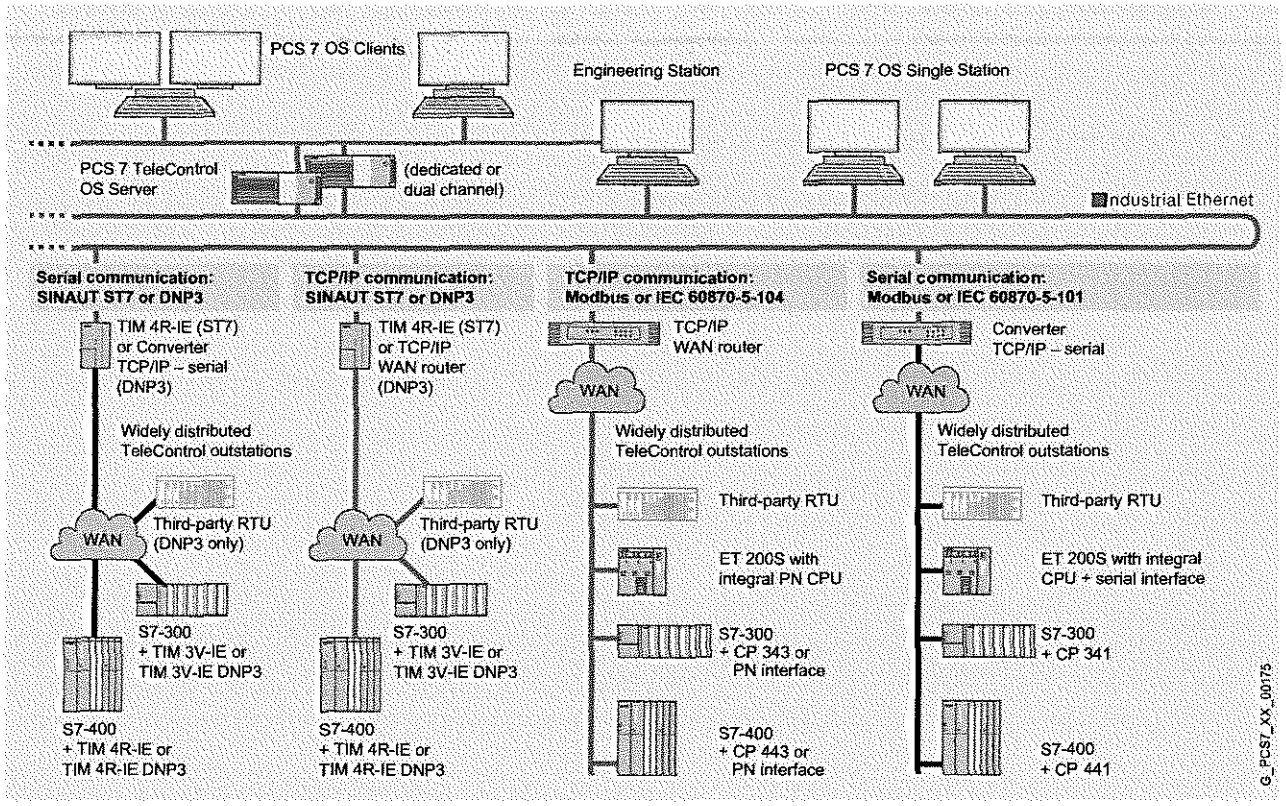

Integration and communication options with SIMATIC PCS 7 TeleControl

Plants often extend over huge areas, especially in the water & wastewater and oil & gas industries. In such cases it is necessary to integrate outstations for monitoring and controlling highly remote units (usually with a small or medium degree of automation) into the control system of the complete plant. This is carried out by means of telecontrol protocols over a WAN (Wide Area Network).

The telecontrol center for the outstations (consisting usually of simpler remote terminal units (RTUs)) can be integrated directly into the process control system using SIMATIC PCS 7 TeleControl.

This results in significant advantages compared to conventional solutions in which central and remote plant areas are configured as separate units and then combined in a higher-level network control system. Benefits include:

- Uniform process control
- Simple and user-friendly data management
- Integrated engineering for central and remote plant units
- Lower service and training costs

The telecontrol center is integrated into the SIMATIC PCS 7 process control in the form of an operator station in single station or server design (also redundant as option). This PCS 7 TeleControl Operator Station is dedicated to telecontrol operation. However, with smaller configurations, it can also control SIMATIC PCS7 automation systems in central plant areas in parallel with telecontrol systems (dual-channel operation).

© Siemens AG 2013

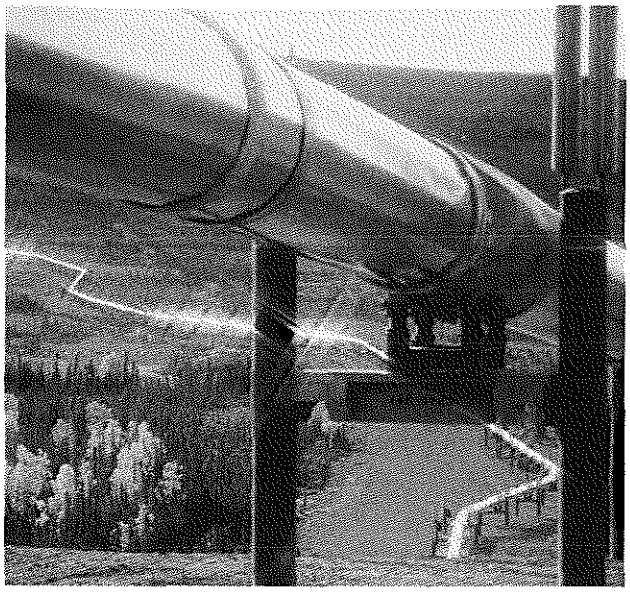

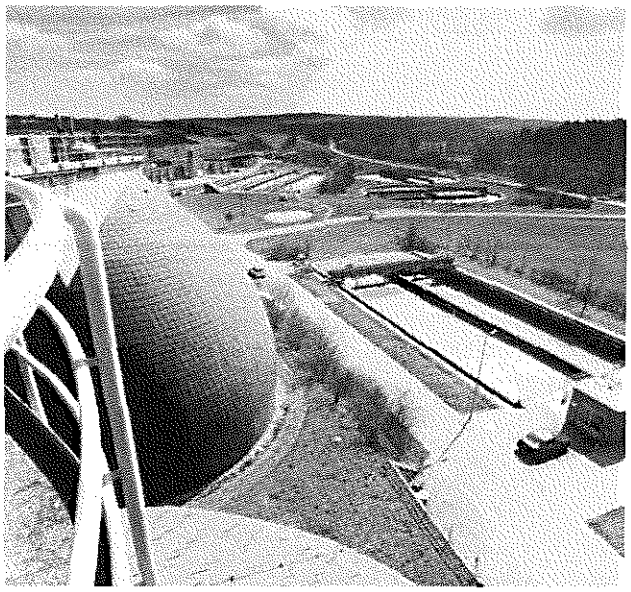

There are no differences between central and remote automation with regard to operating philosophy and alarm response. Data from the RTUs of the telecontrol system can be displayed in one process picture together with data from SIMATIC PCS 7 automation systems.

To enable engineering of the TeleControl Operator Station (single station/server), the functions of the central Engineering Station of the SIMATIC PCS 7 process control system are expanded by DBA technology (DBA) and the object library "SIMATIC PCS 7 TeleControl".

In addition to technological objects for processing and displaying process data, the library also contains diagnostics objects for communication diagnostics and control. These blocks support SIMATIC PCS 7 compliant operator control by means of symbols and faceplates, as well as the hierarchy of SIMATIC PCS 7 fault messages. If necessary, the DBA Type Editor can be used to expand the library project-specifically with new script-based object types.

For additional information, see:
www.siemens.com/simatic-pcs7/telecontrol

	RTU type[1]	RTU category	Possible telecontrol protocols
	controller integrated in SIMATIC ET 200S	**Small** with **30 ... 200 I/Os**[2] for small applications	• Modbus • IEC 60870-5-101, IEC 60870-5-104
	SIMATIC S7-300/S7-300F controller	**Medium** with **100 ... 2 000 I/Os**[2] for medium-sized applications	• SINAUT ST7 • DNP3 • Modbus • IEC 60870-5-101, IEC 60870-5-104
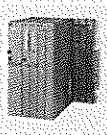	SIMATIC S7-400/S7-400F controller	**Large** with **500 ... 5 000 I/Os**[2] for larger applications requiring higher performance	• SINAUT ST7 • DNP3 • Modbus • IEC 60870-5-101, IEC 60870-5-104
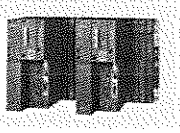	SIMATIC S7-400H/ S7-400FH controller		• DNP3 • IEC 60870-5-101, IEC 60870-5-104

[1] Also in SIPLUS extreme version, e.g. for environments with temperature from -25 °C to +70 °C, condensation, or medial loading
[2] Dependent on CPU size, protocol type and application

© Siemens AG 2013

Switchgear/controlgear automation

Integration of switchgear/controlgear automation in the process industry with SIMATIC PCS 7 PowerControl

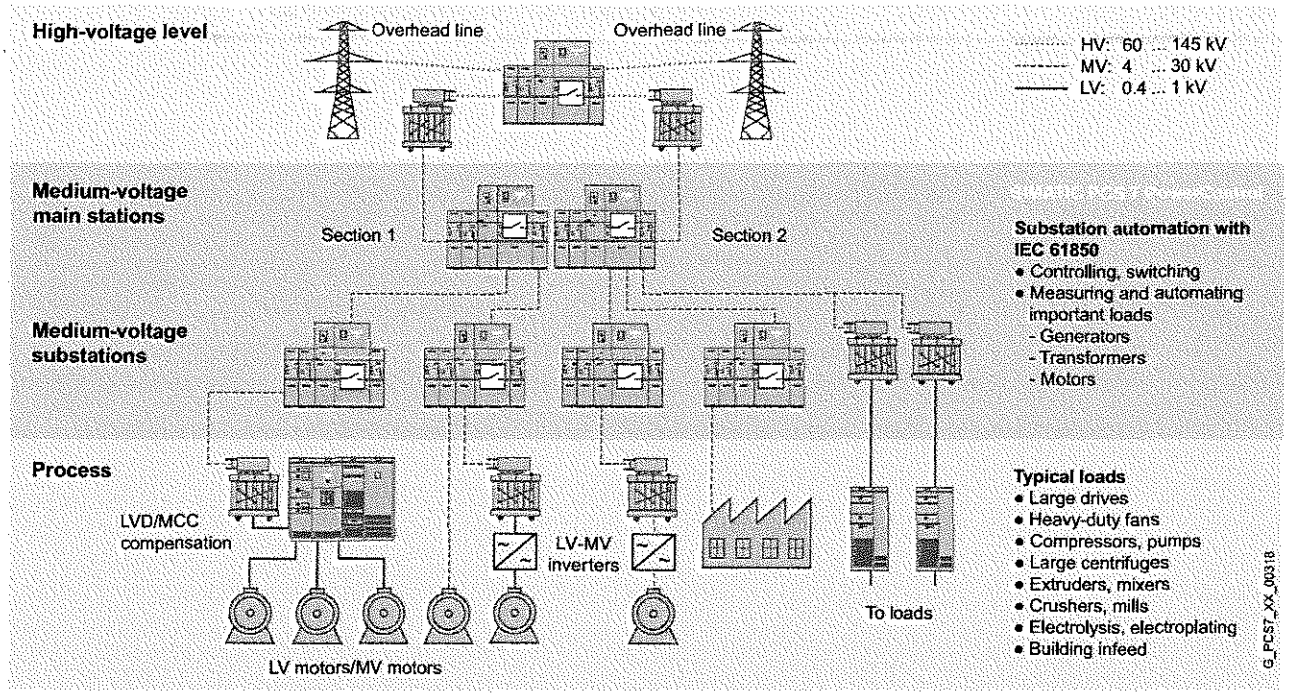

Automation levels in power supply and distribution

Historically, systems for automating a process and systems for automating the power supply to this process were always strictly segregated. With SIMATIC PCS 7 PowerControl, it is now possible to combine process automation and the automation of electrical switchgears for medium voltages ranging from 4 to 30 kV in one control system. This results in a host of benefits that provide huge cost savings over the entire life cycle of the plant, by means, for example, of:

- Simpler plant structures with more transparency in the technological dependencies
- Further increase in the level of integration of the plant
- Uniform process control and further expansion of the operator's task area
- Long-term investment security thanks to globally valid standard IEC 61850
- Rational, integrated engineering and fast commissioning
- Lower administration, service and training costs thanks to uniform holistic view
- Effective energy management (load management, consumption optimization)

These are gaining even more in importance given the increasing decentralization resulting from greater use of renewable energies. One example of this is provided by wind farms.

An electrical switchgear distributes or transforms electrical energy, bundling loads/consumers into load groups. With the help of switching devices, network nodes implemented as busbars connect incoming and outgoing cables known as feeders. When the substation is dimensioned, account is taken of changes to the network topology in the event of faults, and the isolation and grounding of equipment for maintenance work.

Integration of intelligent electronic devices into SIMATIC PCS 7

Electronic devices (IEDs) such as SIPROTEC protective devices or interoperable third-party devices are used for automating switchgears, that is, for protection, control, measuring and monitoring functions in electrical energy transmission and distribution. IEDs can be integrated into the SIMATIC PCS 7 process control system via Ethernet TCP/IP communication with the IEC 61850 transmission protocol for protection and control technology in electrical switchgears.

© Siemens AG 2013

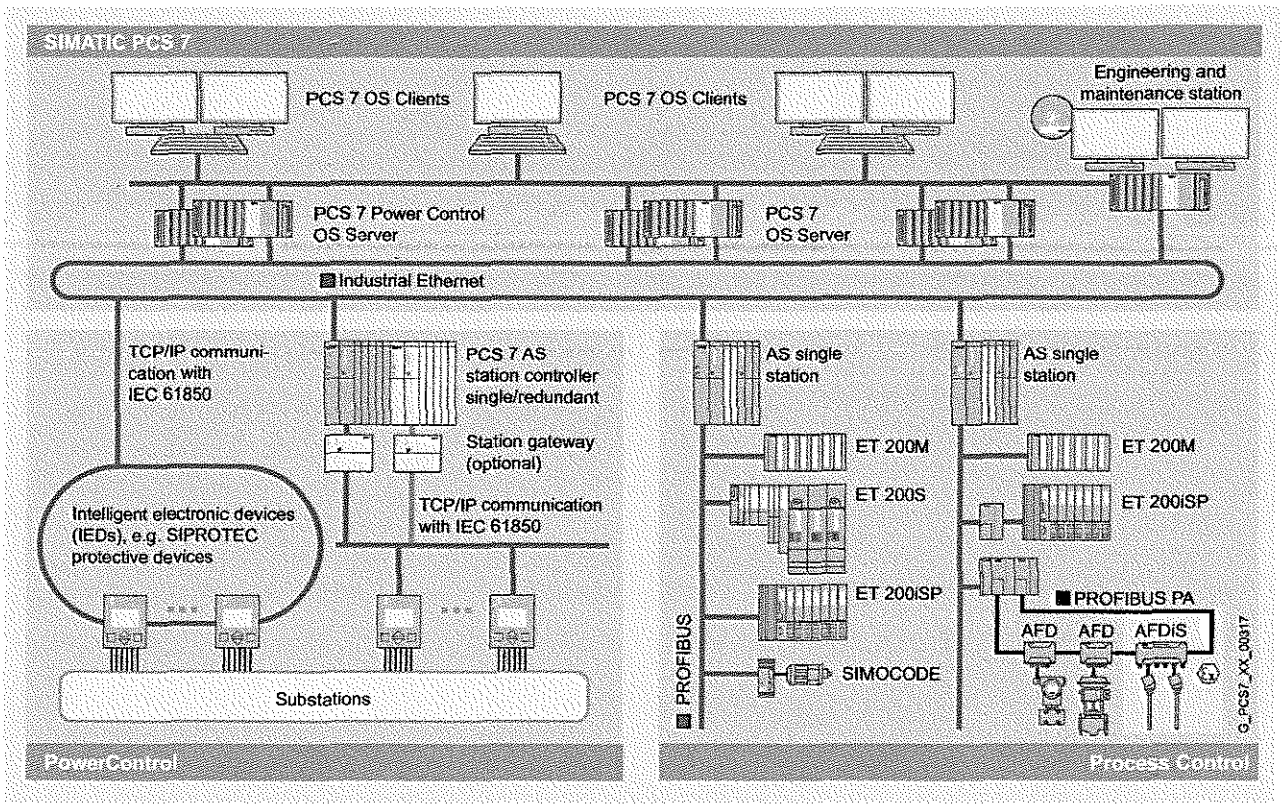

Integration options for automating medium voltage switchgears

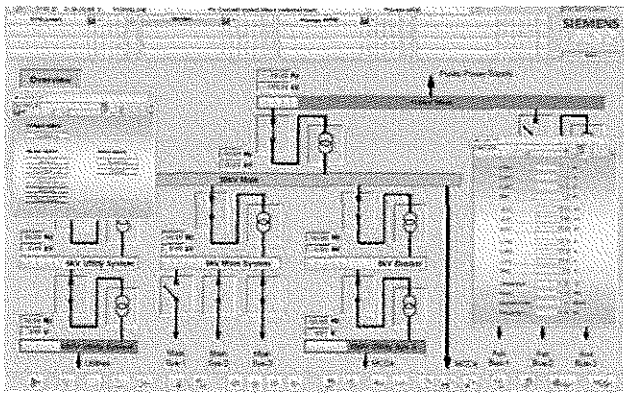

IEDs can be integrated in two ways:

- Direct on the plant bus
- Via a station controller (PCS 7 AS) on the plant bus

IEC 61850 provides the Manufacturing Messaging Specification (MMS) for data exchange between the process control system and IEDs, and Generic Object Oriented Substation Events (GOOSE) for high-speed real-time communication between the IEDs.

Performance features of SIMATIC PCS 7 PowerControl for integrating switchgear automation into

SIMATIC PCS 7 Engineering

- Object library with function blocks, symbols and faceplates
- Object-oriented type-instance concept
- Automatic generation of the objects for the operator station
- Integration of new IEDs by importing their IEC 61850 Device Description (ICD)

SIMATIC PCS 7 process control

- Faceplates for SIPROTEC protective devices in the SIMATIC PCS 7 APL style (look&feel)
- Standardized behavior in the case of alarms, messages, and operator control and monitoring
- Diagnostics functionality for every IED
- Library of technological objects such as motor, generator, feeder

For additional information, see:
www.siemens.com/simatic-pcs7/powercontrol

© Siemens AG 2013

Energy management with SIMATIC PCS 7

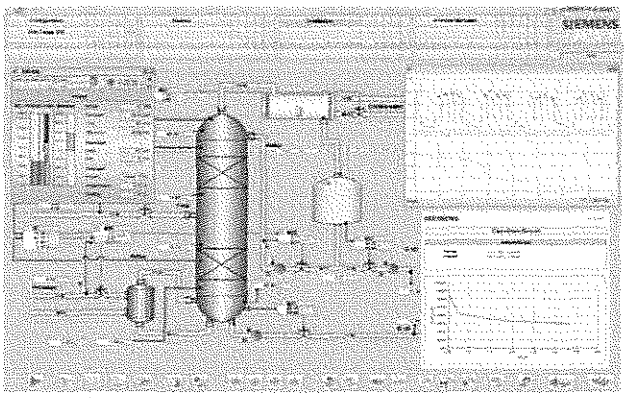

Resources which are becoming scarcer, increasing energy prices, an increased sensitivity for environmental matters, and tighter statutory constraints significantly emphasize the importance of efficient energy management. All aspects concerning the generation, procurement, distribution, and consumption of energy must be considered.

Companies operating in the process industry must be able to plan, monitor and record their energy consumptions, to define and implement possible energy saving measures, and to prove the efficiency through regular evaluation of indicators.

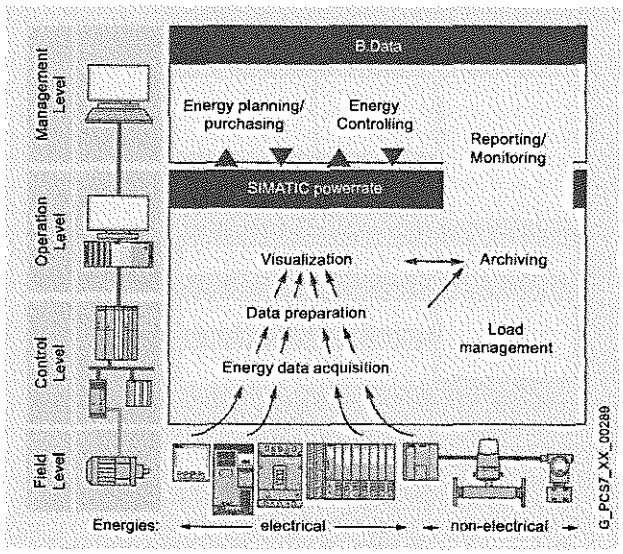

Energy management with SIMATIC PCS 7

Identification and evaluation of energy data

Transparency is a basic prerequisite for improving the energy balance, i.e. the measurement and recording of consumption data and the presentation of the flows of energy and media within the company. It is only possible to define potential savings and the required efforts when the consumption of each type of energy is known.

This is supported in the context of the SIMATIC PCS 7 process control system by:

- Basic power monitoring with SIMATIC PCS 7 standard functionality:
  - Data of process-related energies measured using process instruments, such as steam, cooling media or gas
  - Data provided directly by electric components such as circuit-breakers (SENTRON), frequency converters (SINAMICS), motor starters (ET 200S) etc.
  - Data of other energy consumers measured using power monitoring devices of the SENTRON PAC range
- SIMATIC powerrate for analysis and evaluation of the flows of energy with automatic reporting
  - Recording of energy and performance data from the field using additional function blocks
  - Data preparation, data visualization per faceplate, and data archiving
  - Automatic assignment of energy consumptions/costs to cost centers, units or batches
  - Monitoring of performance limits according to process/user-specific definitions
- B.Data software for optimization of operational energy management with division and transfer to the accounting system in accordance with the causer
  - Company-wide transparency thanks to gap-free energy and material balancing of power generation and consumption plants
  - Generation of key performance indicators (KPIs) for reliable statements on raising the efficiency of energy generation, distribution, and consumption systems
  - Distribution of energy costs and revenues based on causer, and transfer of such to ERP systems (e.g. SAP R/3)
  - Production-based prediction of loads and requirements to improve planning security
  - Support of cost-effective purchasing of energy

© Siemens AG 2013

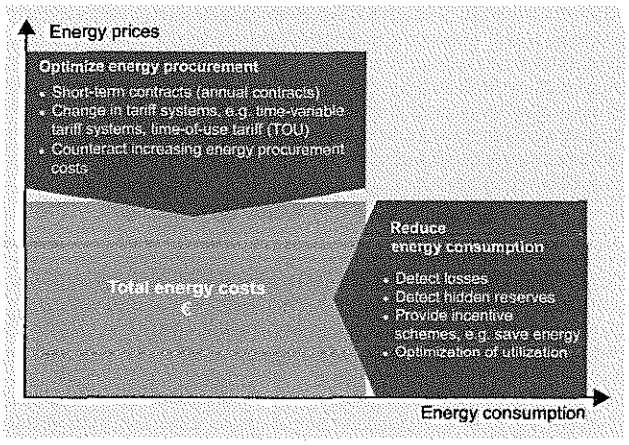

Reduced energy costs

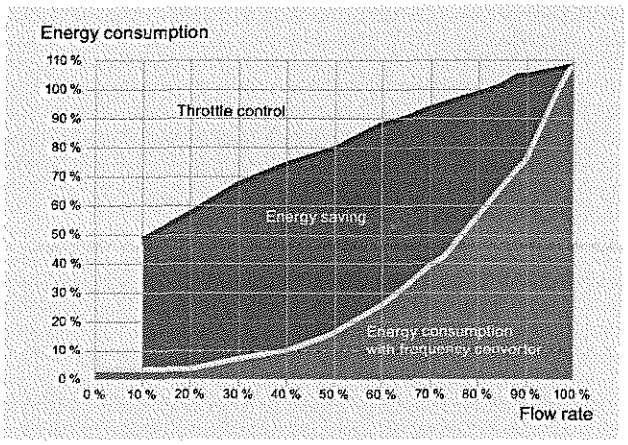

Energy saving potential through frequency converters

Optimization of energy utilization

SIMATIC PCS 7 and SIMATIC powerrate can be used to optimize the energy utilization such that previously unused resources can be accessed, and consumption peaks avoided. SIMATIC powerrate with the integrated load management function permits active monitoring of performance limits. SIMATIC PCS 7 standard blocks use the current consumption to calculate a prediction for the running 15-minute average, and compare this with defined limits. Consumers can be specifically switched off or on, for example, in order to smoothen larger peaks or to observe limits agreed by contract with the energy supplier. In the case of unstable power supplies, loads can also be rapidly disconnected in order to guarantee the operation of critical plant components using the remaining infeed capacity.

Furthermore, the optimization of processes using Advanced Process Control (APC) as well as plant-level asset management with the PCS 7 Maintenance Station provide a significant contribution to energy-efficient plant operation.

Energy saving with innovative technology

The application of low-energy motors or frequency converters is a further large potential for savings, especially with energy-intensive production processes, e.g. in the chemical or pharmaceutical industry.

Energy-saving motors
Energy-efficient motors have a power loss reduced by up to 42%. Since the share of energy costs in the total costs of a motor over its complete lifecycle is approximately 98%, enormous cost savings can be achieved for new plants or when modernizing existing plants.

Frequency converters with braking energy recovery
Frequency converters make it possible for the equipment in plants, such as pumps, fans or compressors, to always operate within the optimum working range. Energy savings of up to 50% can then be achieved compared to conventional control procedures.

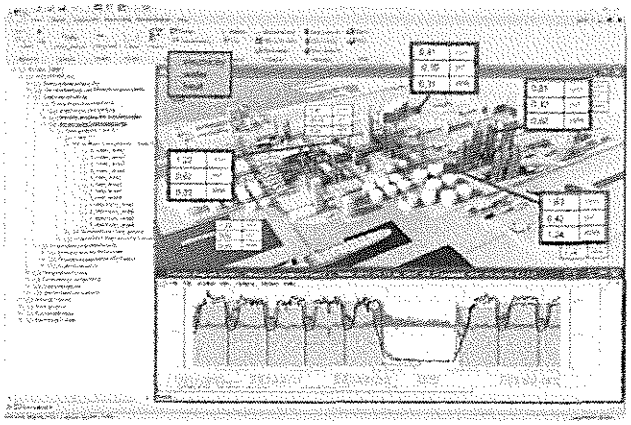

B.Data software for optimizing operational energy management

For additional information, see:
www.siemens.com/simatic-pcs7/energy-management

© Siemens AG 2013

Optimization with Advanced Process Control

With complex processes, control concepts based on PID controllers often reach their limits quickly. Advanced Process Control (APC) functions are integrated in the SIMATIC PCS 7 process control system and provide significantly more options. The application of these advanced control functions permits the following:

- Drastic reduction of undesirable variations in critical process variables
- Noticeable reduction in use of raw materials and consumption of energy
- Increase in throughput and product quality
- Reduction in demands placed on operating personnel

Integrated Advanced Process Control functions

In addition to numerous basic control functions, e.g. PID control, cascade control, split range control and ratio control, the I&C libraries of SIMATIC PCS 7 provide function blocks and templates at no extra cost for the advanced control functions described below.

Using these model solutions already included in the standard, complex APC applications can be implemented simply and cost-effectively for small and medium-sized plants.

Override control
With override control, the outputs of two or more controllers are connected to a common final controlling element. The decision concerning which controller actually has access to the final controlling element is made depending on the evaluation of the current process state.

- Two or more controllers share a final controlling element
- Decision for the active controller based on:
  - Measurable output variables, e.g. one of the controlled variables
  - Manipulated variables of the controllers

Gain scheduling
Gain scheduling enables infinite adjustment of the controller settings in non-linear processes depending on three operating points.

Linear interpolation effects soft, bumpless transitions between the operating points so that the parameters can be infinitely modified dependent on the course of the measured variable X.

- Suitable for non-linear processes
- Three complete parameter sets for three operating points

Dynamic feedforward control
Feed-forward control can compensate a strong, measurable interference in advance so that the control is limited to model uncertainties and non-measurable interferences.

- Compensation of strong, measurable interferences
- Eliminating faults before the appearance of negative effects

Monitoring of the control performance
The ConPerMon block determines the control quality of the PID controller block. Depending on the deviation from the comparison value, e.g. the control quality during commissioning, it triggers warnings or alarms which can be combined clearly in OS displays for a plant or unit. In this way, problems can be detected, analyzed and specifically corrected at an early stage.

- Online monitoring of the control performance
- Identification of control loops according to the criteria:
  - Maximum urgency for optimization
  - Imminent fault
- Configurable alarm limits for standard deviation
- Graphic evaluation

© Siemens AG 2013

PID controller optimization
A model of the process is initially generated using the PID Tuner integrated in the engineering system. Based on this, the most favorable controller settings can be determined, while differentiating between the optimum response to disturbance variable changes or setpoint changes.

- Optimization of PID control loops
- Can be used for standard PID controllers and blocks from user-specific libraries
- Simulation of closed control loops

Smith Predictor
The Smith predictor can significantly improve the control quality of processes with long and relatively constant dead times. The dead time component is eliminated using a process model running parallel to the actual process. The controller can then be designed for a process free of dead time, and set more effectively.

- Can be used on processes with long, known and relatively constant dead times:
  - Process model runs parallel to the actual process
  - Feedback of virtual controlled variable free of dead time
  - Feedback of deviation between the measured actual value and the virtual value with dead time
- Draft PI(D) controller:
  - Based on component of process model that is free of dead time
  - Allows significantly more precise controller setting

Model-based predictive multi-variable control
The model-based predictive multi-variable controller (MPC) separately analyses the behavior of up to four interdependent variables for complex processes over a longer period. The MPC then uses the parameter matrix calculated using the results for optimized control of these variables. Adverse interactions which occur with separate control of the interdependent variables are thus eliminated.

- Most powerful APC function
- Scalable MPC applications:
  - Internal ("lean") MPC: up to 4 x 4
  - External "full-blown" MPC: more than 4 x 4 (add-on)
- "Lean" und "easy to use"; requires neither communication monitoring nor backup strategies
- Application examples:
  - 2 x 2 application: two-material distillation
  - 3 x 2 application: steel bleaching process
  - 3 x 3 application: loop-type bubble column, vaporizer
  - 3 x 4 application: cement mill
  - 4 x 4 application: three-material distillation, oven with 4 burners

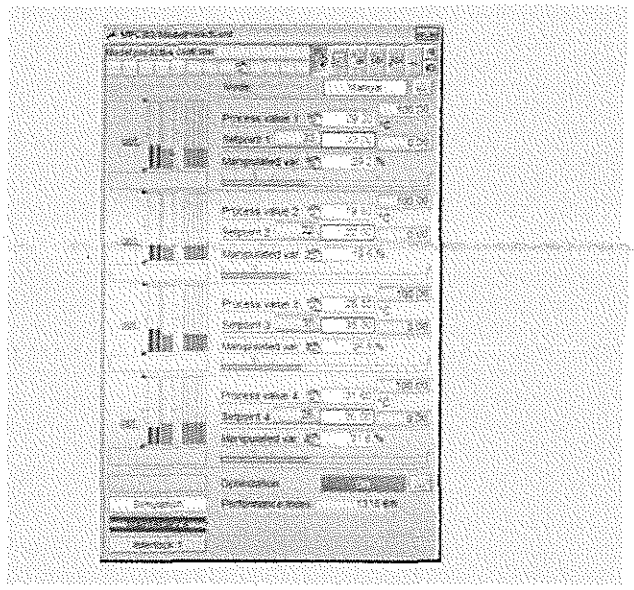

Faceplate for predictive multi-variable controller

In a tolerance range specified instead of the precise setpoint, the integral static operating point optimization can calculate the economically optimal operating point. Prediction mode predicts future process behavior within the entire prediction horizon, assuming the current values of the manipulated variables are frozen.

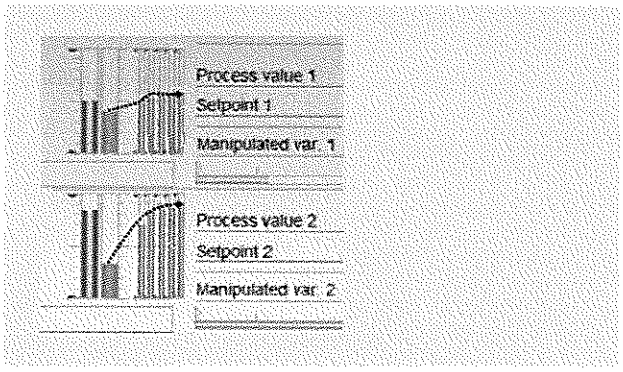

Graphical representation of the process behavior prediction

Advanced Process Control with SIMATIC PCS 7 add-ons

Add-ons which can be seamlessly integrated into the process control system expand the range of advanced control functions for SIMATIC PCS 7, e.g. FuzzyControl++, INCA Sensor, INCA MPC or ADCO.

For additional information on Advanced Process Control, see:
www.siemens.com/simatic-pcs7/apc

© Siemens AG 2013

Simulation and training systems

Simulation and virtual commissioning with SIMIT

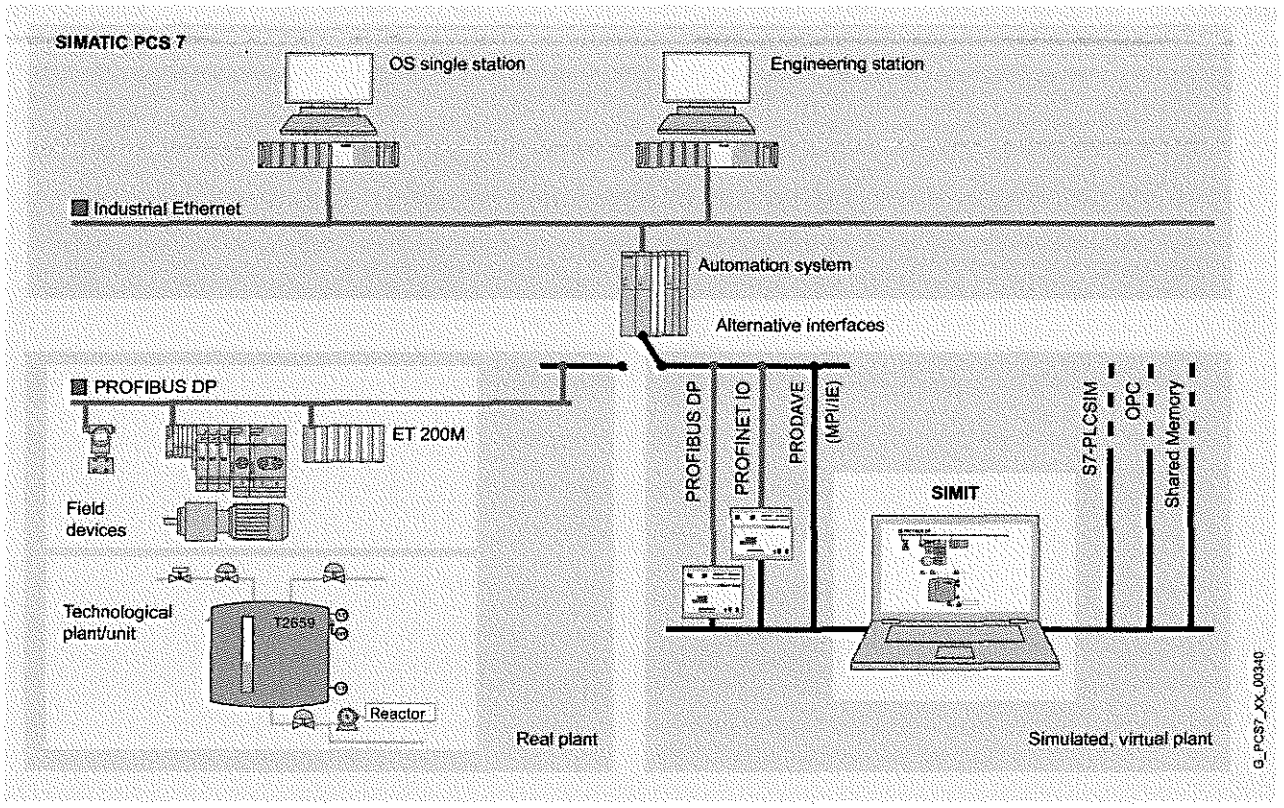

Application and integration options of SIMIT

In the process industry, automation projects are characterized by tight budgets, increasing complexity, and a tightly organized implementation timeframe. The challenges are therefore the planning, installation, and commissioning of I&C plants within the shortest possible time, but at the same time satisfying the increasing quality and cost demands. The shortening of commissioning times as a result of simulation of the I&C and technological functionalities using SIMIT can make a decisive contribution toward achieving the planned efficiency and productivity of new plants, expansions, and modernizations as rapidly as possible.

SIMIT permits testing and commissioning of the plant-specific user software on a partially virtual plant. To achieve this, the response of the field technology as well as the technological plant/unit can be simulated in SIMIT. Either a real or virtual automation system is used for the control.

Many efficient tests for detection and elimination of potential faults can already be carried out before the real plant is even available, e.g. application of correct identifications, testing of interconnection or interlocking logic. In this manner it is possible to optimize the quality of the configuration process without a risk for the real plant.

SIMIT can be used on up-to-date notebooks or desktop computers with Windows XP Professional or Windows 7 Professional/Ultimate. It can be integrated and flexibly used in SIMATIC PCS 7 via open interfaces. It is possible to link further simulation models to SIMIT via standardized interfaces such as OPC and Shared Memory.

© Siemens AG 2013

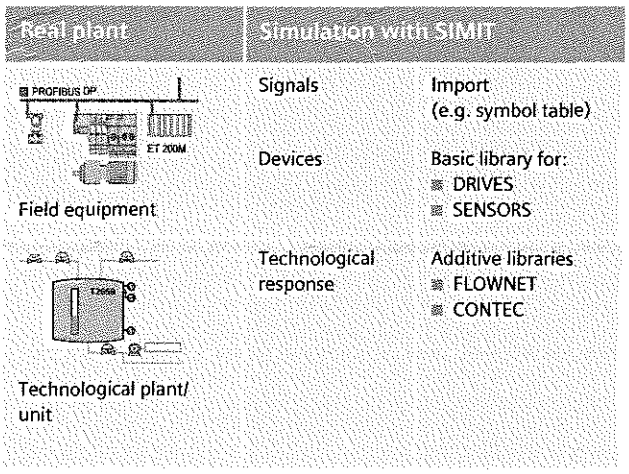

Abstraction levels of the simulation

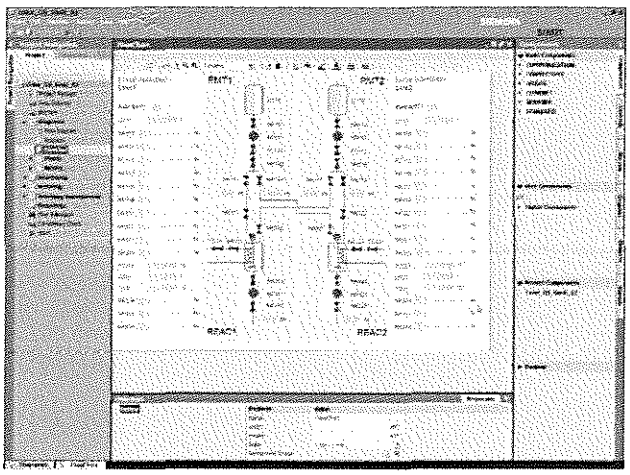

SIMIT Graphical User Interface (GUI)

SIMIT can be connected to SIMATIC PCS 7 automation systems via PROFIBUS DP or PROFINET IO. Interface modules simulate the devices on the PROFIBUS DP/ PROFINET IO. As an alternative, additional connections are possible e.g. with:

- Specific applications such as S7-PLCSIM (AS simulation) or PRODAVE (MPI/IE)
- OPC data sources
- Shared Memory

Modeling of the plant based on components and signal flows is carried out on the SIMIT GUI. Basic libraries which can be expanded are available. Special simulation expertise is unnecessary.

Efficient simulation with SIMIT is based on abstraction at three different levels: Signals, devices (e.g. drives and sensors), and technological response.

The signals can be created simply by importing the symbol table. Files of the import/export wizard and simulation templates can be used to simulate the devices. Additive libraries support simulation of the technological response. An example of this is the FLOWNET library with which the dynamic responses of pressures, flows, and temperature distributions of water in pipeline networks can be simulated rapidly and simply.

In addition, a CONTEC library is available for simulation of mixed consignment conveyor technology plants.

SIMIT services

Experienced specialists in the plant simulation sector with profound knowledge of SIMIT provide comprehensive consulting, training, and support for customized plant modeling.

Arguments supporting the use of SIMIT

- High quality thanks to early detection and elimination of faults in the I&C project
- Virtual commissioning shortens project commissioning times and reduces project costs
- No simulation-specific programming required in the automation project

© Siemens AG 2013

Interfacing to IT systems

Evaluating and managing process data with OpenPCS 7

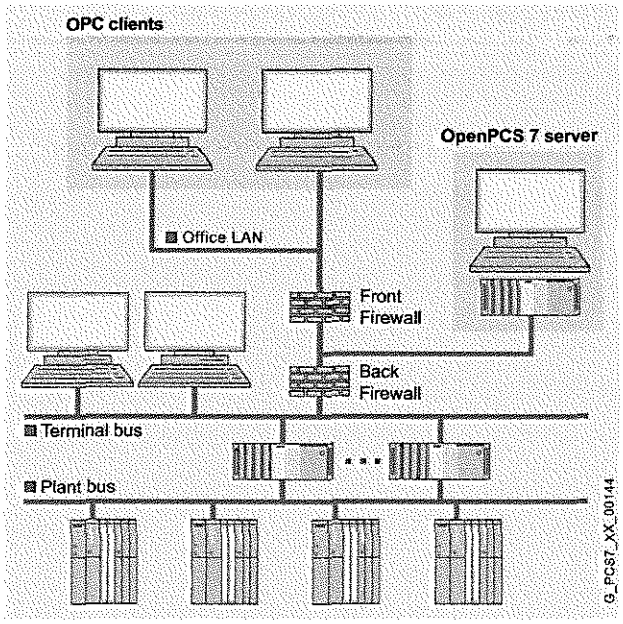

OpenPCS 7 server for data exchange via OPC

Systems for production planning, process data evaluation and management (OPC clients) that are at a higher level than the process control system can access SIMATIC PCS 7 process data by means of an OpenPCS 7 server.

The OpenPCS 7 server collects data for the OPC clients. Depending on the system configuration, these data may be distributed across different SIMATIC PCS 7 stations (OS server, archive server). It covers the distribution of data with respect to

- Period (OS1 / OS2 / ... /archive server)
- Location (OS1 / OS2 / ...)
- Redundancy (OS1 master / OS1 standby...)

The OpenPCS 7 interface is based on the OPC specifications (Openness, Productivity, Collaboration) that mainly make use of Microsoft's DCOM technology (Distributed Component Object Model) for communication between the applications. It supports the following standardized access options:

OPC DA (data access server)

For read and write access to process values according to OPC specification OPC DA V2.05a and V3.0.

As an OPC DA server, the OpenPCS 7 server provides other applications with current data from the OS data management. The OPC client can log itself on to ongoing changes or also write values.

OPC HDA (historical data access server)

For read-only access to archived process values according to OPC Specification OPC HDA V1.2

As an OPC HDA server, the OpenPCS 7 server provides other applications with historical data from the OS archive system. The OPC client, e.g. a reporting tool, can specifically request the required data by defining the start and end of a time interval. Numerous functions, e.g. variance, mean value or integral, already permit preprocessing by the HDA server and thus contribute toward reduction of the communications load.

OPC A&E (alarm & events server)

For read-only access to messages, alarms and events according to OPC Specification OPC A&E V1.1

As an OPC A&E server, the OpenPCS 7 server passes on OS messages together with all accompanying process values to the subscribers at the production and corporate management levels. They can of course also be acknowledged there. Filter mechanisms and subscriptions ensure that only selected, modified data are transmitted.

OPC "H" A&E (Historical Alarm & Events Server)

For read access to archived alarms and messages

Thanks to a Siemens extension of the OPC standard interface, the OpenPCS 7 server is able to transmit historic alarms and messages from the archive to subscribers in the production control and corporate control level.

OLE-DB

Simple, standardized direct access to the archive data in the Microsoft SQL server database of the operator system is possible with the OLE-DB. Through this, all OS archive data are accessible with the accompanying process values, message texts and user texts.

© Siemens AG 2013

Integration and synchronization of all business processes with SIMATIC IT

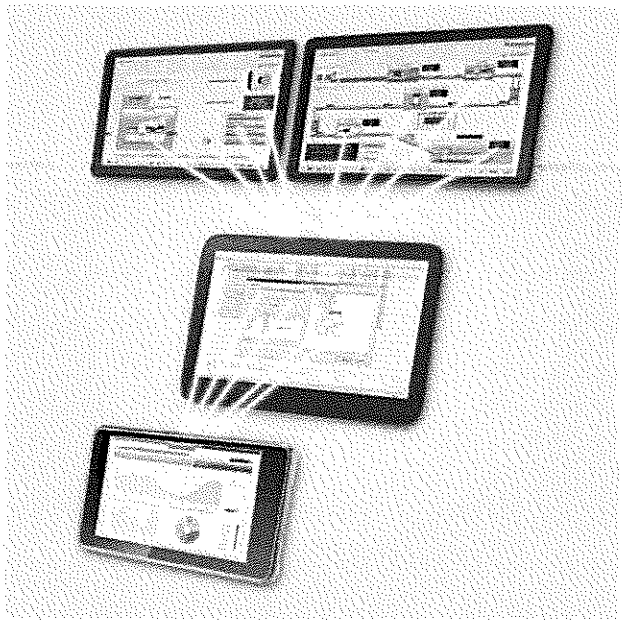

The competitiveness of a company depends on a quick response to market requirements and optimization of the supply chain. At the interface between production and management, Manufacturing Execution Systems (MES) ensure uniform optimization of corporate processes - and therefore greater efficiency, integrated transparency and consistent quality.

With SIMATIC IT, Siemens has one of the most powerful and flexible MES systems on the market. As a component of Totally Integrated Automation, SIMATIC IT is based on consistent standardization of interfaces and clear ISA-95-compatible structuring and works homogeneously will all commonly available ERP and process control systems. Modeling of the entire product manufacturing know-how, precise definition of the operating processes, and real-time data acquisition from the ERP and the production level enable SIMATIC IT to control operating processes more effectively, to minimize downtimes, production waste and reworking, and to optimize stockholding.

With three SIMATIC IT suites, independent components, and SIMATIC IT libraries (reusable MES applications), SIMATIC IT can be quickly and flexibly aligned to the specific requirements of companies in different sectors of the process and life sciences industry.

As well as normal technical support, the range of services also encompasses predictive and preventive service and support. It supports the customer in optimizing the availability of IT resources in the production plant, whether by automatic management of software updates or by predicting potential server problems.

SIMATIC IT Suites

SIMATIC IT Production Suite
is a manufacturing execution system in accordance with ISA-95 that combines ERP systems with process control technology, and visualizes production performance in real time at the corporate management level

SIMATIC IT R&D Suite
combines research and development with the production plant for system-wide optimization of research and development processes, and for reducing product launch times.

SIMATIC IT Intelligence Suite
analyzes the production data acquired in real time in combination with the business data, and thus derives improvement measures.

SIMATIC IT Components

The following SIMATIC IT components provide MES basic functionality in accordance with ISA-95 for specific task areas such as order management, materials management, message management, personnel management or report management:

- SIMATIC IT Product Definition Manager
- SIMATIC IT Production Order Manager
- SIMATIC IT Material Manager
- SIMATIC IT Personnel Manager
- SIMATIC IT Messaging Manager
- SIMATIC IT Data Integration Service
- SIMATIC IT Client Application Builder (CAB)
- SIMATIC IT Report Manager

Other SIMATIC IT components can be used in stand-alone mode and can also be combined with other MES functionalities:

- SIMATIC IT Historian - PIMS (Plant Information Management System)
- SIMATIC IT Unilab - LIMS (Lab Information Management System)
- SIMATIC IT Interspec - Product specification management
- SIMATIC IT Unicam - Solution for manufacturers of electronic components

SIMATIC IT Libraries
Sector-specific SIMATIC IT function packages

SIMATIC IT also offers specific function packages, including packages for life sciences and various sectors of the process industry. Pre-configured best-practice applications in SIMATIC IT libraries already cover 80% of sector-specific customer requirements as standard.

© Siemens AG 2013

Controller integration with PCS 7/OPEN OS

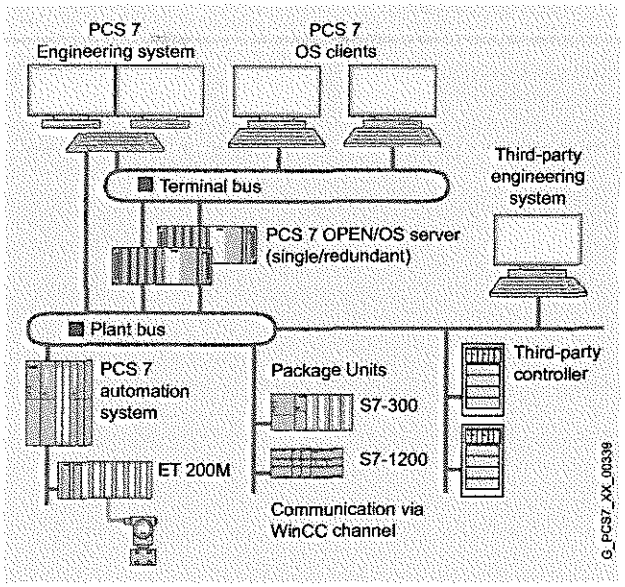

Example of connection of third-party controllers and package units to PCS 7/OPEN OS

As a result of developments over many years, I&C plants frequently have heterogeneous structures in which system components from different manufacturers are combined. During plant modernizations, owners endeavor to increase the efficiency of process control by simplifying the HMI level. In the case of plant expansions where control desks are merged or existing plants are migrated step-by-step, the challenge is to integrate different types of controller in one HMI system.

The SIMATIC PCS 7 operator system can be expanded by PCS 7/OPEN OS for such purposes. It can be used to integrate the following controllers into the process management:

- Third-party controllers (DCS)
- PLCs from Siemens and other manufacturers
- Package units

Depending on the technical situation of the controller to be integrated, connection to the PCS 7/OPEN OS operator station (single station / server / redundant pair of servers) is possible via OPC (OPC DA and OPC A&E) or the existing WinCC channels (e.g. S7 channel or Modbus TCP channel). In the case of OPC communication, the OPC server can be executed on separate hardware or together with the OPC client on the PCS 7/OPEN OS operator station.

The existing engineering system of the controller can be used further to configure the automation functions.

The basis for OS engineering with the PCS 7 engineering system is the Toolset Database Automation (DBA) of PCS 7/OPEN OS. It is then possible to rapidly and simply create OS objects in SIMATIC PCS 7 design for the controller to be integrated. Manual inputs are limited to organization of the project, the creation of static display elements, archive definition, user management, and customized adaptations.

DBA functions

- Generating the display hierarchy
- Automatic creation of displays with icons and faceplates in the hierarchy tree
- Automatic creation of the variables function in the operator station
- Automatic creation of messages
- Assignment of message priorities
- Definition of the process variables to be archived
- Creation of trends
- Export/import for mass data processing
- Type editor for creation of function block images of the existing controller
  - Creation of data structures (structure types)
  - Import/export and documentation of types
  - Creation of type from instance
  - Integration of type into another type

Further relevant PCS 7/OPEN OS functions

- PH synchronization: alignment of plant hierarchy with existing PCS 7 project
- Multi-project engineering: division into several DBA projects, e.g. system-granular
- Online scripting: creation of scripts for supplementary functions, for execution during runtime

Handling of package units

Package units can be created once in PCS 7/OPEN OS and supplied as an OS typical on CD or per download. On site, the configuration engineer imports this typical and generates instances from it according to the number of units. The package units can subsequently be visualized in the SIMATIC PCS 7 process displays.

© Siemens AG 2013

Migration of own and third-party systems

An investment for the future

Migration strategy

Globalization and the intensified competition that accompanies it are forcing companies to continuously increase productivity and shorten product launch times. Existing systems and plants have to be repeatedly expanded and modernized to ensure that companies can also satisfy tomorrow's market requirements. However, since the installed basis of hardware, application software and know-how of the operating and maintenance engineers represents an enormous value, the safeguarding of investments for companies operating the plants is always assigned a high priority during all modernization plans.

Experience has shown that the success of a migration process greatly depends on a technical solution optimally matched to customer requirements and the respective plant. The following fundamental aspects apply:

- Minimization of the financial and technical risks
- Long-term safeguarding of investments already made
- The different lifecycles of the system components must also be considered, e.g.:
  - 5 years for PC-based workstations
  - 15 years for controllers
  - 25 years for input/ output components and wiring

Added value due to migration

The reasons for modernization of the process control technology are just as diverse as the objectives to be achieved by using a modern process control system such as SIMATIC PCS 7:

- Guaranteeing automation functionality in aging components
- Optimization of stocking of spare parts
- More flexible production with higher capacities
- Increased system performance and process transparency
- Increase in product quality and saving of resources by using modern control strategies
- Reduced engineering requirements
- Simpler process control with reduced demands on operators
- Improved system reliability thanks to more comprehensive diagnostics and plant asset management
- Powerful interfaces and plant networks with high potential for protection against IT security threats

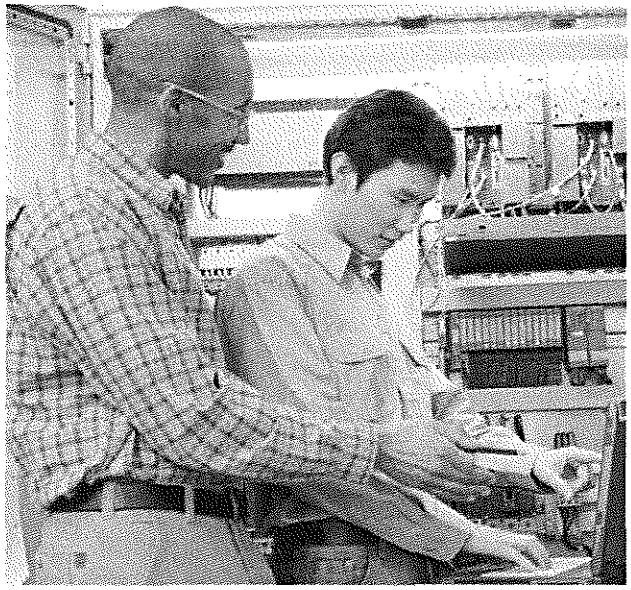

Siemens sees its task in the case of migration to be not simply the complete replacement of an existing system, but also, in close collaboration with customers and their system integrators, the production of an individual, future-oriented solution based on the state-of-the-art SIMATIC PCS 7 process control system – always under the directives:

- Step-by-step system innovation
- Adaptable to the special conditions of the plant
- Flexible according to production demands

The first and most important task of an optimal migration concept for a plant is to analyze the starting point, and from this to derive the goals of the modernization.

With very old systems, complete replacement by the new process control system is usually the preferred method. However, it is often possible to continue using components such as controllers or I/O modules if they are still supported by the supplier and if sufficient spare parts are still available. By integrating components that are worth keeping into the migration concept, significant investment savings can be achieved and conversion times shortened.

© Siemens AG 2013

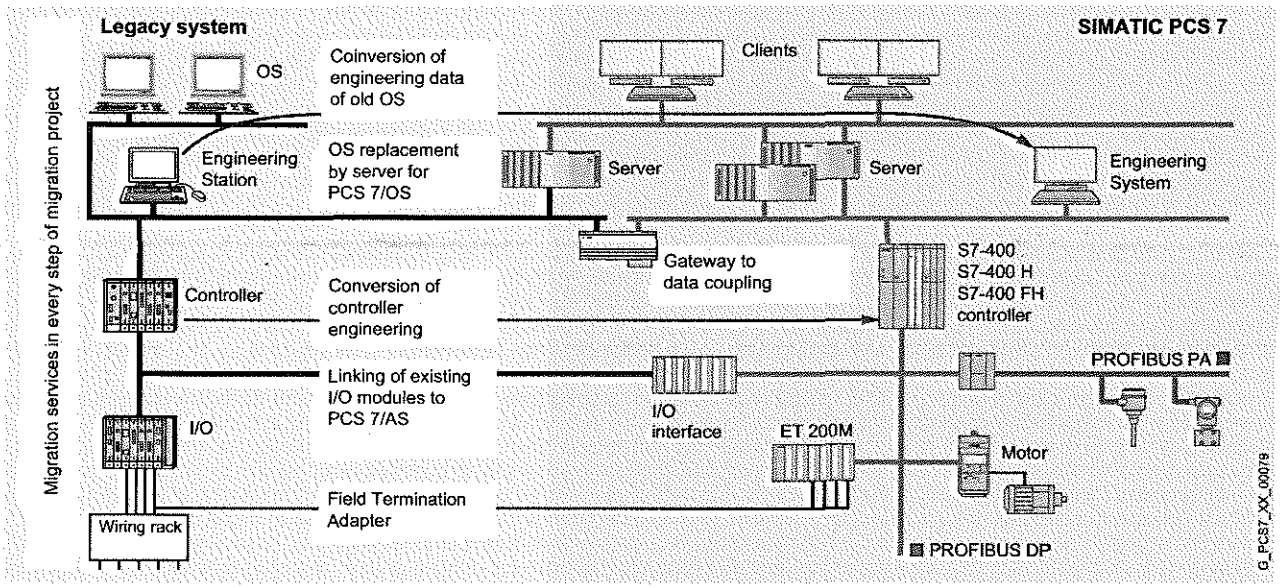

Step-by-step migration with the right products and services

Even if the hardware is largely obsolete, the available controller engineering can still represent significant value. The entire process automation know-how, often optimized over a period of years, is concentrated here. Intelligent tools help to analyze this data, and in certain circumstances, they can significantly reduce costs for re-engineering the new system thanks to functional implementation (typicals).

Experts with experience of migration

In view of the complexity of many migration projects, decisive prerequisites for migration success include the analysis and design of the correct procedure, including a realistic assessment of the opportunities and risks. The migration experts at Siemens have already acquired relevant experience in migrating the most diverse systems. This know-how is concentrated in Migration Support Centers.

If desired, Siemens works closely with the customer's system integrators when implementing migration projects, for they have the know-how gained over many years, coupled with precise knowledge of the plant and the customer's requirements.

For additional information, see:
www.siemens.com/simatic-pcs7/migration

Migration spectrum

Siemens recognized the significance of migration for process automation at an early stage, and has for many years offered a wide range of innovative migration products and solutions for its globally proven systems, such as APACS+ or TELEPERM M.

Migration of old systems from other manufacturers such as ABB, Honeywell, Emerson or Invensys has since become firmly established. Here too, various products and solutions support the step-by-step transition to SIMATIC PCS 7. Increasingly, the universal, OPC-linked SIMATIC PCS 7/Open OS is used here. Additional solutions supplement the portfolio, including those for communication between old and new systems or for fast switchover of field wiring in migration projects, e.g. specific gateways, connectors, cables, and field termination assemblies (FTA).

With the future-oriented SIMATIC PCS 7 process control system, innovative migration solutions and services, many years of expertise in process automation and migration, as well as continuous worldwide servicing, Siemens demonstrates its expertise and offers the security of a reliable partner.

© Siemens AG 2013

Services

Global service & support

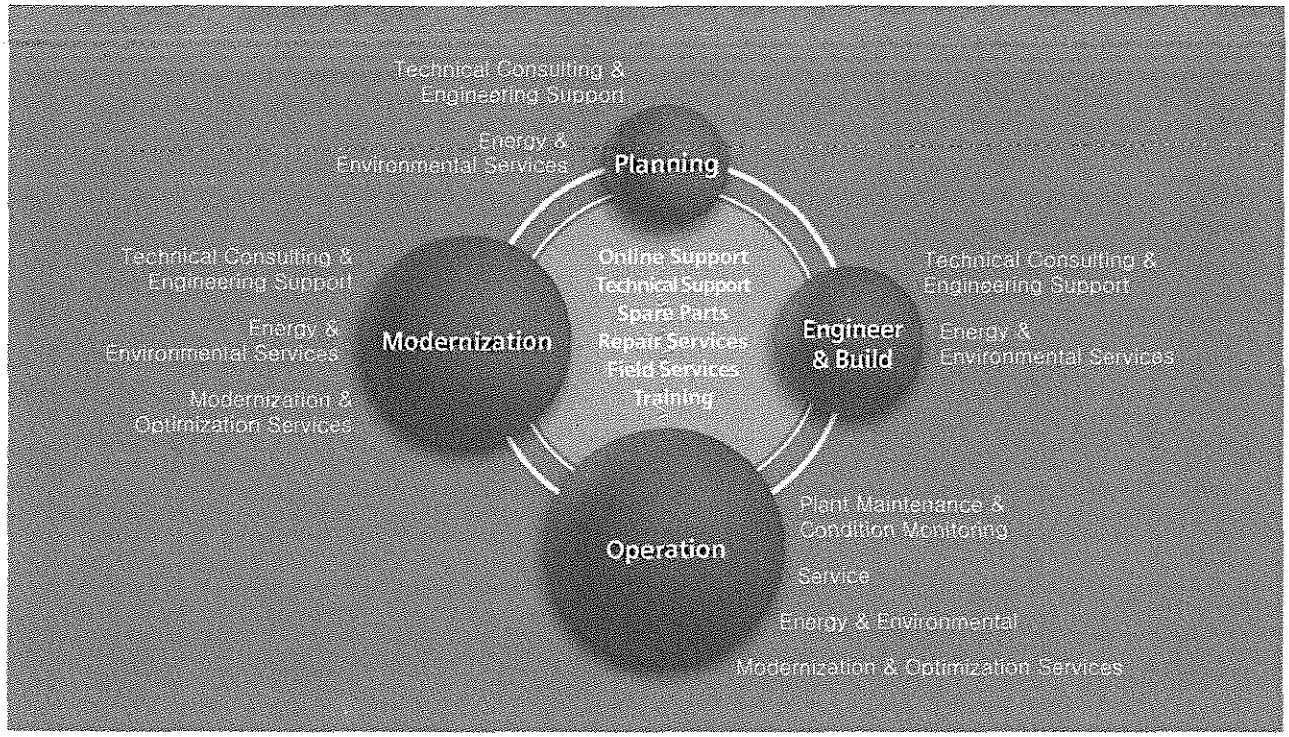

Whether in the production or processing industry, the services provided for the industry have become a decisive factor toward successful competitiveness when considering the high cost pressures, increasing energy costs, and increasingly strict environmental regulations. Siemens supports its customers worldwide with appropriate product, system, and application services for the complete lifecycle of a plant. Whether planning and development, operation or modernization are concerned, customers profit from the services thanks to the comprehensive technological and product know-how and the sector competence of the Siemens experts.

This leads to a reduction in downtimes and to optimized usage of resources. The result: increased productivity, flexibility, and efficiency along with lower total costs.

Discover all the advantages of our service portfolio:
www.siemens.com/industry-services

Online support

Rapidly available technical information in the form of manuals, FAQs, and application examples for all products from Siemens Industry mean that it is usually unnecessary to contact an expert.

The Siemens Industry Online Support additionally provides a platform for exchanging information with other users.

Technical support

Technical questions concerning products and systems can arise at any time – ranging from optimum usage up to troubleshooting.

The specialists at Technical Support provide 24/7 support and answer any questions concerning the functionality and operation of products and systems.

© Siemens AG 2013

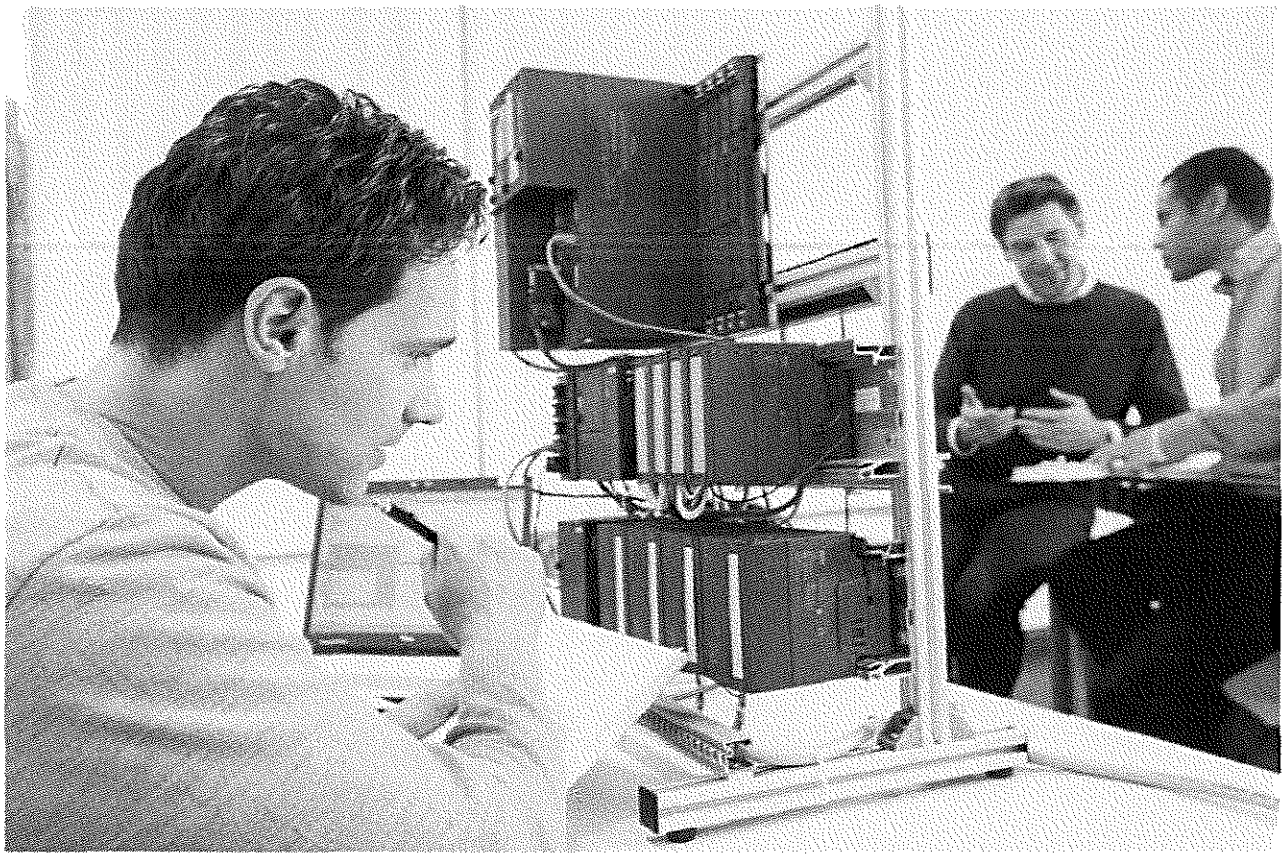

Spare parts

A missing spare part can impair the plant availability and result in production failures. It is good to know that the Siemens experts can provide a rapid and smooth exchange process.

Repair services

Reliable motors and converters are of great importance in every plant. To ensure that they always operate at maximum efficiency, the Siemens specialists worldwide provide comprehensive maintenance and look after any required repairs.

Field services

Downtimes must be avoided as much as possible. The field services from Siemens guarantee trouble-free commissioning and repair, including rapid interference suppression in industrial plants if necessary.

Training

Participation in professional training oriented according to target groups in more than 60 countries worldwide enables the acquisition of profound SIMATIC PCS 7 system knowledge as well as the expansion of existing know-how. In practice-oriented courses, participants receive excellent training directly from the manufacturer, and this enables them to efficiently use the process control system within the shortest possible time. The range of courses also includes special hands-on training directly on site at the customer's plant.

For additional information on SIMATIC PCS 7 training, see:
www.siemens.com/sitrain

© Siemens AG 2013

Service programs

As well as global service and support, the range of services of Siemens Industry Automation and Drive Technologies also includes special service programs for the process industry that can be used independently of each other and flexibly adapted.

SIMATIC PCS 7 Life Cycle Services

When making decisions concerning investments in new or innovative control technology, the associated costs must always be evaluated in relation to the total cost of ownership (TCO) of the plant. Support, maintenance, servicing, and modernization make a significant contribution to these costs. The short innovation cycles associated with the introduction of PC technology to process automation must also be taken into consideration. It is all the more important to keep servicing costs transparent and plannable. Indispensable in this regard is a cost-optimized life cycle service which guarantees the functionality of the control technology for a defined time period. By using active obsolescence management, Siemens takes into account the aging process of the I&C plants and supports its control system customers during the elaboration of specific substitute solutions as well as appropriate maintenance and spare parts strategies.

Based on many years of experience, the service specialists from Siemens have identified four fundamental requirement profiles and developed appropriate service modules which build upon each other: Standard Service, Maintenance Service, Basis Life Cycle Service and Extended Life Cycle Service (see graphic).

The scope of services agreed individually on the basis of service modules and additive supplementary services is stipulated in a contract. The contracts are flexible enough to allow adaptation in the event of plant modifications. The service contract management includes documentation, planning of measures, and performance controlling.

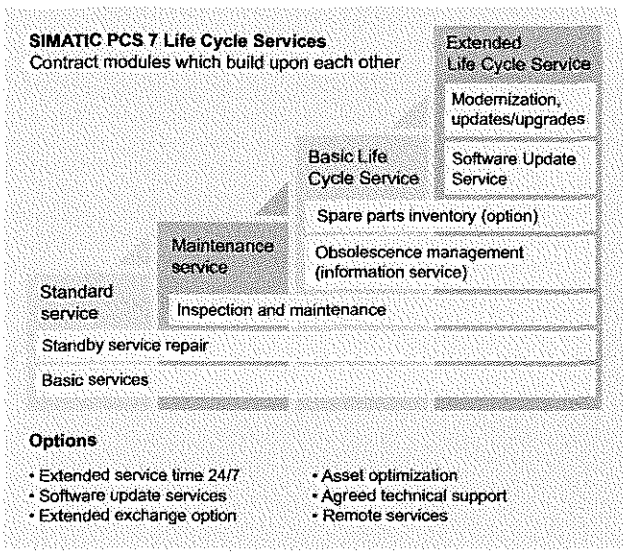

Safety Life Cycle Services

The safety life cycle is divided into analysis, implementation and operation, and it follows the life cycle of the I&C systems. Operators of safety-related I&C systems, e.g. chemical plants, refineries, and distilleries, who use safety-related systems and equipment to reduce the risk and effects of a safety event are obliged in accordance with IEC 61511 to verify the effectiveness of their protection measures in the safety life cycle.

In addition to the correct hardware and software, applied planning, operating, and modification processes are decisive in ensuring that the safety engineering effectively maintains its intended function throughout the complete life cycle of the plant. With Safety Life Cycle Services, Siemens provides not only the necessary expert know-how for safety verification, but also progressive tools and methods that exclude systemic errors in all project phases. This is all the more important since errors in an early project phase are often costly and time-consuming to correct at a later date.

In addition, plant operators do not have to acquire the expert know-how themselves and permanently adapt to the latest guidelines and technologies.

SIMATIC Remote Support Services

Using modern IT structures and secure Internet connections, SIMATIC Remote Support Services offer preventive, system-specific support, which is highly efficient, flexible and profitable.

The SIMATIC Remote Support Services are based on the high-performance Siemens Remote Service (SRS) platform, that enables secure remote access to the automation system - both by Siemens experts as well as by your own system specialists or system integrators.

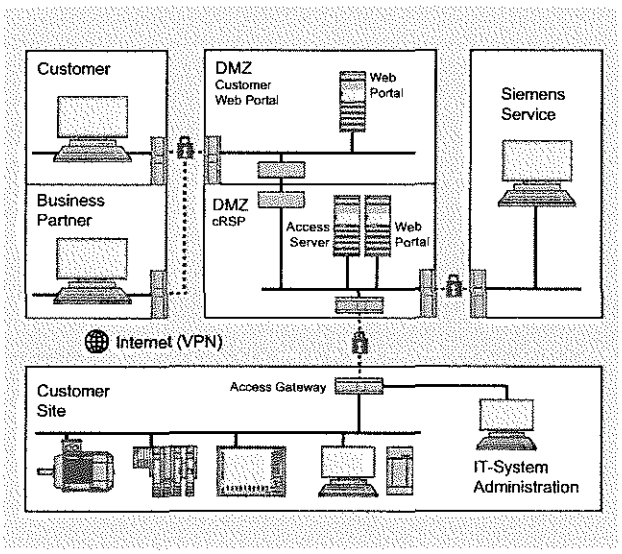

© Siemens AG 2013

Get more information

Comprehensive information concerning the SIMATIC PCS 7 process control system:
www.siemens.com/simatic-pcs7

Totally Integrated Automation:
www.siemens.com/totally-integrated-automation

SIMATIC Manual Overview:
www.siemens.com/simatic-docu

Information material to download:
www.siemens.com/simatic/printmaterial

Service&Support:
www.siemens.com/automation/support

SIMATIC contacts:
www.siemens.com/automation/partner

Industry Mall for electronic ordering:
www.siemens.com/industrymall

Siemens AG
Industry Sector
Industrial Automation Systems
Postfach 48 48
90026 NÜRNBERG
GERMANY

Subject to change without prior notice
Order No. E86060-A4678-A131-B3-7600
MP.R4.AS.SMP7.02.3.08 / Dispo 09508
BR 0413 5. AUM 96 En
Printed in Germany
© Siemens AG 2013

The information provided in this brochure contains descriptions or characteristics of performance which in case of actual use do not always apply as described or which may change as a result of further development of the products. An obligation to provide the respective characteristics shall only exist if expressly agreed in the terms of contract. Availability and technical specifications are subject to change without notice.
All product designations may be trademarks or product names of Siemens AG or supplier companies whose use by third parties for their own purposes could violate the rights of the owners.

www.siemens.com/automation

Chapter 3.2

Technical Literature -

SIMATIC CPU – S7 400 H

SIEMENS

Product data sheet 6ES7410-5HX08-0AB0

SIMATIC PCS 7,
CPU 410-5H PROCESS AUTOMATION,
CENTRAL UNIT FOR S7-400 AND S7-400H/F/FH,
5 INTERFACES: 1X PN, 1X DP,
2X FOR SYNC-MODULE AND 1X SERVICE

General information	
Hardware product version	1
Firmware version	V8.0
Design	with conformal coating
Engineering with	
Programming package	As of PCS 7 V8.0 SP1 + HUP CPU 410-5H
CiR - Configuration in RUN	
CiR synchronization time, basic load	60 ms
CiR synchronization time, time per I/O slave	0 µs
Input current	
from backplane bus 5 V DC, typ.	2 A
from backplane bus 5 V DC, max.	2.4 A
from backplane bus 24 V DC, max.	150 mA ; DP interface
from interface 5 V DC, max.	90 mA ; At the DP interface
Power loss	
Power loss, typ.	10 W
Memory	
Work memory	
integrated	32 Mbyte
integrated (for program)	16 Mbyte
integrated (for data)	16 Mbyte
expandable	No
Load memory	
expandable FEPROM	No
integrated RAM, max.	48 Mbyte
expandable RAM	No
Backup	
present	Yes
with battery	Yes ; all data
without battery	No

subject to modifications
© Copyright Siemens AG 2014

Battery	
Backup battery	
Backup current, typ.	370 µA ; Valid up to 40°C
Backup current, max.	2.1 mA
Backup time, max.	Dealt with in the module data manual with the secondary conditions and the factors of influence
Feeding of external backup voltage to CPU	No
CPU processing times	
for bit operations, typ.	7.5 ns
for word operations, typ.	7.5 ns
for fixed point arithmetic, typ.	7.5 ns
for floating point arithmetic, typ.	15 ns
Processing time (for 1000 binary instructions)	7.5 µs
CPU speed	450 MHz ; Multi-processor system
PCS 7 process objects	100 ... approx. 2600, adjustable with system expansion card
Average processing time of PCS 7 typicals	110 µs ; with APL Typicals
Process tasks, max.	9 ; Individually adjustable from 10 ms to 5 s
CPU-blocks	
DB	
Number, max.	16000 ; Number range: 1 to 16 000 (= Instances)
Size, max.	64 kbyte
FB	
Number, max.	8000 ; Number range: 0 to 7999
Size, max.	64 kbyte
FC	
Number, max.	8000 ; Number range: 0 to 7999
Size, max.	64 kbyte
OB	
Number, max.	see instruction list
Size, max.	64 kbyte
Number of free cycle OBs	1 ; OB 1
Number of time alarm OBs	8 ; OB 10-17
Number of delay alarm OBs	4 ; OB 20-23
Number of time interrupt OBs	9 ; OB 30-38 (= Process Tasks)
Number of process alarm OBs	8 ; OB 40-47
Number of DPV1 alarm OBs	3 ; OB 55-57
Number of startup OBs	2 ; OB 100, 102
Number of asynchronous error OBs	9 ; OB 80-88
Number of synchronous error OBs	2 ; OB 121, 122

subject to modifications
© Copyright Siemens AG 2014

Nesting depth	
per priority class	24
additional within an error OB	2
Counters, timers and their retentivity	
S7 counter	
Number	2048
Retentivity	
adjustable	No
Counting range	
lower limit	0
upper limit	999
IEC counter	
present	Yes
Type	SFB
Number	Unlimited (limited only by RAM capacity)
S7 times	
Number	2048
Retentivity	
adjustable	No
Time range	
lower limit	10 ms
upper limit	9990 s
IEC timer	
present	Yes
Type	SFB
Number	Unlimited (limited only by RAM capacity)
Data areas and their retentivity	
retentive data area, total	Total working and load memory (with backup battery)
Flag	
Number, max.	16384 byte
Retentivity available	No
Number of clock memories	8 ; in 1 memory byte
Data blocks	
Number, max.	16000 ; Number range: 1 to 16000
Size, max.	64 kbyte
Local data	
adjustable, max.	64 kbyte
preset	64 kbyte

subject to modifications
© Copyright Siemens AG 2014

Address area	
I/O address area	
Inputs	16 kbyte ; up to 7 500 IOs (channels)
Outputs	16 kbyte ; up to 7 500 IOs (channels)
of which distributed	
DP interface, inputs	6 kbyte ; up to 2 800 IOs (channels)
DP interface, outputs	6 kbyte ; up to 2 800 IOs (channels)
PN interface, inputs	8 kbyte ; up to 3 800 IOs (channels)
PN interface, outputs	8 kbyte ; up to 3 800 IOs (channels)
Process image	
Inputs, adjustable	16 kbyte
Outputs, adjustable	16 kbyte
Inputs, default	16 kbyte
Outputs, default	16 kbyte
consistent data, max.	244 byte
Access to consistent data in process image	Yes
Subprocess images	
Number of subprocess images, max.	15
Digital channels	
Inputs	131072 ; max.
Outputs	131072 ; max.
Inputs, of which central	131072 ; max.
Outputs, of which central	131072 ; max.
Max. number of addressable digital I/Os	131072
Analog channels	
Inputs	8192 ; max.
Outputs	8192 ; max.
Inputs, of which central	8192 ; max.
Outputs, of which central	8192 ; max.
Max. number of addressable analog I/Os	8192
Hardware configuration	
Expansion devices, max.	21 ; S7-400 expansion devices
connectable OPs	119
Multicomputing	No
Interface modules	
Number of connectable IMs (total), max.	6
Number of connectable IM 460s, max.	6
Number of connectable IM 463s, max.	4 ; Single mode only

subject to modifications
© Copyright Siemens AG 2014

Number of DP masters	
integrated	1
via CP	10 ; CP 443-5 Extended
Number of IO Controllers	
integrated	1
via CP	0
Number of operable FMs and CPs (recommended)	
PROFIBUS and Ethernet CPs	14 ; Of which max. 10 CP as DP master
Slots	
required slots	2
Time of day	
Clock	
Hardware clock (real-time clock)	Yes
battery-backed and synchronizable	Yes
Resolution	1 ms
Deviation per day (buffered), max.	1.7 ms ; Power off
Deviation per day (unbuffered) max.	8.6 ms ; Power on
Operating hours counter	
Number	16
Number/Number range	0 to 15
Range of values	SFCs 2, 3 and 4: 0 to 32767 hours SFC 101: 0 to 2^31 - 1 hours
Granularity	1 hour
retentive	Yes
Clock synchronization	
supported	Yes
to DP, master	Yes
to DP, slave	Yes
in AS, master	Yes
in AS, slave	Yes
on Ethernet via NTP	Yes ; As client
Time difference in system when synchronizing via	
Ethernet, max.	10 ms
Interfaces	
Number of RS 485 interfaces	1 ; PROFIBUS DP
Number of other interfaces	3 ; 2x synchronization, 1x service
PROFINET IO	
Number of PROFINET interfaces	1
1. Interface	

subject to modifications
© Copyright Siemens AG 2014

Interface type	Integrated
Physics	RS 485 / PROFIBUS
isolated	Yes
Power supply to interface (15 to 30 V DC), max.	150 mA
Number of connection resources	16
Functionality	
DP master	Yes
DP slave	No
DP master	
Number of connections, max.	16
Transmission rate, max.	12 Mbit/s
Number of DP slaves, max.	96
Services	
PG/OP communication	Yes
Routing	Yes
Global data communication	No
S7 basic communication	No
S7 communication	Yes
S7 communication, as client	Yes
S7 communication, as server	Yes
Equidistance mode support	No
Isochronous mode	No
SYNC/FREEZE	No
Activation/deactivation of DP slaves	No
Direct data exchange (slave-to-slave communication)	No
DPV1	Yes
Address area	
Inputs, max.	6 kbyte ; up to 2 800 IOs (channels)
Outputs, max.	6 kbyte ; up to 2 800 IOs (channels)
User data per DP slave	
User data per DP slave, max.	244 byte
Inputs, max.	244 byte
Outputs, max.	244 byte
Slots, max.	244
per slot, max.	128 byte
2. Interface	
Interface type	PROFINET
Physics	Ethernet RJ45
isolated	Yes

subject to modifications
© Copyright Siemens AG 2014

integrated switch	Yes
Number of ports	2
automatic detection of transmission rate	Yes ; Autosensing
Autonegotiation	Yes
Autocrossing	Yes
Change of IP address at runtime, supported	No
Number of connection resources	120
Media redundancy	
supported	Yes
Switchover time on line break, typ.	200 ms
Number of stations in the ring, max.	50
Functionality	
PROFINET IO Controller	Yes
PROFINET IO Device	No
PROFINET CBA	No
Open IE communication	Yes
Web server	No
PROFINET IO Controller	
Transmission rate, max.	100 Mbit/s
Number of connectable IO Devices, max.	250
Number of connectable IO Devices for RT, max.	250
of which in line, max.	250
Shared device, supported	No ; however, usable as part of S7
Prioritized startup supported	No
Activation/deactivation of IO Devices	No
IO Devices changing during operation (partner ports), supported	No
Device replacement without swap medium	Yes
Send cycles	250 µs, 500 µs, 1 ms, 2 ms, 4 ms
Updating time	250 µs to 512 ms, minimum value depends on the number of configured user data and the configured single or redundant mode
Services	
PG/OP communication	Yes
S7 routing	Yes
S7 communication	Yes
Open IE communication	Yes
Address area	
Inputs, max.	8 kbyte ; up to 3 800 IOs (channels)
Outputs, max.	8 kbyte ; up to 3 800 IOs (channels)

subject to modifications
© Copyright Siemens AG 2014

User data consistency, max.	1024 byte
Open IE communication	
Open IE communication, supported	Yes
Number of connections, max.	118
Local port numbers used at the system end	0, 20, 21, 25, 102, 135, 161, 34962, 34963, 34964, 65532, 65533, 65534, 65535
Keep-alive function, supported	Yes
3. Interface	
Interface type	Integrated
Physics	RJ45 (for service only)
4. Interface	
Interface type	Pluggable synchronization submodule (FO)
Plug-in interface modules	Synchronization modules 6ES7960-1AA06-0XA0 or 6ES7960-1AB06-0XA0
5. Interface	
Interface type	Pluggable synchronization submodule (FO)
Plug-in interface modules	Synchronization modules 6ES7960-1AA06-0XA0 or 6ES7960-1AB06-0XA0
Protocols	
PROFINET IO	Yes
PROFINET CBA	No
PROFIsafe	Yes
PROFIBUS	Yes
Protocols (Ethernet)	
TCP/IP	Yes
Further protocols	
AS-i	Yes ; Via add-on
MODBUS	Yes ; Via add-on
Foundation Fieldbus	Yes ; via DP/FF Link
Communication functions	
PG/OP communication	Yes
Number of connectable OPs without message processing	119
Number of connectable OPs with message processing	119 ; When using Alarm_S/SQ and Alarm_D/DQ
Data record routing	Yes
S7 routing	Yes
S7 communication	
supported	Yes
as server	Yes
as client	Yes

subject to modifications
© Copyright Siemens AG 2014

User data per job, max.	64 kbyte
User data per job (of which consistent), max.	462 byte ; 1 variable
S5 compatible communication	
supported	Yes ; (via CP max. 10 and FC AG_SEND and FC AG_RECV)
User data per job, max.	8 kbyte
User data per job (of which consistent), max.	240 byte
Number of simultaneous AG-SEND/AG-RECV orders per CPU, max.	64/64
Standard communication (FMS)	
supported	Yes ; Via CP and loadable FB
Open IE communication	
TCP/IP	Yes ; via integrated PROFINET interface and loadable FBs
Number of connections, max.	118
Data length, max.	32 kbyte
Several passive connections per port, supported	Yes
ISO-on-TCP (RFC1006)	Yes ; Via integrated PROFINET interface or CP 443-1 and loadable FBs
Number of connections, max.	118
Data length, max.	32 kbyte ; 1452 bytes via CP 443-1 Adv.
UDP	Yes ; via integrated PROFINET interface and loadable FBs
Number of connections, max.	118
Data length, max.	1472 byte
Number of connections	
overall	120
usable for PG communication	
reserved for PG communication	1
usable for OP communication	
reserved for OP communication	1
S7 message functions	
Number of login stations for message functions, max.	119 ; Max. 119 with Alarm_S and Alarm_D (OPs); max. 12 with Alarm_8 and Alarm_P (e.g. WinCC)
Symbol-related messages	No
SCAN procedure	No
Block related messages	Yes
Process diagnostic messages	Yes
simultaneously active Alarm-S blocks, max.	1000 ; Simultaneously active alarm_S/SQ blocks or alarm_D/DQ blocks
Alarm 8-blocks	Yes
Number of instances for alarm 8 and S7 communication blocks, max.	10000

subject to modifications
© Copyright Siemens AG 2014

preset, max.	10000
Process control messages	Yes
Number of archives that can log on simultaneously (SFB 37 AR_SEND)	64
Test commissioning functions	
Status block	Yes
Single step	Yes
Number of breakpoints	4
Status/control	
Status/control variable	Yes
Variables	Inputs/outputs, memory bits, DBs, distributed I/Os, timers, counters
Number of variables, max.	70
Diagnostic buffer	
present	Yes
Service data	
can be read out	Yes
EMC	
Emission of radio interference acc. to EN 55 011	
Limit class A, for use in industrial areas	Yes
Limit class B, for use in residential areas	No
Configuration	
Programming	
Command set	see instruction list
Nesting levels	7
Access to consistent data in process image	Yes
System functions (SFC)	see instruction list
System function blocks (SFB)	see instruction list
Programming language	
LAD	Yes
FBD	Yes
STL	Yes
SCL	Yes
CFC	Yes
GRAPH	Yes
HiGraph®	Yes
Number of simultaneously active SFCs	
RD_REC	8
WR_REC	8
WR_PARM	8

subject to modifications
© Copyright Siemens AG 2014

PARM_MOD	1
WR_DPARM	2
DPNRM_DG	8
RDSYSST	8
DP_TOPOL	1
Number of simultaneously active SFBs	
RD_REC	8
WR_REC	8
Know-how protection	
User program protection/password protection	Yes
Block encryption	Yes ; With S7 block Privacy
Dimensions	
Width	50 mm
Height	290 mm
Depth	219 mm
Weights	
Weight, approx.	1.1 kg
Status	Jul 7, 2014

subject to modifications
© Copyright Siemens AG 2014

Chapter 3.3

Technical Literature -

Ethernet Communication Processor CP 443-1

SIEMENS

Product data sheet 6GK7443-1EX30-0XE0

Product-type designation	CP 443-1
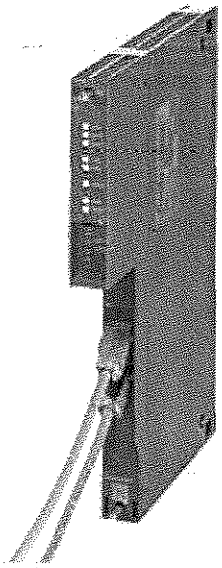	SIMATIC NET CP 443-1 2 X 10/100 MBIT/S (IE SWITCH); RJ 45 PORTS; ISO; TCP; UDP; PROFINET-IO CONTROLLER; S7-COMMUNCATION; OPEN COMMUNICATION (SEND/RE- CEIVE); S7-ROUTING; IP-CONFIGU- RATION VIA DHCP/BLOCK; IP ACCESSS CONTROL LIST; TIME- SYNCHRONISATION; EXTENDED WEB-DIAGNOSIS; FAST STARTUP; PROFIENERGY SUPPORT
Transmission rate	
Transfer rate / at the interface 1	10 ... 100 Mbit/s
Interfaces	
Number of electrical connections / at interface 1 / in accordance with Industrial Ethernet	2
Design of electrical connection / at interface 1 / in accordance with Industrial Ethernet	RJ45 port
Supply voltage, current consumption, power loss	
Type of / supply voltage	DC
Supply voltage / 1 / from backplane bus	5 V
Relative symmetrical tolerance / at 5 V / with DC	5 %
Consumed current / from backplane bus / at 5 V / for DC / Typical	1.4 A
Resistive loss	8.6 W
Permitted ambient conditions	
Ambient temperature	
• during operating	0 ... 60 °C
• during storage	-40 ... +70 °C
• during transport	-40 ... +70 °C
Relative humidity / at 25 °C / without condensation / during operating / maximum	95 %
Protection class IP	IP20

subject to modifications
© Copyright Siemens AG 2014

Design, dimensions and weight	
Module format	Compact module S7-400 single width
Width	25 mm
Height	290 mm
Depth	210 mm
Net weight	0.7 kg
Product properties, functions, components / general	
Number of modules	
• per CPU / maximum	14
• note	max. 4 as PN IO ctrl.
Performance data / open communication	
Number of possible connections / for open communication / by means of SEND/RECEIVE blocks / maximum	64
Data volume	
• as user data per ISO connection / for open communication / by means of SEND/RECEIVE blocks / maximum	8 Kibyte
• as user data per ISO on TCP connection / for open communication / by means of SEND/RECEIVE blocks / maximum	8 Kibyte
• as user data per TCP connection / for open communication / by means of SEND/RECEIVE blocks / maximum	8 Kibyte
• as user data per UDP connection / for open IE communication / by means of SEND/RECEIVE blocks / maximum	2 Kibyte
Number of possible connections / for open communication / by means of T blocks / maximum	64
Data volume / as user data per ISO on TCP connection / for open communication / by means of T blocks / maximum	1452 byte
Performance data / S7 communication	
Number of possible connections / for S7 communication	
• maximum	128
• with PG connections / maximum	2
• note	when using several CPUs
Performance data / multi-protocol mode	
Number of active connections / with multiprotocol mode	128
Performance data / PROFINET communication / as PN IO-Controller	
Product function / PROFINET IO controller	Yes
Number of PN IO-Devices / on PROFINET IO-Controller / usable / total	128
Number of PN IO IRT-Devices / on PROFINET IO-Controller / usable	64
Number of external PN IO lines / with PROFINET / per rack	4
Data volume	

subject to modifications
© Copyright Siemens AG 2014

• as useful data for input variables / as PROFINET IO controller / maximum	4 Kibyte
• as useful data for output variables / with PROFINET IO controller / maximum	4 Kibyte
• as useful data for input variables per PN IO device / with PROFINET IO controller / maximum	1433 byte
• as useful data for output variables per PN IO device / with PROFINET IO controller / maximum	1433 byte
• as user data for input variable per PN IO device / per submodule as PROFINET IO controller / maximum	240 byte
• as user data for output variables per PN IO device / per submodule as PROFINET IO controller / maximum	240 byte
Product functions / management, configuration	
Product function / MIB support	Yes
Protocol / is supported	
• SNMP v1	Yes
• DCP	Yes
• LLDP	Yes
Product functions / Diagnosis	
Product function / Web-based diagnostics	Yes
Product functions / switch	
Product feature / switch	Yes
Product function	
• switch-managed	No
• for IRT / PROFINET IO switch	Yes
• Configuration with STEP 7	Yes
Product functions / Redundancy	
Product function	
• Ring redundancy	Yes
• Redundancy manager	Yes
• Media Redundancy Protocol (MRP)	Yes
Product functions / Security	
Product function	
• ACL - IP-based	Yes
• switchoff of non-required services	Yes
• blocking of communication via physical ports	Yes
• log file for unauthorized access	No
Product functions / Time	
Product function	
• SICLOCK support	Yes
• pass on time synchronization	Yes

subject to modifications
© Copyright Siemens AG 2014

Protocol / is supported / NTP	Yes
Further Information / Internet Links	
Internet-Link	
• to website: Industry Mall	http://www.siemens.com/industrial-controls/mall
• to website: Selector SIMATIC NET SELECTION TOOL	http://www.siemens.com/snst
• to website: Industrial communication	http://www.siemens.com/simatic-net
• to website: Information and Download Center	http://www.siemens.com/automation/net/catalog
• to website: Image database	http://automation.siemens.com/bilddb
• to website: CAx Download Manager	http://www.siemens.com/cax
• to website: Industry Online Support	http://support.automation.siemens.com
letzte Änderung:	Jul 7, 2014

subject to modifications
© Copyright Siemens AG 2014

Chapter 3.4

Technical Literature -

SIMATIC CPU – S7 300-2DP

SIEMENS

Product data sheet 6ES7317-2EK14-0AB0

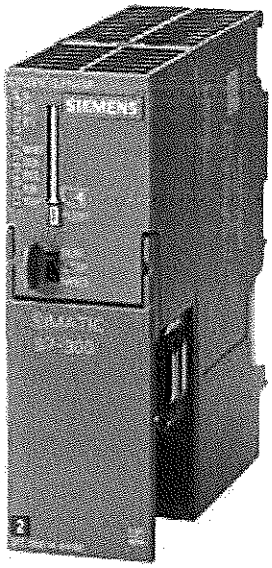

SIMATIC S7-300 CPU 317-2 PN/DP,
CENTRAL PROCESSING UNIT WITH 1 MB WORKING MEMORY,
1. INTERFACE MPI/DP 12MBIT/S,
2. INTERFACE ETHERNET PROFINET,
WITH 2 PORT SWITCH,
MICRO MEMORY CARD NECESSARY

-

General information	
Hardware product version	01
Firmware version	V3.2
Engineering with	
Programming package	STEP7 V 5.5 or higher
Supply voltage	
24 V DC	Yes
permissible range, lower limit (DC)	20.4 V
permissible range, upper limit (DC)	28.8 V
external protection for power supply lines (recommendation)	2 A min.
Mains buffering	
Mains/voltage failure stored energy time	5 ms
Repeat rate, min.	1 s
Input current	
Current consumption (rated value)	750 mA
Current consumption (in no-load operation), typ.	150 mA
Inrush current, typ.	4 A
I^2t	1 $A^2 \cdot s$
Power loss	

subject to modifications
© Copyright Siemens AG 2014

Power loss, typ.	4.65 W
Memory	
Type of memory	other
Work memory	
integrated	1024 kbyte
expandable	No
Size of retentive memory for retentive data blocks	256 kbyte
Load memory	
Plug-in (MMC)	Yes
Plug-in (MMC), max.	8 Mbyte
Data management on MMC (after last programming), min.	10 a
Backup	
present	Yes ; Guaranteed by MMC (maintenance-free)
without battery	Yes ; Program and data
CPU processing times	
for bit operations, typ.	0.025 µs
for word operations, typ.	0.03 µs
for fixed point arithmetic, typ.	0.04 µs
for floating point arithmetic, typ.	0.16 µs
CPU-blocks	
Number of blocks (total)	2048 ; (DBs, FCs, FBs); the maximum number of loadable blocks can be reduced by the MMC used.
DB	
Number, max.	2048 ; Number range: 1 to 16000
Size, max.	64 kbyte
FB	
Number, max.	2048 ; Number range: 0 to 7999
Size, max.	64 kbyte
FC	
Number, max.	2048 ; Number range: 0 to 7999
Size, max.	64 kbyte
OB	
Size, max.	64 kbyte
Number of free cycle OBs	1 ; OB 1
Number of time alarm OBs	1 ; OB 10
Number of delay alarm OBs	2 ; OB 20, 21
Number of time interrupt OBs	4 ; OB 32, 33, 34, 35
Number of process alarm OBs	1 ; OB 40
Number of DPV1 alarm OBs	3 ; OB 55, 56, 57

subject to modifications
© Copyright Siemens AG 2014

Number of isochronous mode OBs	1 ; OB 61 - isochronous mode is possible either on DP or PROFINET IO (not simultaneously)
Number of startup OBs	1 ; OB 100
Number of asynchronous error OBs	6 ; OB 80, 82, 83, 85, 86, 87 (OB83 only for PROFINET IO)
Number of synchronous error OBs	2 ; OB 121, 122
Nesting depth	
per priority class	16
additional within an error OB	4
Counters, timers and their retentivity	
S7 counter	
Number	512
Retentivity	
adjustable	Yes
lower limit	0
upper limit	511
preset	Z 0 to Z 7
Counting range	
adjustable	Yes
lower limit	0
upper limit	999
IEC counter	
present	Yes
Type	SFB
Number	Unlimited (limited only by RAM capacity)
S7 times	
Number	512
Retentivity	
adjustable	Yes
lower limit	0
upper limit	511
preset	No retentivity
Time range	
lower limit	10 ms
upper limit	9990 s
IEC timer	
present	Yes
Type	SFB
Number	Unlimited (limited only by RAM capacity)
Data areas and their retentivity	

subject to modifications
© Copyright Siemens AG 2014

retentive data area, total	All, max. 256 KB
Flag	
Number, max.	4096 byte
Retentivity available	Yes ; From MB 0 to MB 4095
Retentivity preset	MB 0 to MB 15
Number of clock memories	8 ; 1 memory byte
Data blocks	
Number, max.	2048 ; Number range: 1 to 16000
Size, max.	64 kbyte
Retentivity adjustable	Yes ; via non-retain property on DB
Retentivity preset	Yes
Local data	
per priority class, max.	32768 byte ; Max. 2048 bytes per block
Address area	
I/O address area	
Inputs	8192 byte
Outputs	8192 byte
of which distributed	
Inputs	8192 byte
Outputs	8192 byte
Process image	
Inputs	8192 byte
Outputs	8192 byte
Inputs, adjustable	8192 byte
Outputs, adjustable	8192 byte
Inputs, default	256 byte
Outputs, default	256 byte
Subprocess images	
Number of subprocess images, max.	1 ; With PROFINET IO, the length of the user data is limited to 1600 bytes
Digital channels	
Inputs	65536
Outputs	65536
Inputs, of which central	1024
Outputs, of which central	1024
Analog channels	
Inputs	4096
Outputs	4096
Inputs, of which central	256

subject to modifications
© Copyright Siemens AG 2014

Outputs, of which central	256
Hardware configuration	
Expansion devices, max.	3
Number of DP masters	
Integrated	1
via CP	4
Number of operable FMs and CPs (recommended)	
FM	8
CP, point-to-point	8
CP, LAN	10
Rack	
Racks, max.	4
Modules per rack, max.	8
Time of day	
Clock	
Hardware clock (real-time clock)	Yes
battery-backed and synchronizable	Yes
Deviation per day, max.	10 s ; Typ.: 2 s
Backup time	6 wk ; At 40 °C ambient temperature
Behavior of the clock following POWER-ON	Clock continues running after POWER OFF
Behavior of the clock following expiry of backup period	Clock continues to run with the time at which the power failure occurred
Operating hours counter	
Number	4
Number/Number range	0 to 3
Range of values	0 to 2^31 hours (when using SFC 101)
Granularity	1 hour
retentive	Yes ; Must be restarted at each restart
Clock synchronization	
supported	Yes
to MPI, master	Yes
to MPI, slave	Yes
to DP, master	Yes ; With DP slave only slave clock
to DP, slave	Yes
in AS, master	Yes
in AS, slave	Yes
on Ethernet via NTP	Yes ; As client
Digital inputs	
Number of digital inputs	0

subject to modifications
© Copyright Siemens AG 2014

Digital outputs	
Number of digital outputs	0
Analog inputs	
Number of analog inputs	0
Analog outputs	
Number of analog outputs	0
Interfaces	
Number of USB interfaces	0
Number of parallel interfaces	0
Number of 20 mA interfaces (TTY)	0
Number of RS 232 interfaces	0
Number of RS 422 interfaces	0
Number of other interfaces	1 ; Ethernet, 2-port switch, 2*RJ45
1. Interface	
Interface type	Integrated RS 485 interface
Physics	RS 485
isolated	Yes
Power supply to interface (15 to 30 V DC), max.	200 mA
Functionality	
MPI	Yes
DP master	Yes
DP slave	Yes
Point-to-point connection	No
MPI	
Transmission rate, max.	12 Mbit/s
Services	
PG/OP communication	Yes
Routing	Yes
Global data communication	Yes
S7 basic communication	Yes
S7 communication	Yes
S7 communication, as client	No ; but via CP and loadable FB
S7 communication, as server	Yes ; Connection configured on one side only
DP master	
Transmission rate, max.	12 Mbit/s
Number of DP slaves, max.	124
Services	
PG/OP communication	Yes

subject to modifications
© Copyright Siemens AG 2014

Routing	Yes
Global data communication	No
S7 basic communication	Yes ; I blocks only
S7 communication	Yes
S7 communication, as client	No
S7 communication, as server	Yes
Equidistance mode support	Yes
Isochronous mode	Yes ; OB 61; isochronous mode can only be used alternatively on PROFIBUS DP or PROFINET IO
SYNC/FREEZE	Yes
Activation/deactivation of DP slaves	Yes
Number of DP slaves that can be simultaneously activated/deactivated, max.	8
Direct data exchange (slave-to-slave communication)	Yes ; As subscriber
DPV1	Yes
Address area	
Inputs, max.	8 kbyte
Outputs, max.	8 kbyte
User data per DP slave	
Inputs, max.	244 byte
Outputs, max.	244 byte
DP slave	
Transmission rate, max.	12 Mbit/s
Automatic baud rate search	Yes ; only with passive interface
Address area, max.	32
User data per address area, max.	32 byte
Services	
PG/OP communication	Yes
Routing	Yes ; Only with active interface
Global data communication	No
S7 basic communication	No
S7 communication	Yes
S7 communication, as client	No
S7 communication, as server	Yes ; Connection configured on one side only
Direct data exchange (slave-to-slave communication)	Yes
DPV1	No
Transfer memory	
Inputs	244 byte
Outputs	244 byte

subject to modifications
© Copyright Siemens AG 2014

2. Interface	
Interface type	PROFINET
Physics	Ethernet RJ45
isolated	Yes
integrated switch	Yes
Number of ports	2
automatic detection of transmission rate	Yes ; 10/100 Mbit/s
Autonegotiation	Yes
Autocrossing	Yes
Change of IP address at runtime, supported	Yes
Media redundancy	
supported	Yes
Switchover time on line break, typ.	200 ms ; PROFINET MRP
Number of stations in the ring, max.	50
Functionality	
MPI	No
DP master	No
DP slave	No
PROFINET IO Controller	Yes ; Also simultaneously with IO-Device functionality
PROFINET IO Device	Yes ; Also simultaneously with IO Controller functionality
PROFINET CBA	Yes
Open IE communication	Yes ; Via TCP/IP, ISO on TCP, and UDP
Web server	Yes
Number of HTTP clients	5
PROFINET IO Controller	
Transmission rate, max.	100 Mbit/s
Number of connectable IO Devices, max.	128
Number of connectable IO Devices for RT, max.	128
of which in line, max.	128
Number of IO Devices with IRT and the option "high flexibility"	128
of which in line, max.	61
Number of IO Devices with IRT and the option "high performance", max.	64
of which in line, max.	64
IRT, supported	Yes
Shared device, supported	Yes
Prioritized startup supported	Yes
Number of IO Devices, max.	32
Activation/deactivation of IO Devices	Yes

subject to modifications
© Copyright Siemens AG 2014

Number of IO Devices that can be simultaneously activated/deactivated, max.	8
IO Devices changing during operation (partner ports), supported	Yes
Number of IO Devices per tool, max.	8
Device replacement without swap medium	Yes
Send cycles	250 µs, 500 µs,1 ms; 2 ms, 4 ms (not in the case of IRT with "high flexibility" option)
Updating time	250 µs to 512 ms (depending on the operating mode, see Manual "S7-300 CPU 31xC and CPU 31x, Technical Data" for more details)
Services	
PG/OP communication	Yes
Routing	Yes
S7 communication	Yes ; with loadable FBs, max. configurable connections: 16, max. number of instances: 32
Isochronous mode	Yes ; OB 61; isochronous mode can only be used alternatively on PROFIBUS DP or PROFINET IO
Open IE communication	Yes ; Via TCP/IP, ISO on TCP, and UDP
Address area	
Inputs, max.	8 kbyte
Outputs, max.	8 kbyte
User data consistency, max.	1024 byte
PROFINET IO Device	
Services	
PG/OP communication	Yes
Routing	Yes
S7 communication	Yes ; with loadable FBs, max. configurable connections: 16, max. number of instances: 32
Isochronous mode	No
Open IE communication	Yes ; Via TCP/IP, ISO on TCP, and UDP
IRT	Yes
PROFIenergy, supported	Yes ; With SFB 73 / 74 prepared for loadable PROFIenergy standard FB for I-Device
Shared device	Yes
Number of IO Controllers with shared device, max.	2
Transfer memory	
Inputs, max.	1440 byte ; Per IO Controller with shared device
Outputs, max.	1440 byte ; Per IO Controller with shared device
Submodules	
Number, max.	64
User data per submodule, max.	1024 byte

subject to modifications
© Copyright Siemens AG 2014

PROFINET CBA	
acyclic transmission	Yes
cyclic transmission	Yes
Open IE communication	
Open IE communication, supported	Yes
Number of connections, max.	16
Local port numbers used at the system end	0, 20, 21, 23, 25, 80, 102, 135, 161, 443, 8080, 34962, 34963, 34964, 65532, 65533, 65534, 65535
Keep-alive function, supported	Yes
Isochronous mode	
Isochronous mode (application synchronized up to terminal)	Yes ; Via PROFIBUS DP or PROFINET interface
Communication functions	
PG/OP communication	Yes
Data record routing	Yes
Global data communication	
supported	Yes
Number of GD loops, max.	8
Number of GD packets, max.	8
Number of GD packets, transmitter, max.	8
Number of GD packets, receiver, max.	8
Size of GD packets, max.	22 byte
Size of GD packet (of which consistent), max.	22 byte
S7 basic communication	
supported	Yes
User data per job, max.	76 byte
User data per job (of which consistent), max.	76 byte ; 76 bytes (with X_SEND or X_RCV); 64 bytes (with X_PUT or X_GET as server)
S7 communication	
supported	Yes
as server	Yes
as client	Yes ; via integrated PROFINET interface and loadable FB or via CP and loadable FB
User data per job, max.	See online help of STEP 7 (shared parameters of the SFBs/FBs and of the SFCs/FCs of S7 Communication)
S5 compatible communication	
supported	Yes ; via CP and loadable FC
Open IE communication	
TCP/IP	Yes ; via integrated PROFINET interface and loadable FBs
Number of connections, max.	16
Data length for connection type 01H, max.	1460 byte

subject to modifications
© Copyright Siemens AG 2014

Data length for connection type 11H, max.	32768 byte
Several passive connections per port, supported	Yes
ISO-on-TCP (RFC1006)	Yes ; via integrated PROFINET interface and loadable FBs
Number of connections, max.	16
Data length, max.	32768 byte
UDP	Yes ; via integrated PROFINET interface and loadable FBs
Number of connections, max.	16
Data length, max.	1472 byte
Web server	
supported	Yes
Number of HTTP clients	5
User-defined websites	Yes
PROFINET CBA (at set setpoint communication load)	
Setpoint for the CPU communication load	50 %
Number of remote interconnection partners	32
Number of functions, master/slave	30
Total of all master/slave connections	1000
Data length of all incoming connections master/slave, max.	4000 byte
Data length of all outgoing connections master/slave, max.	4000 byte
Number of device-internal and PROFIBUS interconnections	500
Data length of device-internal und PROFIBUS interconnections, max.	4000 byte
Data length per connection, max.	1400 byte
Remote interconnections with acyclic transmission	
Sampling frequency: Sampling time, min.	500 ms
Number of incoming interconnections	100
Number of outgoing interconnections	100
Data length of all incoming interconnections, max.	2000 byte
Data length of all outgoing interconnections, max.	2000 byte
Data length per connection, max.	1400 byte
Remote interconnections with cyclic transmission	
Transmission frequency: Transmission interval, min.	10 ms
Number of incoming interconnections	200
Number of outgoing interconnections	200
Data length of all incoming interconnections, max.	2000 byte
Data length of all outgoing interconnections, max.	2000 byte
Data length per connection, max.	450 byte
HMI variables via PROFINET (acyclic)	

subject to modifications
© Copyright Siemens AG 2014

Number of stations that can log on for HMI variables (PN OPC/iMap)	3 ; 2x PN OPC/1x iMap
HMI variable updating	500 ms
Number of HMI variables	200
Data length of all HMI variables, max.	2000 byte
PROFIBUS proxy functionality	
supported	Yes
Number of linked PROFIBUS devices	16
Data length per connection, max.	240 byte ; Slave-dependent
Number of connections	
overall	32
usable for PG communication	31
reserved for PG communication	1
adjustable for PG communication, min.	1
adjustable for PG communication, max.	31
usable for OP communication	31
reserved for OP communication	1
adjustable for OP communication, min.	1
adjustable for OP communication, max.	31
usable for S7 basic communication	30
reserved for S7 basic communication	0
adjustable for S7 basic communication, min.	0
adjustable for S7 basic communication, max.	30
usable for S7 communication	16
reserved for S7 communication	0
adjustable for S7 communication, min.	0
adjustable for S7 communication, max.	16
total number of instances, max.	32
usable for routing	X1 as MPI: max. 10; X1 as DP master: max. 24; X1 as DP slave (active): max. 14; X2 as PROFINET: 24 max.
S7 message functions	
Number of login stations for message functions, max.	32 ; Depending on the configured connections for PG/OP and S7 basic communication
Process diagnostic messages	Yes
simultaneously active Alarm-S blocks, max.	300
Test commissioning functions	
Status block	Yes ; Up to 2 simultaneously
Single step	Yes
Number of breakpoints	4
Status/control	

subject to modifications
© Copyright Siemens AG 2014

Status/control variable	Yes
Variables	Inputs, outputs, memory bits, DB, times, counters
Number of variables, max.	30
of which status variables, max.	30
of which control variables, max.	14
Forcing	
Forcing	Yes
Forcing, variables	Inputs, outputs
Number of variables, max.	10
Diagnostic buffer	
present	Yes
Number of entries, max.	500
adjustable	No
of which powerfail-proof	100 ; Only the last 100 entries are retained
Number of entries readable in RUN, max.	499
adjustable	Yes ; From 10 to 499
preset	10
Service data	
can be read out	Yes
Ambient conditions	
Operating temperature	
min.	0 °C
max.	60 °C
Configuration	
Configuration software	
STEP 7	Yes ; V5.5 or higher
Programming	
Command set	see instruction list
Nesting levels	8
System functions (SFC)	see instruction list
System function blocks (SFB)	see instruction list
Programming language	
LAD	Yes
FBD	Yes
STL	Yes
SCL	Yes
CFC	Yes
GRAPH	Yes

subject to modifications
© Copyright Siemens AG 2014

HiGraph®	Yes
Know-how protection	
User program protection/password protection	Yes
Block encryption	Yes ; With S7 block Privacy
Dimensions	
Width	40 mm
Height	125 mm
Depth	130 mm
Weights	
Weight, approx.	340 g
Status	Jul 7, 2014

subject to modifications
© Copyright Siemens AG 2014

Chapter 3.5

Technical Literature -

Ethernet Communication Processor CP 343-1

SIEMENS

Product data sheet 6GK7343-1GX30-0XE0

Product-type designation	CP 343-1 Advanced
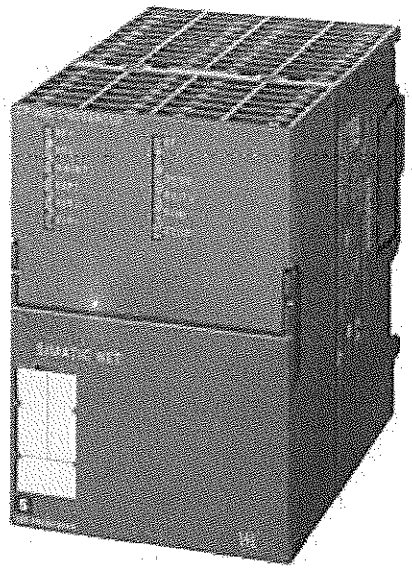	COMMUNICATIONSPROCESSOR CP343-1 ADVANCED FOR CONNECTING SIMATIC S7-300CPU TO IND.ETHERNET: PROFINET IO- CONTROLLER OR/AND IO-DEVICE RT AND IRT, MRP, PROFINET CBA TCP/IP,ISO,UDP,S7-COM,S5-COMP. COM.(SEND/RECEIVE)W.FETCH/WRITE WIT AND W/O RFC 1006,MULTICAST DIAGNOSTIC EXPANSIONS,SNMP,DHCP FTP CLIENT/SERVER,E-MAIL, DATA STORAGE ON C-PLUG, PROFINET-SS 2X RJ45(10/100MBIT) SWITCHED, GIGABIT-SS 1X RJ45 (10/100/1000 MBIT)
Transmission rate	
Transfer rate	
• at the interface 1	10 ... 1000 Mbit/s
• at the interface 2	10 ... 100 Mbit/s
Interfaces	
Number of electrical connections	
• at interface 1 / in accordance with Industrial Ethernet	1
• at interface 2 / in accordance with Industrial Ethernet	2
• for power supply	1
Design of electrical connection	
• at interface 1 / in accordance with Industrial Ethernet	RJ45 port
• at interface 2 / in accordance with Industrial Ethernet	RJ45 port
design of the removable storage / C-PLUG	Yes
Supply voltage, current consumption, power loss	
Type of / supply voltage	DC
Supply voltage	
• 1 / from backplane bus	5 V
• external	24 V
Relative positive tolerance / at 24 V / with DC	20 %
Relative negative tolerance / at 24 V / with DC	15 %

subject to modifications
© Copyright Siemens AG 2014

Consumed current	
• from backplane bus / at 5 V / for DC / Typical	0.14 A
• from external supply voltage / at 24 V / with DC	
• typical	0.48 A
• maximum	0.62 A
Resistive loss	14.7 W
Permitted ambient conditions	
Ambient temperature	
• for vertical installation / during operating phase	0 ... 40 °C
• for horizontal installation / during operating phase	0 ... 60 °C
• during storage	-40 ... +70 °C
• during transport	-40 ... +70 °C
Relative humidity / at 25 °C / without condensation / during operating / maximum	95 %
Protection class IP	IP20
Design, dimensions and weight	
Module format	Compact module S7-300 double width
Width	80 mm
Height	125 mm
Depth	120 mm
Net weight	0.6 kg
Performance data / open communication	
Number of possible connections / for open communication / by means of SEND/RECEIVE blocks / maximum	16
Data volume	
• as user data per ISO connection / for open communication / by means of SEND/RECEIVE blocks / maximum	8 Kibyte
• as user data per ISO on TCP connection / for open communication / by means of SEND/RECEIVE blocks / maximum	8 Kibyte
• as user data per TCP connection / for open communication / by means of SEND/RECEIVE blocks / maximum	8 Kibyte
• as user data per UDP connection / for open IE communication / by means of SEND/RECEIVE blocks / maximum	2 Kibyte
Number of Multicast stations	16
Performance data / S7 communication	
Number of possible connections / for S7 communication	
• maximum	16
Performance data / multi-protocol mode	
Number of active connections / with multiprotocol mode	48
Performance data / IT functions	
Number of possible connections	

subject to modifications
© Copyright Siemens AG 2014

• as client / by means of FTP / maximum	10
• as server	
• by means of FTP / maximum	2
• by means of HTTP / maximum	4
• as e-mail client / maximum	1
Amount of data / as useful data for e-mail / maximum	8 Kibyte
Storage capacity / of user memory	
• as flash memory file system	28 Mibyte
• as RAM	30 Mibyte
Number of possible write cycles / flash memory cells	100000
Performance data / PROFINET communication / as PN IO-Controller	
Number of PN IO-Devices / on PROFINET IO-Controller / usable / total	128
Number of PN IO IRT-Devices / on PROFINET IO-Controller / usable	32
Number of external PN IO lines / with PROFINET / per rack	1
Data volume	
• as useful data for input variables / as PROFINET IO controller / maximum	4 Kibyte
• as useful data for output variables / with PROFINET IO controller / maximum	4 Kibyte
• as useful data for input variables per PN IO device / with PROFINET IO controller / maximum	1433 byte
• as useful data for output variables per PN IO device / with PROFINET IO controller / maximum	1433 byte
• as user data for input variable per PN IO device / per submodule as PROFINET IO controller / maximum	240 byte
• as user data for output variables per PN IO device / per submodule as PROFINET IO controller / maximum	240 byte
Performance data / PROFINET communication / as PN IO-Device	
Product function / PROFINET IO device	Yes
Amount of data	
• as useful data for input variables / as PROFINET IO device / maximum	1024 byte
• as useful data for input variables / as PROFINET IO device / maximum	1024 byte
• as useful data for input variables / for each sub-module under PROFINET IO device	240 byte
• as useful data for input variables / for each sub-module under PROFINET IO device	240 byte
• as useful data for the consistency area for each sub-module	240 byte
Number of submodules / per PROFINET IO-Device	32
Performance data / PROFINET CBA	
Number of remote connection partners / with PROFINET CBA	64

subject to modifications
© Copyright Siemens AG 2014

Number of connections / with PROFINET CBA / total	1000
Amount of data	
• as useful data for digital inputs / with PROFINET CBA / maximum	8 Kibyte
• as useful data for digital outputs / in the case of PROFINET CBA / max.	8 Kibyte
• as useful data for arrays and data types	
• in the case of acyclic transmission / with PROFINET CBA / maximum	8 Kibyte
• with PROFINET CBA / with cyclic transmission / maximum	250 byte
• with PROFINET CBA / in the case of local interconnection / maximum	2400 byte
Performance data / PROFINET CBA / remote connection / with acyclic transmission	
Updating time / of the remote interconnections / in the case of acyclic transmission / with PROFINET CBA	100 ms
Number of remote connections to input variables / with acyclic transmission / with PROFINET CBA / maximum	128
Number of remote connections to output variables / with acyclic transmission / with PROFINET CBA / maximum	128
Amount of data	
• as useful data for remote interconnections with input variables / in the case of acyclic transmission / with PROFINET CBA	8 Kibyte
• as useful data for remote interconnections with output variables / in the case of acyclic transmission / with PROFINET CBA	8 Kibyte
Performance data / PROFINET CBA / remote connection / with cyclic transmission	
Update time / of the remote interconnections / with PROFINET CBA / with cyclic transmission	8 ms
Number of remote connections to input variables / with PROFINET CBA / with cyclic transmission / maximum	200
Number of remote connections to output variables / with PROFINET CBA / with cyclic transmission / maximum	200
Amount of data	
• as useful data for remote interconnections with input variables / with PROFINET CBA / with cyclic transmission / maximum	2000 byte
• as useful data for remote interconnections with output variables / with PROFINET CBA / with cyclic transmission / maximum	2000 byte
Performance data / PROFINET CBA / HMI variables via PROFINET / acyclic	
Number of connectable HMI stations / for HMI variables / with acyclic transmission / with PROFINET CBA	3
Updating time / of the HMI variables / in the case of acyclic transmission / with PROFINET CBA	500 ms
Number of HMI variables / with acyclic transmission / with PROFINET CBA / maximum	200

subject to modifications
© Copyright Siemens AG 2014

Amount of data / as useful data for HMI variables / in the case of acyclic transmission / with PROFINET CBA / maximum	8 Kibyte
Performance data / PROFINET CBA / device-internal connections	
Number of internal connections / with PROFINET CBA / maximum	256
Data volume / of internal connections / with PROFINET CBA / maximum	2400 byte
Performance data / PROFINET CBA / connections to constants	
Number of connections to constants / with PROFINET CBA / maximum	200
Amount of data / as useful data for interconnections with constants / in the case of PROFINET CBA / maximum	4096 byte
Performance data / PROFINET CBA / PROFIBUS proxy functionality	
Product function / with PROFINET CBA / PROFIBUS proxy functionality	No
Product functions / management, configuration	
Product function / MIB support	Yes
Protocol / is supported	
• SNMP v1	Yes
• DCP	Yes
• LLDP	Yes
Configuration software	
• for PROFINET CBA / required	SIMATIC iMap V3.0 SP1 and higher
Identification & maintenance function	
• I&M0 - device-specific information	Yes
• I&M1 – higher level designation/location designation	Yes
Product functions / Diagnosis	
Product function / Web-based diagnostics	Yes
Product functions / switch	
Product feature / switch	Yes
Product function	
• switch-managed	No
• for IRT / PROFINET IO switch	Yes
• Configuration with STEP 7	Yes
Product functions / Redundancy	
Product function	
• Ring redundancy	Yes
• Redundancy manager	Yes
• Media Redundancy Protocol (MRP)	Yes
Product functions / Security	
Product function	

subject to modifications
© Copyright Siemens AG 2014

• password protection for Web applications	Yes
• ACL - IP-based	Yes
• ACL - IP-based for PLC/routing	Yes
• switchoff of non-required services	Yes
• blocking of communication via physical ports	Yes
• log file for unauthorized access	No

Product functions / Time

Product function	
• SICLOCK support	Yes
• pass on time synchronization	Yes
Protocol / is supported / NTP	Yes

Further information / Internet Links

Internet-Link	
• to website: Industry Mall	http://www.siemens.com/industrial-controls/mall
• to website: Selector SIMATIC NET SELECTION TOOL	http://www.siemens.com/snst
• to website: Industrial communication	http://www.siemens.com/simatic-net
• to website: Information and Download Center	http://www.siemens.com/automation/net/catalog
• to website: Image database	http://automation.siemens.com/bilddb
• to website: CAx Download Manager	http://www.siemens.com/cax
• to website: Industry Online Support	http://support.automation.siemens.com

Maßzeichnung

Vorne / Front

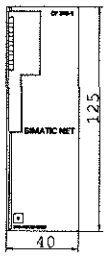

Links / Left

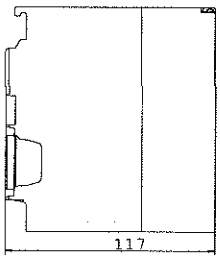

Oben / Top

letzte Änderung: Jul 7, 2014

subject to modifications
© Copyright Siemens AG 2014

Chapter 3.6

Technical Literature -

Local Operator Panel – TP-1500

SIEMENS

Product data sheet 6AV2124-0QC02-0AX0

SIMATIC HMI TP1500 COMFORT,
COMFORT PANEL, TOUCH OPERATION,
15" WIDESCREEN-TFT-DISPLAY,
16 MIL. COLORS, PROFINET INTERFACE,
MPI/PROFIBUS DP INTERFACE,
24 MB USER MEMORY, WINDOWS CE 6.0,
CONFIGURABLE FROM WINCC COMFORT V11 SP2

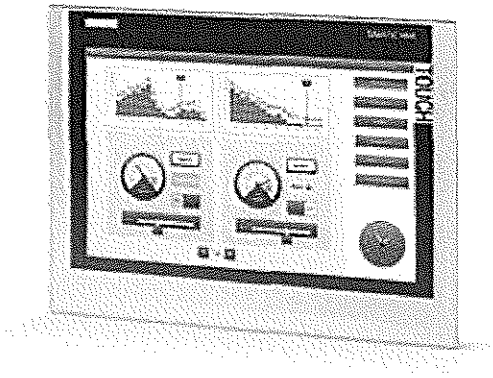

Display	
Design of display	TFT
Screen diagonal	15.4 in
Display width	331.2 mm
Display height	207 mm
Number of colors	16777216
Resolution (pixels)	
horizontal image resolution	1280
vertical image resolution	800
Backlighting	
MTBF backlighting (at 25 °C)	80000 h
Backlight dimmable	Yes ; 0-100 %
Control elements	
Keyboard fonts	
Number of function keys	0
Keys with LED	No
System keys	No
Numeric/alphabetical input	
Numeric keyboard	Yes

subject to modifications
© Copyright Siemens AG 2014

alphanumeric keyboard	Yes
Touch operation	
Design as touch screen	Yes
Expansions for operator control of the process	
Direct keys (touch buttons as S7 input I/O)	40
Installation type/mounting	
Mounting in portrait format possible	Yes
Mounting in landscape format possible	Yes
Supply voltage	
Type of supply voltage	DC
Rated value (DC)	24 V
permissible range, lower limit (DC)	19.2 V
permissible range, upper limit (DC)	28.8 V
Input current	
Current consumption (rated value)	1.5 A
Inrush current A^2s	0.5 $A^2 \cdot s$
Power	
Power consumption, typ.	36 W
Processor	
Processor type	
X86	Yes
ARM	No
Memory	
Flash	Yes
RAM	Yes
Usable memory for user data	24 Mbyte
Type of output	
Info LED	No
Power LED	No
Error LED	No
Acoustics	
Buzzer	No
Speaker	Yes
Time of day	
Clock	
Hardware clock (real-time clock)	Yes
Software clock	No
battery-backed	Yes ; Back-up duration typically 6 weeks

subject to modifications
© Copyright Siemens AG 2014

synchronizable	Yes
Interfaces	
Number of RS 485 interfaces	1 ; RS 422/485 combined
Number of USB interfaces	2 ; USB 2.0
Number of USB Mini B interfaces	1 ; 5-pole
Number of SD card slots	2
Number of parallel interfaces	0
Number of 20 mA interfaces (TTY)	0
Number of RS 232 interfaces	0
Number of RS 422 interfaces	1
Number of other interfaces	0
With software interfaces	No
Industrial Ethernet	
Number of industrial Ethernet interfaces	3
Industrial Ethernet status LED	3
Number of ports of the integrated switch	2
Protocols	
PROFINET	Yes
PROFINET IO	Yes
IRT supported	Yes ; As of WinCC V12
MRP supported	Yes
PROFIBUS	Yes
MPI	Yes
Protocols (Ethernet)	
TCP/IP	Yes
DHCP	Yes
SNMP	Yes
DCP	Yes
LLDP	Yes
WEB characteristics	
HTTP	Yes
HTTPS	Yes
HTML	Yes
XML	Yes
CSS	Yes
Active X	Yes
JavaScript	Yes
Java VM	No
Further protocols	

subject to modifications
© Copyright Siemens AG 2014

CAN	No
MODBUS	Yes
EtherNet/IP	Yes
EMC	
Emission of radio interference acc. to EN 55 011	
Emission of radio interference acc. to EN 55 011 (limit class A)	Yes
Emission of radio interference acc. to EN 55 011 (limit class B)	No
Degree and class of protection	
IP (at the front)	IP65
Enclosure Type 4 at the front	Yes
Enclosure Type 4x at the front	Yes
IP (rear)	IP20
Standards, approvals, certificates	
CE mark	Yes
KC approval	Yes
cULus	Yes
RCM (former C-TICK)	Yes
Marine approval	
Germanischer Lloyd (GL)	No
American Bureau of Shipping (ABS)	No
Bureau Veritas (BV)	No
Det Norske Veritas (DNV)	No
Lloyds Register of Shipping (LRS)	No
Nippon Kaiji Kyokai (Class NK)	No
Polski Rejestr Statkow (PRS)	No
Use in hazardous areas	
ATEX Zone 2	No
ATEX Zone 22	No
IECEx Zone 2	No
IECEx Zone 22	No
cULus Class I Zone 1	No
cULus Class I Zone 2, Division 2	Yes
FM Class I Division 2	Yes
Ambient conditions	
Mounting position	vertical
maximum permissible angle of inclination without external ventilation	35 °

subject to modifications
© Copyright Siemens AG 2014

Operating temperature	
Operation (vertical installation)	
in vertical mounting position, minimum	0 °C
in vertical mounting position, maximum	50 °C ; (55 °C, see entry ID:64847814)
Operation (max. tilt angle)	
at maximum tilt angle, minimum	0 °C
at maximum tilt angle, maximum	40 °C
Operation (vertical installation, portrait format)	
in vertical mounting position, minimum	0 °C
in vertical mounting position, maximum	40 °C
Operation (max. tilt angle, portrait format)	
at maximum tilt angle, minimum	0 °C
at maximum tilt angle, maximum	40 °C
Storage/transport temperature	
min.	-20 °C
max.	60 °C
Relative humidity	
Operation, max.	90 %
Operating systems	
Windows CE	Yes
proprietary	No
Executable with configuration operating system	
other	No
Configuration	
Message indicator	Yes
With alarm logging system (incl. buffer and acknowledgment)	Yes
Process value display (output)	Yes
Process value default (input) possible	Yes
Recipe administration	Yes
Configuration software	
STEP 7 Basic (TIA Portal)	No
STEP 7 Professional (TIA Portal)	No
WinCC flexible Compact	No
WinCC flexible Standard	No
WinCC flexible Advanced	No
WinCC Basic (TIA Portal)	No
WinCC Comfort (TIA Portal)	Yes ; V11 SP2 or higher
WinCC Advanced (TIA Portal)	Yes ; V11 SP2 or higher

subject to modifications
© Copyright Siemens AG 2014

WinCC Professional (TIA Portal)	Yes ; V11 SP2 or higher
Languages	
Online languages	
Number of online/runtime languages	32
Project languages	
Languages per project	32
Project languages	
D	Yes
GB	Yes
F	Yes
I	Yes
E	Yes
Chinese traditional	Yes
Chinese simplified	Yes
DK	Yes
FIN	Yes
GR	Yes
J	Yes
KP/ROK	Yes
NL	Yes
N	Yes
PL	Yes
P	Yes
RUS	Yes
S	Yes
CZ	Yes
SK	Yes
TR	Yes
H	Yes
Functionality under WinCC (TIA Portal)	
Libraries	Yes
Applications/options	
Internet Explorer	Yes
Pocket Word	Yes
Pocket Excel	Yes
PDF Viewer	Yes
Media Player	Yes
SIMATIC WinCC Sm@rtServer	Yes
SIMATIC WinCC Audit	Yes

subject to modifications
© Copyright Siemens AG 2014

Number of Visual Basic Scripts	Yes
Task planner	
time-controlled	Yes
task-controlled	Yes
Help system	
Number of characters per info text	320
Message system	
Number of alarm classes	32
Number of bit messages	6000
Number of analog messages	200
S7 alarm number procedure	Yes
System messages HMI	Yes
System messages, other (SIMATIC S7, Sinumerik, Simotion, etc.)	Yes
Number of characters per message	80
Number of process values per message	8
Acknowledgment groups	Yes
Message indicator	Yes
Message buffer	
Number of entries	1024
Circulating buffer	Yes
retentive	Yes
maintenance-free	Yes
Recipe administration	
Number of recipes	500
Data records per recipe	1000
Entries per data record	2000
Size of internal recipe memory	4 Mbyte
Recipe memory expandable	Yes
Variables	
Number of variables per device	4096
Number of variables per screen	400
Limit values	Yes
Multiplexing	Yes
Structures	Yes
Arrays	Yes
Images	
Number of configurable images	750
Permanent window/default	Yes

subject to modifications
© Copyright Siemens AG 2014

Global image	Yes
Start screen configurable	Yes
Image selection by PLC	Yes
Image number in the PLC	Yes
Image objects	
Number of objects per image	600
Text fields	Yes
I/O fields	Yes
Graphic I/O fields (graphics list)	Yes
Symbolic I/O fields (text list)	Yes
Date/time fields	Yes
Switch	Yes
Buttons	Yes
Graphic display	Yes
Icons	Yes
Geometric objects	Yes
Complex image objects	
Number of complex objects per screen	40
Alarm view	Yes
Trend view	Yes
User view	Yes
Status/control	Yes
Sm@rtClient view	Yes
Recipe view	Yes
f(x) trend view	Yes
System diagnostics view	Yes
Media Player	Yes
Bar graphs	Yes
Sliders	Yes
Pointer instruments	Yes
Analog/digital clock	Yes
Lists	
Number of text lists per project	500
Number of entries per text list	500
Number of graphics lists per project	500
Number of entries per graphics list	500
Archiving	
Number of archives per device	50
Number of entries per archive	50000

subject to modifications
© Copyright Siemens AG 2014

Message archive	Yes
Process value archive	Yes
Archiving methods	
Sequential archive	Yes
Short-term archive	Yes
Memory location	
Memory card	Yes
USB memory	Yes
Ethernet	Yes
Data storage format	
CSV	Yes
TXT	Yes
RDB	Yes
Security	
Number of user groups	50
Number of user rights	32
Number of users	50
Password export/import	Yes
SIMATIC Logon	Yes
Logging through printer	
Alarms	Yes
Report (shift log)	Yes
Hardcopy	Yes
Electronic print to file	Yes ; pdf, html
Character sets	
Keyboard fonts	
US English	Yes
Fonts	
Tahoma	Yes
Arial	Yes
Courier New	Yes
WinCC flexible Standard	Yes
Ideographic languages	Yes
Font size freely scalable	Yes
Additional character sets can be loaded	Yes
Transfer (upload/download)	
MPI/PROFIBUS DP	Yes
USB	Yes
Ethernet	Yes

subject to modifications
© Copyright Siemens AG 2014

using external storage medium	No
Process coupling	
S7-1200	Yes
S7-1500	Yes
S7-200	Yes
S7-300/400	Yes
LOGO!	Yes
WinAC	Yes
SINUMERIK	Yes
SIMOTION	No , With WinCC, subsequent version
Allen Bradley (EtherNet/IP)	Yes
Allen Bradley (DF1)	Yes
Mitsubishi (MC TCP/IP)	Yes
Mitsubishi (FX)	Yes
OMRON (FINS TCP)	No
OMRON (LINK/Multilink)	Yes
Modicon (Modbus TCP/IP)	Yes
Modicon (Modbus)	Yes
OPC UA Client	Yes
OPC UA Server	No
Service tools/configuration aids	
Clean screen	Yes
Touch calibration	Yes
Backup/Restore manually	Yes
Backup/Restore automatically	Yes
Simulation	Yes
Device switchover	Yes
Delta transfer	Yes
I/O/Options	
I/O devices	
Printer	Yes
Multimedia Card	Yes
SD card	Yes
USB memory	Yes
Network camera	Yes
Mechanics/material	
Type of housing (front)	
Plastic	No
Aluminum	Yes

subject to modifications
© Copyright Siemens AG 2014

Stainless steel	No
Dimensions	
Width of the housing front	415 mm
Height of housing front	310 mm
Mounting cutout/device depth (W x H x D)	
Mounting cutout, width	396 mm
Mounting cutout, height	291 mm
Overall depth	75 mm
Weights	
Weight without packaging	5.2 kg
Status	Jul 7, 2014

subject to modifications
© Copyright Siemens AG 2014

Chapter 3.7

Technical Literature -

Digital Input Signal Module SM321

SIEMENS

Product data sheet 6ES7321-1BL00-0AA0

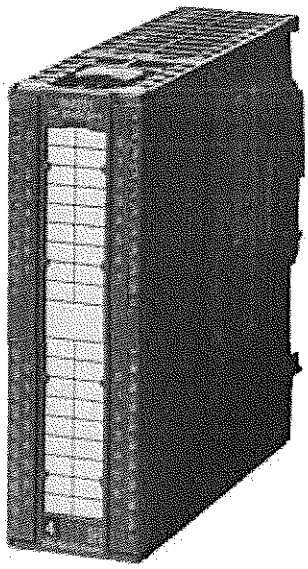

SIMATIC S7-300, DIGITAL INPUT SM 321, OPTICALLY ISOLATED 32DI, 24 V DC, 1 X 40 PIN

-

Supply voltage	
Load voltage L+	
Rated value (DC)	24 V
permissible range, lower limit (DC)	20.4 V
permissible range, upper limit (DC)	28.8 V
Input current	
from backplane bus 5 V DC, max.	15 mA
Power loss	
Power loss, typ.	6.5 W
Digital inputs	
Number of digital inputs	32
Input characteristic curve in accordance with IEC 61131, type 1	Yes
Number of simultaneously controllable inputs	
horizontal installation	
up to 40 °C, max.	32
up to 60 °C, max.	16
vertical installation	
up to 40 °C, max.	32

subject to modifications
© Copyright Siemens AG 2014

Input voltage	
Type of input voltage	DC
Rated value, DC	24 V
for signal "0"	-30 to +5 V
for signal "1"	13 to 30 V
Input current	
for signal "1", typ.	7 mA
Input delay (for rated value of input voltage)	
for standard inputs	
parameterizable	No
at "0" to "1", min.	1.2 ms
at "0" to "1", max.	4.8 ms
Cable length	
Cable length, shielded, max.	1000 m
Cable length unshielded, max.	600 m
Encoder	
Connectable encoders	
2-wire sensor	Yes
permissible quiescent current (2-wire sensor), max.	1.5 mA
Isochronous mode	
Isochronous mode (application synchronized up to terminal)	No
Interrupts/diagnostics/status information	
Alarms	
Alarms	No
Diagnostic alarm	No
Hardware interrupt	No
Diagnostic messages	
Diagnostic functions	No
Diagnostics indication LED	
Status indicator digital input (green)	Yes
Galvanic isolation	
Galvanic isolation digital inputs	
between the channels	No
between the channels, in groups of	16
between the channels and the backplane bus	Yes ; Optocoupler
Permissible potential difference	
between different circuits	75 VDC / 60 VAC
Isolation	

subject to modifications
© Copyright Siemens AG 2014

Isolation tested with	500 V DC
Connection method	
required front connector	40-pin
Dimensions	
Width	40 mm
Height	125 mm
Depth	120 mm
Weights	
Weight, approx.	260 g
Status	Jul 7, 2014

subject to modifications
© Copyright Siemens AG 2014

Chapter 3.8

Technical Literature -

Digital Output Signal Module SM322

SIEMENS

Product data sheet 6ES7322-1HF10-0AA0

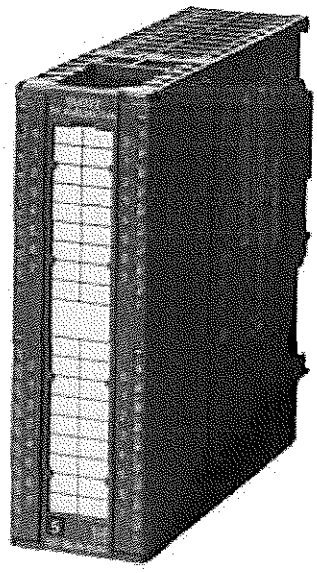

SIMATIC S7-300, DIGITAL OUTPUT SM 322,
OPTICALLY ISOLATED, 8 DO (RELAY),
1 X 40 PIN, 24V DC, 5A OR 230V AC, 5A,
CONNECTOR W.SPRING TERMINAL CAN BE USED
FROM 6ES7392-1BM01-0AA0

Supply voltage	
Load voltage L+	
Rated value (DC)	120 V
Load voltage L1	
Rated value (AC)	230 V
Input current	
from backplane bus 5 V DC, max.	40 mA
Power loss	
Power loss, typ.	4.2 W
Digital outputs	
Number of digital outputs	8 ; Relays
Switching capacity of the outputs	
Lamp load, max.	1500 W ; 230 V AC
Output current	
for signal "1" rated value	5 A
for signal "1" minimum load current	5 mA
Switching frequency	
with resistive load, max.	2 Hz

subject to modifications
© Copyright Siemens AG 2014

with inductive load, max.	0.5 Hz
on lamp load, max.	2 Hz
mechanical, max.	10 Hz
Total current of the outputs (per group)	
horizontal installation	
up to 60 °C, max.	5 A
vertical installation	
up to 40 °C, max.	5 A
Relay outputs	
Rated input voltage of relay coil L+ (DC)	24 V
Number of operating cycles, max.	300000 ; 300000 (24 V DC, at 2 A); 200000 (120 V AC, at 3 A); 100000 (230 V AC, at 3 A)
Switching capacity of contacts	
with inductive load, max.	3 A ; 3 A (230 V DC); 2 A (24 V AC)
with resistive load, max.	8 A ; 8 A (230 V DC); 5 A (24 V AC)
Cable length	
Cable length, shielded, max.	1000 m
Cable length unshielded, max.	600 m
Interrupts/diagnostics/status information	
Alarms	
Diagnostic alarm	No
Diagnostic messages	
Diagnostics	No
Wire-break	No
Short-circuit	No
Fuse blown	No
missing load voltage	No
Diagnostics indication LED	
Rated load voltage PWR (green)	No
Fuse OK FSG (green)	No
Galvanic isolation	
Galvanic isolation digital outputs	
between the channels, in groups of	1
between the channels and the backplane bus	Yes ; Optocoupler
Isolation	
Isolation tested with	2000 V AC
Connection method	
required front connector	40-pin

subject to modifications
© Copyright Siemens AG 2014

Dimensions	
Width	40 mm
Height	125 mm
Depth	120 mm
Weights	
Weight, approx.	320 g
Status	Jul 7, 2014

subject to modifications
© Copyright Siemens AG 2014

Chapter 3.9

Technical Literature -

Analog Input Signal Module SM331

SIEMENS

Product data sheet **6ES7331-7KF02-0AB0**

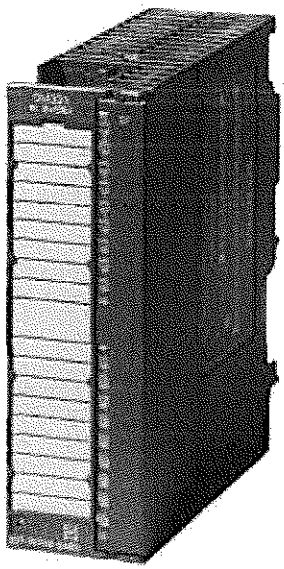

SIMATIC S7-300, ANALOG INPUT SM 331,
OPTICALLY ISOLATED, 8AI,
RESOLUTION 9/12/14 BITS,
U/I/THERMOCOUPLE/RESISTANCE INTERRUPT,
DIAGNOSTICS;
1X20PIN REMOVE/INSERT W. BACKPLANE BUS

Supply voltage	
Load voltage L+	
Rated value (DC)	24 V
Reverse polarity protection	Yes
Input current	
from load voltage L+ (without load), max.	200 mA
from backplane bus 5 V DC, max.	50 mA
Power loss	
Power loss, typ.	1 W
Analog inputs	
Number of analog inputs	8
Number of analog inputs for resistance measurement	4
permissible input voltage for voltage input (destruction limit), max.	20 V ; continuous; 75 V for max. 1 s (mark to space ratio 1:20)
permissible input current for current input (destruction limit), max.	40 mA
Input ranges	
Voltage	Yes
Current	Yes
Thermocouple	Yes
Resistance thermometer	Yes

subject to modifications
© Copyright Siemens AG 2014

Resistance	Yes
Input ranges (rated values), voltages	
0 to +10 V	No
1 to 5 V	Yes
Input resistance (1 to 5 V)	100 kΩ
1 to 10 V	No
-1 V to +1 V	Yes
Input resistance (-1 V to +1 V)	10 MΩ
-10 V to +10 V	Yes
Input resistance (-10 V to +10 V)	100 kΩ
-2.5 V to +2.5 V	Yes
Input resistance (-2.5 V to +2.5 V)	100 kΩ
-250 mV to +250 mV	Yes
Input resistance (-250 mV to +250 mV)	10 MΩ
-5 V to +5 V	Yes
Input resistance (-5 V to +5 V)	100 kΩ
-50 mV to +50 mV	No
-500 mV to +500 mV	Yes
Input resistance (-500 mV to +500 mV)	10 MΩ
-80 mV to +80 mV	Yes
Input resistance (-80 mV to +80 mV)	10 MΩ
Input ranges (rated values), currents	
0 to 20 mA	Yes
Input resistance (0 to 20 mA)	25 Ω
-10 to +10 mA	Yes
Input resistance (-10 to +10 mA)	25 Ω
-20 to +20 mA	Yes
Input resistance (-20 to +20 mA)	25 Ω
-3.2 to +3.2 mA	Yes
Input resistance (-3.2 to +3.2 mA)	25 Ω
4 to 20 mA	Yes
Input resistance (4 to 20 mA)	25 Ω
Input ranges (rated values), thermocouples	
Type B	No
Type E	Yes
Input resistance (Type E)	10 MΩ
Type J	Yes
Input resistance (type J)	10 MΩ
Type K	Yes

subject to modifications
© Copyright Siemens AG 2014

Input resistance (Type K)	10 MΩ
Type L	Yes
Input resistance (Type L)	10 MΩ
Type N	Yes
Input resistance (Type N)	10 MΩ
Type R	No
Type S	No
Type T	No
Type U	No
Type TXK/TXK(L) acc. GOST	No
Input ranges (rated values), resistance thermometers	
Cu 10	No
Ni 100	Yes ; Standard
Input resistance (Ni 100)	10 MΩ
Ni 1000	No
LG-Ni 1000	No
Ni 120	No
Ni 200	No
Ni 500	No
Pt 100	Yes ; Standard
Input resistance (Pt 100)	10 MΩ
Pt 1000	No
Pt 200	No
Pt 500	No
Input ranges (rated values), resistors	
0 to 150 Ohm	Yes
Input resistance (0 to 150 Ohm)	10 MΩ
0 to 300 Ohm	Yes
Input resistance (0 to 300 Ohm)	10 MΩ
0 to 600 Ohm	Yes
Input resistance (0 to 600 Ohm)	10 MΩ
0 to 6000 Ohm	No
Thermocouple (TC)	
Characteristic linearization	
for thermocouples	Type E, J, K, L, N
Temperature compensation	
parameterizable	Yes
internal temperature compensation	Yes

subject to modifications
© Copyright Siemens AG 2014

external temperature compensation with compensations socket	Yes
Resistance thermometer (RTD)	
Characteristic linearization	
for resistance thermometer	Pt100 (standard, climatic range), Ni100 (standard, climatic range)
Characteristic linearization	
parameterizable	Yes
Cable length	
Cable length, shielded, max.	200 m ; 50 m at 80 mV and thermocouples
Analog value generation	
Measurement principle	integrating
Integration and conversion time/resolution per channel	
Resolution with overrange (bit including sign), max.	15 bit ; Unipolar: 9/12/12/14 bits; bipolar: 9 bits + sign/12 bits + sign/12 bits + sign/14 bits + sign
Integration time, parameterizable	Yes ; 2,5 / 16,67 / 20 / 100 ms
Basic conversion time, ms	3 / 17 / 22 /102 ms
Interference voltage suppression for interference frequency f1 in Hz	400 / 60 / 50 / 10 Hz
Encoder	
Connection of signal encoders	
for current measurement as 2-wire transducer	Yes
for current measurement as 4-wire transducer	Yes
for resistance measurement with two-wire connection	Yes
for resistance measurement with three-wire connection	Yes
for resistance measurement with four-wire connection	Yes
Errors/accuracies	
Operational error limit in overall temperature range	
Voltage, relative to input area, (+/-)	1 % ; +/-1% (80 mV); +/-0.6% (250 to 1000 mV); +/-0.8% (2.5 to 10 V)
Current, relative to input area, (+/-)	0.7 % ; From 3.2 to 20 mA
Resistance, relative to input area, (+/-)	0.7 % ; 150, 300, 600 Ohm
Resistance thermometer, relative to input area, (+/-)	0.7 % ; +/-0.7% (Pt100/ Ni100); +/-0.8% (Pt100 climate)
Basic error limit (operational limit at 25 °C)	
Voltage, relative to input area, (+/-)	0.6 % ; +/-0.4% (250 to 1000 mV); +/-0.6 % (2.5 to 10 mV); +/-0.7 % (80 mV)
Current, relative to input area, (+/-)	0.5 % ; 3.2 to 20 mA
Resistance, relative to input area, (+/-)	0.5 % ; 150, 300, 600 Ohm
Resistance thermometer, relative to input area, (+/-)	0.6 % ; +/-0.5% (Pt100/ Ni100); +/-0.6% (Pt100 climate)
Isochronous mode	
Isochronous mode (application synchronized up to terminal)	No

subject to modifications
© Copyright Siemens AG 2014

Interrupts/diagnostics/status information	
Alarms	
Diagnostic alarm	Yes ; Parameterizable, channels 0 and 2
Limit value alarm	Yes ; Parameterizable
Diagnostic messages	
Diagnostic functions	Yes ; Parameterizable
Diagnostic information readable	Yes
Diagnostics	Yes
Diagnostics indication LED	
Group error SF (red)	Yes
Galvanic isolation	
Galvanic isolation analog inputs	
between the channels	No
between the channels and the backplane bus	Yes
Isolation	
Isolation tested with	500 V DC
Connection method	
required front connector	20-pin
Dimensions	
Width	40 mm
Height	125 mm
Depth	120 mm
Weights	
Weight, approx.	250 g
Status	Jul 7, 2014

subject to modifications
© Copyright Siemens AG 2014

SIEMENS

Product data sheet 6ES7331-7TF01-0AB0

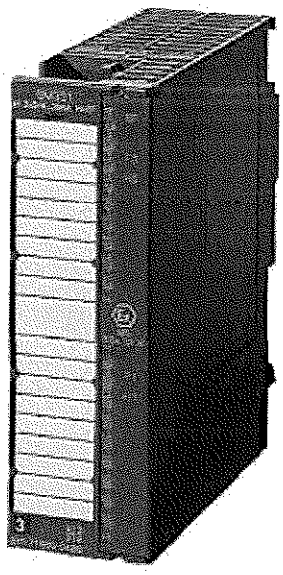

SIMATIC DP, HART ANALOG INPUT SM 331,
8 AI, 0/4 - 20MA HART,
FOR ET200M WITH IM153-2, 1 X 20-POLE,
FEATURES: FW UPDATE,
HART SECONDARY VARIABLES, REDUNDANCY,
LOCAL DIAGNOSTIC BUFFER WITH TIMESTAMP,

-

Supply voltage	
Load voltage L+	
Rated value (DC)	24 V
Reverse polarity protection	Yes
Input current	
from load voltage L+ (without load), max.	20 mA
from backplane bus 5 V DC, max.	120 mA
Output voltage	
Power supply to the transmitters	
present	Yes
Rated value (DC)	24 V
short-circuit proof	Yes
Power loss	
Power loss, typ.	1.5 W
Analog inputs	
Number of analog inputs	8
permissible input current for current input (destruction limit), max.	40 mA
Input ranges	

subject to modifications
© Copyright Siemens AG 2014

Voltage	No
Current	Yes
Thermocouple	No
Resistance thermometer	No
Resistance	No
Inputranges (rated values), currents	
0 to 20 mA	Yes
Input resistance (0 to 20 mA)	240 Ω
Input resistance (-20 to +20 mA)	240 Ω
Input resistance (4 to 20 mA)	240 Ω
Cable length	
Cable length, shielded, max.	800 m
Analog value generation	
Measurement principle	Sigma Delta
Integration and conversion time/resolution per channel	
Resolution with overrange (bit including sign), max.	16 bit
Integration time, parameterizable	Yes
Integration time, ms	20 ms@50 Hz/16.6 ms@60 Hz/100 ms@100 Hz
Basic conversion time, including integration time, ms	65ms@50Hz / 55ms@60Hz / 305ms@100Hz
Interference voltage suppression for interference frequency f1 in Hz	60 / 50 / 10 Hz
Encoder	
Connection of signal encoders	
for current measurement as 2-wire transducer	Yes
for current measurement as 4-wire transducer	Yes
Errors/accuracies	
Linearity error (relative to input range), (+/-)	0.01 %
Temperature error (relative to input range), (+/-)	0.0010 %/K
Crosstalk between the inputs, min.	70 dB
Repeat accuracy in steady state at 25 °C (relative to input area), (+/-)	0.1 %
Operational error limit in overall temperature range	
Current, relative to input area, (+/-)	0.15 %
Basic error limit (operational limit at 25 °C)	
Current, relative to input area, (+/-)	0.1 %
Interference voltage suppression for f = n x (f1 +/- 1 %), f1 = interference frequency	
Series mode interference (peak value of interference < rated value of input range), min.	40 dB
Common mode interference, min.	100 dB

subject to modifications
© Copyright Siemens AG 2014

Isochronous mode	
Isochronous mode (application synchronized up to terminal)	No
Interrupts/diagnostics/status information	
Alarms	
Diagnostic alarm	Yes
Limit value alarm	Yes
Diagnostic messages	
Diagnostic functions	Yes
Diagnostic information readable	Yes
Diagnostics	Yes
Group error	Yes
Diagnostics indication LED	
Group error SF (red)	Yes
Galvanic isolation	
Galvanic isolation analog inputs	
between the channels	No
between the channels, in groups of	8
between the channels and the backplane bus	Yes
Isolation	
Isolation tested with	500
Connection method	
required front connector	20-pin
Dimensions	
Width	40 mm
Height	125 mm
Depth	117 mm
Weights	
Weight, approx.	205 g
Status	Jul 7, 2014

subject to modifications
© Copyright Siemens AG 2014

Chapter 3.10

Technical Literature -

Analog Output Signal Module SM332

SIEMENS

Datasheet 6ES7332-7ND02-0AB0

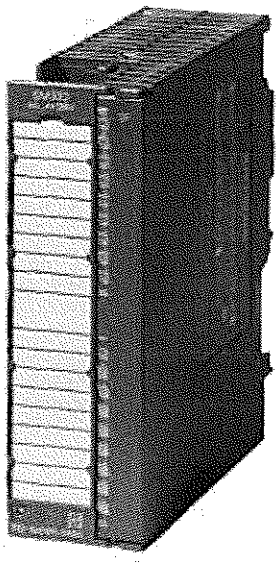

SIMATIC S7,SM 332 ANALOG OUTPUT CHANNEL TO CHANNEL ISOLATION, 4 AO, 16 BIT RESOLUTION, 0-10V, 1-5V, +/-10V, +/-20MA, 0/4 - 20MA, 20 PIN, FIT FOR ISOCHRONE MODE IMPROVED DP-CYCLE TIME FOR ISOCHRONE MODE

Supply voltage	
Load voltage L+	
• Rated value (DC)	24 V
Input current	
from load voltage L+ (without load), max.	290 mA
from backplane bus 5 V DC, max.	120 mA
Power losses	
Power loss, typ.	3 W
Analog outputs	
Number of analog outputs	4; Isochronous mode
Voltage output, short-circuit protection	Yes
Voltage output, short-circuit current, max.	40 mA
Current output, no-load voltage, max.	18 V
Output ranges, voltage	
• 0 to 10 V	Yes
• 1 to 5 V	Yes

Changes preserved
© Copyright Siemens AG

• -10 to +10 V	Yes
Output ranges, current	
• 0 to 20 mA	Yes
• -20 to +20 mA	Yes
• 4 to 20 mA	Yes
Load impedance (in rated range of output)	
• with voltage outputs, min.	1 kΩ
• with voltage outputs, capacitive load, max.	1 µF
• with current outputs, max.	500 Ω
• with current outputs, inductive load, max.	1 mH
Cable length	
• Cable length, shielded, max.	200 m
Analog value creation	
Integration and conversion time/resolution per channel	
• Resolution with overrange (bit including sign), max.	16 bit
• Conversion time (per channel)	200 µs; in isochronous mode 640 µs
Settling time	
• for resistive load	0.2 ms
• for capacitive load	3.3 ms
• for inductive load	0.5 ms
Errors/accuracies	
Operational limit in overall temperature range	
• Voltage, relative to output area, (+/-)	0.12 %
• Current, relative to output area, (+/-)	0.18 %
Basic error limit (operational limit at 25 °C)	
• Voltage, relative to output area, (+/-)	0.02 %
• Current, relative to output area, (+/-)	0.02 %
Interrupts/diagnostics/status information	
Substitute values connectable	Yes; Parameterizable
Alarms	
• Diagnostic alarm	Yes; Parameterizable
Diagnostic messages	
• Diagnostic information readable	Yes
• Diagnostics	Yes; Diagnostic information readable
Diagnostics indication LED	
• Group error SF (red)	Yes

Changes preserved
© Copyright Siemens AG

Galvanic isolation	
Galvanic isolation analog outputs	
• between the channels and the backplane bus	Yes
Isolation	
Isolation checked with	1500 V DC
Connection method	
required front connector	20-pin
Dimensions	
Width	40 mm
Height	125 mm
Depth	120 mm
Weights	
Weight, approx.	220 g
last modified:	08.09.2014

Changes preserved
© Copyright Siemens AG

Chapter 3.11

Technical Literature -

Power Supply Module PS-307

SIEMENS

Product data sheet 6ES7307-1KA02-0AA0

SIMATIC S7-300 STABILIZED POWER SUPPLY PS307
INPUT: 120/230 V AC OUTPUT: DC 24 V DC/10 A

Technical specifications	
Product	PS 307
Power supply, type	24 V/10 A
Input	
Input	1-phase AC
Supply voltage / 1 / at AC / nominal value	120 V
Supply voltage / 2 / at AC / nominal value	230 V
Voltage range	
• Note	Automatic range selection
Input voltage / 1 / at AC	85 ... 132 V
Input voltage / 2 / at AC	170 ... 264 V
Wide-range input	No
Overvoltage resistance	2.3 × Vin rated, 1.3 ms
Mains buffering at Iout rated, min.	20 ms
Mains buffering	at Vin = 93/187 V
Rated line frequency	50 / 60 Hz
Rated line range	47 ... 63 Hz
Input current / at nominal level of the input voltage 120 V	4.2 A
Input current / at nominal level of the input voltage 230 V	1.9 A
Switch-on current limiting (+25 °C), max.	55 A
Duration of current limiting / at 25 °C / maximum	3 ms

subject to modifications
© Copyright Siemens AG 2014

I^2t, max.	3.3 A^2 s
Built-in incoming fuse	T 6.3 A/250 V (not accessible)
Protection in the mains power input (IEC 898)	Recommended miniature circuit breaker: from 10 A characteristic C
Output	
Output	Controlled, isolated DC voltage
Rated voltage Vout DC	24 V
Total tolerance, static ±	3 %
Static mains compensation, approx.	0.1 %
Static load balancing, approx.	0.5 %
Residual ripple peak-peak, max.	50 mV
Residual ripple peak-peak, typ.	15 mV
Spikes peak-peak, max. (bandwidth: 20 MHz)	150 mV
Spikes peak-peak, typ. (bandwidth: 20 MHz)	60 mV
Product feature / output voltage adjustable	No
Output voltage setting	-
Status display	Green LED for 24 V OK
On/off behavior	No overshoot of Vout (soft start)
Startup delay, max.	2 s
Voltage rise, typ.	10 ms
Rated current value Iout rated	10 A
Current range	0 ... 10 A
delivered active power / typ.	240 W
short-term overload current / at short-circuit during run-up / typical	38 A
Duration of overloading ability for excess current / on short-circuiting during the start-up	80 ms
short-term overload current / at short-circuit during operation / typical	38 A
Duration of overloading ability for excess current / on short-circuiting during the operational phase	80 ms
Parallel switching for enhanced performance	Yes
Efficiency	
Efficiency at Vout rated, Iout rated, approx.	90 %
Power loss at Vout rated, Iout rated, approx.	27 W
Closed-loop control	
Dynamic mains compensation (Vin rated ±15 %), max.	0.1 %
Dynamic load smoothing (Iout: 50/100/50 %), Uout ± typ.	2 %
Setting time / maximum	0.1 ms
Protection and monitoring	
Output overvoltage protection	Additional control loop, shutdown at < 28.8 V, automatic restart
Current limitation	11 ... 12 A
Characteristic feature of the output / short-circuit protected	Yes

subject to modifications
© Copyright Siemens AG 2014

Short-circuit protection	Electronic shutdown, automatic restart
Enduring short circuit current / Effective level / maximum	12 A
Overload/short-circuit indicator	-
Safety	
Primary/secondary isolation	Yes
Potential separation	Safety extra-low output voltage Uout acc. to EN 60950-1 and EN 50178
Protection class	Class I
stray current / maximum	3.5 mA
stray current / typical	0.6 mA
CE mark	Yes
UL/CSA approval	Yes
UL/cUL (CSA) approval	cULus-Listed (UL 508, CSA C22.2 No. 142), File E143289
Explosion protection	ATEX (EX) II 3G Ex nA II T4; cULus (ISA 12.12.01, CSA C22.2 No.213) Class I, Div. 2, Group ABCD, T4, File E330455
FM approval	Class I, Div. 2, Group ABCD, T4
CB approval	No
Marine approval	In S7-300 system
Degree of protection (EN 60529)	IP20
EMC	
Emitted interference	EN 55022 Class B
Supply harmonics limitation	EN 61000-3-2
Noise immunity	EN 61000-6-2
Operating data	
Ambient temperature / in operation	0 ... 60 °C
• Note	with natural convection
Ambient temperature / on transport	-40 ... +85 °C
Ambient temperature / in storage	-40 ... +85 °C
Humidity class according to EN 60721	Climate class 3K3, no condensation
Mechanics	
Connection technology	screw-type terminals
Connections / Supply input	L, N, PE: 1 screw terminal each for 0.5 ... 2.5 mm² single-core/finely stranded
Connections / Output	L+, M: 4 screw terminals each for 0.5 ... 2.5 mm²
Connections / Auxiliary	-
Width / of the housing	80 mm
Height / of the housing	125 mm
Depth / of the housing	120 mm
Installation width	80 mm
Mounting height	205 mm

subject to modifications
© Copyright Siemens AG 2014

Weight, approx.	0.8 kg
Product feature / of the housing / housing for side-by-side mounting	Yes
Mounting type / wall mounting	No
Type of mounting / standard rail mounting	No
Mounting type / S7 rail mounting	Yes
Installation	Can be mounted onto S7 rail
Mechanical accessories	Mounting adapter for standard mounting rail (6EP1971-1BA00)
Other information	Specifications at rated input voltage and ambient temperature +25 °C (unless otherwise specified)

letzte Änderung: Jul 7, 2014

subject to modifications
© Copyright Siemens AG 2014

Chapter 3.12

Technical Literature - Industrial Ethernet Switch

SIEMENS

Product data sheet 6GK5408-8GR00-2AM2

Product-type designation	SCALANCE XM408-8C
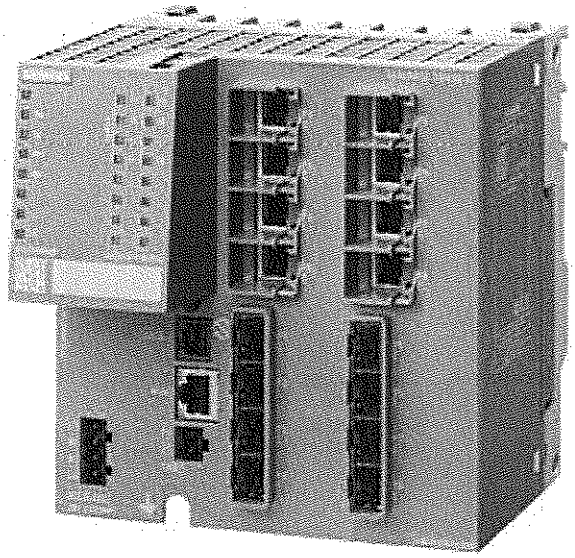	SCALANCE XM408-8C; MANAGED MODULAR IE SWITCH; LAYER 3 INTEGRATED; 8 X 10/100/1000 MBIT/S RJ45; 8 X 100/1000 MBIT/S SFP; CONTAINS 8 COMBO PORTS; USABLE 8 PORTS IN TOTAL; EXPANDABLE TO 24 PORTS ELEKTRICAL OR OPTICAL; MOUNTING DIN-/S7-PROFILE-RAIL; PROFINET-IO DEVICE; REDUNDANCY FUNCTIONS; OFFICE FEATURES (RSTP, VLAN, IGMP,..); C-PLUG IN SCOPE OF SUPPLY

Transmission rate	
Transfer rate / 1	10 Mbit/s
Transfer rate / 2	100 Mbit/s
Transfer rate / 3	1000 Mbit/s

Interfaces	
Number of electrical/optical connections / for network components or terminal equipment / maximum	24
Number of electrical connections	
• for network components and terminal equipment	8
• with extender modules	16
• for operator console	1
• for signaling contact	1
• for power supply	1
• for redundant power supply	1
Design of electrical connection	
• for network components and terminal equipment	RJ45 port
• with extender modules	RJ45 port
• for operator console	RJ11 port
• for signaling contact	2-pole terminal block
• for power supply	4-pole terminal block

subject to modifications
© Copyright Siemens AG 2014

Number of optical interfaces / for optical waveguide	
• at 100 Mbit/s	8
• at 1000 Mbit/s	8
• with extender modules	16
Design of optical interface / for optical waveguide	
• at 100 Mbit/s	SFP slot
• at 1000 Mbit/s	SFP slot
• with extender modules	SFP slot
Number of extender expansion interfaces	2
Signal inputs/outputs	
Operating voltage / of signaling contacts / at DC / rated value	24 V
Operating current / of signaling contacts / at DC / maximum	0.1 A
Supply voltage, current consumption, power loss	
Type of / supply voltage	DC
Supply voltage / external	24 V
• minimum	19.2 V
• maximum	28.8 V
Product component / fusing at power supply input	Yes
Type of fusing / at input for supply voltage	F 15 A / 125 V
Consumed current / maximum	2 A
Active power loss	
• at 24 V / for DC	48 W
Permitted ambient conditions	
Ambient temperature	
• during operating	-40 ... +70 °C
• during storage	-40 ... +85 °C
• during transport	-40 ... +85 °C
Relative humidity / at 25 °C / without condensation / during operating / maximum	95 %
Protection class IP	IP20
Design, dimensions and weight	
Design	SIMATIC S7-1500 device design
Width	140 mm
Height	147 mm
Depth	125 mm
Net weight	1.15 kg
Mounting type	
• 35 mm DIN rail mounting	Yes
• wall mounting	No
• S7-300 rail mounting	Yes

subject to modifications
© Copyright Siemens AG 2014

• S7-1500 rail mounting	Yes
Product properties, functions, components / general	
Cascading in cases of star structuring	Any (depending only on signal propagation time)
Product function	
• CLI	Yes
• web-based management	Yes
• MIB support	Yes
• TRAPs via email	Yes
• Configuration with STEP 7	Yes
• RMON	Yes
• Port mirroring	Yes
• CoS	Yes
• PROFINET IO diagnosis	Yes
• switch-managed	Yes
Protocol / is supported	
• Telnet	Yes
• HTTP	Yes
• HTTPS	Yes
• TFTP	Yes
• FTP	Yes
• BOOTP	Yes
• SNMP v1	Yes
• SNMP v2	Yes
• SNMP v3	Yes
• IGMP (snooping/querier)	Yes
• GMRP	Yes
• DCP	Yes
• LLDP	Yes
Identification & maintenance function	
• I&M0 - device-specific information	Yes
• I&M1 – higher level designation/location designation	Yes
Product functions / Diagnosis	
Product function	
• Port diagnostics	Yes
• Statistics Packet Size	Yes
• Statistics packet type	Yes
• Error statistics	Yes
• SysLog	Yes
Product functions / VLAN	

subject to modifications
© Copyright Siemens AG 2014

Product function	
• VLAN - port based	Yes
• VLAN dynamic	Yes
Number of VLANs / maximum	255
Number of VLANs - dynamic / maximum	255
Protocol / is supported / GVRP	Yes
Product functions / DHCP	
Product function	
• DHCP client	Yes
• DHCP Option 82	Yes
• DHCP Option 66	Yes
• DHCP Option 67	Yes
Product functions / Routing	
Service / Routing / Note	IP routing integrated, IPv6 available soon
Product function	
• static IP routing	Yes
• dynamic IP routing	Yes
Protocol / is supported	
• RIPv2	Yes
• OSPFv2	Yes
• VRRP	Yes
Product functions / Redundancy	
Product function	
• Ring redundancy	Yes
• Redundancy manager	Yes
• Standby redundancy	Yes
• High Speed Redundancy Protocol (HRP)	Yes
• Media Redundancy Protocol (MRP)	Yes
• redundancy procedure STP	Yes
• redundancy procedure RSTP	Yes
• redundancy procedure MSTP	Yes
• Passive listening	Yes
Protocol / is supported	
• LACP	Yes
Product functions / Security	
Product function	
• ACL - MAC-based	Yes
• ACL - port/MAC-based	Yes
• IEEE 802.1X (radius)	Yes

subject to modifications
© Copyright Siemens AG 2014

• Broadcast/Multicast/Unicast Limiter	Yes
• broadcast blocking	Yes
Protocol / is supported / SSH	Yes
Product functions / Time	
Product function / SICLOCK support	Yes
Protocol / is supported	
• NTP	Yes
• SNTP	Yes
Standards, specifications, approvals	
Standard	
• for EMC / from FM	FM3611: Class 1, Division 2, Group A, B, C, D / T4, Class 1, Zone 2, Group IIC, T4
• for hazardous zone	EN 60079-0: 2009, EN60079-15: 2010, II 3 G Ex nA IIC T4 Gc, KEMA 07 ATEX 0145 X
• for safety / of CSA and UL	UL 60950-1, CSA C22.2 No. 60950-1-03
• for hazardous area / of CSA and UL	ISA 12.12.01-2012 (Hazardous Location), Class 1 / Division 2 / Group A, B, C, D / T4, Class 1 / Zone 2 / Group IIC / T4
• for emitted interference	EN 61000-6-4 (Class A)
• for interference immunity	EN 61000-6-2
Verification of suitability	EN 61000-6-2, EN 61000-6-4
• CE mark	Yes
• C-Tick	Yes
• KC approval	No
Further Information / Internet Links	
Internet-Link	
• to website: Industry Mall	http://www.siemens.com/industrial-controls/mall
• to website: Selector SIMATIC NET SELECTION TOOL	http://www.siemens.com/snst
• to website: Industrial communication	http://www.siemens.com/simatic-net
• to website: Information and Download Center	http://www.siemens.com/automation/net/catalog
• to website: Image database	http://automation.siemens.com/bilddb
• to website: CAx Download Manager	http://www.siemens.com/cax
• to website: Industry Online Support	http://support.automation.siemens.com
Security Information	

subject to modifications
© Copyright Siemens AG 2014

• Broadcast/Multicast/Unicast Limiter	Yes
• broadcast blocking	Yes
Protocol / is supported / SSH	Yes
Product functions / Time	
Product function / SICLOCK support	Yes
Protocol / is supported	
• NTP	Yes
• SNTP	Yes
Standards, specifications, approvals	
Standard	
• for EMC / from FM	FM3611: Class 1, Division 2, Group A, B, C, D / T4, Class 1, Zone 2, Group IIC, T4
• for hazardous zone	EN 60079-0: 2009, EN60079-15: 2010, II 3 G Ex nA IIC T4 Gc, KEMA 07 ATEX 0145 X
• for safety / of CSA and UL	UL 60950-1, CSA C22.2 No. 60950-1-03
• for hazardous area / of CSA and UL	ISA 12.12.01-2012 (Hazardous Location), Class 1 / Division 2 / Group A, B, C, D / T4, Class 1 / Zone 2 / Group IIC / T4
• for emitted interference	EN 61000-6-4 (Class A)
• for interference immunity	EN 61000-6-2
Verification of suitability	EN 61000-6-2, EN 61000-6-4
• CE mark	Yes
• C-Tick	Yes
• KC approval	No
Further information / Internet Links	
Internet-Link	
• to website: Industry Mall	http://www.siemens.com/industrial-controls/mall
• to website: Selector SIMATIC NET SELECTION TOOL	http://www.siemens.com/snst
• to website: Industrial communication	http://www.siemens.com/simatic-net
• to website: Information and Download Center	http://www.siemens.com/automation/net/catalog
• to website: Image database	http://automation.siemens.com/bilddb
• to website: CAx Download Manager	http://www.siemens.com/cax
• to website: Industry Online Support	http://support.automation.siemens.com
Security information	

subject to modifications
© Copyright Siemens AG 2014

Security information	Siemens provides products and solutions with industrial security functions that support the secure operation of plants, solutions, machines, equipment and/or networks. They are important components in a holistic industrial security concept. With this in mind, Siemens' products and solutions undergo continuous development. Siemens recommends strongly that you regularly check for product updates. For the secure operation of Siemens products and solutions, it is necessary to take suitable preventive action (e.g. cell protection concept) and integrate each component into a holistic, state-of-the-art industrial security concept. Third-party products that may be in use should also be considered. For more information about industrial security, visit http://www.siemens.com/industrialsecurity. To stay informed about product updates as they occur, sign up for a product-specific newsletter. For more information, visit http://support.automation.siemens.com. (V3.4)
letzte Änderung:	Aug 9, 2014

subject to modifications
© Copyright Siemens AG 2014

SIEMENS

Product data sheet 6GK5992-2AS00-8AA0

Product-type designation	MM992-2SFP
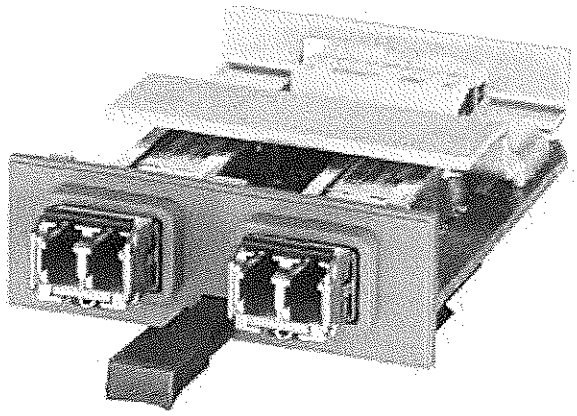	SCALANCE X ACCESSORY; MEDIA MODULE MM992-2SFP; 2 X 100/1000MBIT/S FOR SFP PLUG TRANSCEIVER
Interfaces	
Number of electrical/optical connections / for network components or terminal equipment / maximum	2
Number of electrical connections	
• for SFP+/SFP	2
Permitted ambient conditions	
Ambient temperature	
• during operating	-40 ... +70 °C
• during storage	-40 ... +70 °C
• during transport	-40 ... +70 °C
Relative humidity / at 25 °C / without condensation / during operating / maximum	95 %
Protection class IP	IP20
Design, dimensions and weight	
Design	Media module
Width	60 mm
Height	22 mm
Depth	100 mm
Net weight	0.08 kg
Mounting type	

subject to modifications
© Copyright Siemens AG 2014

• Installation in media module slot	Yes
Mounting type	Latched
Standards, specifications, approvals	
Standard	
• for EMC / from FM	FM3611: Class 1, Divison 2, Group A, B, C, D / T4, Class 1, Zone 2, Group IIC, T4
• for hazardous zone	EN 60079-0: 2006, EN60079-15: 2005, II 3 G Ex nA II T4, KEMA 07 ATEX 0145 X
• for safety / of CSA and UL	UL 60950-1, CSA C22.2 No. 60950-1
• for hazardous area / of CSA and UL	UL 1604 and UL 2279-15 (Hazardous Location), CSA C22.2 No. 213 -M1987, Class 1 / Division 2 / Group A, B, C, D / T4, Class 1 / Zone 2 / Group IIC / T4
• for emitted interference	EN 61000-6-4:2007 (Class A)
• for interference immunity	EN 61000-6-2:2005
Verification of suitability	EN 61000-6-2:2005, EN 61000-6-4:2007
• CE mark	Yes
• C-Tick	Yes
• KC approval	Yes
Further Information / Internet Links	
Internet-Link	
• to website: Industry Mall	http://www.siemens.com/industrial-controls/mall
• to website: Selector SIMATIC NET SELECTION TOOL	http://www.siemens.com/snst
• to website: Industrial communication	http://www.siemens.com/simatic-net
• to website: Information and Download Center	http://www.siemens.com/automation/net/catalog
• to website: Image database	http://automation.siemens.com/bilddb
• to website: CAx Download Manager	http://www.siemens.com/cax
• to website: Industry Online Support	http://support.automation.siemens.com
letzte Änderung:	May 19, 2014

subject to modifications
© Copyright Siemens AG 2014

SIEMENS

Product data sheet 6GK5992-1AL00-8AA0

Product type designation	SFP992-1
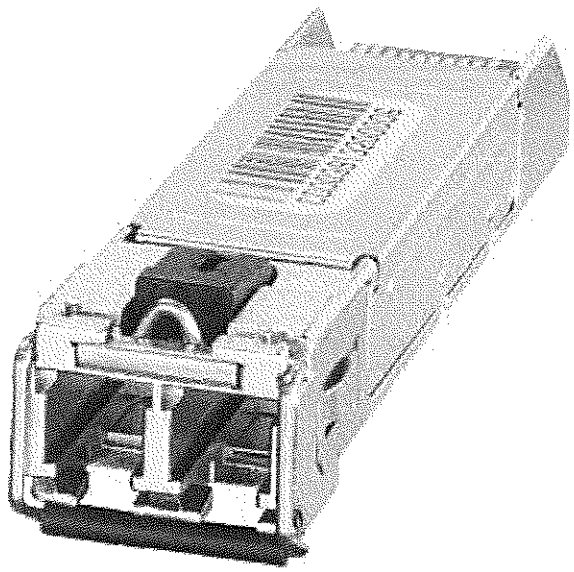	SCALANCE X ACCESSORY, SFP992-1 1 X 1000MBIT/S LC-PORT, OPTICAL; MULTIMODE GLASS UP TO MAX. 750 M

Interfaces	
Number of electrical/optical connections / for network components or terminal equipment / maximum	1
Number of 1000 Mbit/s LC ports (SX)	1
Design of optical connections / for network components or terminal devices	LC
Connectable optical power relative to 1 mW	
• of the transmitter output	-9.5 ... -4 dB
• of the receiver input / maximum	-3 dB
Optical sensitivity relative to 1 mW / of the receiver input / minimum	-17 dB
Attenuation / of fiber-optic cable transmission link / minimum necessary	0 dB
Range / at the optical interface / depending on the optical fiber used	0 ... 0.75 km

Permitted ambient conditions	
Ambient temperature	
• during operating	-40 ... +85 °C
• during storage	-40 ... +85 °C
• during transport	-40 ... +85 °C
Relative humidity / at 25 °C / without condensation / during operating / maximum	95 %
Protection class IP	IP20

subject to modifications
© Copyright Siemens AG 2014

Design, dimensions and weight	
Design	SFP Module
Width	13.7 mm
Height	11.9 mm
Depth	56.5 mm
Net weight	0.01 kg
Mounting type	Latched

Standards, specifications, approvals	
Standard	
• for EMC / from FM	FM3611: Class 1, Divison 2, Group A, B, C, D / T4, Class 1, Zone 2, Group IIC, T4
• for hazardous zone	EN 60079-0: 2006, EN60079-15: 2005, II 3 G Ex nA II T4, KEMA 07 ATEX 0145 X
• for safety / of CSA and UL	UL 60950-1, CSA C22.2 No. 60950-1-03
• for emitted interference	EN 61000-6-4:2007 (Class A)
• for interference immunity	EN 61000-6-2:2005
Verification of suitability	EN 61000-6-2:2005, EN 61000-6-4:2007
• CE mark	Yes
• C-Tick	Yes
• KC approval	No

Further Information / Internet Links	
Internet-Link	
• to website: Industry Mall	http://www.siemens.com/industrial-controls/mall
• to website: Selector SIMATIC NET SELECTION TOOL	http://www.siemens.com/snst
• to website: Industrial communication	http://www.siemens.com/simatic-net
• to website: Information and Download Center	http://www.siemens.com/automation/net/catalog
• to website: Image database	http://automation.siemens.com/bilddb
• to website: CAx Download Manager	http://www.siemens.com/cax
• to website: Industry Online Support	http://support.automation.siemens.com

letzte Änderung:	May 19, 2014

subject to modifications
© Copyright Siemens AG 2014

Chapter 3.13

Technical Literature -

Modbus Communication Processor

SIEMENS

Product data sheet 6ES7341-1CH02-0AE0

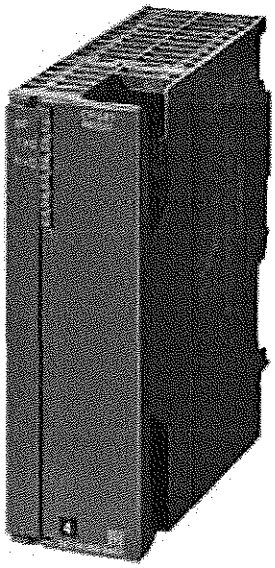

SIMATIC S7-300,
CP341 COMMUNICATION PROCESSOR WITH RS422/485 INTERFACE INCL. CONFIG. PACKAGE ON CD

-

Supply voltage	
24 V DC	Yes
Input current	
from backplane bus 5 V DC, max.	70 mA
from supply voltage L+, max.	100 mA
Power loss	
Power loss, typ.	1.6 W
Power loss, max.	2.4 W
Interfaces	
Number of interfaces	1 ; Isolated
Interface physics, RS 422/RS 485 (X.27)	Yes
Transmission rate, max.	115.2 kbit/s
Transmission rate, min.	0.3 kbit/s
Point-to-point	
Cable length, max.	1200 m
supported printers	Serial printers
PtP	15-pin sub D socket
Integrated protocol driver	
3964 (R)	Yes ; not with RS 485

subject to modifications
© Copyright Siemens AG 2014

ASCII	Yes
RK512	Yes ; not with RS 485
Telegram length, max.	
3964 (R)	4096 byte
ASCII	4096 byte
RK 512	4096 byte
Transmission rate, RS 422/485	
with 3964 (R) protocol, max.	115.2 kbit/s
with ASCII protocol, max.	115.2 kbit/s
with printer driver, max.	115.2 kbit/s
with RK 512 protocol, max.	115.2 kbit/s
Ambient conditions	
Operating temperature	
min.	0 °C
max.	60 °C
Software	
Block	
FB length in RAM, max.	6100 byte ; Data communication, sending and receiving
Connection method	
Power supply	3 screw-type terminals: L+, M, GND
Dimensions	
Width	40 mm
Height	125 mm
Depth	120 mm
Weights	
Weight, approx.	300 g
Status	Jul 7, 2014

subject to modifications
© Copyright Siemens AG 2014